SDS TOYOTA **Land Cruiser** (Hardtop & Canvas Top) **Diesel**

LJ 70, 72, 73, 77, 79
PZJ 70, 73, 75
HZJ 70, 73, 75

Aug. '92

		2L-T	3L	1PZ	1HZ
cm³ or CC (cu. in.)		2446 (149.3)	2779 (169.6)	3470 (211.7)	4164 (254.1)
mm (in.)		10 – 14 (0.39 – 0.55)		8 – 11 (0.31 – 0.43)	
		17 – 21 (0.67 – 0.83)		16 – 22 (0.63 – 0.87)	
		10 – 14 (0.39 – 0.55)		———	
		Continue			
secs	Bangladesh Europe Australia	1.6 (Austria)	2.8	2.4 (12V)	1.4 (24V)
	General	2.8 (Others)		6.0 (12V)	5.0 (24V)
mm (in.)		0.54 – 0.66 (0.0213 – 0.0260) ※	0.84 – 0.96 (0.0331 – 0.0378)	0.82 – 0.88 (0.0323 – 0.0346)	1.03 – 1.09 (0.0406 – 0.0429)
		○	×	×	×
kPa (kgf/cm², psi)		14220 – 15200 (145 – 155, 2062 – 2204)		13239 – 15200 (135 – 155, 1920 – 2204)	
		14808 – 15593 (151 – 159, 2147 – 2261)		14220 – 15200 (145 – 155, 2062 – 2204)	
mm (in.)		0.20 – 0.30 (0.008 – 0.012)		0.15 – 0.25 (0.006 – 0.010)	
		0.40 – 0.50 (0.016 – 0.020)		0.35 – 0.45 (0.014 – 0.018)	

Printed in Japan C ※(Austria) Check that the punch mark of the belt case is aligned with the pump flange.

		750	700	650	
rpm		———	———	———	———
		4800	4400 (Hong Kong, Singapore, Malaysia) 4600 (Others)	4600	
kPa (kgf/cm², psi)		3040 (31.0, 441)	3138 (32.0, 455)	3628 (37.0, 526)	
		⬆1961 (20.0, 284)		⬆2648 (27.0, 384)	
		⬇490 (5.0, 71)			
N·m (kgf-cm, ft-lbf)	A	① 78 (800, 58) ② 90° ③ 90°		① 69 (700, 51) ② 90° ③ 90°	
	B	24 (240, 17)		20 (200, 14)	
	C	52 (530, 38)		39 (400, 29)	
	D	64 (650, 47)			
	E	29 (300, 22)			
kPa (kgf/cm², psi)		⬆29 (0.3, 4.3)			
	3,000 rpm	294 – 539 (3.0 – 5.5, 43 – 78)		⬆245 (2.5, 36)	

	2L-T	3L	1PZ	1HZ
liter (US qts, Imp. qts)	5.7 (6.0, 5.0)		7.7 (8.1, 6.8)	8.2 (8.7, 7.2)
	6.7 (7.1, 5.9)		9.0 (9.5, 7.9)	9.5 (10.0, 8.4)
	API CD or better	API CC, CD or better	Europe API CD or better Others API CC, CD or better	
liter (US qts, Imp. qts)	w/Front Heater		w/o Heater	
	10.9 (11.5, 9.6)		9.6 (10.1, 8.4)	9.9 (10.5, 8.7)
	w/Front and Rear Heater		w/Front Heater	
	11.5 (12.2, 10.1)		10.3 (10.9, 9.1)	10.6 (11.2, 9.3)
			w/Front and Rear Heater	
			11.3 (11.9, 9.9)	11.6 (12.3, 10.2)

TOYOTA MOTOR CORPORATION Pub. No. SDS232E

Land Cruiser Diesel

(Hardtop & Canvas Top)

LJ 70-9057151~, 9502338~ LJ 72-0003099~ LJ 73-9019205~ LJ 77-0001490~, 8000367~
LJ 79-0005481~ PZJ 70-0004684~ PZJ 73 PJZ 75-0004998~, 8000566~, 8500916~
HZJ 70-8000149~, 7000040~ HZJ 73-0003636~, 8000630~ HZJ 75-0009147~, 8003091~, 8510163~

TOYOTA QUALITY SERVICE

		LJ	PZJ	HZJ
A		181 (7.13)		
B		13.0–23.0 (0.51–0.91)		
B		—	15.0–30.0 (0.59–1.18)	
C		↑25 (0.98)		
mm (in.)		SAE J1703 FMVSS No.116 DOT3		

		LJ	PZJ	HZJ
A		161–171 (6.34–6.73)		
B		3–6 (0.12–0.24)		
C		↑68 (2.68)		
mm (in.)		SAE J1703 FMVSS No.116 DOT3		
196N (20kgf, 44lbf)		7–9		
A		↑4.0 (0.157) (Australia) ↑1.0 (0.039) (Others)	↑1.0 (0.039)	
B		↑18.0 (0.709)	↑16.0 (0.630)	
B		↑11.5 (0.453)	—	
mm (in.)		—	↑1.0 (0.039)	
mm (in.)		—	↑1.5 (0.059) (PZJ, HZJ) ↑1.0 (0.039) (LJ)	
mm (in.)		—	↓211 (8.31)	
mm (in.)		—	↓297.0 (11.693) (PZJ, HZJ) ↓256.0 (10.079) (LJ)	

	LJ	PZJ	HZJ
N (kgf, lbf)	27–56 (2.8–5.7 / 6.2–12.6)	25–56 (2.6–5.7 / 5.7–12.6)	
N·m (kgf-cm, ft-lbf)	157 (1600 / 116)		

	LJ	PZJ	HZJ
liter (US qts, Imp. qts)	2.8 (3.0, 2.5)	3.2 (3.4, 2.8)	—
	2.6 (2.7, 2.3) (G52) 3.0 (3.2, 2.6) (R150F)	3.0 (3.2, 2.6)	4.9 (5.2, 4.3)
	API GL-4 or GL-5 SAE 75W-90 (LJ / PZJ) SAE90 (HZJ)		
liter (US qts, Imp. qts)	—		
	—		
liter (US qts, Imp. qts)	2.1 (2.2, 1.8)	2.2 (2.3, 1.9)	2.2 (2.3, 1.9)
w/PTO	2.6 (2.7, 2.2)	2.7 (2.8, 2.3)	2.7 (2.8, 2.3)
	API GL-4 or GL-5 SAE 90		
liter (US qts, Imp. qts)	1.98 (2.1 / 1.7) 1.85 (2.0 / 1.6)	2.6 (2.7, 2.3)	2.5 (2.6, 2.2)
	API GL-5 With LSD use LSD oil only SAE 90 (↑ −18°C (0°F)) SAE 80W, 80W-90 (↓ −18°C (0°F))		

	LJ·PZJ·HZJ
mm (in.)	↓40 (1.57)

		LJ	PZJ, HZJ 70, 73	PZJ, HZJ 75L(R) V	PZJ, HZJ 75L(R) P
A		1°±45′			
B		12°±45′			
C		4°00′ ±1°	3°15′ ±1°	2°50′ ±1°	2°30′ ±1°
D		32° +0° −3°			
E		21°	22°		
F+G		−0.1°±0.2° (31×10.50R15-6PRLT / 265/75R15) 0.1°±0.2° (Others)			
F+G		0.4°±0.2°			
H−I		−1±2 (−0.04±0.08) (31×10.50R15-6PRLT / 265/75R15) 1±2 (0.04±0.08) (Others)			
H−I mm (in.)		4±2 (0.16±0.08)			

Australia kPa (kgf/cm², psi)	HZJ70	7.50R16-6	200 (2.0, 28)	350 (3.5, 51)	240 (2.4, 34)	350 (3.5, 51)
		265/75R15 112S	180 (1.8, 26)	200 (2.0, 28)	180 (1.8, 26)	200 (2.0, 28)
	HZJ75	7.50R16-8PRLT	220 (2.2, 32)	390 (3.9, 55)	240 (2.4, 34)	420 (4.2, 60)
Europe kPa (kgf/cm², psi)	LJ70, 73	215/80R16 107S	160 (1.6, 23)	200 (2.0, 29)	180 (1.8, 26)	220 (2.2, 32)
		265/75R15 112S	180 (1.8, 26)	200 (2.0, 29)	180 (1.8, 26)	200 (2.0, 29)
	LJ77	215/80R16 107S	180 (1.8, 26)	260 (2.6, 38)	200 (2.0, 29)	280 (2.8, 41)
		265/75R15 112S	180 (1.8, 26)	200 (2.0, 29)	180 (1.8, 26)	200 (2.0, 29)
	HZJ70, 73	215/80R16 107S	180 (1.8, 26)	200 (2.0, 29)	200 (2.0, 29)	220 (2.2, 32)
		265/75R15 112S	180 (1.8, 26)	200 (2.0, 29)	180 (1.8, 26)	200 (2.0, 29)
	HZJ75	205R16C 8PR	220 (2.2, 32)	450 (4.5, 65)	250 (2.5, 36)	450 (4.5, 65)
General kPa (kgf/cm², psi)	PZJ70, 73	7.50-16-6PRLT	180 (1.8, 26)	200 (2.0, 29)	180 (1.8, 26)	240 (2.4, 35)
		7.00R15-6PRLT	200 (2.0, 29)	275 (2.75, 40)	225 (2.25, 33)	300 (3.0, 44)
		7.50R16-6PRLT	200 (2.0, 29)	225 (2.25, 33)	225 (2.25, 33)	250 (2.5, 36)
		7.50R16-8PRLT	200 (2.0, 29)	225 (2.25, 33)	225 (2.25, 33)	250 (2.5, 36)
		31×10.50R15-6PRLT	180 (1.8, 26)	250 (2.5, 36)	210 (2.1, 30)	280 (2.8, 41)
	HZJ PZJ75	7.50-16-8PRLT	240 (2.4, 35)	350 (3.5, 51)	280 (2.8, 41)	400 (4.0, 58)
		7.50R16-6PRLT(FR)	225 (2.25, 33)	—	250 (2.5, 36)	—
		7.50R16-8PRLT(RR)	—	375 (3.75, 54)	—	400 (4.0, 58)
		7.50R16-6PRLT	225 (2.25, 33)	350 (3.5, 51)	250 (2.5, 36)	375 (3.75, 54)
		7.50R16-8PRLT	225 (2.25, 33)	375 (3.75, 54)	250 (2.5, 36)	400 (4.0, 58)
		235/95RC 116N	180 (1.8, 26)	220 (2.2, 32)	180 (1.8, 26)	280 (2.8, 41)
	LJ72	7.50-16-6PRLT	180 (1.8, 26)	180 (1.8, 26)	180 (1.8, 26)	220 (2.2, 32)
		7.00R15-6PRLT	200 (2.0, 29)	275 (2.75, 40)	225 (2.25, 33)	300 (3.0, 44)
		7.50R16-6PRLT	200 (2.0, 29)	225 (2.25, 33)	225 (2.25, 33)	250 (2.5, 36)
		205R16C 6PR	170 (1.7, 25)	200 (2.0, 29)	170 (1.7, 25)	240 (2.4, 35)
		31×10.50R15-6PRLT	180 (1.8, 26)	210 (2.1, 30)	180 (1.8, 26)	250 (2.5, 36)
	LJ77, 79	7.50-16-6PRLT	180 (1.8, 26)	260 (2.6, 38)	180 (1.8, 26)	300 (3.0, 44)
		7.50R16-6PRLT	225 (2.25, 33)	350 (3.5, 51)	250 (2.5, 36)	375 (3.75, 54)
		205R16C 6PR	200 (2.0, 29)	320 (3.2, 46)	200 (2.0, 29)	360 (3.6, 52)
		31×10.50R15-6PRLT	190 (1.9, 28)	280 (2.8, 41)	190 (1.9, 28)	300 (3.0, 44)

©1992 TOYOTA MOTOR CORPORATION

Overseas Service Division : 01-920917-00

HOW TO USE THIS MANUAL

To assist you in finding your way through this manual, the Section Title and major heading are given at the top of every page.

An **INDEX** is provided on the 1st page of each section to guide you to the item to be repaired.

At the beginning of each section, **PRECAUTIONS** are given that pertain to *all* repair operations contained in that section.

Read these precautions before starting any repair task.

TROUBLESHOOTING tables are included for each system to help you diagnose the problem and find the cause. The repair for each possible cause is referenced in the remedy column to quickly lead you to the solution.

REPAIR PROCEDURES

Most repair operations begin with an overview illustration. It identifies the components and shows how the parts fit together.

Example:

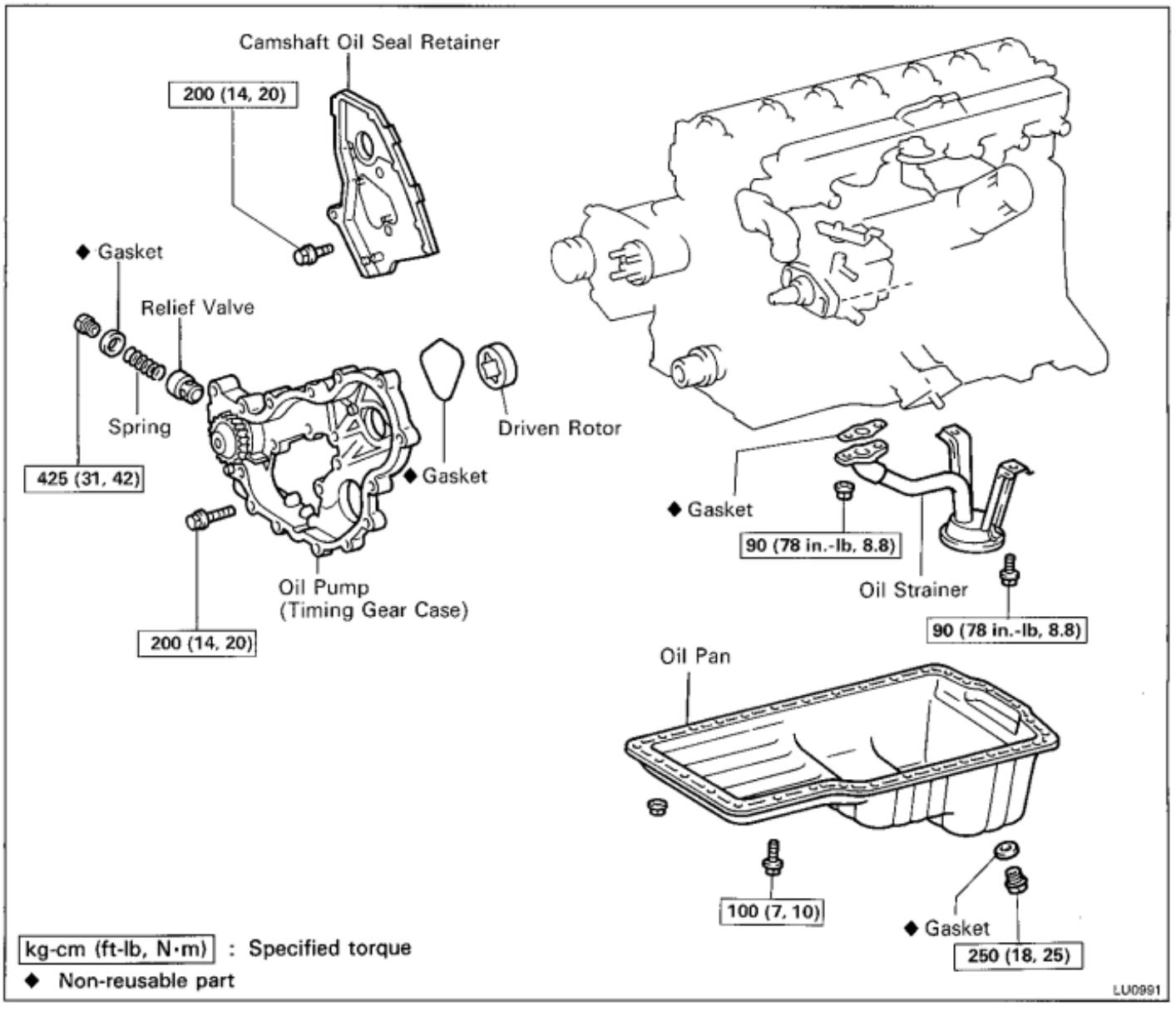

The procedures are presented in a step-by-step format:

- The illustration shows *what* to do and *where* to do it.
- The task heading tells *what* to do.
- The detailed text tells *how* to perform the task and gives other information such as specifications and warnings.

Example:

Task heading: what to do

Detailed text: how to do task

13. INSTALL GOVERNOR LINK

(a) Using SST, install the governor link with new two gaskets and the two support bolts.

Torque: 140 kg-cm (10 ft-lb, 14 N·m)

SST 09260-54012 (09269-54040)

Specification

Set part No. *Component part No.*

Illustration: what to do and where

This format provides the experienced technician with a FAST TRACK to the information needed. The upper case task heading can be read at a glance when necessary, and the text below it provides detailed information. Important specifications and warnings always stand out in bold type.

REFERENCES

References have been kept to a minimum. However, when they are required, you are given the page to refer to.

SPECIFICATIONS

Specifications are presented in bold type throughout the text where needed. You never have to leave the procedure to look up your specifications. They are also found in Appendix A for quick reference.

CAUTIONS, NOTICES, HINTS:

- CAUTIONS are presented in bold type, and indicate there is a possibility of injury to you or other people.
- NOTICES are also presented in bold type, and indicate the possibility of damage to the components being repaired.
- HINTS are separated from the text but do not appear in bold. They provide additional information to help you efficiently perform the repair.

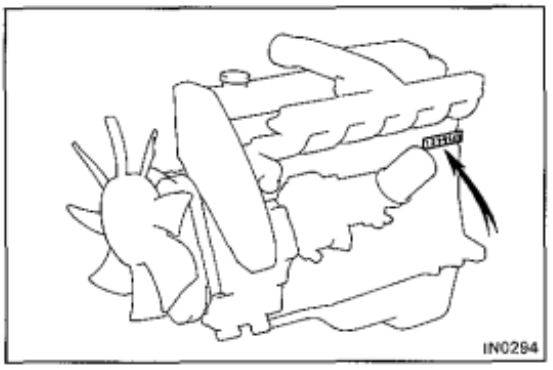

IDENTIFICATION INFORMATION

ENGINE SERIAL NUMBER

The engine serial number is stamped on the left side of the cylinder block.

GENERAL REPAIR INSTRUCTIONS

1. Use fender, seat and floor covers to keep the vehicle clean and prevent damage.
2. During disassembly, keep parts in order to facilitate reassembly.
3. Observe the following:
   (a) Before performing electrical work, disconnect the negative (−) cable from the battery terminal.
   (b) If it is necessary to disconnect the battery for inspection or repair, always disconnect the cable from the negative (−) terminal which is grounded to the vehicle body.
   (c) To prevent damage to the battery terminal post, loosen the terminal nut and raise the cable straight up without twisting or prying it.
   (d) Clean the battery terminal posts and cable terminals with a shop rag. Do not scrape them with a file or other abrasive object.
   (e) Install the cable terminal to the battery post with the nut loose, and tighten the nut after installation. Do not use a hammer to tap the terminal onto the post.
   (f) Be sure the cover for the positive (+) terminal is properly in place.
4. Check hose and wiring connectors to make sure that they are secure and correct.
5. Non-reusable parts
   (a) Always replace cotter pins gaskets, O-rings, oil seals, etc. with new ones.
   (b) Non-reusable parts are indicated in the component illustrations by the "◆" symbol.

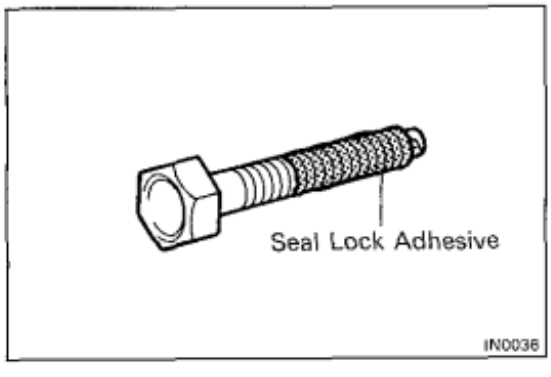

6. Precoated Parts

   Precoated parts are bolts and nuts, etc. that are coated with a seal lock adhesive at the factory.
   (a) If a precoated part is retightened, loosened or caused to move in any way, it must be recoated with the specified adhesive.

(b) Recoating of Precoated Parts

(1) Clean off the old adhesive from the part's threads.

(2) Dry with compressed air.

(3) Apply the specified seal lock adhesive to the part's threads.

(c) Precoated parts are indicated in the component illustrations by the "★" symbol.

7. When necessary, use a sealer on gaskets to prevent leaks.
8. Carefully observe all specifications for bolt torques. Always use a torque wrench.
9. Use of special service tools (SST) and special service materials (SSM) may be required, depending on the nature of the repair. Be sure to use SST and SSM where specified and follow the proper work procedure. A list of SST and SSM can be found at the back of this manual.
10. When replacing fuses, be sure the new fuse is the correct amperage. DO NOT exceed the rating or use one of a lower rating.
11. Care must be taken when jacking up and supporting the vehicle. Be sure to lift and support the vehicle at the proper locations.

(a) If the vehicle is to be jacked up only at the front or rear end, be sure to block the wheels in order to ensure safety.

(b) After the vehicle is jacked up, be sure to support it on stands. It is extremely dangerous to do any work on the vehicle raised on a jack alone, even for a small job that can be finished quickly.

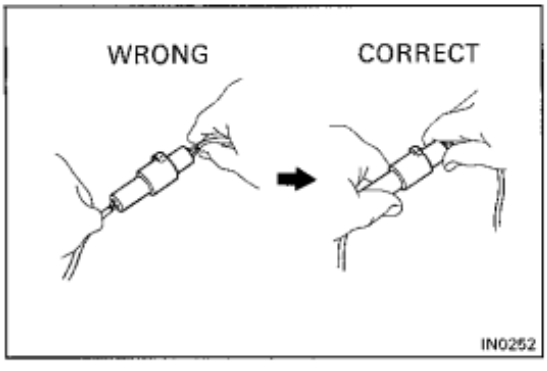

12. Observe the following precautions to avoid damaging the parts:

(a) Be careful not to drop electrical components, such as sensors or relays. If they are dropped on a hard floor, they should be replaced and not reused.

(b) To pull apart electrical connectors, pull on the connector itself, not the wires.

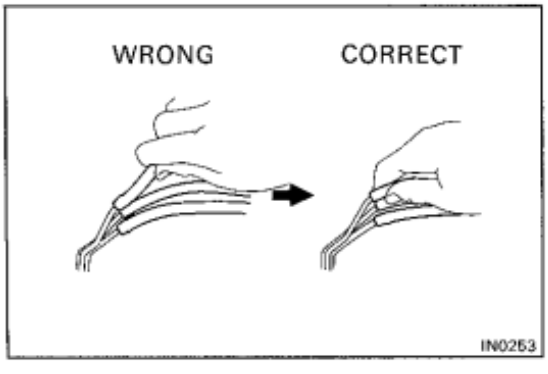

(c) To disconnect vacuum hoses, pull on the end, not the middle of the hose.

(d) When steam cleaning an engine, protect the air filter, and injection pump from water.

(e) Never use an impact wrench to remove or install temp. switches or temp. sensors.

(f) When checking continuity at the wire connector, insert the tester probe carefully to prevent terminals from bending.

(g) When using a vacuum gauge, never force the hose onto a connector that is too large. Use a step-down adapter instead. Once the hose has been stretched, it may leak.

13. After removing and reinstalling the injection pump and fuel hoses, clean off the fuel on engine components. In particular, be sure to check the radiator hose and by-pass hose, because they deteriorate easily if they come into contact with fuel.

ABBREVIATIONS USED IN THIS MANUAL

A/C	Air Conditioner
ACV	Air Control Valve
ACSD	Automatic Cold Start Device
Approx.	Approximately
A/T	Automatic Transmission
BACS	Boost and Altitude Compensation Stopper
BDC	Bottom Dead Center
Ex.	Except
FL	Fusible Link
FIPG	Formed in Place Gasket
HAC	High Altitude Compensator
LH	Left-Hand
LHD	Left-Hand Drive
LST	Load Sensing Timer
MP	Multipurpose
M/T	Manual Transmission
OHC	Over Head Cam
O/S	Oversized
PCS	Power Control System
PCV	Positive Crankcase Ventilation
RH	Right-Hand
RHD	Right-Hand Drive
SSM	Special Service Materials
SST	Special Service Tools
STD	Standard
SW	Switch
TDC	Top Dead Center
U/S	Undersize
w/	With
w/o	Without

ENGINE MECHANICAL

	Page
DESCRIPTION	EM-2
TROUBLESHOOTING	EM-4
Diesel Engine Diagnosis	EM-4
Diesel Electrical System Diagnosis	EM-14
ENGINETUNE-UP	EM-17
COMPRESSION CHECK	EM-30
TIMING BELT	EM-32
TIMINGGEARS	EM-42
CYLINDER HEAD	EM-54
CYLINDER BLOCK	EM-84

DESCRIPTION

The 1 PZ engine is an in-line 5-cylinder 3.5 liter OHC engine.
The 1 HZ and 1 HD-T engines are an in-line 6-cylinder 4.2 liter OHC engine.

1PZ

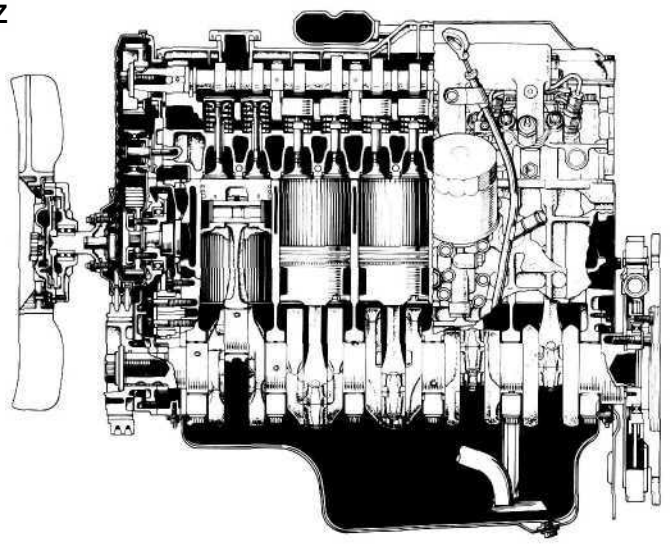

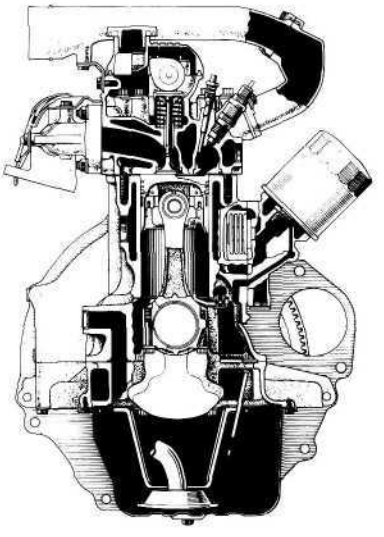

1HZ

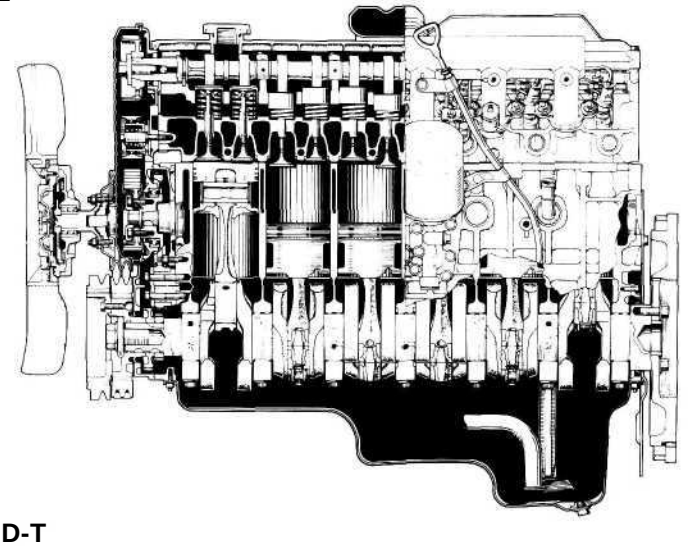

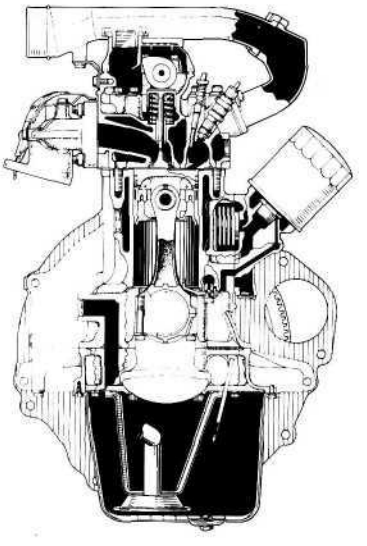

1HD-T

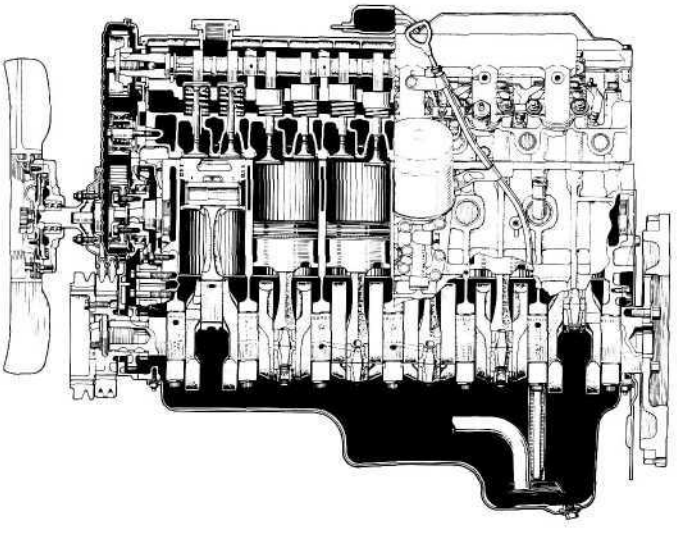

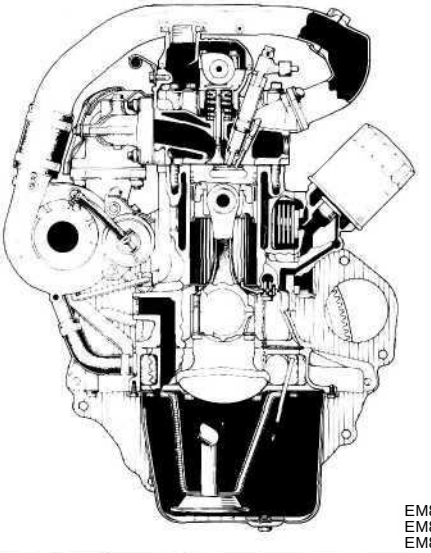

EM8795 EM8792
EM8965 EM8793
EM8966 EM8794

The 1 PZ engine is an in-line 5-cylinder engine with the cylinders numbered 1 - 2 - 3 - 4 - 5 from the front. This engine's injection order is 1 - 2 - 4 - 5 - 3 .

The 1 HZ and 1HD-T engines are an in-line 6-cylinder engine with the cylinders numbered 1 - 2 - 3 - 4 - 5 - 6 from the front. This engine's injection order is 1 - 4 - 2 - 6 - 3 - 5 .

The crankshaft is supported by 6 (1 PZ) or 7 (1 HZ and 1HD-T) bearings on the inside of the crankcase. These bearings are made of aluminum alloy. The crankshaft is integrated with 10 weights (1 PZ) or 12 weights (1 HZ and 1HD-T) which are cast along with it for balancing. Oil holes are built into the crankshaft for supplying oil to the connecting rods, bearings and other components.

The crankshaft bearing cap is of ladder frame construction and is incorporated into the crank case.

The cylinder head is made of cast iron with a cross flow type intake and exhaust layout. The combustion chambers are swirl chamber type for the 1 PZ and 1 HZ engines and direct injection type for the 1 H D-T engine. The camshaft journal part of the cylinder head has camshaft caps made of aluminum alloy and is made of cast iron on the cylinder head side. The camshaft journal has no bearings (with the exception of the No.1 journal).

The 1 HZ and 1 HD-T engines has dual-type exhaust manifolds.

Exhaust and intake valves are equipped with irregular pitch springs which are capable of following the valves even at high engine speeds.

The camshaft is driven by the timing belt. The camshaft journal is supported at 6 places (1 PZ) or 7 places (1 HZ and 1HD-T). Lubrication of the camshaft journal and cam is accomplished by oil being supplied through the oiler port in the No.6 (1 PZ) or No.7 (1 HZ and 1 HD-T) of the camshaft journal.

Adjustment of the valve clearance is done by means of an outer shim type system, in which valve adjusting shims are located above the valve lifters. This permits replacement of the shims without removal of the camshaft.

Pistons are made of highly temperature-resistant aluminum alloy. As the 1 HD-T engine is the direct injection type, a deep combustion chamber has been provided. The No.1 piston ring groove has been strengthened using a fiber reinforced metal.

Piston pins are the full-floating type, with the pins fastened to neither the connecting rods nor the piston boss, but with a snap rings fitted to both ends of the pin to prevent the pin from slipping out.

The No.1 compression ring is made of steel and the No.2 compression ring is made of cast iron. The oil ring is made of steel. The outer diameter of each piston ring is slightly larger than the diameter of the piston and the flexibility of the rings allows them to hug the cylinder walls when they are mounted on the piston. Compression rings No.1 and No.2 work to prevent the leakage of gas from the cylinder and the oil ring works to scrape oil off the cylinder walls to prevent it from entering the combustion chamber.

The cylinder block is made of cast iron. It has 5 cylinders (1 PZ) or 6 cylinders (1HZ and 1HD-T) which are approximately 1.7 times the length of the piston stroke. The top of the cylinders is closed off by the cylinder head and the lower end of the cylinders becomes the crankcase, in which the crankshaft is installed. In addition, the cylinder block contains a water jacket, through which coolant is pumped to cool the cylinders.

Plastic region tightening bolts are used for the cylinder head bolts, crankshaft bearing cap bolts and connecting rod cap bolts.

The oil pan is bolted onto the bottom of the crankshaft bearing cap with bolts and nuts. The oil pan is an oil reservoir made of pressed steel sheet.

TROUBLESHOOTING

Diesel Engine Diagnosis

GENERAL

1. Diesel engine problems are usually caused by the engine or fuel system. The injection pump is very rarely the cause of fuel system problems.
2. Before beginning fuel system tests, first check that the engine compression, valve timing and other major systems are within specifications.

PRELIMINARY CHECKS

1. Before performing fuel system checks, ensure that the engine is in good running condition. If necessary, first check the compression, timing and major components or systems.
2. Check the air filter, and clean or replace it if necessary.
3. Check that there is sufficient fuel in the tank.
4. Check if the fuel is contaminated with gasoline or other foreign elements. Only good-quality diesel fuel should be used.
5. Bleed air from the system by pumping the priming.
6. Check for water in the fuel filter and fuel tank, and drain as necessary.
7. If the engine will not crank or if it cranks slowly, first troubleshoot the electrical system.

PRECAUTION:

1. **The basic troubleshooting procedures for the diesel engine (valve clearance, compression, bearings, valves, pistons, etc.) are the same checks you would make for gasoline engine.**
2. **Repair of the injection pump requires considerable skill and use of a special test bench.**

ENGINE WILL NOT CRANK

(Possible Cause)	(Check Procedure and Correction Method)
1. LOOSE OR CORRODED BATTERY CABLES	Check cables from battery to starter and make necessary repairs.
2. DISCHARGED BATTERY	Check alternator output and drive belt. If necessary, repair. (See page CH-5)
3. INOPERATIVE STARTER	Check for battery voltage at starter terminals 30 and 50. If Okay, see STARTING SYSTEM for repair procedure, (see page ST-15)

ENGINE CRANKS SLOWLY-WILL NOT START

HINT: Minimum cranking speed:

Cold	**HZJ80 (A/T) and HDJ80 (A/T)**	**110 rpm**
	Others	**100 rpm**
Hot		**150 rpm**

(Possible Cause)	(Check Procedure and Correction Method)
1. LOOSE OR CORRODED BATTERY CABLES	Check cables from battery to starter and make necessary repairs.
2. DISCHARGED BATTERY	Check alternator output and drive belt. If necessary, repair. (See page CH-5)
3. IMPROPER ENGINE OIL	Check engine oil. If improper viscosity, drain and refill with oil of viscosity recommended by manufacturer. (See page LU-6)

ENGINE CRANKS NORMALLY BUT WILL NOT START

(Possible Cause)	(Check Procedure and Correction Method)
1. NO FUEL TO NOZZLE	Loosen any one injection pipe union nut from its nozzle holder. Crank engine for about 5 seconds while confirming that fuel is being discharged from pipe. If fuel is coming out, begin diagnosis from item 4. If not, begin from item 2.
2. NO FUEL CUT SOLENOID OPERATION	With starter switch turned ON, check for fuel cut solenoid operation noise (clicking sound) while repeatedly connecting and disconnecting fuel cut solenoid. If no noise, check if there is battery voltage to solenoid when starter switch is ON. If battery voltage is confirmed, fuel cut solenoid is faulty and should be replaced. If no voltage, refer to ELECTRICAL DIAGNOSIS and make necessary repairs.
3. NO FUEL INTO INJECTION PUMP	Disconnect inlet hoses from fuel filter, and feed clean fuel from separate container directly into fuel pump. HINT: When feeding fuel tank directly into pump, keep container at same level as vehicle fuel tank. If engine starts, either fuel filter or line between fuel tank and filter is clogged and should be repaired accordingly. If engine still does not start (no fuel intake), check fuel line between filter and pump. If normal, pump is faulty and should be replaced.
4. FUEL LEAKAGE FROM INJECTION PIPES	Check for loose unions or cracks. If leaking, tighten to standard torque or, if necessary, replace pipe(s).
5. INOPERATIVE PREHEATING OPERATION	With starter switch turned ON and glow plug indicator light illuminated, check that there is voltage applied to glow plug. If not, refer to ELECTRICAL DIAGNOSIS and repair as necessary.

6. FAULTY GLOW PLUG OPERATION

Check glow plug for continuity.

If no continuity, a broken wire is indicated and glow plug should be replaced.

7. IMPROPER INJECTION TIMING

Check injection timing. (See page EM-27)

Plunger stroke:

1PZ	**0.82—0.88 mm (0.0323-0.0346 in.)**
1HZ	**1.03-1.09 mm (0.0406-0.0429 in.)**
1HD-T	**1.29-1.35 mm (0.0508-0.0531 in.)**

If not as above, injection pump is improperly adjusted.

8. (w/ACSD) IMPROPER COLD START ADVANCE AND FAST IDLE

Check timer piston stroke and fast idle lever opening angle with an injection pump tester when cold start advance is operated.

9. FAULTY INJECTION NOZZLES

Check injection pressure with a nozzle tester. (See page FU-10 or 20)

Opening pressure:

1PZand1HZ **135-155 kg/cm^2 (1,920-2,205 psi) (13,239-15,200 kPa)**

1HD-T

No.1 opening pressure **180-190 kg/cm^2 (2,560-2,702 psi) (17,652 - 18,633 kPa)**

No.2 opening pressure (Inspection pressure) **132-138 kg/cm^2 (1,877-1,963 psi) (12,945-13,533 kPa)**

If not as above, nozzle adjustment is improper and pressure should be readjusted.

If pressure cannot be adjusted to specification, replace injection nozzle.

ROUGH IDLE WITH WARM ENGINE

(Possible Cause)	(Check Procedure and Correction Method)
1. IMPROPER ADJUSTMENT OF ACCELERATOR CABLE	With accelerator pedal released, check that adjusting lever is in contact with idle speed adjusting screw. Also check if accelerator cable or linkage is catching on something. If necessary, adjust so that lever is in contact with screw, or make other required repairs.
2. IDLE SPEED TOO LOW	Check idle speed. (See page EM-27) **Idle speed:** **1PZ 600-700 rpm** **1HZM/T 600-700 rpm** **1HZA/T 660-760 rpm** **1HD-T M/T 600-700 rpm** **1HD-T A/T 750 - 850 rpm** HINT: If less than standard, idling would normally be rough. If not as above, adjust with idle speed adjusting screw.
3. FUEL LEAKAGE	Check for leaks at injection pump connections, pump distributive head bolts, injection nozzles and delivery valve holders. Tighten any loose connections to specified torque or replace parts as necessary.
4. IMPROPER INJECTION TIMING	Refer to step 7 of ENGINE CRANKS NORMALLY BUT WILL NOT START, above.

5. IMPROPER OPERATION OF INJECTION NOZZLES OR DELIVERY VALVES

With engine idling, loosen injection pipe to each cylinder in order, and check if idle speed changes.

If no change, a faulty cylinder is indicated. Check according to following procedure.

- Faulty injection nozzle

Check injection nozzle with a nozzle tester. (See page FU-10 or 20)

Opening pressure:

IPZandiHZ **135-155 kg/cm^2 (1,920-2,205 psi) (13,239-15,200 kPa)**

1HD-T

No.1 opening pressure **180-190 kg/cm^2 (2,560-2,702 psi) (17,652 - 18,633 kPa)**

No.2 opening pressure (Inspection pressure) **132-138 kg/cm^2 (1,877-1,963 psi) (12,945-13,533 kPa)**

If not as above, nozzle adjustment is improper and pressure should be readjusted.

If pressure cannot be adjusted to specification, replace injection nozzle.

- Faulty delivery valve

If injection pressure is as specified, delivery vale is defective and should be replaced.

ENGINE SUDDENLY STOPS

(Possible Cause)	(Check Procedure and Correction Method)
1. ENGINE WILL NOT RE-START	Check to see if engine re-starts according to prescribed procedure. If not, refer to ENGINE CRANKS NORMALLY BUT WILL NOT START, above, and repair as necessary.
2. ROUGH IDLE	Refer to ROUGH IDLE WITH WARM ENGINE and repair accordingly.
3. MALFUNCTION OF FUEL CUT SOLENOID	Refer to ENGINE CRANKS NORMALLY BUT WILL NOT START, above, and check accordingly. HINT: No operation noise from fuel cut solenoid may be due to loose electrical connections, so check connectors before proceeding with further repairs.
4. NO FUEL INTO INJECTION PUMP	Refer to step 3 of ENGINE CRANKS NORMALLY BUT WILL NOT START, above.

LACK OF POWER

HINT:
- First check that the air cleaner is not clogged or the engine overheating.
- Not applicable if the customer desires an output power higher than specified for that vehicle. For accuracy, adjust with a chassis dynamo.

(Possible Cause)	(Check Procedure and Correction Method)
1. IMPROPER ADJUSTMENT OF ACCELERATOR CABLE	With accelerator fully depressed, check that adjusting lever is in contact with maximum speed adjusting screw. Also check if accelerator cable or linkage is catching on something. If necessary, adjust so that lever is in contact with screw, or make other required repairs.
2. INSUFFICIENT MAXIMUM SPEED	Check maximum speed. (See page EM-27) **Maximum speed:** **1 PZ and 1 HZ 4,500-4,700 rpm** **1HD-T 4,300-4,500 rpm** If not as above, adjust with maximum speed adjusting screw.

3. INTERCHANGED OVERFLOW SCREW (OUT) AND INLET (NO MARK) FITTING	HINT: Overflow screw is marked "OUT" and has an inner jet. Although both fittings are same size, they must not be interchanged.
4. FUEL LEAKAGE	Refer to step 3 of ROUGH IDLE WITH WARM ENGINE.
5. CLOGGED FUEL FILTER	Disconnect inlet hose to fuel filter, and feed clean fuel directly into pump. HINT: When feeding fuel directly into pump, keep container at same level as vehicle fuel tank. If engine condition improves, fuel filter is clogged and should be replaced. (See page FU-4) If no increase in engine condition after replacing fuel filter, check priming pump (hand pump) or perform other necessary repairs.
6. IMPROPER INJECTION TIMING	Refer to step 7 of ENGINE CRANKS NORMALLY BUT WILL NOT START.
7. FAULTY INJECTION NOZZLES	Refer to step 9 of ENGINE CRANKS NORMALLY BUT WILL NOT START.

EXCESSIVE EXHAUST SMOKE

HINT:
- Check that the air cleaner is not clogged.
- Check with the customer whether or not oil consumption has been excessive.

(Possible Cause)	(Check Procedure and Correction Method)
1. IMPROPER INJECTION TIMING	Refer to step 7 of ENGINE CRANKS NORMALLY BUT WILL NOT START. HINT: Black smoke indicates advanced timing while white smoke indicates retarded timing. Adjustments should be made accordingly.
2. CLOGGED FUEL FILTER	Refer to step 5 of LACK OF POWER. HINT: At high speed (2,000-3,000 rpm), a clogged filter tends to make exhaust smoke white.
3. FAULTY INJECTION NOZZLES	Refer to step 9 of ENGINE CRANKS NORMALLY BUT WILL NOT START. HINT: Excessive exhaust smoke is often caused by nozzle pressure being too low.

EXCESSIVE FUEL CONSUMPTION

HINT: Check whether clutch slipping, brakes grabbing, tires wrong size or air filter clogged.

(Possible Cause)	(Check Procedure and Correction Method)
1. FUEL LEAKAGE	Refer to step 3 of ROUGH IDLE WITH WARM ENGINE.
2. IDLE SPEED TOO HIGH	After sufficiently warming up engine, check idle speed. (See page EM-27) **Idle speed:** **1PZ 600-700 rpm** **1HZM/T 600-700 rpm** **1HZA/T 660-760 rpm** **1HD-T M/T 600-700 rpm** **1HD-T A/T 750 - 850 rpm** If not as above, adjust with idle speed adjusting screw.
3. MAXIMUM SPEED TOO HIGH	Check maximum speed. (See page EM-27) **Maximum speed:** **1PZ and 1 HZ 4,500 - 4,700 rpm** **1HD-T 4,300 - 4,500 rpm** If not as above, adjust with maximum speed adjusting screw.
4. IMPROPER INJECTION TIMING	Refer to step 7 of ENGINE CRANKS NORMALLY BUT WILL NOT START.
5. FAULTY INJECTION NOZZLES	Refer to step 9 of ENGINE CRANKS NORMALLY BUT WILL NOT START.

ENGINE NOISE WHEN WARM (Cranking Noise with Excessive Vibration)

(Possible Cause)	(Check Procedure and Correction Method)
1. ENGINE COOLANT TEMPERATURE TOO LOW	Check coolant temperature with coolant temperature gauge. If not sufficiently warm, thermostat is faulty and should be replaced.
2. IMPROPER INJECTION TIMING	Refer to step 7 of ENGINE CRANKS NORMALLY BUT WILL NOT START.
3. FAULTY INJECTION NOZZLES	Refer to step 9 of ENGINE CRANKS NORMALLY BUT WILL NOT START.

ENGINE WILL NOT RETURN TO IDLE

(Possible Cause)	(Check Procedure and Correction Method)
BINDING ACCELERATOR CABLE	Operate adjusting lever on top of injection pump, and check if engine returns to idle. (See page EM-27) If so, accelerator cable is binding or improperly adjusted and should be repaired accordingly. If engine does not return to idle, injection pump is faulty and should be replaced.

ENGINE WILL NOT SHUT OFF WITH KEY

(Possible Cause)	(Check Procedure and Correction Method)
IMPROPER FUEL CUT SOLENOID OPERATION	Disconnect connector of fuel cut solenoid, and check if engine stops. If so, starter switch is faulty and should be repaired as necessary or replaced. If engine does not stop, either fuel cut solenoid is faulty or there is interference by foreign particles. Repair as necessary.

Diesel Electrical System Diagnosis

ENGINE DOES NOT START COLD

HINT:

- Battery voltage at least 12 V (or 24 V) - starter switch OFF.
- Engine cranks normally.
- Fusible link okay.
- Check the voltage marked with an asterisk (.) just as the starter switch is placed at ON because the voltage will change.

1. Pre-Heating System (Super Glow Type)

Disconnect the water temperature sensor.

Check if indicator light lights up with starter switch ON.
Light on: 6 - 7 seconds

No → Check fuse. (See page ST-2)

Fuse Blown → Check for short circuit and repair if necessary.

Fuse OK

Check indicator light bulb.

Bulb No Good → Replace bulb.

Bulb OK

Check for battery voltage to terminal 3 of pre-heating timer connector (on wire harness side).
If okay, pre-heating timer is faulty and should be replaced.

Yes

Starter switch OFF

*Check for battery voltage to terminal 1 of pre-heating timer with starter switch ON.

No Voltage → *Check that there is 1 V or less to terminal 9.
If okay, timer is faulty and should be replaced.

Voltage

*Check if voltage to terminal 1 of pre-heating timer is terminated after engine is started.

No → Start engine and check/if there is a voltage at terminal 9 of pre-heating timer.
If faulty, repair charging system as necessary.
If okay, timer is faulty and should be replaced.

Yes

Starter switch OFF.

CONTINUED ON PAGE EM-15

Pre-Heating Timer

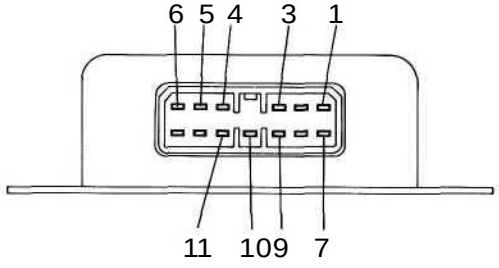

ST0049

CONTINUED FROM PAGE EM-14

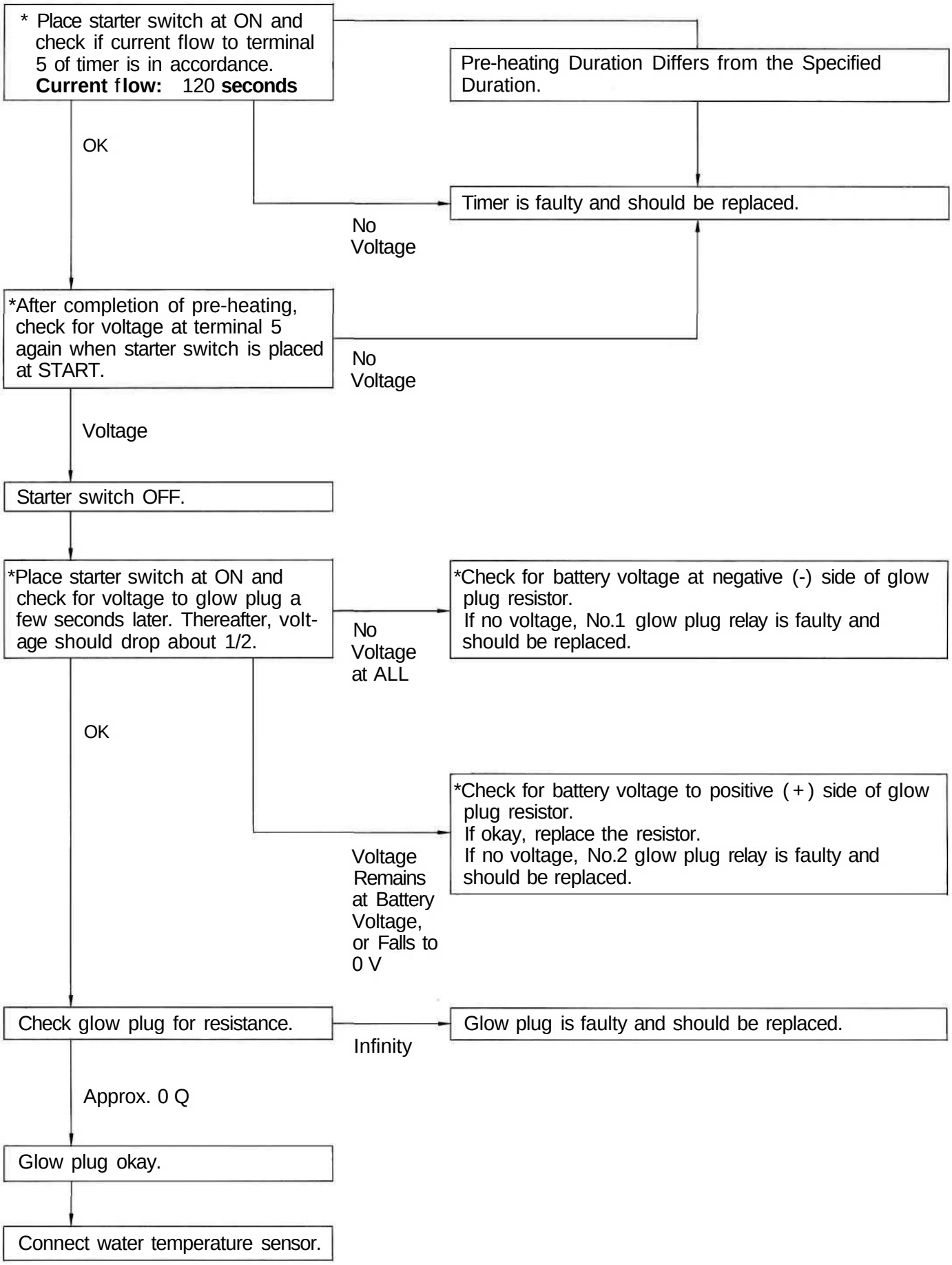

2. Fuel Cut Solenoid Valve

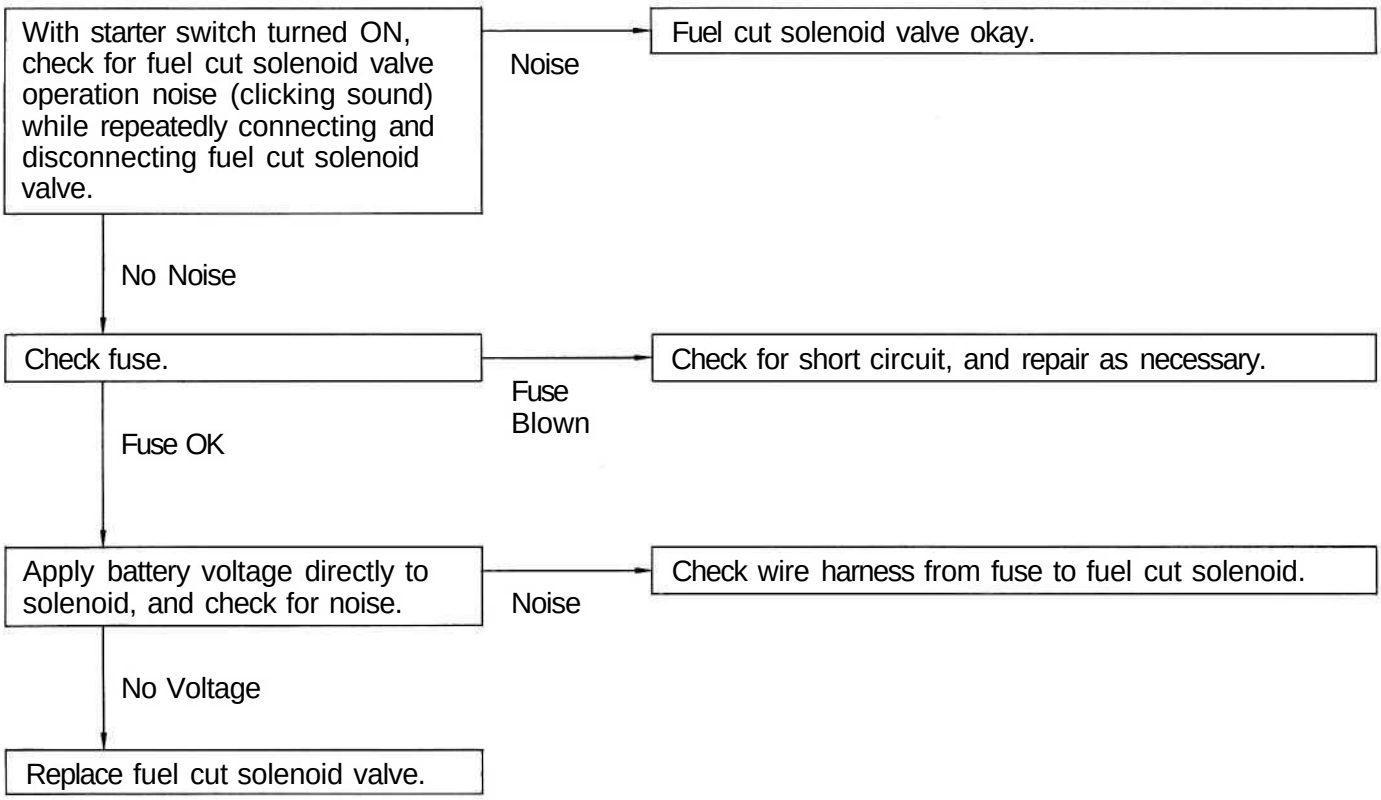

ENGINE TUNE-UP

INSPECTION OF ENGINE COOLANT

(See steps 1 and 2 on page CO-4)

INSPECTION OF ENGINE OIL

(See steps 1 and 2 on page LU-5)

INSPECTION OF BATTERY

(See pages 1 and 2 on page CH-5)

Standard specific gravity:
95D31 R and 95D31L
1.27-1.29 when fully charged at 20°C (68°F)
ex. (95D31 R and 95D31L)
1.25-1.27 when fully charged at 20°C (68°F)

INSPECTION OF AIR FILTER
(Paper Filter Type)

1. INSPECT AIR FILTER

Visually check that the filter element is not excessively dirty, damaged or oily.

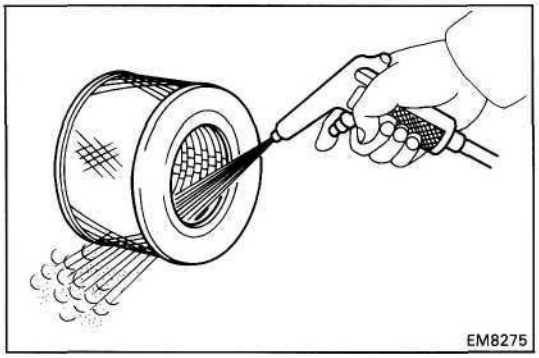

2. CLEAN AIR FILTER

Clean the filter element with compressed air.

First blow from the inside thoroughly. Then blow off the outside of the filter element.

(Washable Type)

1. INSPECT AIR FILTER

Visually check that the filter element is not excessively dirty, damaged or oily.

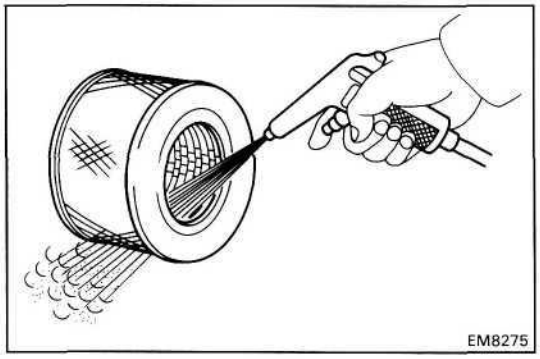

2. CLEAN AIR FILTER

(a) Blow dirt off in the filter element with compressed air.

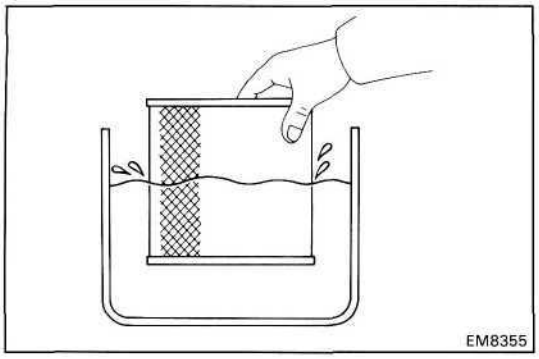

(b) Submerge the filter element in the water and agitate it up and down more than ten times.

(c) Repeat rinsing in clean water unitil rinse water is clear.

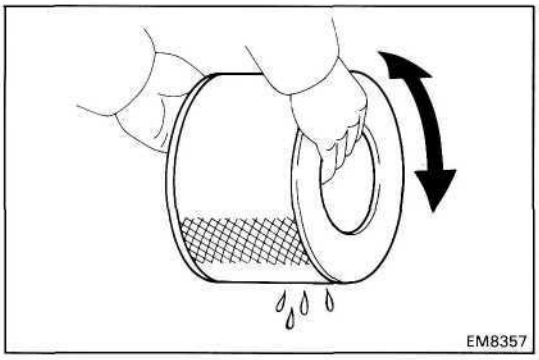

(d) Remove excess water by shaking the filter element or blowing with compressed air.

NOTICE: Do not beat or drop filter element.

(e) Wipe off dust on the air cleaner case interior.

INSPECTION OF ALTERNATOR DRIVE BELT

(See step 3 on page CH-5)

Drive belt deflection:
New belt 6-7 mm (0.24-0.28 in.)
Used belt 8-11 mm (0.31 -0.43 in.)

Drive belt tension (Reference):
New belt 45-55 kg
Used belt 20-35 kg

INSPECTION OF GLOW PLUGS

(See page ST-7)

ADJUSTMENT OF VALVE CLEARANCE

HINT: Adjust the valve clearance while the engine is cold.

1. REMOVE INTAKE PIPE
(See step 6 on page EM-34)

2. REMOVE CYLINDER HEAD COVER
(See step 7 on page EM-35)

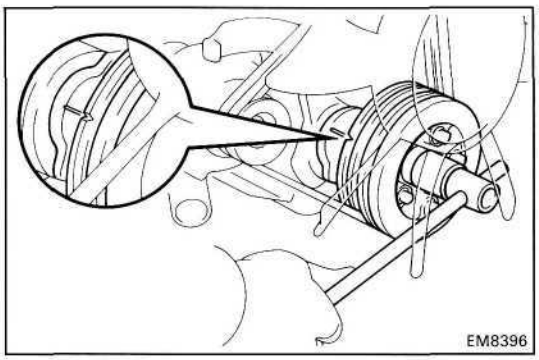

3. SET NO.1 CYLINDER TO TDC/COMPRESSION

(a) Turn the crankshaft pulley clockwise, and align its groove with the timing gear cover groove.

(b) (1PZ)
Check that the valve lifters on the No.1 cylinder are loose and exhaust valve lifter on the No.5 cylinder is tight.

(c) (1 HZ and 1HD-T)
Check that the valve lifters on the No.1 cylinder are loose and valve lifters on the No.6 cylinder are tight.

If not, turn the crankshaft one revolution (360°) and align the mark as above.

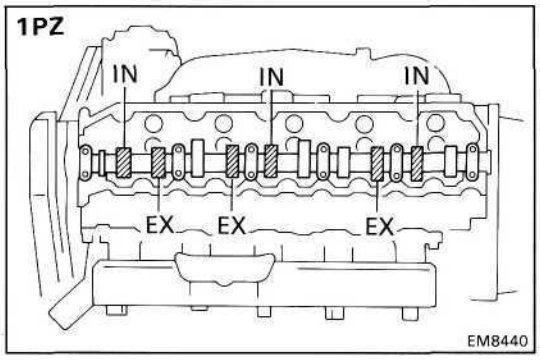

4. ADJUST VALVE CLEARANCE

(a) Check only those valves indicated in the illustration.

- Using a thickness gauge, measure the clearance between the valve lifter and camshaft.
- Record the valve clearance measurements which are out of specification. They will be used later to determine the required replacement adjusting shim.

Valve clearance (Cold):

Intake	**0.15-0.25 mm (0.006-0.010 in.)**
Exhaust	**0.35-0.45 mm (0.014-0.018 in.)**

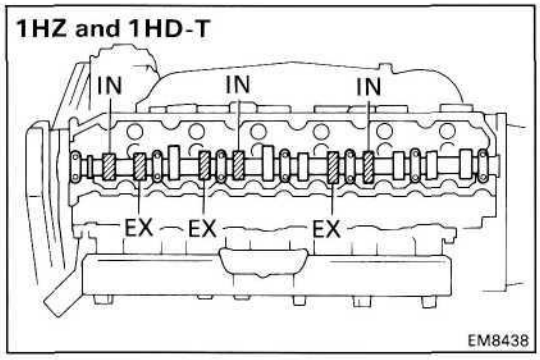

(b) Turn the crankshaft one revolution (360°), and align the mark as above (See procedure step 3).

(c) Check only the valves indicated in the illustration.
Measure the valve clearance.
(See procedure step (a))

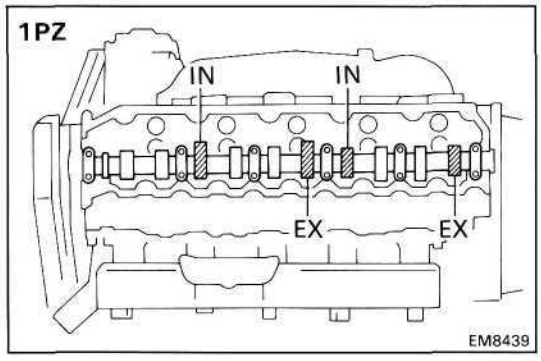

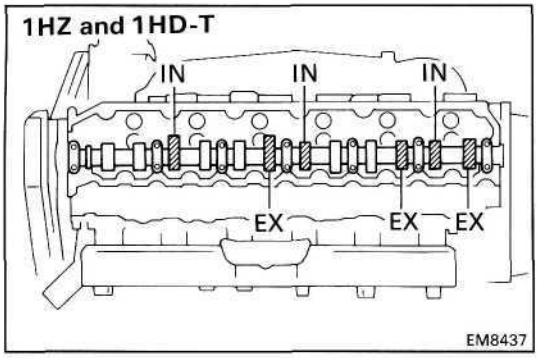

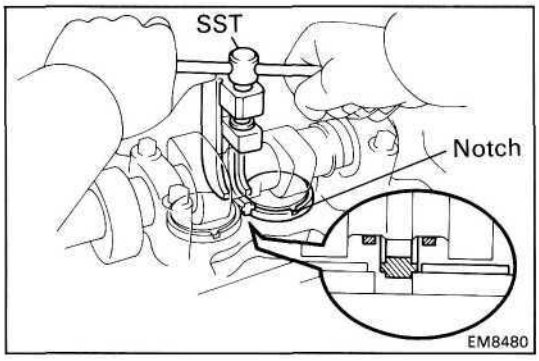

(d) Remove the adjusting shim.

- Turn the crankshaft to position the cam lobe of the camshaft on the adjusting valve upward.
- Using SST, press down the valve lifter.

SST 09248-64011

HINT: Before pressing down the valve lifter, position the notch on the exhaust manifold side.

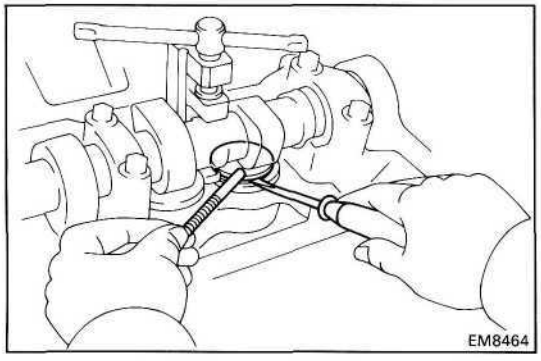

- Remove the adjusting shim with a small screwdriver and magnetic finger.

(e) Determine the replacement adjusting shim size by using following (Formula or Charts):

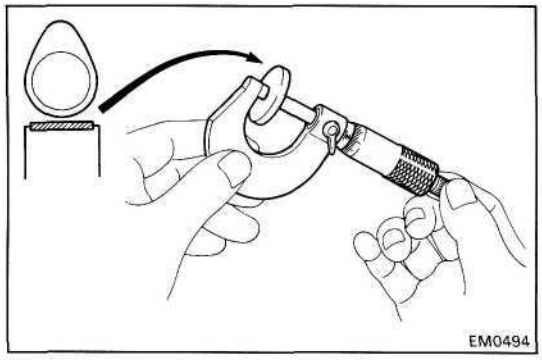

- Using a micrometer, measure the thickness of the removed shim.
- Calculate the thickness of the new shim so the valve clearance comes within specified value.

T.....Thickness of used shim
A.....Measured valve clearance
N.....Thickness of new shim

Intake N = T + (A-0.20 mm (0.008 in.))
Exhaust N = T + (A-0.40 mm (0.016 in.))

- Select a new shim with a thickness as close as possible to the calculated values.

HINT: Shims are available in twenty sizes in increments of 0.05 mm (0.0020 in.), from 2.35 mm (0.0925 in.) to 3.30 mm (0.1299 in.)

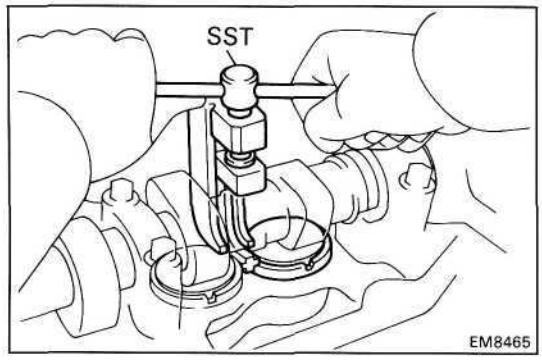

(f) Install a new adjusting shim.

- Place a new adjusting shim on the valve lifter.
- Remove SST.

SST 09248-64011

(g) Recheck the valve clearance.

5. REINSTALL CYLINDER HEAD COVER
(See step 2 on page EM-38)

6. REINSTALL INTAKE PIPE
(See step 3 on page EM-38)

Adjusting Shim Selection Using Chart (Intake)

Measured clearance mm (in.) \ Installed shim thickness mm (in.)	2.340 (0.0921)	2.350 (0.0925)	2.360 (0.0929)	2.380 (0.0937)	2.400 (0.0945)	2.420 (0.0953)	2.440 (0.0961)	2.450 (0.0965)	2.460 (0.0969)	2.480 (0.0976)	2.500 (0.0984)	2.520 (0.0992)	2.540 (0.1000)	2.550 (0.1004)	2.560 (0.1008)	2.580 (0.1016)	2.600 (0.1024)	2.620 (0.1031)	2.640 (0.1039)	2.650 (0.1043)	2.660 (0.1047)	2.680 (0.1055)	2.700 (0.1063)	2.720 (0.1071)	2.740 (0.1079)	2.750 (0.1083)	2.760 (0.1087)	2.780 (0.1094)	2.800 (0.1102)	2.820 (0.1110)	2.840 (0.1118)	2.850 (0.1122)	2.860 (0.1126)	2.880 (0.1134)	2.900 (0.1142)	2.920 (0.1150)	2.940 (0.1157)	2.950 (0.1161)	2.960 (0.1165)	2.980 (0.1173)	3.000 (0.1181)	3.020 (0.1189)	3.040 (0.1197)	3.050 (0.1201)	3.060 (0.1205)	3.080 (0.1213)	3.100 (0.1220)	3.120 (0.1228)	3.140 (0.1236)	3.150 (0.1240)	3.160 (0.1244)	3.180 (0.1252)	3.200 (0.1260)	3.220 (0.1268)	3.240 (0.1276)	3.250 (0.1280)	3.260 (0.1283)	3.280 (0.1291)	3.300 (0.1299)
0.000 – 0.020 (0.0000 – 0.0008)											709	709	709	709	709	704	704	710	710	710	710	01	01	42	42	42	42	06	06	43	43	43	43	11	11	44	44	44	44	16	16	45	45	45	45	21	21	46	46	46	46	26	26	47	47	47	47	31	31
0.021 – 0.040 (0.0008 – 0.0016)										709	709	709	709	704	704	704	710	710	710	01	01	01	42	42	42	06	06	06	43	43	43	11	11	11	44	44	44	16	16	16	45	45	45	21	21	21	46	46	46	26	26	26	47	47	47	31	31	31	48
0.041 – 0.060 (0.0016 – 0.0024)									709	709	709	709	704	704	704	710	710	710	01	01	01	42	42	42	06	06	06	43	43	43	11	11	11	44	44	44	16	16	16	45	45	45	21	21	21	46	46	46	26	26	26	47	47	47	31	31	31	48	48
0.061 – 0.080 (0.0024 – 0.0031)							709	709	709	709	709	704	704	704	710	710	710	01	01	01	42	42	42	06	06	06	43	43	43	11	11	11	44	44	44	16	16	16	45	45	45	21	21	21	46	46	46	26	26	26	47	47	47	31	31	31	48	48	48
0.081 – 0.100 (0.0032 – 0.0039)						709	709	709	709	709	704	704	710	710	710	710	01	01	42	42	42	42	06	06	43	43	43	43	11	11	44	44	44	44	16	16	45	45	45	45	21	21	46	46	46	46	26	26	47	47	47	47	31	31	48	48	48	48	36
0.101 – 0.120 (0.0040 – 0.0047)					709	709	709	709	709	704	704	710	710	710	710	01	01	42	42	42	42	06	06	43	43	43	43	11	11	44	44	44	44	16	16	45	45	45	45	21	21	46	46	46	46	26	26	47	47	47	47	31	31	48	48	48	48	36	36
0.121 – 0.140 (0.0048 – 0.0055)				709	709	709	709	704	704	704	710	710	710	01	01	01	42	42	42	06	06	06	43	43	43	11	11	11	44	44	44	16	16	16	45	45	45	21	21	21	46	46	46	26	26	26	47	47	47	31	31	31	48	48	48	36	36	36	49
0.141 – 0.149 (0.0056 – 0.0059)			709	709	709	709	704	704	704	704	710	710	01	01	01	01	42	42	06	06	06	06	43	43	11	11	11	11	44	44	16	16	16	16	45	45	21	21	21	21	46	46	26	26	26	26	47	47	31	31	31	31	48	48	36	36	36	36	49
0.150 – 0.250 (0.0059 – 0.0098)																																																											
0.251 – 0.260 (0.0099 – 0.0102)	704	704	704	710	710	710	01	01	01	42	42	42	06	06	06	43	43	43	11	11	11	44	44	44	16	16	16	45	45	45	21	21	21	46	46	46	26	26	26	47	47	47	31	31	31	48	48	48	36	36	36	49	49	49	41	41	41	41	
0.261 – 0.280 (0.0103 – 0.0110)	704	704	710	710	710	01	01	01	42	42	42	06	06	06	43	43	43	11	11	11	44	44	44	16	16	16	45	45	45	21	21	21	46	46	46	26	26	26	47	47	47	31	31	31	48	48	48	36	36	36	49	49	49	41	41	41	41		
0.281 – 0.300 (0.0111 – 0.0118)	710	710	710	710	01	01	42	42	42	42	06	06	43	43	43	43	11	11	44	44	44	44	16	16	45	45	45	45	21	21	46	46	46	46	26	26	47	47	47	47	31	31	48	48	48	48	36	36	49	49	49	49	41	41	41	41			
0.301 – 0.320 (0.0119 – 0.0126)	710	710	710	01	01	42	42	42	42	06	06	43	43	43	43	11	11	44	44	44	44	16	16	45	45	45	45	21	21	46	46	46	46	26	26	47	47	47	47	31	31	48	48	48	48	36	36	49	49	49	49	41	41	41					
0.321 – 0.340 (0.0126 – 0.0134)	710	01	01	01	42	42	42	06	06	06	43	43	43	11	11	11	44	44	44	16	16	16	45	45	45	21	21	21	46	46	46	26	26	26	47	47	47	31	31	31	48	48	48	36	36	36	49	49	49	41	41	41	41						
0.341 – 0.360 (0.0134 – 0.0142)	01	01	01	42	42	42	06	06	06	43	43	43	11	11	11	44	44	44	16	16	16	45	45	45	21	21	21	46	46	46	26	26	26	47	47	47	31	31	31	48	48	48	36	36	36	49	49	49	41	41	41	41							
0.361 – 0.380 (0.0142 – 0.0150)	01	01	42	42	42	06	06	06	43	43	43	11	11	11	44	44	44	16	16	16	45	45	45	21	21	21	46	46	46	26	26	26	47	47	47	31	31	31	48	48	48	36	36	36	49	49	49	41	41	41	41								
0.381 – 0.400 (0.0150 – 0.0157)	42	42	42	42	06	06	43	43	43	43	11	11	44	44	44	44	16	16	45	45	45	45	21	21	46	46	46	46	26	26	47	47	47	47	31	31	48	48	48	48	36	36	49	49	49	49	41	41	41	41									
0.401 – 0.420 (0.0158 – 0.0165)	42	42	42	06	06	43	43	43	43	11	11	44	44	44	44	16	16	45	45	45	45	21	21	46	46	46	46	26	26	47	47	47	47	31	31	48	48	48	48	36	36	49	49	49	49	41	41	41											
0.421 – 0.440 (0.0166 – 0.0173)	42	06	06	06	43	43	43	11	11	11	44	44	44	16	16	16	45	45	45	21	21	21	46	46	46	26	26	26	47	47	47	31	31	31	48	48	48	36	36	36	49	49	49	41	41	41	41												
0.441 – 0.460 (0.0174 – 0.0181)	06	06	06	43	43	43	11	11	11	44	44	44	16	16	16	45	45	45	21	21	21	46	46	46	26	26	26	47	47	47	31	31	31	48	48	48	36	36	36	49	49	49	41	41	41	41													
0.461 – 0.480 (0.0181 – 0.0189)	06	06	43	43	43	11	11	11	44	44	44	16	16	16	45	45	45	21	21	21	46	46	46	26	26	26	47	47	47	31	31	31	48	48	48	36	36	36	49	49	49	41	41	41	41														
0.481 – 0.500 (0.0189 – 0.0197)	43	43	43	43	11	11	44	44	44	44	16	16	45	45	45	45	21	21	46	46	46	46	26	26	47	47	47	47	31	31	48	48	48	48	36	36	49	49	49	49	41	41	41	41															
0.501 – 0.520 (0.0197 – 0.0205)	43	43	43	11	11	44	44	44	44	16	16	45	45	45	45	21	21	46	46	46	46	26	26	47	47	47	47	31	31	48	48	48	48	36	36	49	49	49	49	41	41	41																	
0.521 – 0.540 (0.0205 – 0.0213)	43	11	11	11	44	44	44	16	16	16	45	45	45	21	21	21	46	46	46	26	26	26	47	47	47	31	31	31	48	48	48	36	36	36	49	49	49	41	41	41	41																		
0.541 – 0.560 (0.0213 – 0.0220)	11	11	11	44	44	44	16	16	16	45	45	45	21	21	21	46	46	46	26	26	26	47	47	47	31	31	31	48	48	48	36	36	36	49	49	49	41	41	41	41																			
0.561 – 0.580 (0.0221 – 0.0228)	11	11	44	44	44	16	16	16	45	45	45	21	21	21	46	46	46	26	26	26	47	47	47	31	31	31	48	48	48	36	36	36	49	49	49	41	41	41	41																				
0.581 – 0.600 (0.0229 – 0.0236)	44	44	44	44	16	16	45	45	45	45	21	21	46	46	46	46	26	26	47	47	47	47	31	31	48	48	48	48	36	36	49	49	49	49	41	41	41	41																					
0.601 – 0.620 (0.0237 – 0.0244)	44	44	44	16	16	45	45	45	45	21	21	46	46	46	46	26	26	47	47	47	47	31	31	48	48	48	48	36	36	49	49	49	49	41	41	41																							
0.621 – 0.640 (0.0244 – 0.0252)	44	16	16	16	45	45	45	21	21	21	46	46	46	26	26	26	47	47	47	31	31	31	48	48	48	36	36	36	49	49	49	41	41	41	41																								
0.641 – 0.660 (0.0252 – 0.0260)	16	16	16	45	45	45	21	21	21	46	46	46	26	26	26	47	47	47	31	31	31	48	48	48	36	36	36	49	49	49	41	41	41	41																									
0.661 – 0.680 (0.0260 – 0.0268)	16	16	45	45	45	21	21	21	46	46	46	26	26	26	47	47	47	31	31	31	48	48	48	36	36	36	49	49	49	41	41	41	41																										
0.681 – 0.700 (0.0268 – 0.0276)	45	45	45	45	21	21	46	46	46	46	26	26	47	47	47	47	31	31	48	48	48	48	36	36	49	49	49	49	41	41	41	41																											
0.701 – 0.720 (0.0276 – 0.0283)	45	45	45	21	21	46	46	46	46	26	26	47	47	47	47	31	31	48	48	48	48	36	36	49	49	49	49	41	41	41																													
0.721 – 0.740 (0.0284 – 0.0291)	45	21	21	21	46	46	46	26	26	26	47	47	47	31	31	31	48	48	48	36	36	36	49	49	49	41	41	41	41																														
0.741 – 0.760 (0.0292 – 0.0299)	21	21	21	46	46	46	26	26	26	47	47	47	31	31	31	48	48	48	36	36	36	49	49	49	41	41	41	41																															
0.761 – 0.780 (0.0300 – 0.0307)	21	21	46	46	46	26	26	26	47	47	47	31	31	31	48	48	48	36	36	36	49	49	49	41	41	41	41																																
0.781 – 0.800 (0.0307 – 0.0315)	46	46	46	46	26	26	47	47	47	47	31	31	48	48	48	48	36	36	49	49	49	49	41	41	41	41																																	
0.801 – 0.820 (0.0315 – 0.0323)	46	46	46	26	26	47	47	47	47	31	31	48	48	48	48	36	36	49	49	49	49	41	41	41																																			
0.821 – 0.840 (0.0323 – 0.0331)	46	26	26	26	47	47	47	31	31	31	48	48	48	36	36	36	49	49	49	41	41	41	41																																				
0.841 – 0.860 (0.0331 – 0.0339)	26	26	26	47	47	47	31	31	31	48	48	48	36	36	36	49	49	49	41	41	41	41																																					
0.861 – 0.880 (0.0339 – 0.0346)	26	26	47	47	47	31	31	31	48	48	48	36	36	36	49	49	49	41	41	41	41																																						
0.881 – 0.900 (0.0347 – 0.0354)	47	47	47	47	31	31	48	48	48	48	36	36	49	49	49	49	41	41	41	41																																							
0.901 – 0.920 (0.0355 – 0.0362)	47	47	47	31	31	48	48	48	48	36	36	49	49	49	49	41	41	41																																									
0.921 – 0.940 (0.0363 – 0.0370)	47	31	31	31	48	48	48	36	36	36	49	49	49	41	41	41	41																																										
0.941 – 0.960 (0.0370 – 0.0378)	31	31	31	48	48	48	36	36	36	49	49	49	41	41	41	41																																											
0.961 – 0.980 (0.0378 – 0.0386)	31	31	48	48	48	36	36	36	49	49	49	41	41	41	41																																												
0.981 – 1.000 (0.0386 – 0.0394)	48	48	48	48	36	36	49	49	49	49	41	41	41	41																																														
1.001 – 1.020 (0.0394 – 0.0402)	48	48	48	36	36	49	49	49	49	41	41	41																																															
1.021 – 1.040 (0.0402 – 0.0409)	48	36	36	36	49	49	49	41	41	41	41																																																
1.041 – 1.060 (0.0410 – 0.0417)	36	36	36	49	49	49	41	41	41	41																																																	
1.061 – 1.080 (0.0418 – 0.0425)	36	36	49	49	49	41	41	41	41																																																		
1.081 – 1.100 (0.0426 – 0.0433)	49	49	49	49	41	41	41	41																																																			
1.101 – 1.120 (0.0433 – 0.0441)	49	49	49	41	41	41																																																					
1.121 – 1.140 (0.0441 – 0.0449)	49	41	41	41	41																																																						
1.141 – 1.160 (0.0449 – 0.0457)	41	41	41	41																																																								
1.161 – 1.180 (0.0457 – 0.0465)	41	41	41																																																								
1.181 – 1.200 (0.0465 – 0.0472)	41	41																																																									
1.201 – 1.210 (0.0473 – 0.0476)	41																																																										

New shim thickness mm (in.)

Shim No.	Thickness	Shim No.	Thickness
709	2.35 (0.0925)	45	2.85 (0.1122)
704	2.40 (0.0945)	21	2.90 (0.1142)
710	2.45 (0.0965)	46	2.95 (0.1161)
01	2.50 (0.0984)	26	3.00 (0.1181)
42	2.55 (0.1004)	47	3.05 (0.1201)
06	2.60 (0.1024)	31	3.10 (0.1220)
43	2.65 (0.1043)	48	3.15 (0.1240)
11	2.70 (0.1063)	36	3.20 (0.1260)
44	2.75 (0.1083)	49	3.25 (0.1280)
16	2.80 (0.1102)	41	3.30 (0.1299)

Intake valve clearance (Cold):
0.15-0.25 mm (0.006-0.010 in.)

EXAMPLE: The 2.800 mm (0.1102 in.) shim is installed and the measured clearance is 0.300 mm (0.0118 in.). Replace the 2.800 mm (0.1102 in.) shim with a No.21 shim.

Adjusting Shim Selection Using Chart (Exhaust)

Measured clearance mm (in.) \ Installed shim thickness mm (in.)	2.340 (0.0921)	2.350 (0.0925)	2.360 (0.0929)	2.380 (0.0937)	2.400 (0.0945)	2.420 (0.0953)	2.440 (0.0961)	2.450 (0.0965)	2.460 (0.0969)	2.480 (0.0976)	2.500 (0.0984)	2.520 (0.0992)	2.540 (0.1000)	2.550 (0.1004)	2.560 (0.1008)	2.580 (0.1016)	2.600 (0.1024)	2.620 (0.1031)	2.640 (0.1039)	2.650 (0.1043)	2.660 (0.1047)	2.680 (0.1055)	2.700 (0.1063)	2.720 (0.1071)	2.740 (0.1079)
0.000 – 0.020 (0.0000 – 0.0008)																							709	709	709
0.021 – 0.040 (0.0008 – 0.0016)																						709	709	709	709
0.041 – 0.060 (0.0016 – 0.0024)																					709	709	709	709	704
0.061 – 0.080 (0.0024 – 0.0031)																			709	709	709	709	709	704	704
0.081 – 0.100 (0.0032 – 0.0039)																		709	709	709	709	704	704	704	710
0.101 – 0.120 (0.0040 – 0.0047)																	709	709	709	709	704	704	704	710	710
0.121 – 0.140 (0.0048 – 0.0055)																709	709	709	709	704	704	704	710	710	710
0.141 – 0.160 (0.0056 – 0.0063)															709	709	709	709	704	704	704	710	710	710	01
0.161 – 0.180 (0.0063 – 0.0071)													709	709	709	709	709	704	704	704	710	710	710	01	01
0.0181 – 0.200 (0.0071 – 0.0079)												709	709	709	709	709	704	704	710	710	710	710	01	01	42
0.201 – 0.220 (0.0079 – 0.0087)											709	709	709	709	709	704	704	710	710	710	710	01	01	42	42
0.221 – 0.240 (0.0087 – 0.0094)										709	709	709	709	704	704	704	710	710	710	01	01	01	42	42	42
0.241 – 0.260 (0.0095 – 0.0102)									709	709	709	709	704	704	704	710	710	710	01	01	01	42	42	42	06
0.261 – 0.280 (0.0103 – 0.0110)							709	709	709	709	709	704	704	704	710	710	710	01	01	01	42	42	42	06	06
0.281 – 0.300 (0.0111 – 0.0118)						709	709	709	709	709	704	704	710	710	710	710	01	01	42	42	42	42	06	06	43
0.301 – 0.320 (0.0119 – 0.0126)					709	709	709	709	709	704	704	710	710	710	710	01	01	42	42	42	42	06	06	43	43
0.321 – 0.340 (0.0126 – 0.0134)				709	709	709	709	704	704	704	710	710	710	01	01	01	42	42	42	06	06	06	43	43	43
0.341 – 0.349 (0.0134 – 0.0137)			709	709	709	709	704	704	710	710	710	710	01	01	01	01	42	42	06	06	06	06	43	43	11
0.350 – 0.450 (0.0138 – 0.0179)																									
0.451 – 0.460 (0.0178 – 0.0181)	704	704	704	710	710	710	01	01	01	42	42	42	06	06	06	43	43	43	11	11	11	44	44	44	16
0.461 – 0.480 (0.0181 – 0.0189)	704	704	710	710	710	01	01	01	42	42	42	06	06	06	43	43	43	11	11	11	44	44	44	16	16
0.481 – 0.500 (0.0189 – 0.0197)	710	710	710	710	01	01	42	42	42	42	06	06	43	43	43	43	11	11	44	44	44	44	16	16	45
0.501 – 0.520 (0.0197 – 0.0205)	710	710	710	01	01	42	42	42	42	06	06	43	43	43	43	11	11	44	44	44	44	16	16	45	45
0.521 – 0.540 (0.0205 – 0.0213)	710	01	01	01	42	42	42	06	06	06	43	43	43	11	11	11	44	44	44	16	16	16	45	45	45
0.541 – 0.560 (0.0213 – 0.0222)	01	01	01	42	42	42	06	06	06	43	43	43	11	11	11	44	44	44	16	16	16	45	45	45	21
0.561 – 0.580 (0.0221 – 0.0228)	01	01	42	42	42	06	06	06	43	43	43	11	11	11	44	44	44	16	16	16	45	45	45	21	21
0.581 – 0.600 (0.0229 – 0.0236)	42	42	42	42	06	06	43	43	43	43	11	11	44	44	44	44	16	16	45	45	45	45	21	21	46
0.601 – 0.620 (0.0237 – 0.0244)	42	42	42	06	06	43	43	43	43	11	11	44	44	44	44	16	16	45	45	45	45	21	21	46	46
0.621 – 0.640 (0.0244 – 0.0252)	42	06	06	06	43	43	43	11	11	11	44	44	44	16	16	16	45	45	45	21	21	21	46	46	46
0.641 – 0.660 (0.0252 – 0.0260)	06	06	06	43	43	43	11	11	11	44	44	44	16	16	16	45	45	45	21	21	21	46	46	46	26
0.661 – 0.680 (0.0260 – 0.0268)	06	06	43	43	43	11	11	11	44	44	44	16	16	16	45	45	45	21	21	21	46	46	46	26	26
0.681 – 0.700 (0.0268 – 0.0276)	43	43	43	43	11	11	44	44	44	44	16	16	45	45	45	45	21	21	46	46	46	46	26	26	47
0.701 – 0.720 (0.0276 – 0.0283)	43	43	43	11	11	44	44	44	44	16	16	45	45	45	45	21	21	46	46	46	46	26	26	47	47
0.721 – 0.740 (0.0284 – 0.0291)	43	11	11	11	44	44	44	16	16	16	45	45	45	21	21	21	46	46	46	26	26	26	47	47	47
0.741 – 0.760 (0.0292 – 0.0299)	11	11	11	44	44	44	16	16	16	45	45	45	21	21	21	46	46	46	26	26	26	47	47	47	31
0.761 – 0.780 (0.0300 – 0.0307)	11	11	44	44	44	16	16	16	45	45	45	21	21	21	46	46	46	26	26	26	47	47	47	31	31
0.781 – 0.800 (0.0307 – 0.0315)	44	44	44	44	16	16	45	45	45	45	21	21	46	46	46	46	26	26	47	47	47	47	31	31	48
0.801 – 0.820 (0.0315 – 0.0323)	44	44	44	16	16	45	45	45	45	21	21	46	46	46	46	26	26	47	47	47	47	31	31	48	48
0.821 – 0.840 (0.0323 – 0.0331)	44	16	16	16	45	45	45	21	21	21	46	46	46	26	26	26	47	47	47	31	31	31	48	48	48
0.841 – 0.860 (0.0331 – 0.0339)	16	16	16	45	45	45	21	21	21	46	46	46	26	26	26	47	47	47	31	31	31	48	48	48	36
0.861 – 0.880 (0.0339 – 0.0346)	16	16	45	45	45	21	21	21	46	46	46	26	26	26	47	47	47	31	31	31	48	48	48	36	36
0.881 – 0.900 (0.0347 – 0.0354)	45	45	45	45	21	21	46	46	46	46	26	26	47	47	47	47	31	31	48	48	48	48	36	36	49
0.901 – 0.920 (0.0355 – 0.0362)	45	45	45	21	21	46	46	46	46	26	26	47	47	47	47	31	31	48	48	48	48	36	36	49	49
0.921 – 0.940 (0.0363 – 0.0370)	45	21	21	21	46	46	46	26	26	26	47	47	47	31	31	31	48	48	48	36	36	36	49	49	49
0.941 – 0.960 (0.0370 – 0.0378)	21	21	21	46	46	46	26	26	26	47	47	47	31	31	31	48	48	48	36	36	36	49	49	49	41
0.961 – 0.980 (0.0378 – 0.0386)	21	21	46	46	46	26	26	26	47	47	47	31	31	31	48	48	48	36	36	36	49	49	49	41	41
0.981 – 1.000 (0.0386 – 0.0394)	46	46	46	46	26	26	47	47	47	47	31	31	48	48	48	48	36	36	49	49	49	49	41	41	41
1.001 – 1.020 (0.0394 – 0.0402)	46	46	46	26	26	47	47	47	47	31	31	48	48	48	48	36	36	49	49	49	49	41	41	41	
1.021 – 1.040 (0.0402 – 0.0409)	46	26	26	26	47	47	47	31	31	31	48	48	48	48	36	36	36	49	49	49	41	41	41		
1.041 – 1.060 (0.0410 – 0.0417)	26	26	26	47	47	47	31	31	31	48	48	48	36	36	36	49	49	49	41	41	41	41			
1.061 – 1.080 (0.0418 – 0.0425)	26	26	47	47	47	31	31	31	48	48	48	36	36	36	49	49	49	41	41	41	41				
1.081 – 1.100 (0.0426 – 0.0433)	47	47	47	47	31	31	48	48	48	36	36	49	49	49	49	41	41	41	41	41					
1.101 – 1.120 (0.0433 – 0.0441)	47	47	47	31	31	48	48	48	36	36	49	49	49	49	41	41	41	41							
1.121 – 1.140 (0.0441 – 0.0449)	47	31	31	31	48	48	48	36	36	36	49	49	49	41	41	41	41								
1.141 – 1.160 (0.0449 – 0.0457)	31	31	31	48	48	48	36	36	36	49	49	49	41	41	41	41									
1.161 – 1.180 (0.0457 – 0.0465)	31	48	48	48	48	36	36	36	49	49	49	41	41	41	41										
1.181 – 1.200 (0.0465 – 0.0472)	48	48	48	48	36	36	49	49	49	49	41	41	41	41											
1.201 – 1.220 (0.0473 – 0.0480)	48	48	48	36	36	49	49	49	49	41	41	41													
1.221 – 1.240 (0.0481 – 0.0488)	48	48	36	36	49	49	49	41	41	41	41														
1.241 – 1.260 (0.0489 – 0.0496)	36	36	36	49	49	49	41	41	41	41															
1.261 – 1.280 (0.0496 – 0.0504)	36	36	49	49	49	41	41	41	41																
1.281 – 1.300 (0.0504 – 0.0512)	49	49	49	49	41	41	41	41																	
1.301 – 1.320 (0.0512 – 0.0520)	49	49	49	41	41	41																			
1.321 – 1.340 (0.0520 – 0.0528)	49	41	41	41	41																				
1.341 – 1.360 (0.0528 – 0.0535)	41	41	41	41																					
1.361 – 1.380 (0.0536 – 0.0543)	41	41	41																						
1.381 – 1.400 (0.0544 – 0.0551)	41	41																							

Measured clearance mm (in.) \ Installed shim thickness mm (in.)	2.750 (0.1083)	2.760 (0.1087)	2.780 (0.1094)	2.800 (0.1102)	2.820 (0.1110)	2.840 (0.1118)	2.850 (0.1122)	2.860 (0.1126)	2.880 (0.1134)	2.900 (0.1142)	2.920 (0.1150)	2.940 (0.1157)	2.950 (0.1161)	2.960 (0.1165)	2.980 (0.1173)	3.000 (0.1181)	3.020 (0.1189)	3.040 (0.1197)	3.050 (0.1201)	3.060 (0.1205)	3.080 (0.1213)	3.100 (0.1220)	3.120 (0.1228)	3.140 (0.1236)	3.150 (0.1240)	3.160 (0.1244)	3.180 (0.1252)	3.200 (0.1260)	3.220 (0.1268)	3.240 (0.1276)	3.250 (0.1280)	3.260 (0.1283)	3.280 (0.1291)	3.300 (0.1299)
0.000 – 0.020 (0.0000 – 0.0008)	709	709	704	704	710	710	01	01	01	01	42	42	06	06	06	06	43	43	11	11	11	11	44	44	16	16	16	16	45	45	21	21	21	21
0.021 – 0.040 (0.0008 – 0.0016)	704	704	704	710	710	710	01	01	01	42	42	42	06	06	06	43	43	43	11	11	11	44	44	44	16	16	16	45	45	45	21	21	21	46
0.041 – 0.060 (0.0016 – 0.0024)	704	704	710	710	710	01	01	01	42	42	42	06	06	06	43	43	43	11	11	11	44	44	44	16	16	16	45	45	45	21	21	21	46	46
0.061 – 0.080 (0.0024 – 0.0031)	704	710	710	710	01	01	01	42	42	42	06	06	06	43	43	43	11	11	11	44	44	44	16	16	16	45	45	45	21	21	21	46	46	46
0.081 – 0.100 (0.0032 – 0.0039)	710	710	710	01	01	42	42	42	42	06	06	43	43	43	43	11	11	44	44	44	44	16	16	45	45	45	45	21	21	46	46	46	46	26
0.101 – 0.120 (0.0040 – 0.0047)	710	710	01	01	42	42	42	42	06	06	43	43	43	43	11	11	44	44	44	44	16	16	45	45	45	45	21	21	46	46	46	46	26	26
0.121 – 0.140 (0.0048 – 0.0055)	01	01	01	42	42	42	06	06	06	43	43	43	11	11	11	44	44	44	16	16	16	45	45	45	21	21	21	46	46	46	26	26	26	47
0.141 – 0.160 (0.0056 – 0.0063)	01	01	42	42	42	06	06	06	43	43	43	11	11	11	44	44	44	16	16	16	45	45	45	21	21	21	46	46	46	26	26	26	47	47
0.161 – 0.180 (0.0063 – 0.0071)	01	42	42	42	06	06	06	43	43	43	11	11	11	44	44	44	16	16	16	45	45	45	21	21	21	46	46	46	26	26	26	47	47	47
0.0181 – 0.200 (0.0071 – 0.0079)	42	42	42	06	06	43	43	43	43	11	11	44	44	44	44	16	16	45	45	45	45	21	21	46	46	46	46	26	26	47	47	47	47	31
0.201 – 0.220 (0.0079 – 0.0087)	42	42	06	06	43	43	43	43	11	11	44	44	44	44	16	16	45	45	45	45	21	21	46	46	46	46	26	26	47	47	47	47	31	31
0.221 – 0.240 (0.0087 – 0.0094)	06	06	06	43	43	43	11	11	11	44	44	44	16	16	16	45	45	45	21	21	21	46	46	46	26	26	26	47	47	47	31	31	31	48
0.241 – 0.260 (0.0095 – 0.0102)	06	06	43	43	43	11	11	11	44	44	44	16	16	16	45	45	45	21	21	21	46	46	46	26	26	26	47	47	47	31	31	31	48	48
0.261 – 0.280 (0.0103 – 0.0110)	06	43	43	43	11	11	11	44	44	44	16	16	16	45	45	45	21	21	21	46	46	46	26	26	26	47	47	47	31	31	31	48	48	48
0.281 – 0.300 (0.0111 – 0.0118)	43	43	43	11	11	44	44	44	44	16	16	45	45	45	45	21	21	46	46	46	46	26	26	47	47	47	47	31	31	48	48	48	48	36
0.301 – 0.320 (0.0119 – 0.0126)	43	43	11	11	44	44	44	44	16	16	45	45	45	45	21	21	46	46	46	46	26	26	47	47	47	47	31	31	48	48	48	48	36	36
0.321 – 0.340 (0.0126 – 0.0134)	11	11	11	44	44	44	16	16	16	45	45	45	21	21	21	46	46	46	26	26	26	47	47	47	31	31	31	48	48	48	36	36	36	49
0.341 – 0.349 (0.0134 – 0.0137)	11	11	11	44	44	16	16	16	16	45	45	21	21	21	21	46	46	26	26	26	26	47	47	31	31	31	31	48	48	36	36	36	36	49
0.350 – 0.450 (0.0138 – 0.0179)																																		
0.451 – 0.460 (0.0178 – 0.0181)	16	16	45	45	45	21	21	21	46	46	46	26	26	26	47	47	47	31	31	31	48	48	48	36	36	36	49	49	49	41	41	41	41	
0.461 – 0.480 (0.0181 – 0.0189)	16	45	45	45	21	21	21	46	46	46	26	26	26	47	47	47	31	31	31	48	48	48	36	36	36	49	49	49	41	41	41	41		
0.481 – 0.500 (0.0189 – 0.0197)	45	45	45	21	21	46	46	46	46	26	26	47	47	47	47	31	31	48	48	48	48	36	36	49	49	49	49	41	41	41	41			
0.501 – 0.520 (0.0197 – 0.0205)	45	45	21	21	46	46	46	46	26	26	47	47	47	47	31	31	48	48	48	48	36	36	36	49	49	49	41	41	41					
0.521 – 0.540 (0.0205 – 0.0213)	21	21	21	46	46	46	26	26	26	47	47	47	31	31	31	48	48	48	36	36	36	49	49	49	41	41	41	41						
0.541 – 0.560 (0.0213 – 0.0222)	21	21	46	46	46	26	26	26	47	47	47	31	31	31	48	48	48	36	36	36	49	49	49	41	41	41	41							
0.561 – 0.580 (0.0221 – 0.0228)	21	46	46	46	26	26	26	47	47	47	31	31	31	48	48	48	36	36	36	49	49	49	41	41	41	41								
0.581 – 0.600 (0.0229 – 0.0236)	46	46	46	26	26	47	47	47	47	31	31	48	48	48	48	36	36	49	49	49	49	41	41	41	41									
0.601 – 0.620 (0.0237 – 0.0244)	46	46	26	26	47	47	47	47	31	31	48	48	48	36	36	49	49	49	49	41	41	41	41											
0.621 – 0.640 (0.0244 – 0.0252)	26	26	26	47	47	47	31	31	31	48	48	48	36	36	36	49	49	49	41	41	41	41												
0.641 – 0.660 (0.0252 – 0.0260)	26	26	47	47	47	31	31	31	48	48	48	36	36	36	49	49	49	41	41	41	41													
0.661 – 0.680 (0.0260 – 0.0268)	26	47	47	47	31	31	31	48	48	48	36	36	36	49	49	49	41	41	41	41														
0.681 – 0.700 (0.0268 – 0.0276)	47	47	47	31	31	48	48	48	48	36	36	49	49	49	49	41	41	41	41															
0.701 – 0.720 (0.0276 – 0.0283)	47	47	31	31	48	48	48	48	36	36	49	49	49	49	41	41	41																	
0.721 – 0.740 (0.0284 – 0.0291)	31	31	31	48	48	48	36	36	36	49	49	49	41	41	41	41																		
0.741 – 0.760 (0.0292 – 0.0299)	31	31	48	48	48	36	36	36	49	49	49	41	41	41	41																			
0.761 – 0.780 (0.0300 – 0.0307)	31	48	48	48	36	36	36	49	49	49	41	41	41	41																				
0.781 – 0.800 (0.0307 – 0.0315)	48	48	48	36	36	49	49	49	49	41	41	41	41																					
0.801 – 0.820 (0.0315 – 0.0323)	48	48	36	36	49	49	49	49	41	41	41																							
0.821 – 0.840 (0.0323 – 0.0331)	48	36	36	36	49	49	49	41	41	41																								
0.841 – 0.860 (0.0331 – 0.0339)	36	36	49	49	49	41	41	41	41																									
0.861 – 0.880 (0.0339 – 0.0346)	36	49	49	49	41	41	41	41																										
0.881 – 0.900 (0.0347 – 0.0354)	49	49	49	41	41	41	41																											
0.901 – 0.920 (0.0355 – 0.0362)	49	49	41	41	41																													
0.921 – 0.940 (0.0363 – 0.0370)	41	41	41	41																														
0.941 – 0.960 (0.0370 – 0.0378)	41	41	41																															
0.961 – 0.980 (0.0378 – 0.0386)	41	41																																
0.981 – 1.000 (0.0386 – 0.0394)	41																																	

New shim thickness mm (in.)

Shim No.	Thickness	Shim No.	Thickness
709	2.35 (0.0925)	45	2.85 (0.1122)
704	2.40 (0.0945)	21	2.90 (0.1142)
710	2.45 (0.0965)	46	2.95 (0.1161)
01	2.50 (0.0984)	26	3.00 (0.1181)
42	2.55 (0.1004)	47	3.05 (0.1201)
06	2.60 (0.1024)	31	3.10 (0.1220)
43	2.65 (0.1043)	48	3.15 (0.1240)
11	2.70 (0.1063)	36	3.20 (0.1260)
44	2.75 (0.1083)	49	3.25 (0.1280)
16	2.80 (0.1102)	41	3.30 (0.1299)

Exhaust valve clearance:
0.35-0.45 mm (0.014-0.018 in.)

EXAMPLE: The 2.800 mm (0.1102 in.) shim is installed and the measured clearance is 0.300 mm (0.0118 in.). Replace the 2.800 mm (0.1102 in.) shim with a No.11 shim.

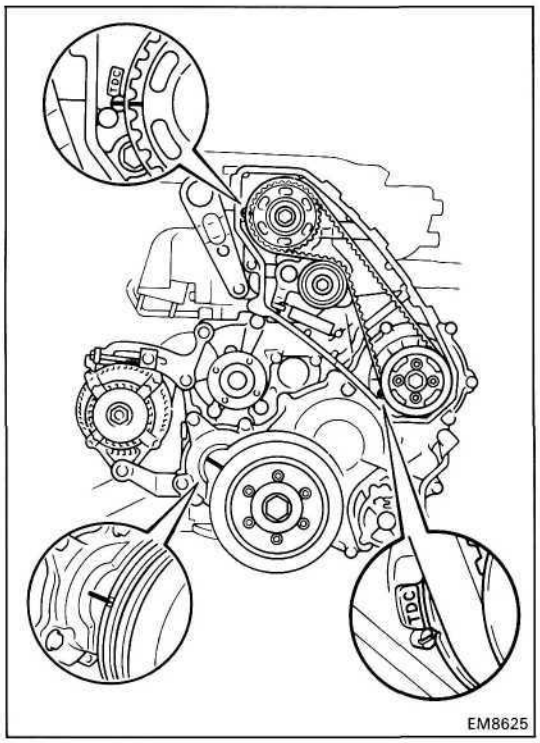

ADJUSTMENT OF INJECTION TIMING

1. (1PZ)
REMOVE TIMING BELT COVER
(See step 1 on page EM-33)

2. (1PZ)
SET NO.1 CYLINDER TO TDC/COMPRESSION

Turn the crankshaft pulley clockwise, and align each pulley groove with the timing marks (TDC mark) as shown in the illustration.

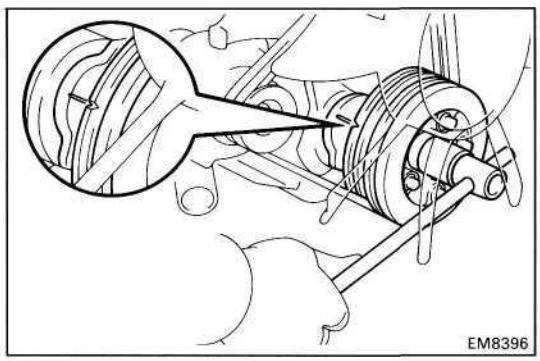

3. (1 HZ and 1HD-T)
SET NO.1 OR NO.6 CYLINDER TO TDC/COMPRESSION

Turn the crankshaft pulley clockwise, and align its groove with the timing gear cover groove.

4. (1HD-T w/BACS)
REMOVE AIR CONTROL VALVE (ACV)

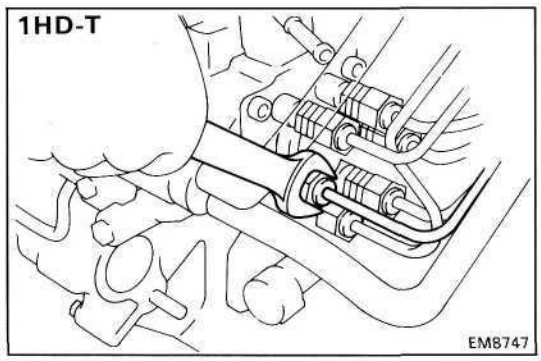

5. INSTALL SST AND DIAL INDICATOR

(a) (1HD-T)
Loosen the union nut of the No.5 cylinder injection pipe.

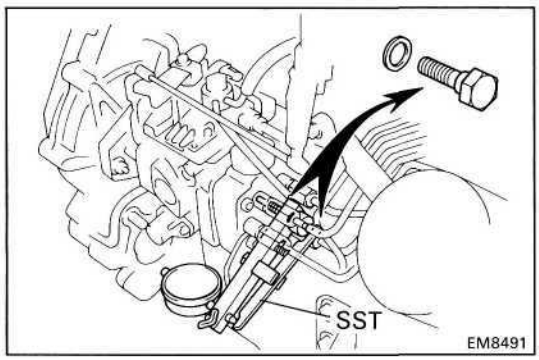

(b) Remove the plug bolt from the distributive head plug of the injection pump.

(c) Install SST (plunger stroke measuring tool) and a dial indicator to the plug bolt hole of distributive head plug.

SST 09275-54011

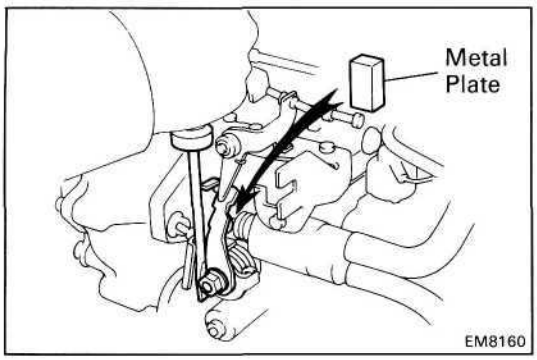

6. (w/ACSD)
RELEASE ACSD ADVANCE

(a) Using a screwdriver, turn the cold starting lever counterclockwise approx. 20°.

(b) Put a metal plate (thickness of 3.5-7.5 mm (0.135-0.295 in.)) between the cold starting lever and thermo wax plunger.

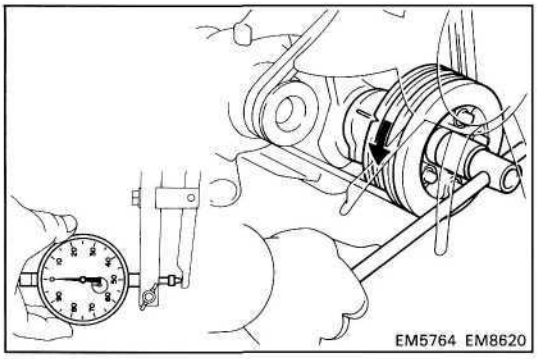

7. ADJUST INJECTION TIMING

(a) Slowly rotate the crankshaft pulley counterclockwise and set the dial indicator at 0 mm (0 in.) when the dial indicator reaches the minimum value.

NOTICE: Compared with previous four cylinder engines, the 0 mm (0 in.) position (crank angle) is reduced, so perform the operation carefully, (ex. 1PZ)

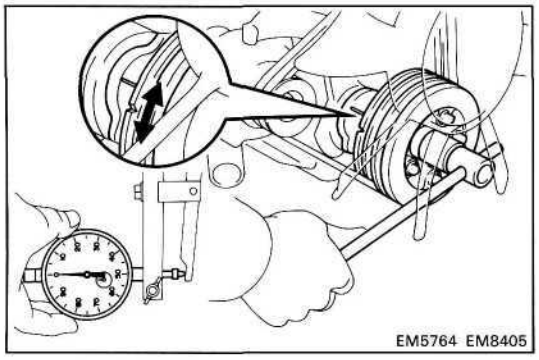

(b) Turn the crankshaft to the left and right and check that the dial indicator shows the minimum value.

NOTICE: Make sure that the minimum value is set at 0 mm (0 in.).

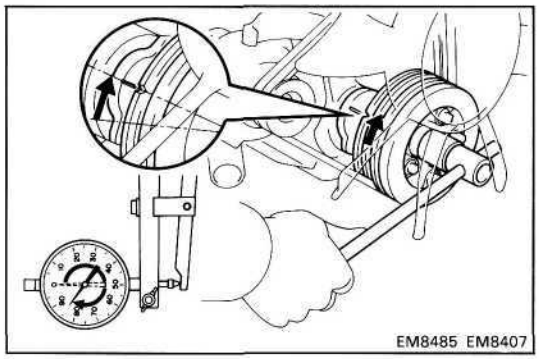

(c) Slowly rotate the crankshaft pulley clockwise until pulley groove is aligned with the timing gear cover groove.

(d) Measure the plunger stroke.

Plunger stroke:

1PZ	**0.82-0.88 mm (0.0323-0.0346 in.)**
1HZ	**1.03-1.09 mm (0.0406-0.0429 in.)**
1HD-T	**1.29-1.35 mm (0.0508-0.0531 in.)**

(e) Repeat steps (a) to (c) several times.

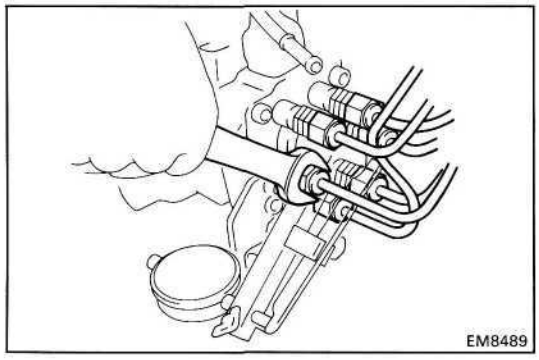

(f) Loosen the following nuts and bolt:

(1) (1PZ)
Five union nuts of injection pipes at injection pump side.

(2) (1HZ)
Six union nuts of injection pipes at injection pump side.

(3) (1HD-T)
Five remaining union nuts of injection pipes at injection pump side.

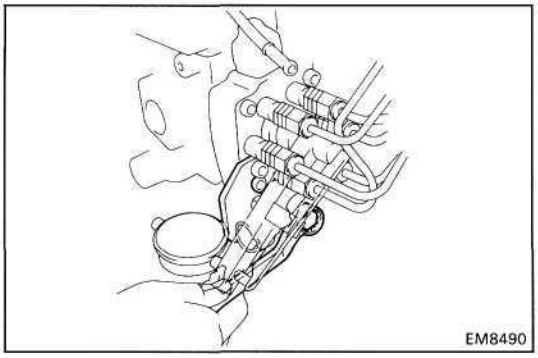

(4) Bolt holding injection pump to injection pump stay.

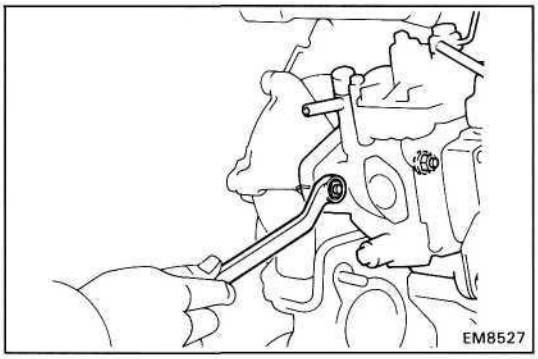

(5) Two nuts holding injection pump to timing gear case.

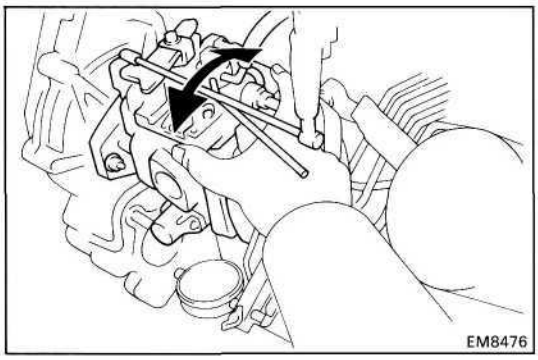

(g) Adjust plunger stroke by slightly tilting the injection pump body.

If the stroke is less than specification, tilt the pump toward the engine.

If the stroke is greater than specification, tilt the pump away from the engine.

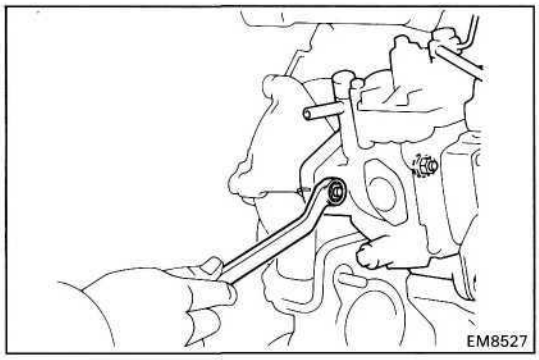

(h) Tighten the following nuts and bolt:

(1) Two nuts holding injection pump to timing gear case.

Torque: 185 kg-cm (13 ft-lb, 18 N·m)

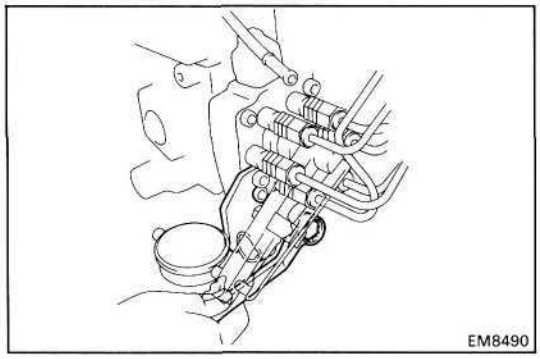

(2) Bolt holding injection pump to injection pump stay.

Torque: 700 kg-cm (51 ft-lb, 69 N·m)

- Recheck the plunger stroke.

8. (w/ ACSD)
REMOVE METAL PLATE

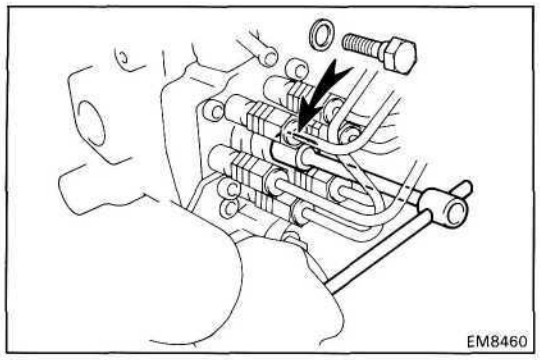

9. REMOVE SST AND DIAL INDICATOR

(a) Remove SST and the dial indicator.

SST 09275-54011

(b) Install a new gasket and the plug bolt of the distributive head plug.

Torque:

IPZ and 1HZ	**170 kg-cm (12 ft-lb, 17 N·m)**
1HD-T	**260kg-cm (19 ft-lb, 25 N·m)**

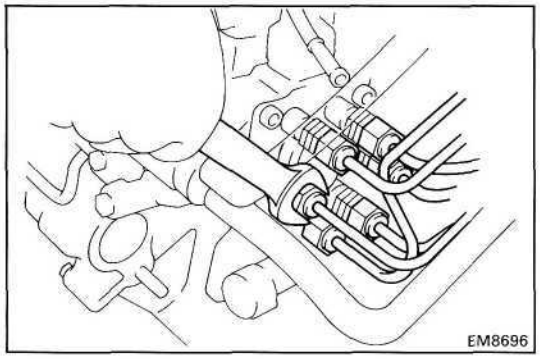

10. TORQUE UNION NUTS OF INJECTION PIPES

Torque:

1PZ and 1HZ	**150kg-cm (11 ft-lb, 15 N·m)**
1HD-T	**250kg-cm (18 ft-lb, 25 N·m)**

11. (1HD-T w/BACS)
INSTALL AIR CONTROL VALVE (ACV)

12. INSTALL TIMING BELT COVER
(See step 9 on page EM-41)

13. START ENGINE AND CHECK FOR LEAKS

ADJUSTMENT OF IDLE SPEED AND MAXIMUM SPEED

1. INITIAL CONDITIONS

(a) Engine at reach normal operating temperature
(b) Air cleaner installed
(c) All accessories switched OFF
(d) All vacuum lines properly connected
(e) Valve clearance set correctly
(f) Injection timing set correctly
(g) Transmission in N range

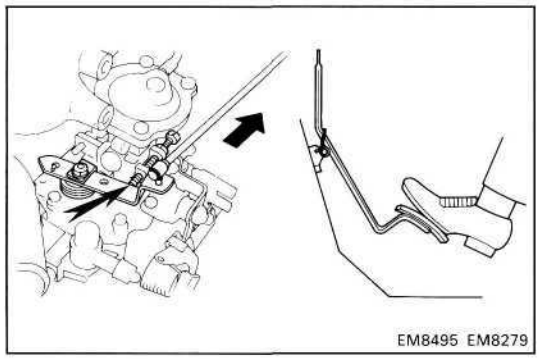
EM8495 EM8279

2. CONNECT TACHOMETER

3. ADJUST IDLE SPEED

(a) Check that the adjusting lever touches the idle speed adjusting screw when the accelerator pedal is released.

If not, adjust the accelerator linkage.

(b) Start the engine.
(c) Check the idle speed.

Idle speed:

1PZ	**600-700 rpm**
1HZ M/T	**600-700 rpm**
1HZ A/T	**660-760 rpm**
1HD-T M/T	**600-700 rpm**
1HD-T A/T	**750-850 rpm**

(d) Adjust the idle speed.

- Disconnect the accelerator linkage.
- Loosen the lock nut of the idle speed adjusting screw.
- Adjust the idle speed by turning the IDLE SPEED ADJUSTING SCREW.

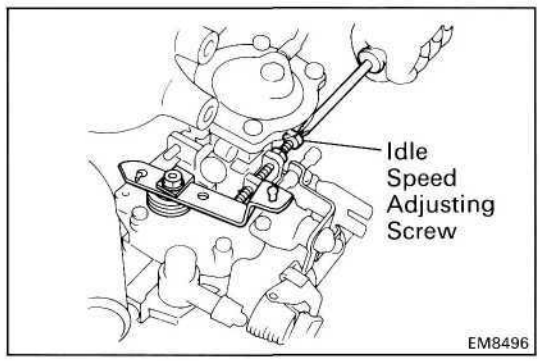

EM8496

Idle speed:

1PZ	**650 rpm**
1HZ M/T	**650 rpm**
1HZ A/T	**710 rpm**
1HD-T M/T	**650 rpm**
1HD-T A/T	**800 rpm**

- Securely tighten the lock nut, and recheck the idle speed.
- Reconnect the accelerator linkage.
- After adjustment, adjust the accelerator linkage.

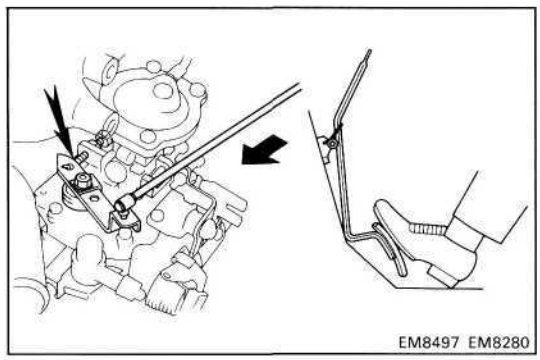
EM8497 EM8280

4. ADJUST MAXIMUM SPEED

(a) Check that the adjusting lever touches the maximum speed adjusting screw when the accelerator pedal is depressed all the way.

If not, adjust the accelerator linkage.

(b) Start the engine.

(c) Depress the accelerator pedal all the way.

(d) Check the maximum speed.

Maximum speed:

1PZ and 1 HZ	**4,500 - 4,700 rpm**
1HD-T	**4,300-4,500 rpm**

(e) Adjust the maximum speed.

- Disconnect the accelerator linkage.
- Cut out the seal wire of the maximum speed adjusting screw.
- (w/ HAC and 1HD-T)
  Using SST, loosen the lock nut of the maximum speed adjusting screw.

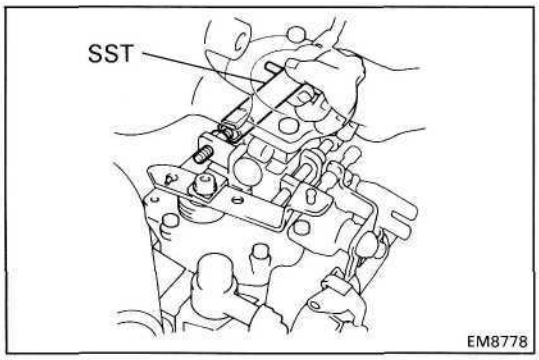

SST 09275-54020

- (w/o HAC)
  Loosen the lock nut of the maximum speed adjusting screw.

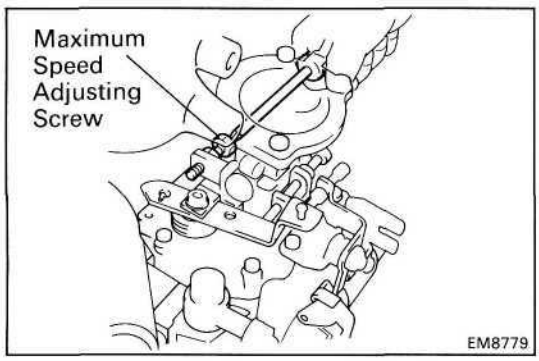

- Adjust the maximum speed by turning the MAXIMUM SPEED ADJUSTING SCREW.

Maximum speed:

1 PZ and 1 HZ	**4,600 rpm**
1HD-T	**4,400 rpm**

HINT: Adjust at idle speed. Then, raise engine speed and recheck the maximum speed.

- (w/ HAC and 1HD-T)
  Using SST, securely tighten the lock nut.

SST 09275-54020

- (w/o HAC)
  Securely tighten the lock nut.
- Recheck the maximum speed.
- Reconnect the accelerator linkage.
- After adjustment, adjust the accelerator linkage.
- Seal the maximum speed adjusting screw with a new seal wire.

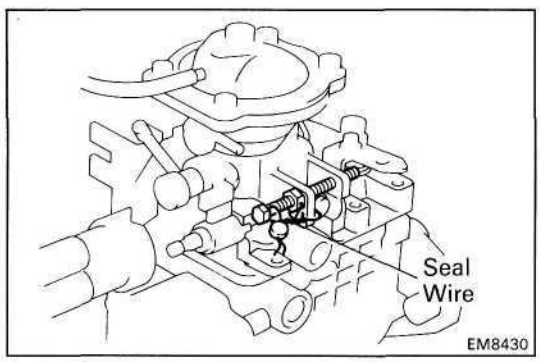

ADJUSTMENT OF AIR CONDITIONER IDLE-UP SETTING SPEED

1. INITIAL CONDITIONS

(a) Engine at reach normal operating temperature
(b) Air cleaner installed
(c) All vacuum lines properly connected
(d) Valve clearance set correctly
(e) Injection timing set correctly
(f) Transmission in N range
(g) Idle speed set correctly

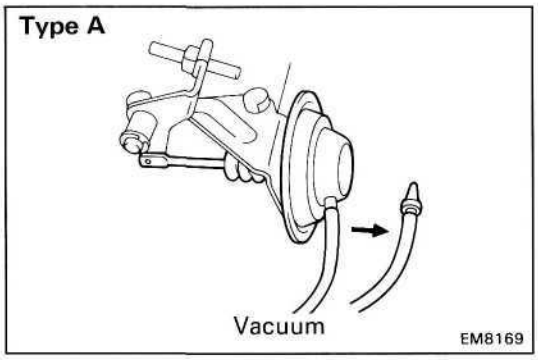

2. CONNECT TACHOMETER

3. ADJUST AIR CONDITIONER IDLE-UP SETTING SPEED

(a) Start the engine.
(b) A/C switches ON.
(c) Disconnect the vacuum hose from the idle-up actuator.
(d) Apply vacuum to the idle-up actuator.
(e) Race the engine to 2,500 rpm for a few seconds, release the throttle and check the idle-up setting speed.

A/C idle-up setting speed: 950 rpm

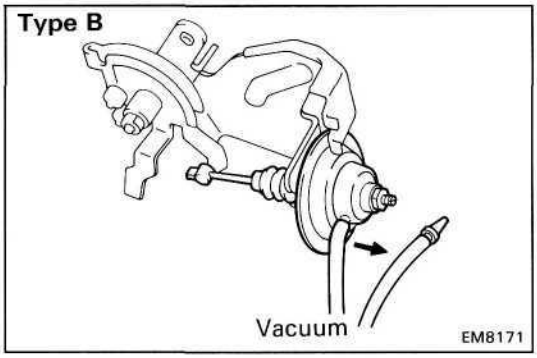

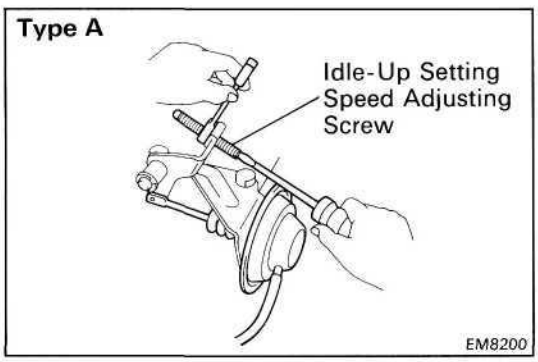

(f) Adjust the idle-up setting speed by turning the IDLE-UP SETTING SPEED ADJUSTING SCREW.
(g) Race the engine to 2,500 rpm for a few seconds, release the throttle and recheck the A/C idle-up setting speed.
(h) Reconnect the vacuum hose to the idle-up actuator.

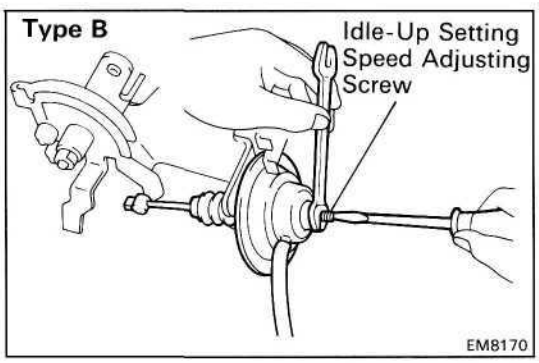

COMPRESSION CHECK

HINT: If there is lack of power, excessive oil consumption or poor fuel economy, measure the compression pressure.

1. WARM UP AND STOP ENGINE

Allow the engine to reach normal operating temperature.

2. DISCONNECT INJECTION PUMP (FUEL CUT SOLENOID) CONNECTOR

3. REMOVE GLOW PLUGS
(See step 9 on page EM-57)

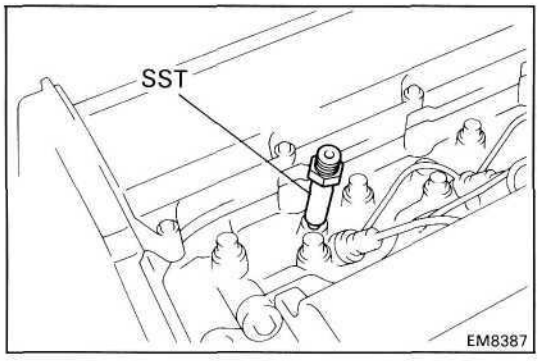

4. CHECK CYLINDER COMPRESSION PRESSURE

(a) Install SST (attachment) to the glow plug hole.

SST 09992-00024 (09992-00160)

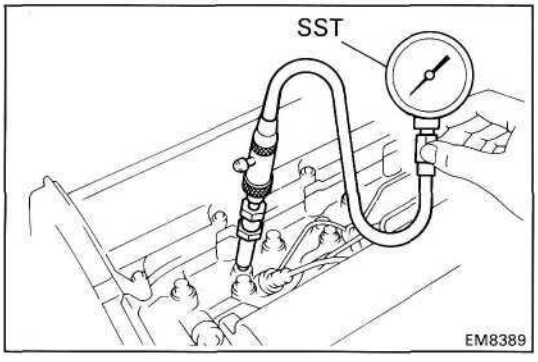

(b) Connect SST (compression gauge) to SST (attachment).

SST 09992-00024 (09992-001 60, 09992-00211)

(c) Fully open the throttle valve.

(d) While cranking the engine, measure the compression pressure.

HINT: Always use a fully charged battery to obtain engine revolution of 250 rpm or more.

(e) Repeat steps (a) through (d) for each cylinder.

NOTICE: This measurement must be done in as short a time as possible.

Compression pressure:
IPZ and 1HZ
37.0 kg/cm^2 (526 psi, 3,628 kPa) or more
1HD-T
35.0 kg/cm^2 (498 psi, 3,432 kPa) or more

Minimum pressure:
IPZ and 1HZ
27.0 kg/cm^2 (384 psi, 2,648 kPa) or more
1HD-T
25.0 kg/cm^2 (356 psi, 2,452 kpa) or more

Difference between each cylinder:
5.0 kg/cm^2 (71 psi, 490 kPa) or less

(f) If the cylinder compression in one or more cylinders is low, pour a small amount of engine oil into the cylinder through the glow plug hole and repeat steps (a) through (d) for the cylinder with low compression.

- If adding oil helps the compression chances are that the piston rings and/or cylinder bore are worn or damaged.
- If pressure stays low, a valve may be sticking or seating improperly, or there may be leakage past the gasket.

5. REINSTALL GLOW PLUGS
(See step 11 on page EM-81)

6. RECONNECT INJECTION PUMP (FUEL CUT SOLENOID) CONNECTOR

TIMING BELT

HINT: If replacing the timing belt before the timing belt warning light comes on, (light comes on after 100,000 km of driving), be sure to reset the timing belt counter of the speedometer to zero.

COMPONENTS

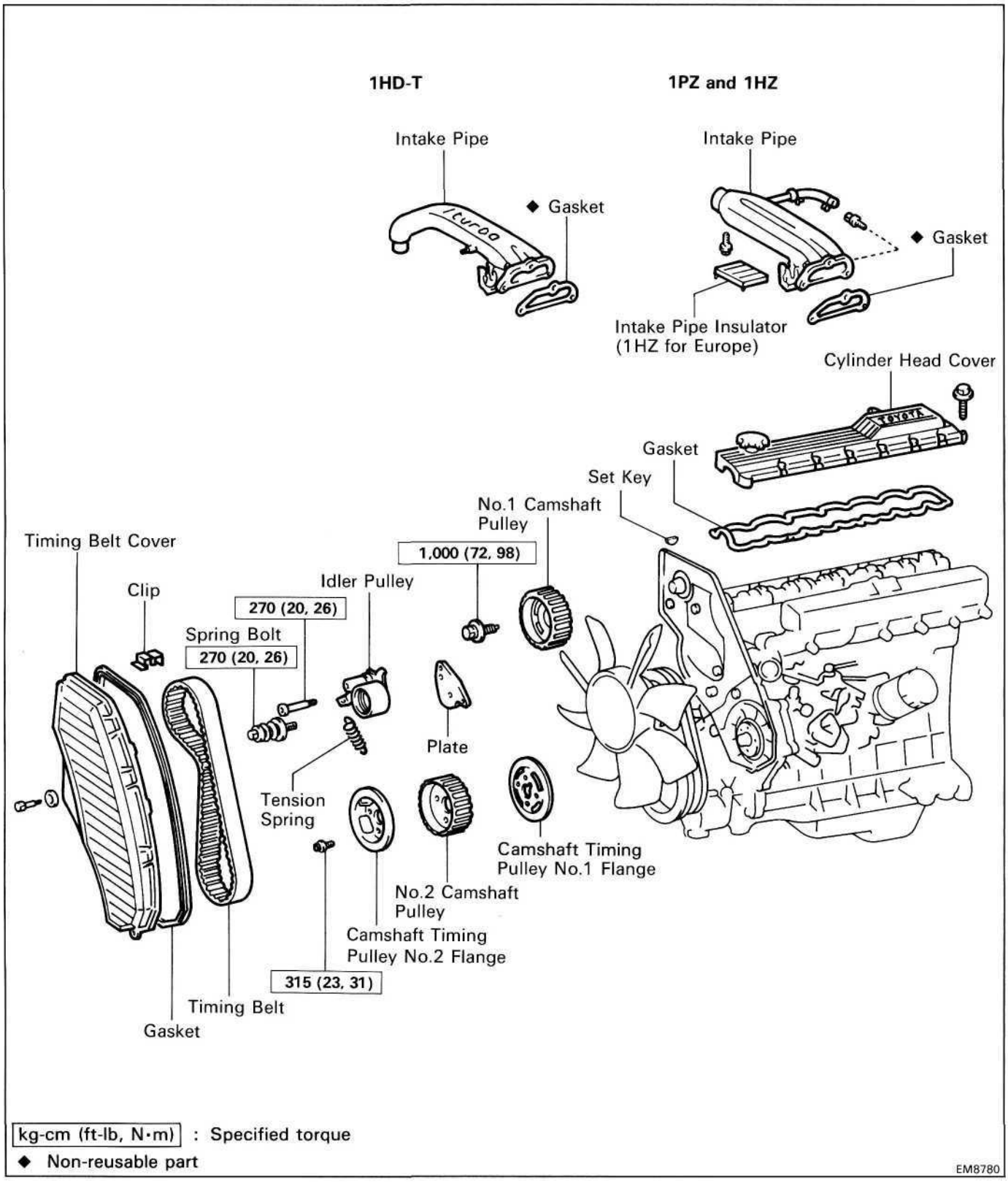

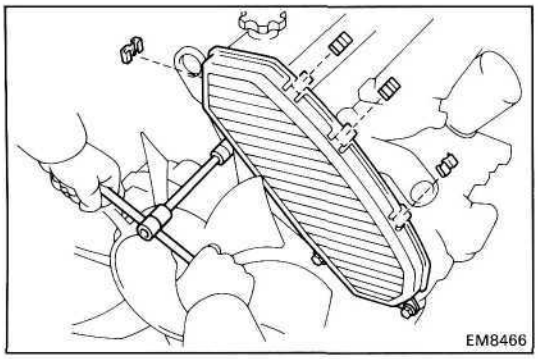

REMOVAL OF TIMING BELT

(See page EM-32)

1. REMOVE TIMING BELT COVER

Remove the three seal washer, bolts, four clips, timing belt cover and gasket.

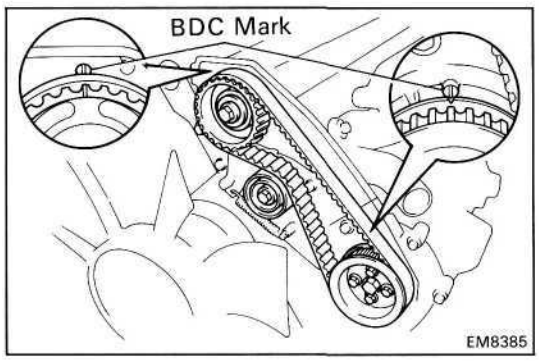

2. SET NO.1 CYLINDER TO BDC

Turn the crankshaft pulley clockwise, set the No.1 and No.2 camshaft pulley grooves at each position (BDC mark).

HINT: By positioning the No.1 cylinder at BDC, interference between the valve and piston is avoided, even if the camshaft rotates.

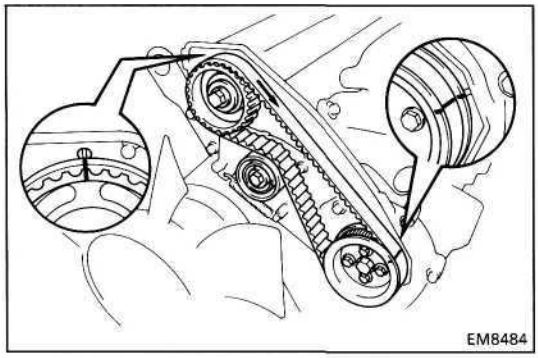

3. REMOVE TIMING BELT

HINT: If re-using the timing belt, draw a direction arrow on the timing belt (in direction of engine revolution), and place matchmarks on the pulleys and timing belt.

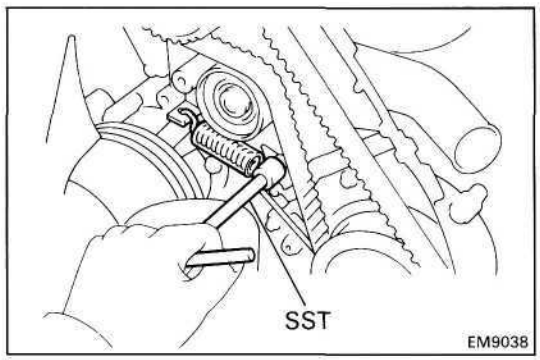

(a) Using SST, remove the tension spring.

SST 09717-20010

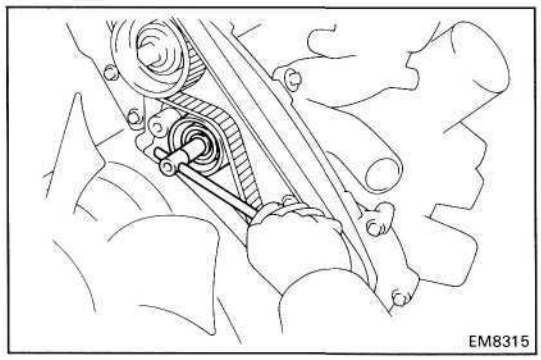

(b) Remove the spring bolt of the timing belt idler.

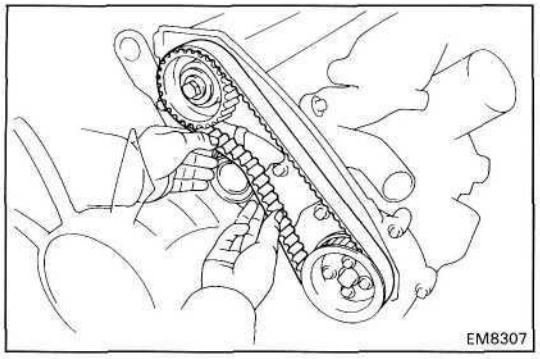

(c) Remove the timing belt.

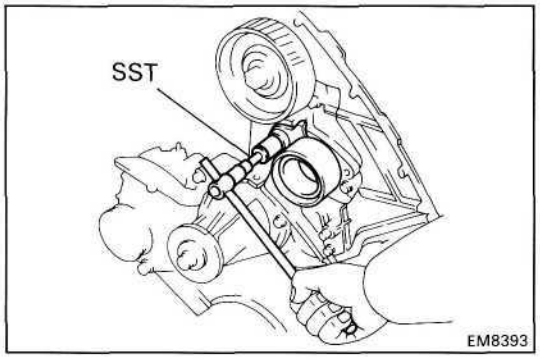

4. REMOVE TIMING BELT IDLER PULLEY

Using SST, remove the bolt, timing belt idler pulley and plate.

SST 09923-00020

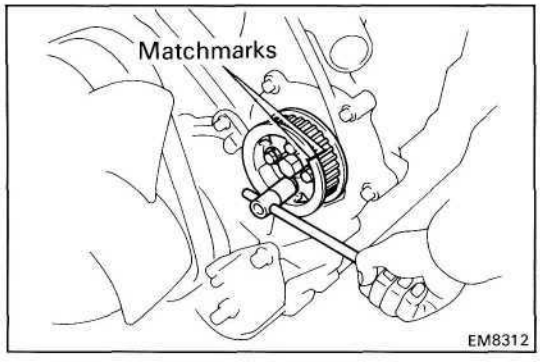

5. REMOVE NO.2 CAMSHAFT TIMING PULLEY

(a) Place matchmarks on the camshaft timing pulley No.2 flange and No.2 camshaft timing pulley.

(b) Remove the four bolts, camshaft timing pulley No.2 flange, No.2 camshaft timing pulley and camshaft timing pulley No.1 flange.

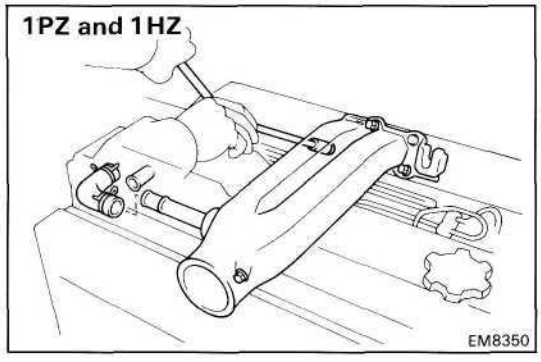

6. REMOVE INTAKE PIPE (IPZancMHZ)

(a) Disconnect the PCV hose.

(b) Remove the four bolts, intake pipe and gasket.

(c) (1HZ (Eourope))
Remove the intake pipe insulator.

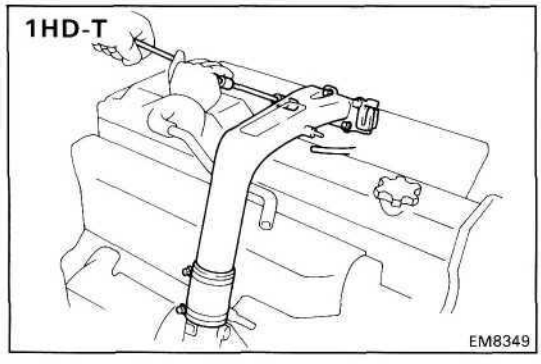

(1HD-T)

(a) Disconnect the turbo vacuum hose.

(b) Loosen the air hose clamp bolt.

(c) Remove the three bolts, intake pipe and gasket.

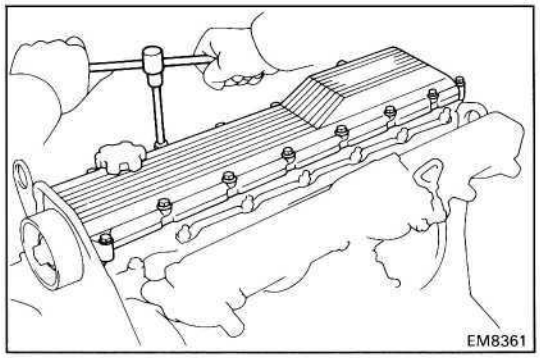

7. REMOVE CYLINDER HEAD COVER

Remove the twelve bolts (1PZ) or fourteen bolts (1HZ and 1HD-T), two nuts, cylinder head cover and gasket.

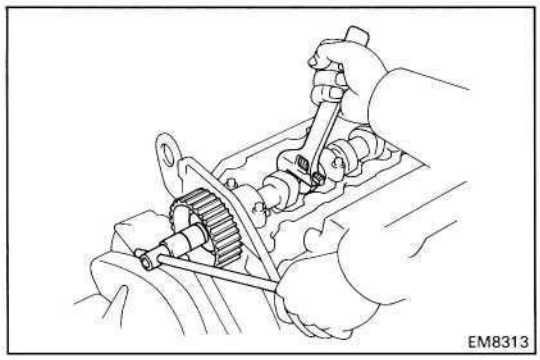

8. REMOVE NO.1 CAMSHAFT TIMING PULLEY

(a) Hold the hexagonal wrench head portion of the camshaft with a wrench, and remove the No.1 camshaft timing pulley bolt.

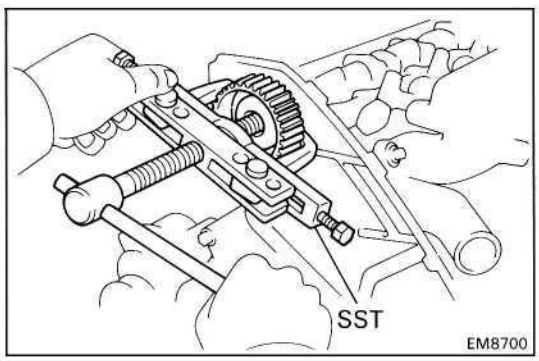

(b) Using SST, remove the No.1 camshaft timing pulley.

SST 09950-20017

(c) Remove the set key.

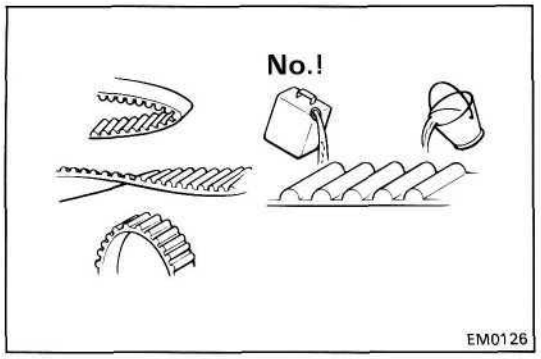

INSPECTION OF TIMING BELT COMPONENTS

1. INSPECT TIMING BELT

NOTICE:

- **Do not bend, twist or turn the timing belt inside out.**
- **Do not allow the timing belt to come into contact with oil, water or steam.**
- **Do not utilize timing belt tension when installing or removing the mount bolt of the camshaft timing pulley.**

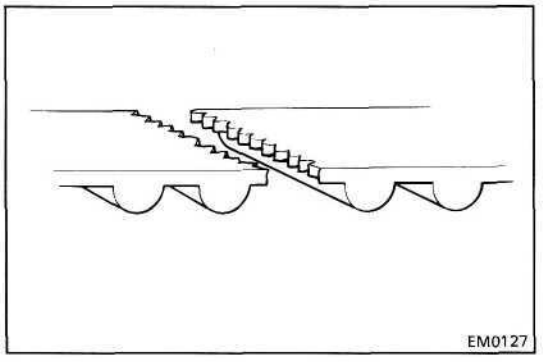

If there are any defects as shown in the illustration, check the following points:

(a) Premature parting

- Check for proper installation.
- Check the timing belt cover gasket for damage and, check for proper installation.

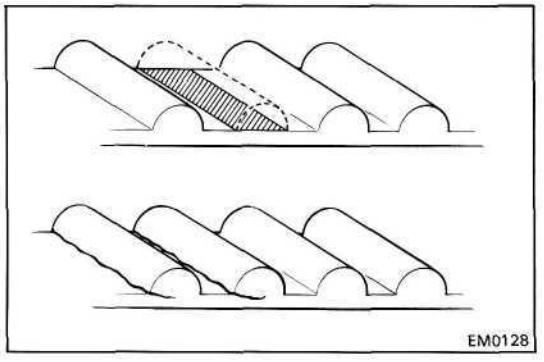

(b) If the belt teeth are cracked or damaged, check to see if the camshaft is locked.

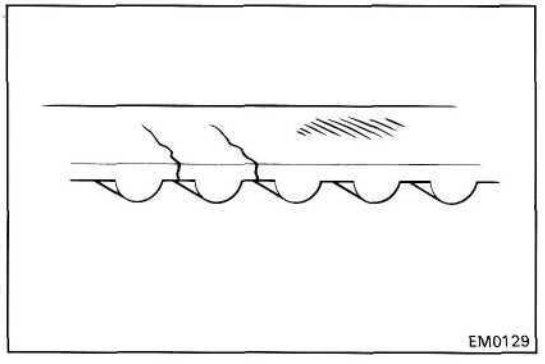

(c) If there are cracks or noticeable wear on the belt face, check to see if there are nicks on one side of the idler pulley lock.

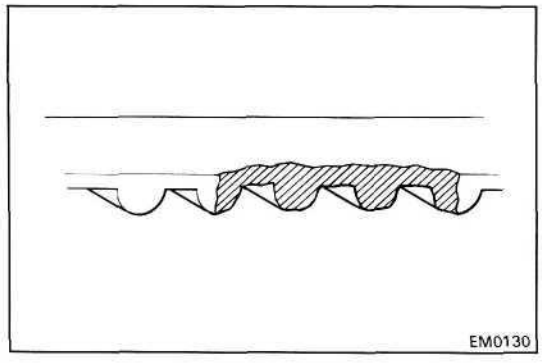

(d) If there is wear or damage on only one side of the belt, check the alignment of the each pulley.

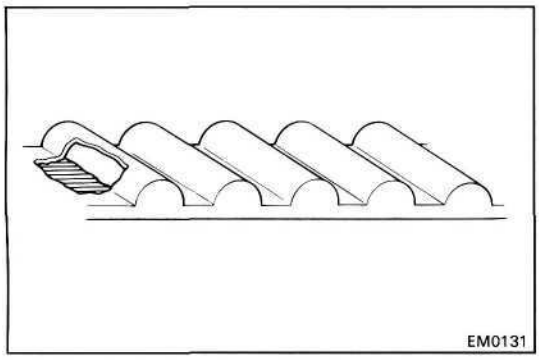

(e) If there is noticeable wear on the belt teeth, check timing belt cover for damage and check for correct gasket installation. Check for foreign material on the pulley teeth.

If necessary, replace the timing belt.

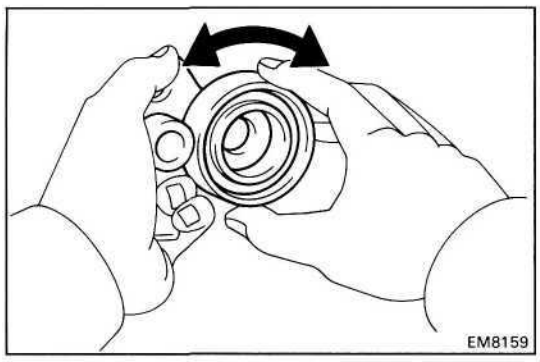

2. INSPECT IDLER PULLEY

(a) Check the turning smoothness of the idler pulley.

If necessary, replace the idler pulley.

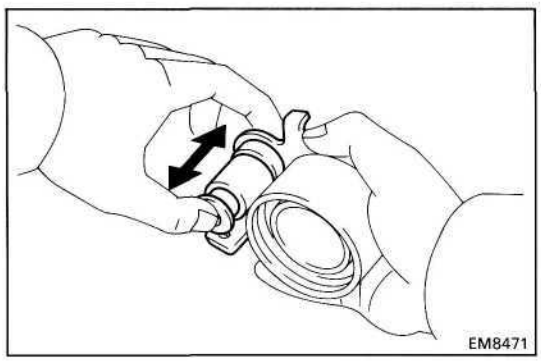

(b) Check that the idler pulley and the pulley bolt slide smoothly.

If necessary, replace the idler pulley.

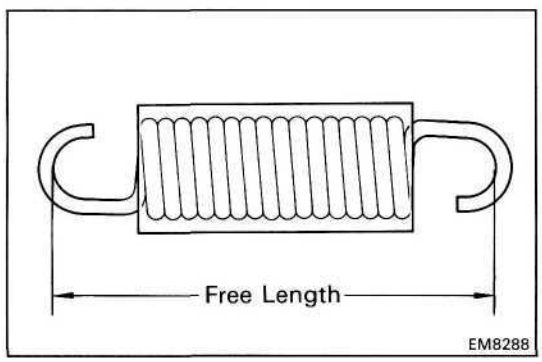

3. INSPECT TENSION SPRING

(a) Measure the free length of the tension spring.

Free length: 72.7 mm (2.862 in.)

If the free length is not as specified, replace the tension spring.

(b) Measure the tension of the tension spring at the specified installed length.

Installed tension:
23-28 kg (50.7-61.7 lb, 225-275 N·m)
at 90.1 mm (3.547 in.)

If the installed tension is not as specified, replace the tension spring.

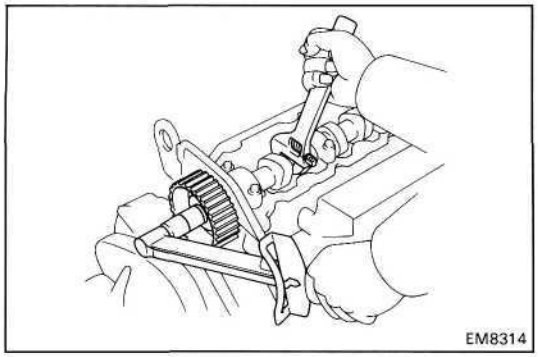

INSTALLATION OF TIMING BELT

(See page EM-32)

1. INSTALL NO.1 CAMSHAFT TIMING PULLEY

(a) Install the set key to the key groove of the camshaft.

(b) Align the pulley set key with the key groove of the No.1 camshaft timing pulley, slide the No.1 camshaft timing pulley.

(c) Temporarily install the No.1 timing pulley bolt.

(d) Hold the hexagonal wrench head portion of the camshaft with a wrench, and tighten the No.1 camshaft timing bolt.

Torque: 1,000 kg-cm (72 ft-lb, 98 N·m)

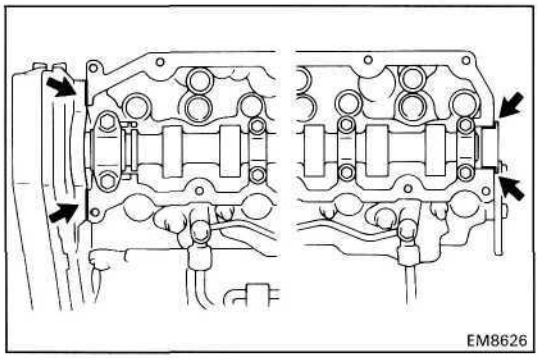

2. INSTALL CYLINDER HEAD COVER

(a) Remove any old packing (FIPG) material.

(b) Apply seal packing to the cylinder head as shown in the illustration.

Seal packing: Part No.08826-00080 or equivalent

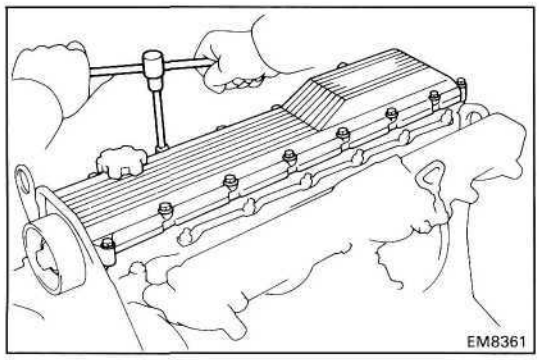

(c) Install the gasket to the cylinder head cover.

(d) Install the cylinder head cover with the twelve bolts (1PZ) or fourteen bolts (1 HZ and 1HD-T) and two nuts.

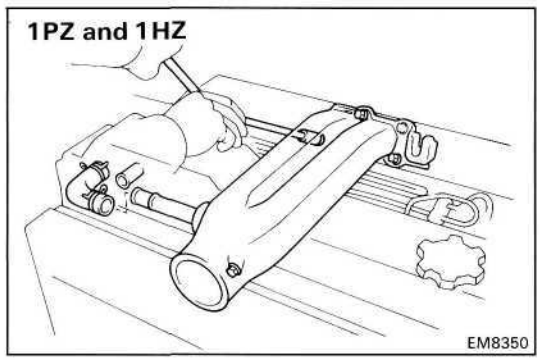

3. INSTALL INTAKE PIPE
(1PZand1HZ)

(a) (1HZ (Eourope))
Place the intake pipe insulator on the cylinder head cover.

(b) Install a new gasket and intake pipe with the four bolts.

(c) Connect the PCV hose.

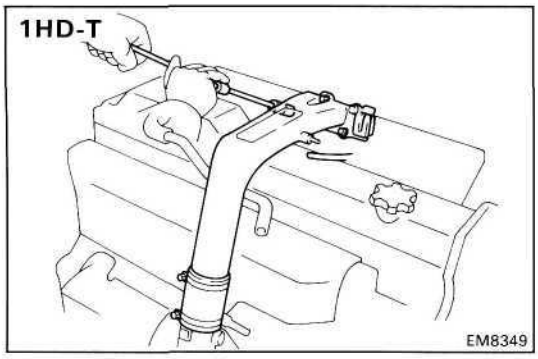

(1HD-T)

(a) Install a new gasket and intake pipe with the three bolts.

(b) Connect the air hose and tighten the hose clamp.

(c) Connect the turbo vacuum hose.

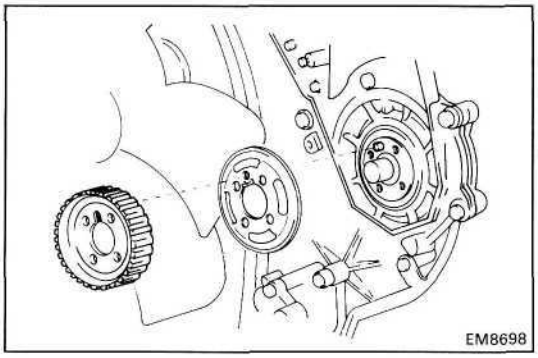

4. INSTALL N0.2 CAMSHAFT TIMING PULLEY

(a) Align the knock pin of the injection pump drive gear with the knock pin hole of the camshaft timing pulley No.1 flange and cutout portion of the No.2 camshaft timing pulley.

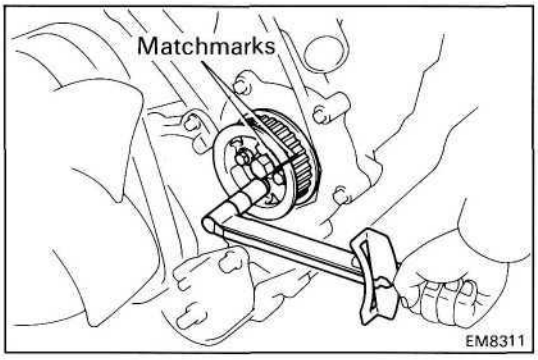

(b) Align the matchmarks of the No.2 camshaft timing pulley and camshaft timing pulley No.2 flange, and install and tighten the four bolts.

Torque: 315 kg-cm (23 ft-lb, 31 N-m)

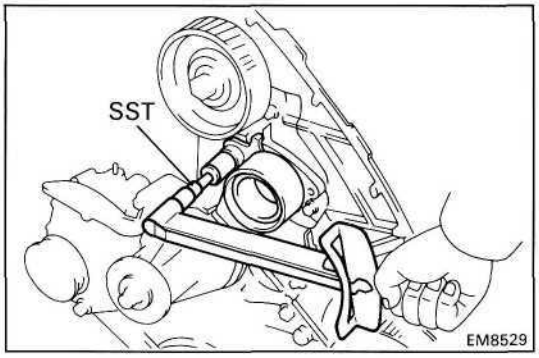

5. INSTALL TIMING BELT IDLER PULLEY

Using SST, install the plate and timing belt idler pulley with the bolt.

SST 09923-00020

Torque: 270 kg-cm (20 ft-lb, 26 N·m)

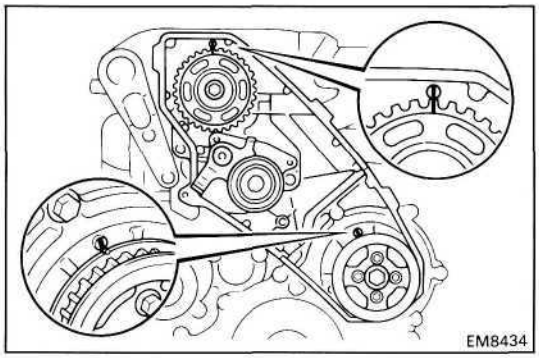

6. SET NO.1 CYLINDER TO BDC

Set the timing pulleys at each position.

NOTICE: When turning the crankshaft, the valve heads will hit against the piston top. So do not turn it more than necessary.

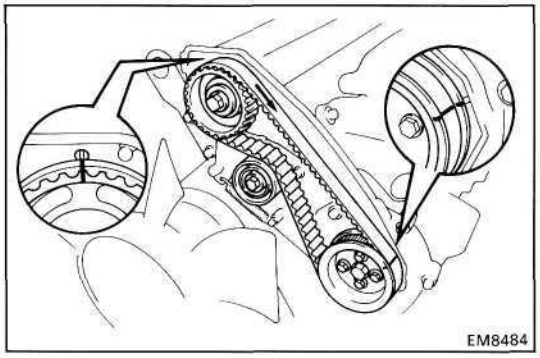

7. INSTALL TIMING BELT

NOTICE: The engine should be cold.

HINT: If re-using the timing belt, align the points marked during removal, and install the timing belt with the arrow pointing in the direction of engine revolution.

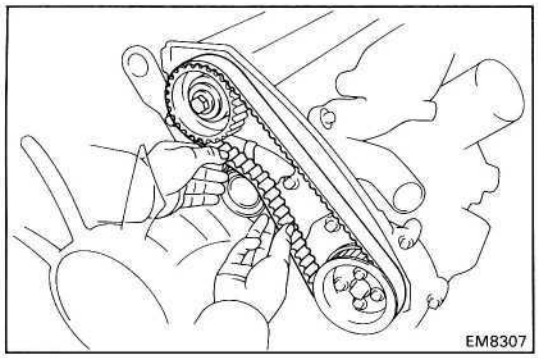

(a) Remove any oil or water on each pulley, and keep them clean.

(b) Install the timing belt in following order:

(1) No.2 camshaft timing pulley

(2) No.1 camshaft timing pulley

(3) Timing belt idler pulley

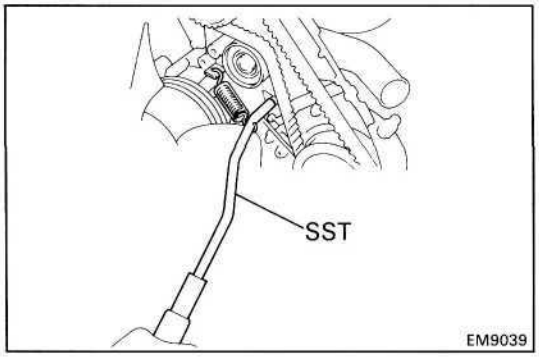

(c) Using SST, install the tension spring.

SST 09718-20010

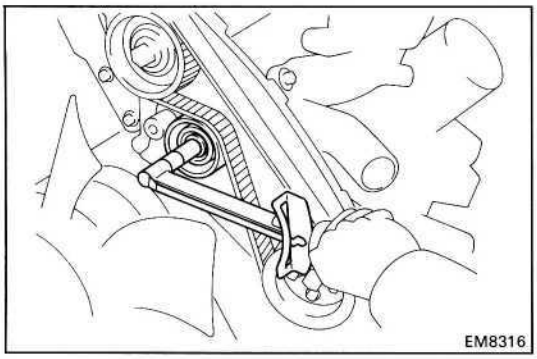

(d) Install and torque the spring bolt of the timing belt idler.

Torque: 270 kg-cm (20 ft-lb, 26 N·m)

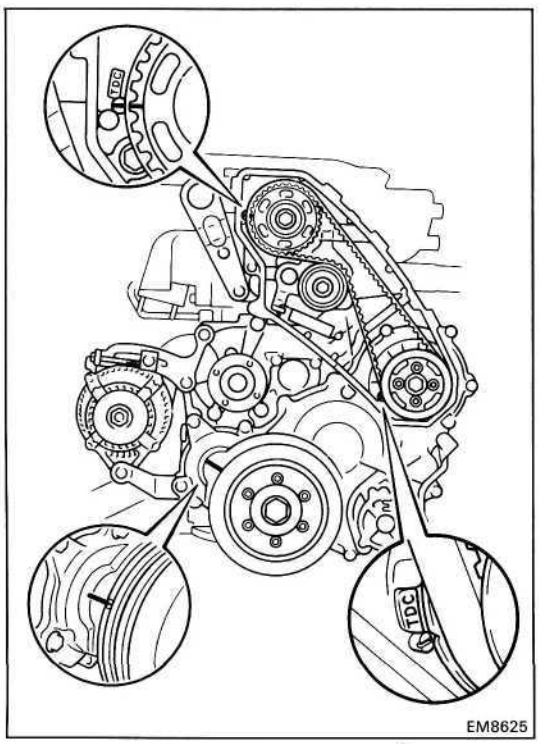

8. CHECK VALVE TIMING

Turn the crankshaft pulley clockwise and check that each pulley align with the timing marks (TDC mark) as shown in the illustration.

If the marks do not align, remove the timing belt and reinstall it.

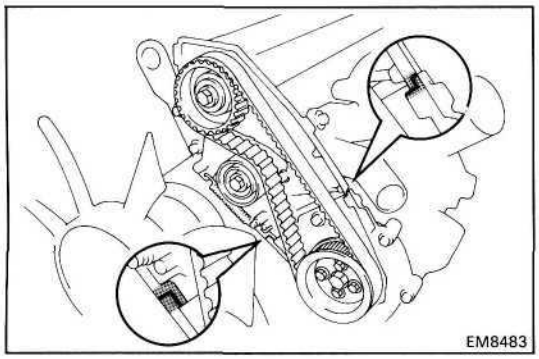

9. INSTALL TIMING BELT COVER

(a) Remove any old packing (FIPG) material.

(b) Apply seal packing to the camshaft oil seal retainer and timing gear cover as shown in the illustration.

Seal packing: Part No.08826-00080 or equivalent

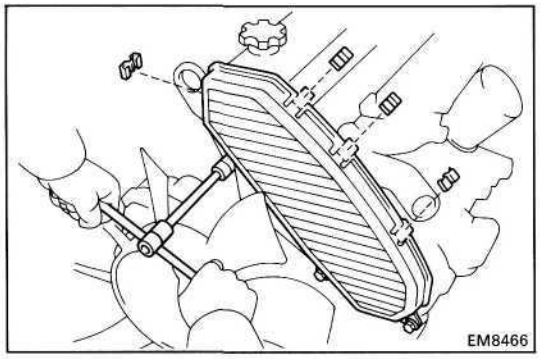

(c) Install the gasket to the timing belt cover.

(d) Install the timing belt cover with the three seal washers, three bolts and four clips.

TIMING GEARS

COMPONENTS

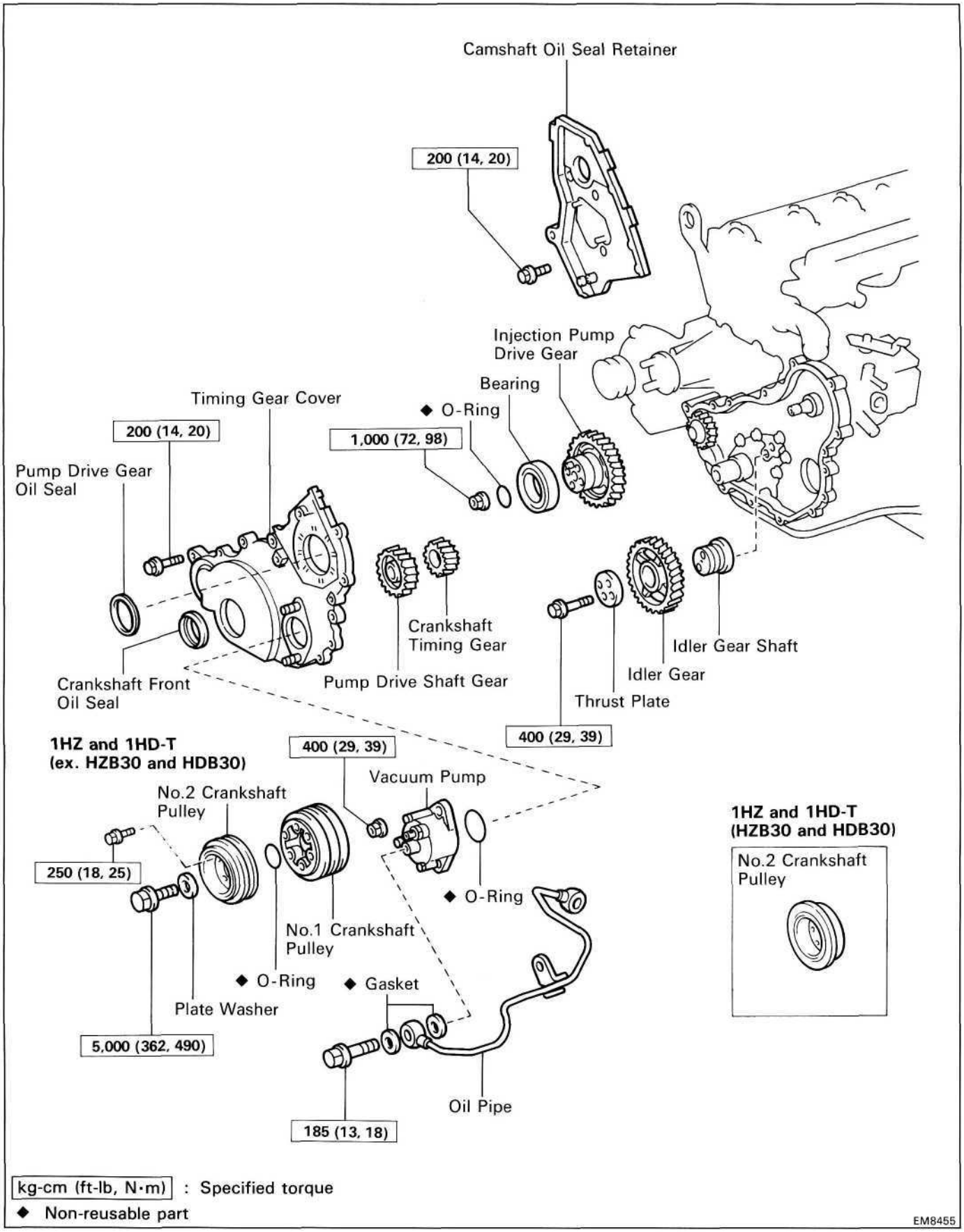

REMOVAL OF TIMING GEARS

(See page EM-42)

1. **REMOVE DRIVE BELT, FAN AND WATER PUMP PULLEY**
   (See step 2 on page CO-7)

2. **REMOVE TIMING BELT AND PULLEYS**
   (See page EM-32)

3. **REMOVE CAMSHAFT OIL SEAL RETAINER**
   (See step 14 on page EM-59)

4. **REMOVE OIL PIPE**

   (a) Remove the two union bolts and four gaskets.

   (b) Remove the bolt and oil pipe.

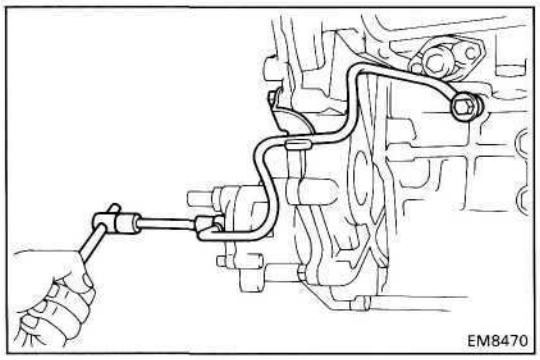

5. **REMOVE VACUUM PUMP**

   (a) Remove the two nuts and vacuum pump.

   (b) Remove the O-ring.

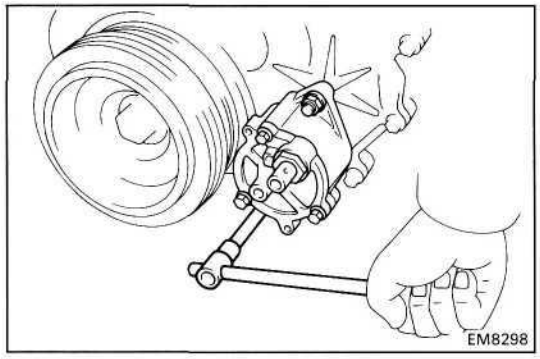

6. **(IHZandiHD-T)**
   REMOVE NO.2 CRANKSHAFT PULLEY

   Remove the six bolts and No.2 crankshaft pulley.

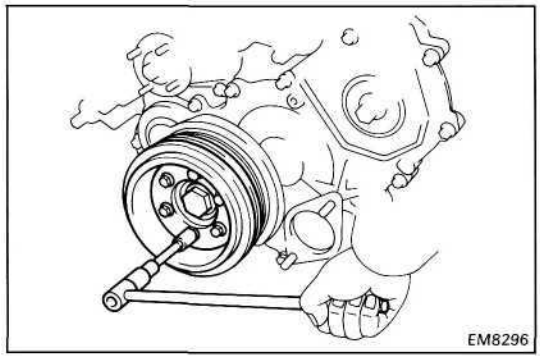

7. **REMOVE NO.1 CRANKSHAFT PULLEY**

   (a) Using SST, remove the pulley bolt and plate.

   SST 0921 3-58011 and 09330-00021

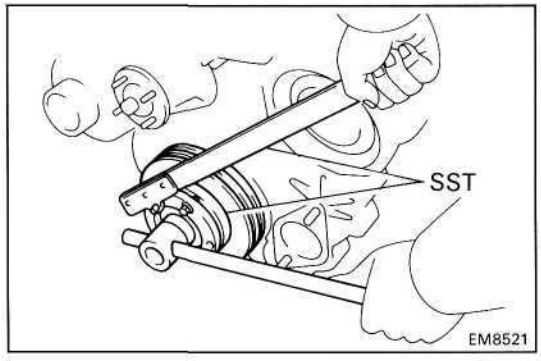

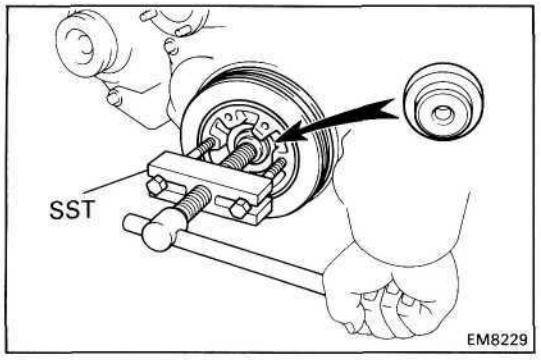

(b) Using SST, remove the No.1 crankshaft pulley.

SST 09213-60017 (09213-00020, 09213-00030, 09213-00060) and 09950-20017

(c) Remove the O-ring from the No.1 crankshaft pulley.

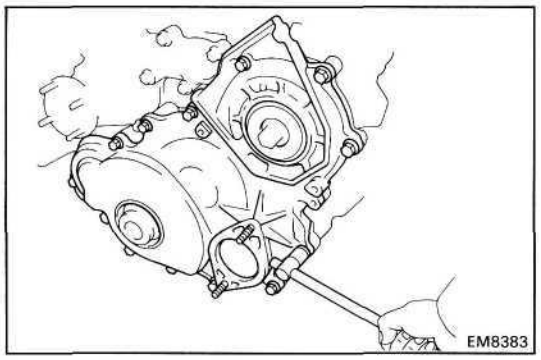

8. REMOVE TIMING GEAR COVER

(a) Remove the fourteen bolts.

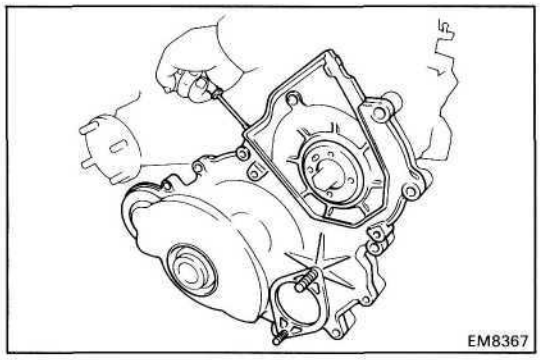

(b) Pry out the timing gear cover.

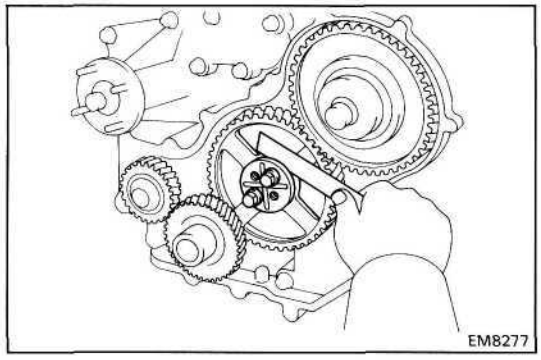

9. CHECK THRUST CLEARANCE OF IDLER GEAR

Using a thickness gauge, measure the thrust clearance.

Standard thrust clearance: 0.05-0.15 mm (0.0020-0.059 in.)

Maximum thrust clearance: 0.30 mm (0.0118 in.)

If the thrust clearance is greater than maximum, replace the thrust plate. If necessary, replace the idler gear and/or idler gear shaft.

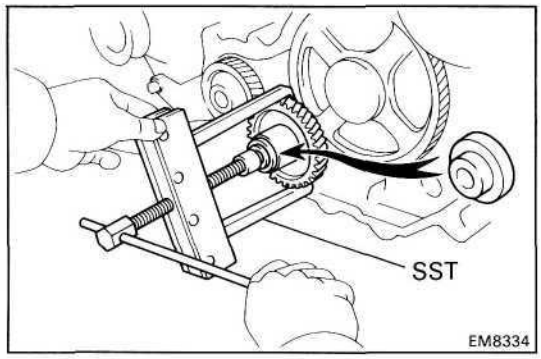

10. REMOVE PUMP DRIVE SHAFT GEAR

Using SST, remove the pump drive shaft gear.

SST 09213-36020 and 09950-20017

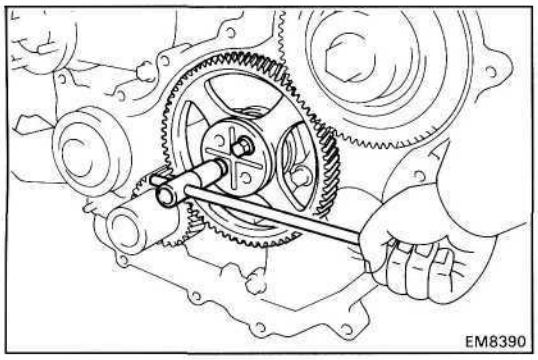

11. REMOVE IDLER GEAR

Remove the two bolts, thrust plate, idler gear and idler gear shaft.

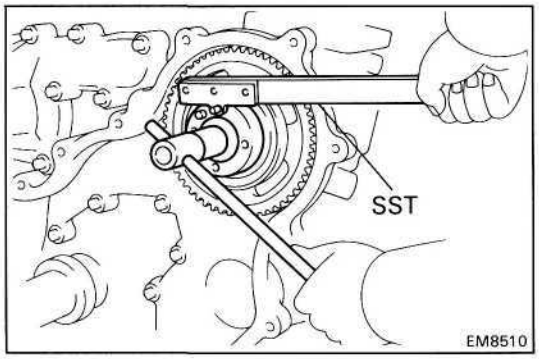

12. REMOVE INJECTION PUMP DRIVE GEAR

(a) Using SST, remove the injection pump drive gear set nut.

SST 09330-00021

(b) Remove the O-ring.

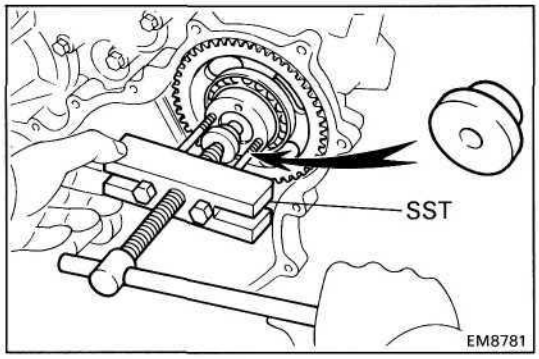

(c) Using SST, remove the injection pump drive gear.

SST 09213-60017 (09213-00020, 09213-00030, 09213-00060) and 09950-20017

NOTICE:

- **Tighten the two bolts of SST more than 8 mm (0.31 in.)**
- **Set the SST so that it is balanced.**

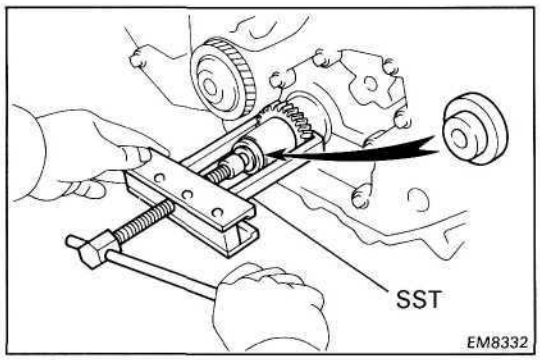

13. REMOVE CRANKSHAFT TIMING GEAR

Using SST, remove the crankshaft timing gear.

SST 09213-36020 and 09950-20017

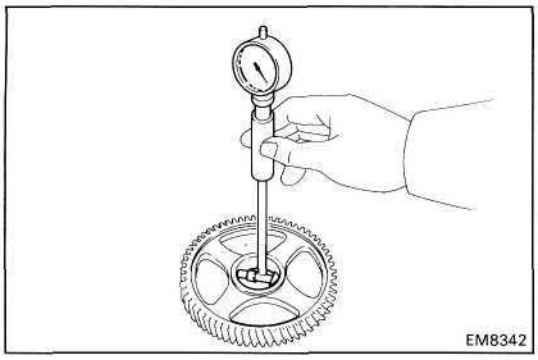

INSPECTION OF TIMING GEARS

1. INSPECT IDLER GEAR

(a) Using a cylinder gauge, measure the inside diameter of the idler gear.

Idler gear inside diameter: 45.000-45.025 mm (1.7717-1.7726 in.)

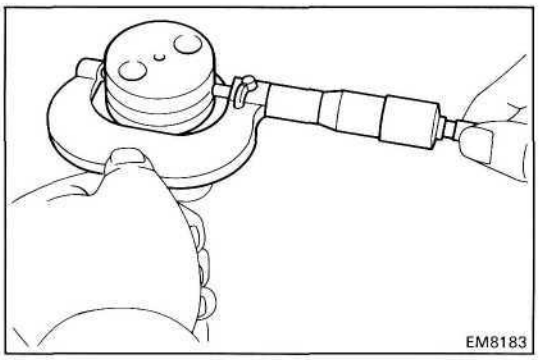

(b) Using a micrometer, measure the diameter of the idler gear shaft.

Idler gear shaft diameter: 44.950-44.975 mm (1.7697-1.7707 in.)

(c) Subtract the idler gear shaft diameter measurement from the idler gear inside diameter measurement.

Standard oil clearance: 0.025-0.075 mm (0.0010-0.0030 in.)

Maximum oil clearance: 0.20 mm (0.0079 in.)

If the clearance is greater than maximum, replace the gear and shaft.

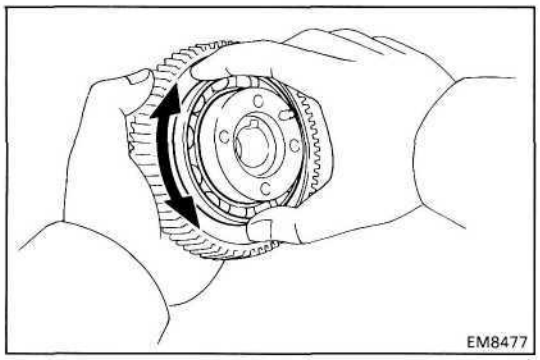

2. INSPECT INJECTION PUMP DRIVE GEAR BEARING

Check that bearing is not rough or worn.

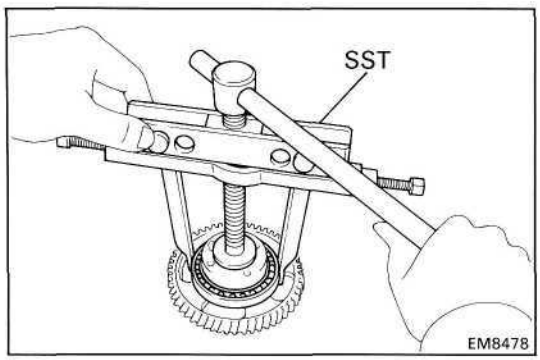

3. IF NECESSARY, REPLACE INJECTION PUMP DRIVE GEAR BEARING

A. Remove bearing

Using SST, remove the bearing.

SST 09950-20017

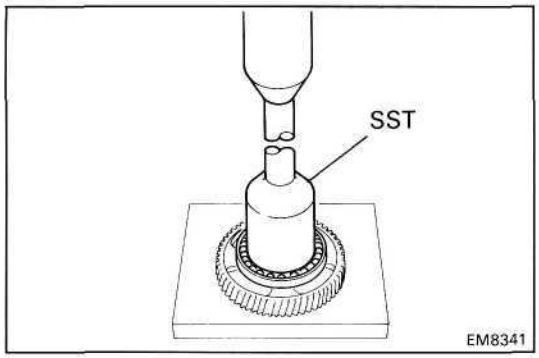

B. Install bearing

Using SST and a press, press in a new bearing.
SST 09214-76011

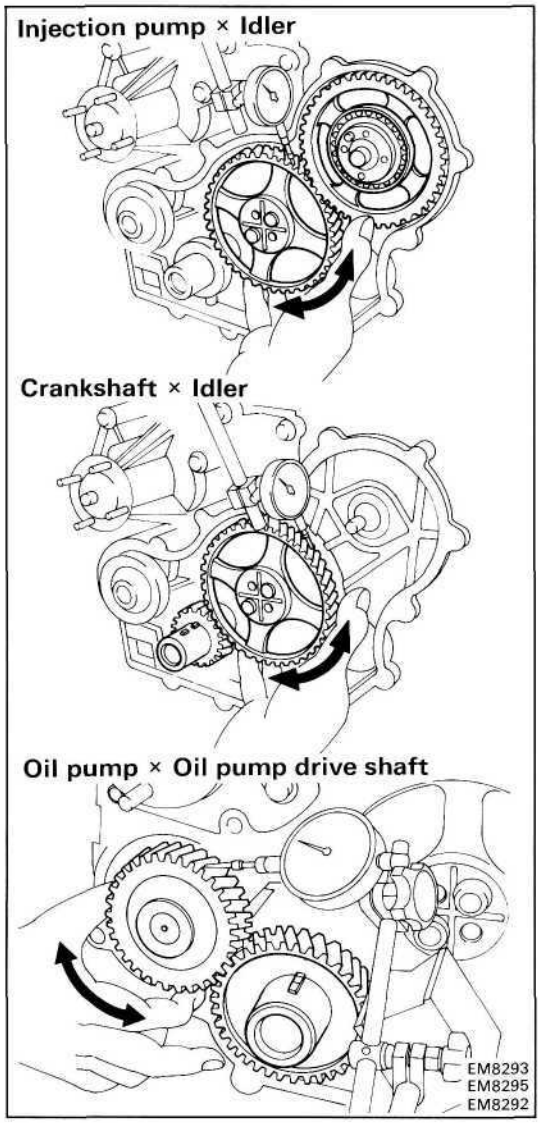

4. CHECK BACKLASH OF TIMING GEARS

Using a dial indicator, measure the backlash.

Standard gear backlash: 0.05-0.15 mm (0.0020-0.0060 in.)

Maximum gear backlash: 0.30 mm (0.0118 in.)

If the gear backlash is greater than maximum, replace the gears as a set.

REPLACEMENT OF CRANKSHAFT FRONT OIL SEAL

HINT: There are two methods (A and B) to replace the oil seal as follows:

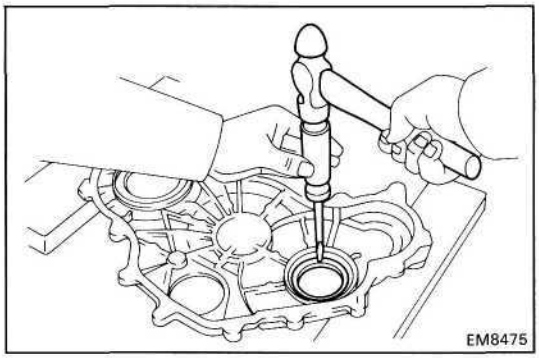

REPLACE CRANKSHAFT FRONT OIL SEAL

A. If timing gear cover is removed from cylinder block:

(a) Using a screwdriver and hammer, tap out the oil seal.

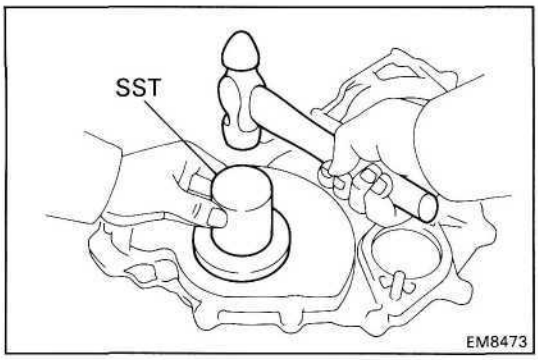

(b) Using SST and a hammer, tap in a new oil seal until its surface is flush with the timing gear cover edge.

SST 09223-78010

(c) Apply MP grease to the oil seal lip.

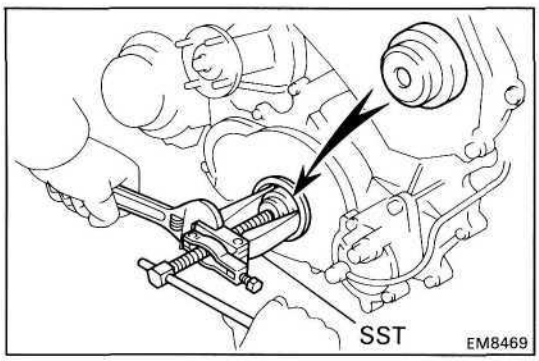

B. If timing gear cover is installed to the cylinder block:

(a) Using SST, remove the oil seal.

SST 09308-10010 and 09950-20017

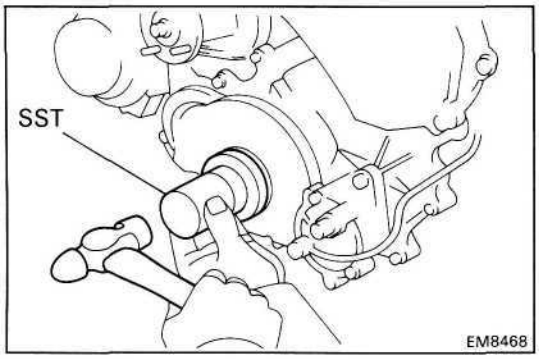

(b) Apply MP grease to a new oil seal lip.

(c) Using SST and a hammer, tap in the oil seal until its surface is flush with the timing gear cover edge.

SST 09223-78010

REPLACEMENT OF INJECTION PUMP DRIVE GEAR OIL SEAL

HINT: There are two methods (A and B) to replace the oil seal as follows:

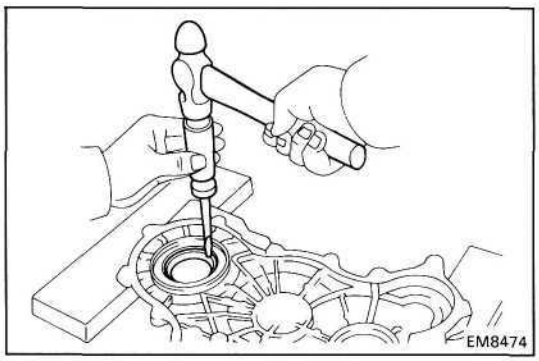

REPLACE INJECTION PUMP DRIVE GEAR OIL SEAL

A. If timing gear cover is removed from cylinder block:

(a) Using a screwdriver and hammer, tap out the oil seal.

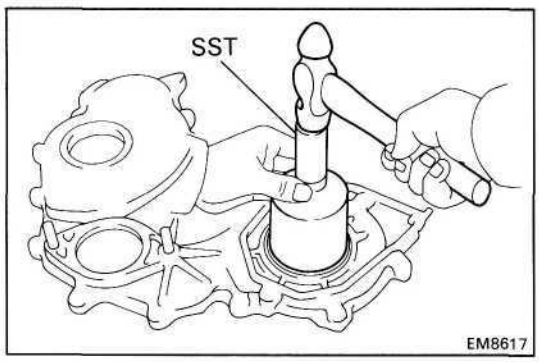

(b) Using SST and a hammer, tap in a new oil seal until its surface is flush with the timing gear cover edge.

SST 09214-76011

(c) Apply MP grease to the oil seal lip.

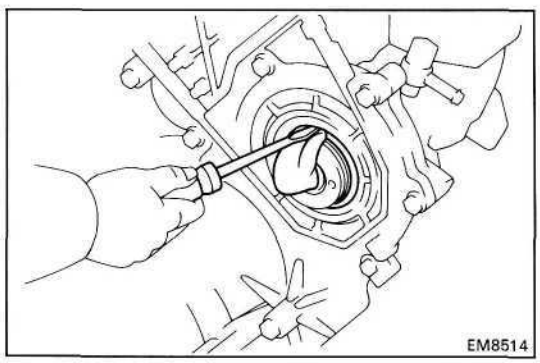

B. If timing gear cover is installed to the cylinder block:

(a) Using a screwdriver, pry out the oil seal.

NOTICE: Be careful not to damage the injection pump drive gear. Tape the screwdriver tip.

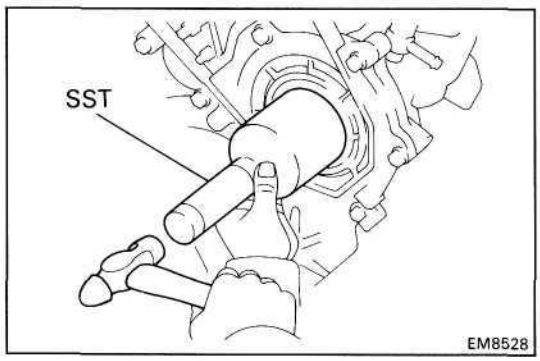

(b) Apply MP grease to the oil seal lip.

(c) Using SST and a hammer, tap in a new oil seal until its surface is flush with the timing gear cover edge.

SST 09214-76011

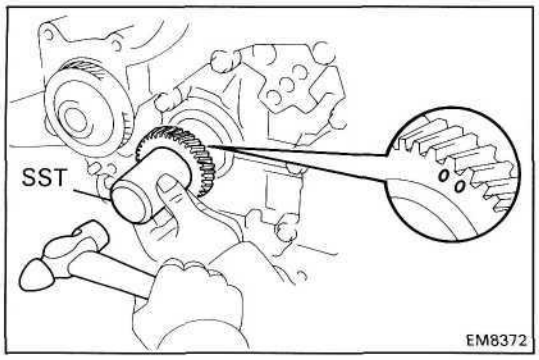

INSTALLATION OF TIMING GEARS

(See page EM-42)

1. INSTALL CRANKSHAFT TIMING GEAR

(a) Put the timing crankshaft timing gear with the timing mark facing frontward.

(b) Align the timing gear set key with the key groove of the timing gear.

(c) Using SST and a hammer, tap in the timing gear.

SST 09223-00010

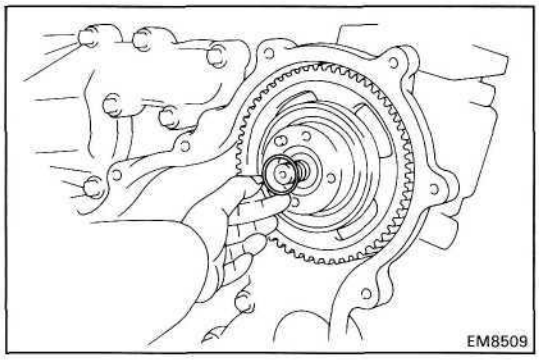

2. INSTALL INJECTION PUMP DRIVE GEAR

(a) Install the set key to the groove of the injection pump drive shaft.

(b) Align the set key with the key groove of the injection pump drive gear and install the drive gear.

(c) Install a new O-ring to the drive gear.

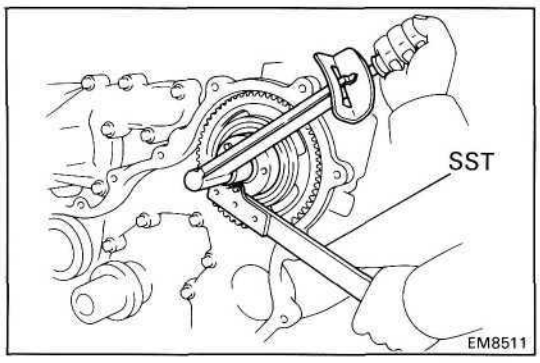

(d) Install the injection pump drive gear set nut.

(e) Using SST, torque the nut.

SST 09330-00021

Torque: 1,000 kg-cm (72 ft-lb, 98 N-m)

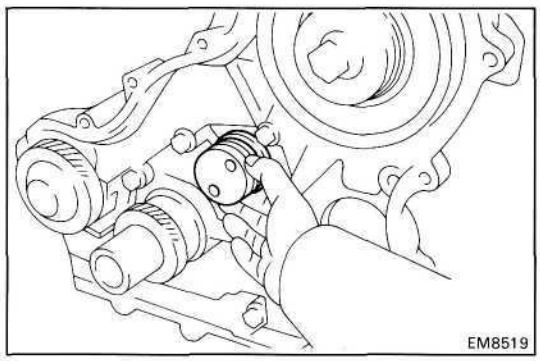

3. INSTALL IDLER GEAR

(a) Install the idler gear shaft.

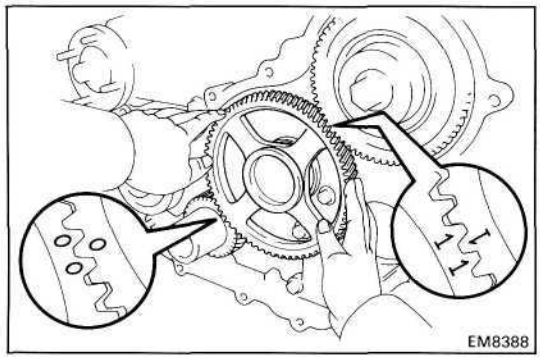

(b) Align the idler gear timing marks "0" and " 1 " with the crankshaft timing gear mark "0" and injection pump drive gear timing mark " 1 " respectively, and mesh the gears.

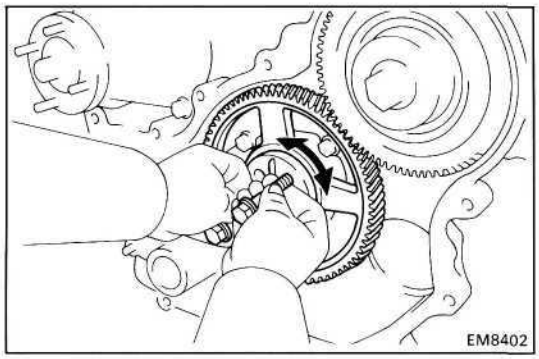

(c) Align the thrust plate set bolt holes.

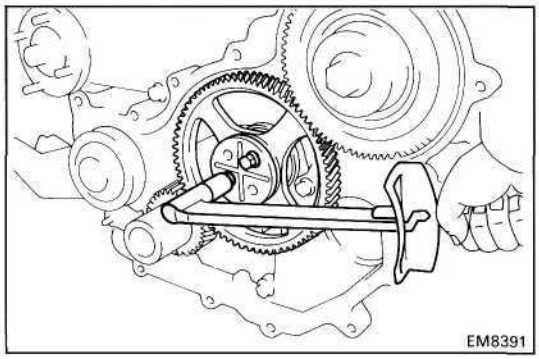

(d) Install the thrust plate with the two bolts. Torque the bolts.

Torque: 400 kg-cm (29 ft-lb, 39 N·m)

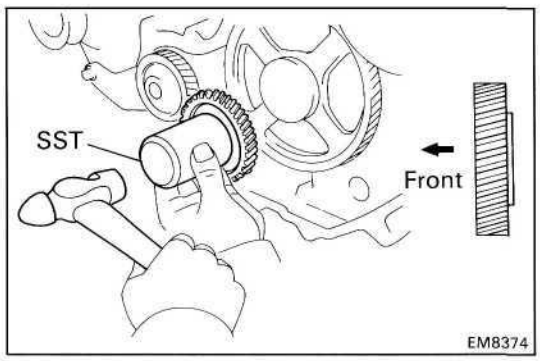

4. INSTALL PUMP DRIVE SHAFT GEAR

(a) Align the pump drive shaft gear set key with the key groove of the drive shaft gear.

(b) Using SST and a hammer, tap in the pump drive shaft gear.

SST 09223-00010

5. INSTALL TIMING GEAR COVER

(a) Remove any old packing (FIPG) material and be careful not to drop any oil on the contact surfaces of the timing gear cover and cylinder block.

- Using a razor blade and gasket scraper, remove all the old packing (FIPG) material from the gasket surfaces and sealing groove.
- Thoroughly clean all components to remove all the loose material.
- Using a non-residue solvent, clean both sealing surfaces.

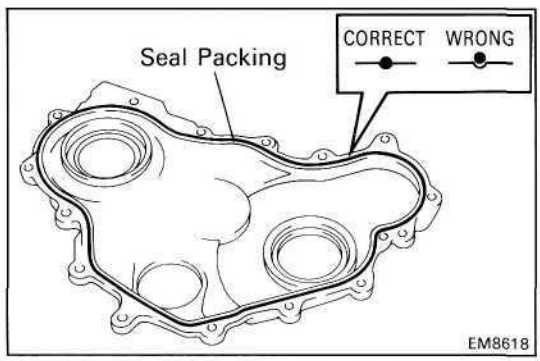

(b) Apply seal packing to the timing gear cover as shown in the illustration.

Seal packing: Part No.08826-00080 or equivalent

- Install a nozzle that has been cut to a 2 - 3 mm (0.08-0.12 in.) opening.
- Parts must be assembled within 5 minutes of application. Otherwise the material must be removed and reapplied.
- Immediately remove nozzle from the tube and reinstall cap.

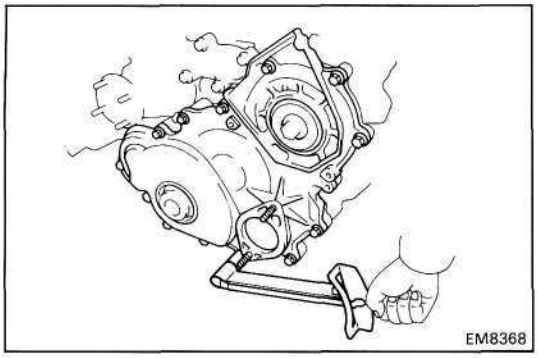

(c) Install the timing gear cover with the fourteen bolts.

Torque: 200 kg-cm (14 ft-lb, 20 N·m)

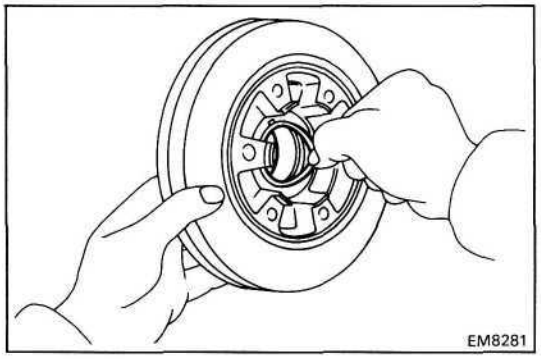

6. INSTALL NO.1 CRANKSHAFT PULLEY

(a) Install a new O-ring in the No.1 crankshaft pulley groove.

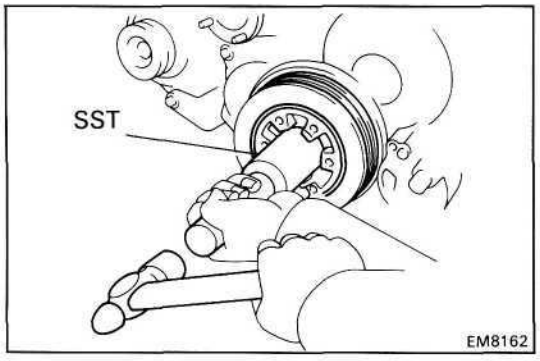

(b) Align the pulley set key with the key groove of the pulley.

(c) Using SST and a hammer, tap in the pulley.

SST 09214-60010

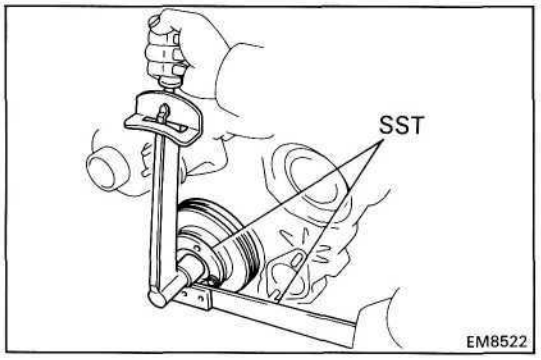

(d) Using SST, install and torque the plate and bolt.

Torque: 5,000 kg-cm (362 ft-lb, 490 N·m)

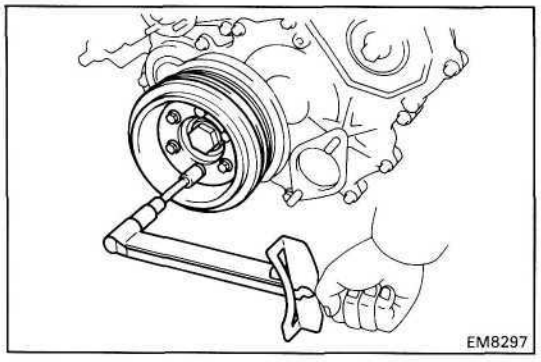

7. (1HZand1HD-T)
INSTALL NO.2 CRANKSHAFT PULLEY

Install the No.2 crankshaft pulley with the six bolts.

Torque: 250 kg-cm (18 ft-lb, 25 N-m)

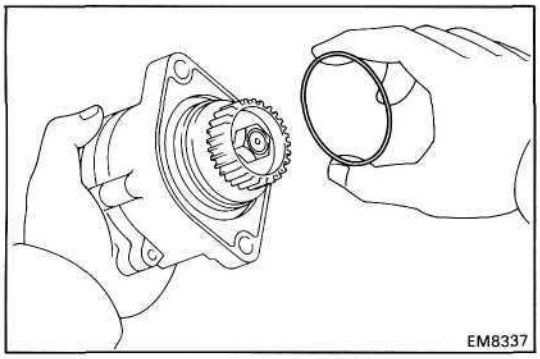

8. INSTALL VACUUM PUMP

(a) Install a new O-ring to the vacuum pump.

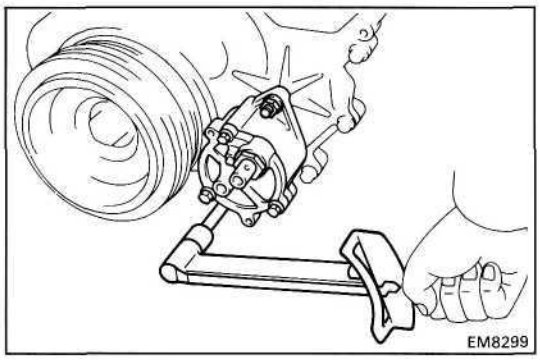

(b) Install the vacuum pump with the two nuts.

Torque: 400 kg-cm (29 ft-lb, 39 N·m)

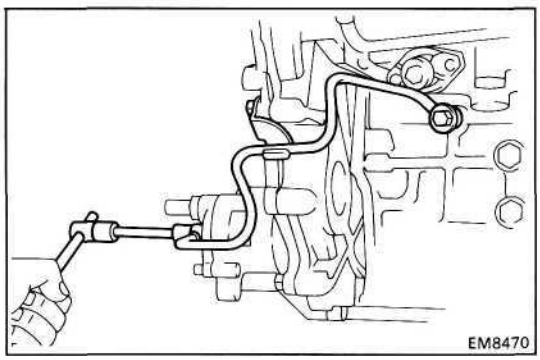

9. INSTALL OIL PIPE

Install the oil pipe with the bolt, two union bolts and four new gaskets.

Torque: Bolt 200 kg-cm (14 ft-lb, 20 N·m)
Union bolt 185 kg-cm (13 ft-lb, 18 N·m)

10. INSTALL CAMSHAFT OIL SEAL RETAINER
(See step 6 on page EM-79)

11. INSTALL PULLEYS AND TIMING BELT
(See page EM-38)

12. INSTALL WATER PUMP PULLEY, FAN AND DRIVE BELT
(See step 5 on page CO-9)

CYLINDER HEAD

COMPONENTS

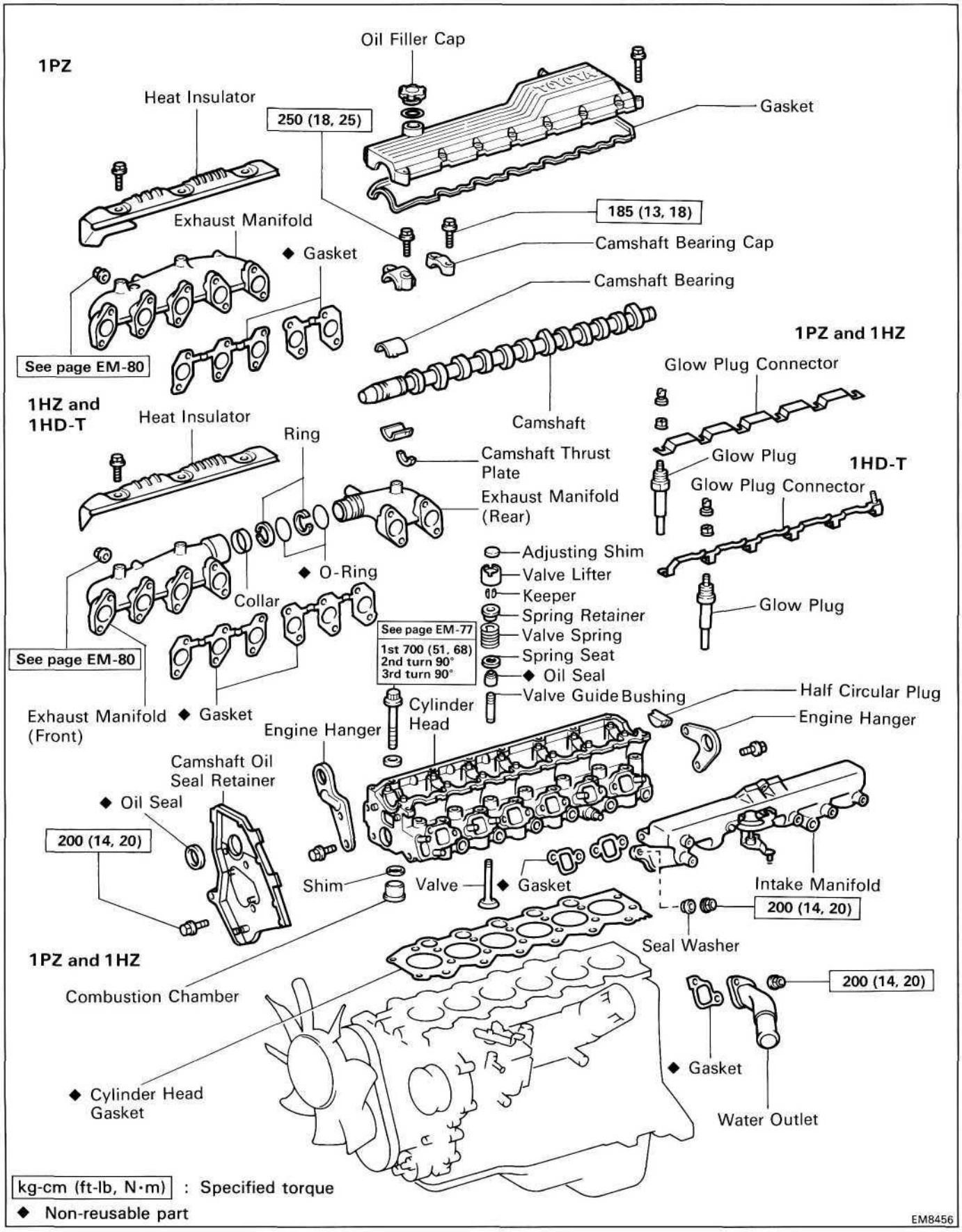

REMOVAL OF CYLINDER HEAD

(See page EM-54)

1. DRAIN ENGINE COOLANT (See page CO-4)
2. REMOVE INTAKE PIPE (See step 6 on page EM-34)
3. REMOVE INJECTION PIPES (See step 2 on page FU-9)

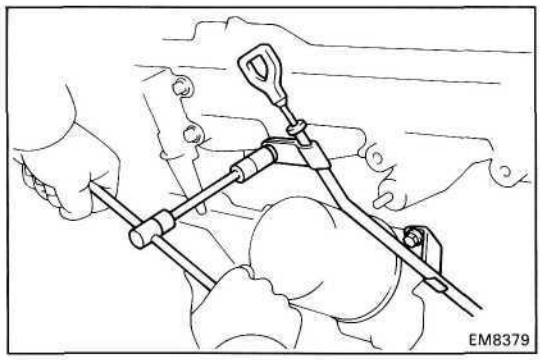

4. REMOVE OIL DIPSTICK AND OIL DIPSTICK GUIDE
   (a) Remove the two bolts, and the oil dipstick guide assembly.
   (b) Remove the O-ring from the oil dipstick guide.

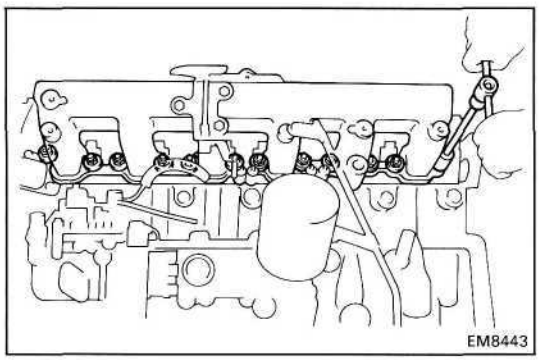

5. REMOVE INTAKE MANIFOLD
   (a) Disconnect the fuel hose from the nozzle leakage pipe.
   (b) (1PZ)
   Remove the ten bolts, seal washers, intake manifold and five gaskets.
   (c) (1 HZ and 1HD-T)
   Remove the twelve bolts, seal washers, intake manifold and six gaskets.

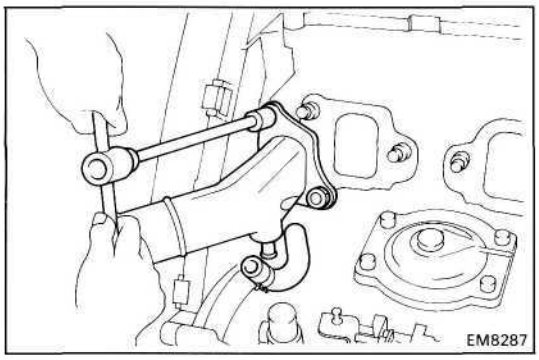

6. REMOVE WATER OUTLET
   (a) (1HD-T)
   Disconnect the water by-pass hose.
   (b) Remove the two nuts, water outlet and gasket.

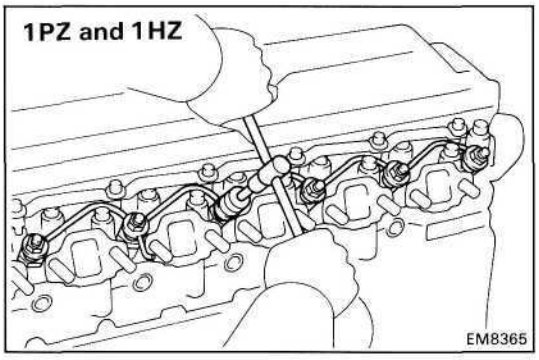

7. REMOVE NOZZLE LEAKAGE PIPE (1PZand1HZ)
   (a) (1PZ)
   Remove the five union nuts, nozzle leakage pipe and five gaskets.
   (b) (1HZ)
   Remove the six union nuts, nozzle leakage pipe and six gaskets.

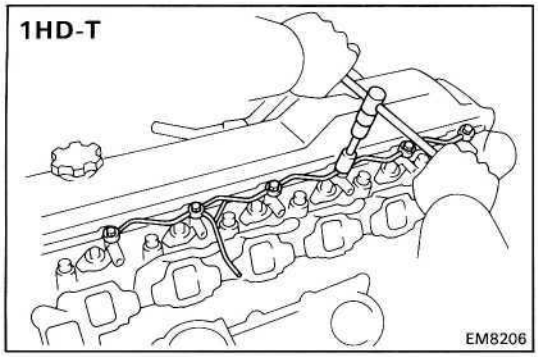

(1HD-T)

Remove the six hollow bolts, nozzle leakage pipe and twelve gaskets.

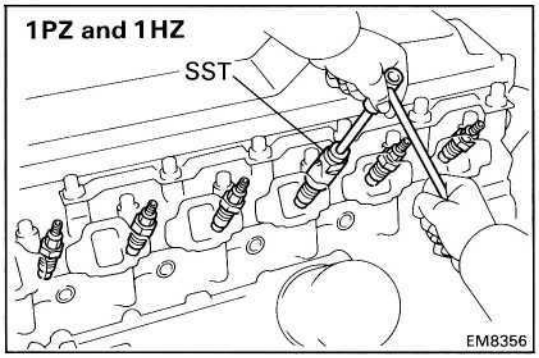

8. REMOVE INJECTION NOZZLES

(1PZ and 1HZ)

(a) (1PZ)
Using SST, remove the five injection nozzles, seats and gaskets.

SST 09268-64010

(b) (1HZ)
Using SST, remove the six injection nozzles, seats and gaskets.

SST 09268-64010

HINT: Arrange the injection nozzles in correct order.

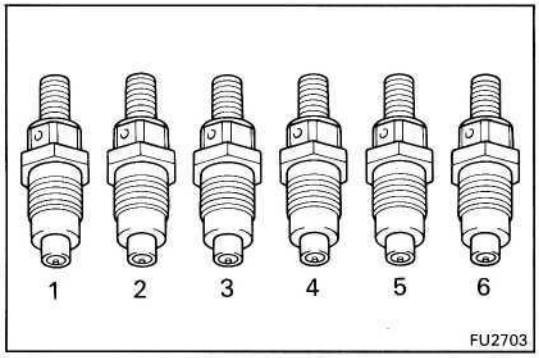

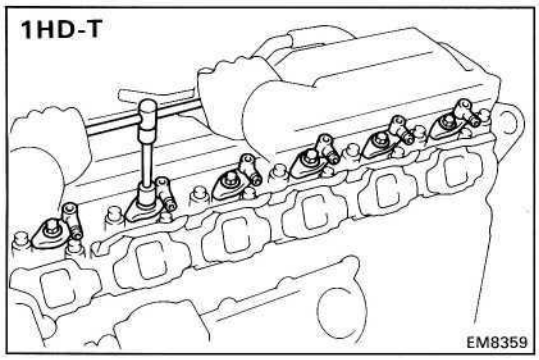

(1HD-T)

(a) Remove the bolt, washer, nozzle holder, injection nozzle and seat.

(b) Remove the O-ring from the injection nozzle.

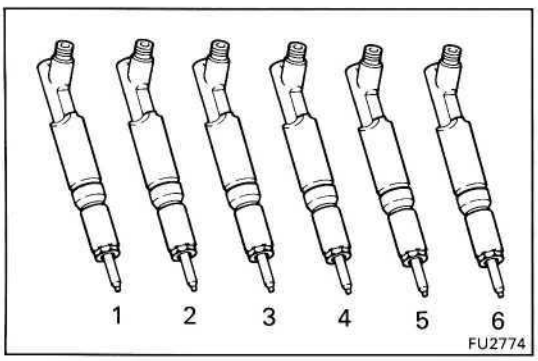

HINT: Arrange the injection nozzles in correct order.

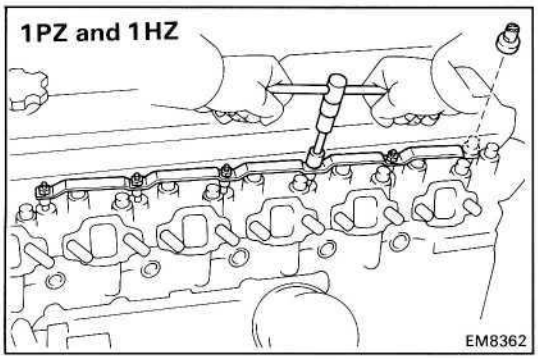

9. REMOVE GLOW PLUGS

(a) Remove the five screw grommets (1 PZ) or six screw grommets (1 HZ and 1 HD-T).

(b) Remove the five nuts (1PZ) or six nuts (1 HZ and 1HD-T) and glow plug connector.

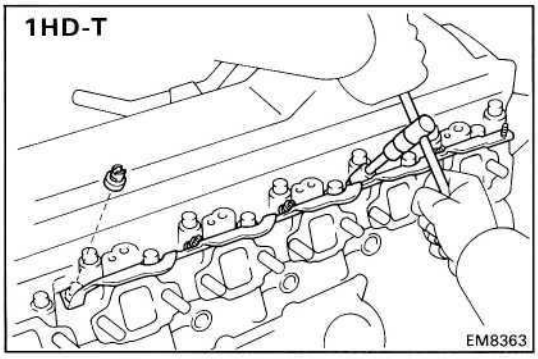

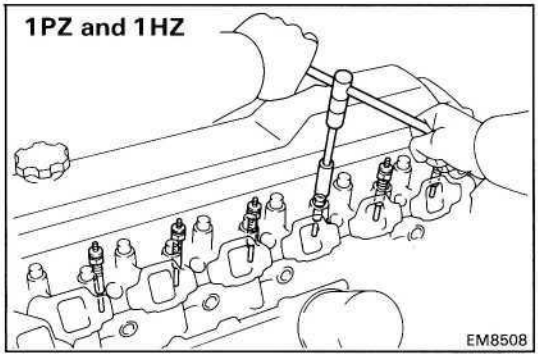

(c) Using a 12 mm deep socket wrench, remove the five glow plugs (1 PZ) or six glow plugs (1 HZ and 1 HD-T).

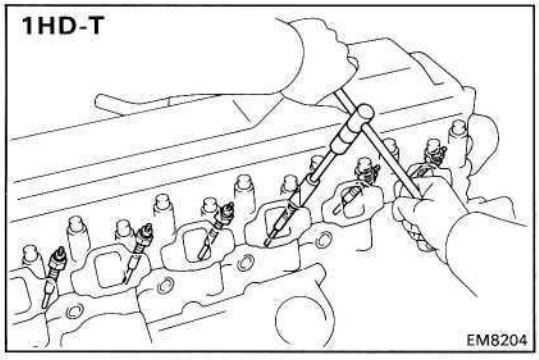

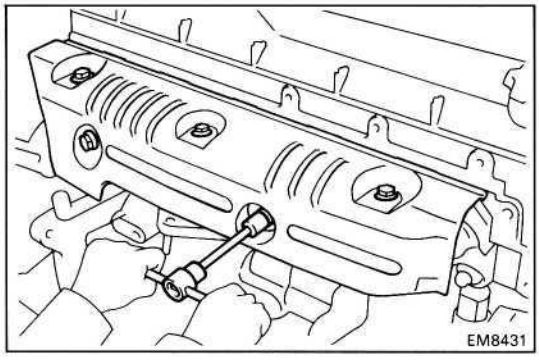

10. (IPZancMHZ)
REMOVE EXHAUST MANIFOLD

(a) Remove the four bolts (1 PZ) or five bolts (1 HZ) and heat insulator.

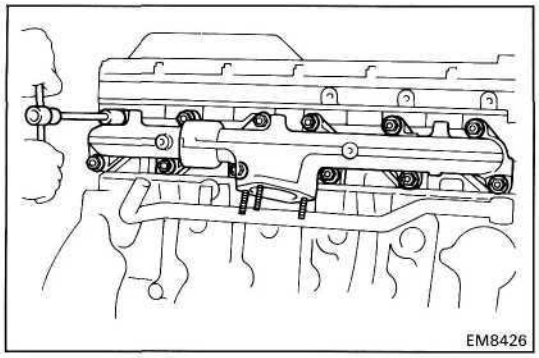

(b) Remove the ten nuts (1 PZ) or twelve nuts (1HZ), exhaust manifold and two gaskets.

11. (1HD-T)
REMOVE TURBOCHARGER AND EXHAUST MANIFOLD ASSEMBLY
(See steps 3 to 8 on pages TC-9, 10)

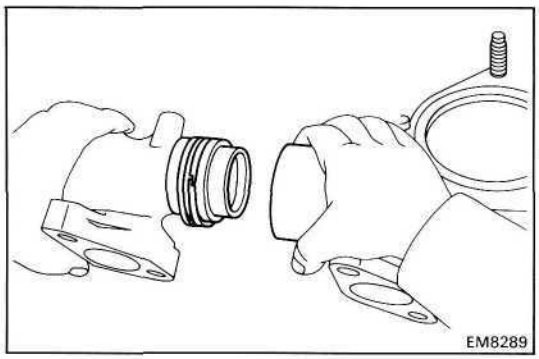

12. (1HZ and 1HD-T)
SEPARATE EXHAUST MANIFOLDS

(a) Separate the front and rear exhaust manifolds.

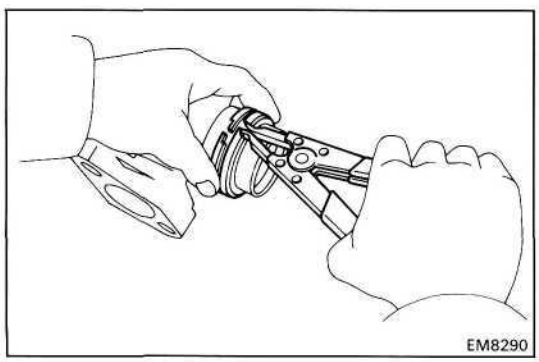

(b) Using snap ring pliers, remove the two manifold rings.

13. REMOVE TIMING BELT AND PULLEYS
(See steps 1 to 3 and 5 to 7 on pages EM-33 to 35)

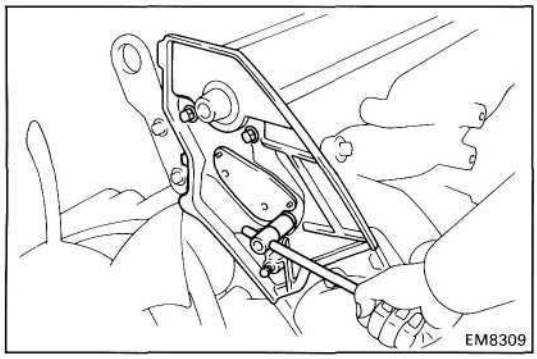

14. REMOVE CAMSHAFT OIL SEAL RETAINER

(a) Remove the four bolts holding the camshaft oil seal retainer to the cylinder head.

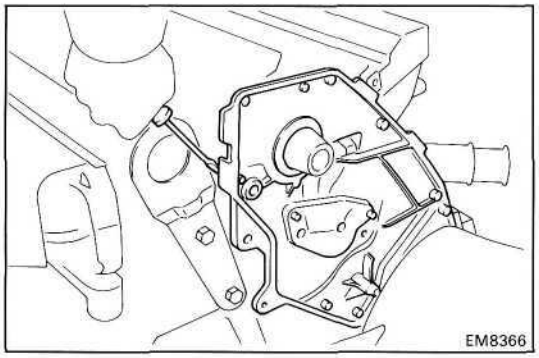

(b) Pry out the camshaft oil seal retainer.

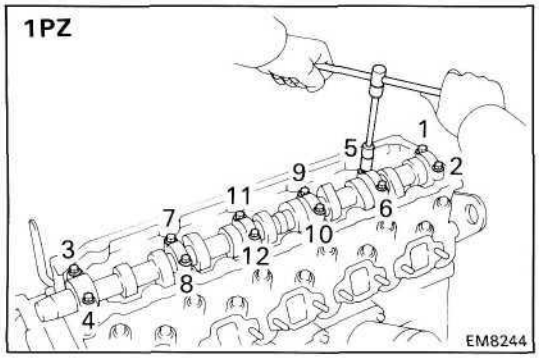

15. REMOVE CAMSHAFT

(a) (1PZ)
Uniformly loosen and remove the twelve bearing cap bolts in several passes in the sequence shown.

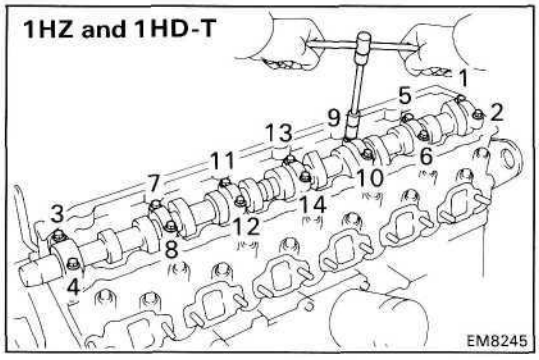

(b) (1 HZ and 1HD-T)
Uniformly loosen and remove the fourteen bearing cap bolts in several passes in the sequence shown.

(c) Remove the six bearing caps (1 PZ) or seven bearing caps (1 HZ and 1 HD-T) and camshaft.

(d) Remove the two bearings from the No.1 bearing cap and No.1 journal of the cylinder head.

(e) Remove the camshaft thrust plate.

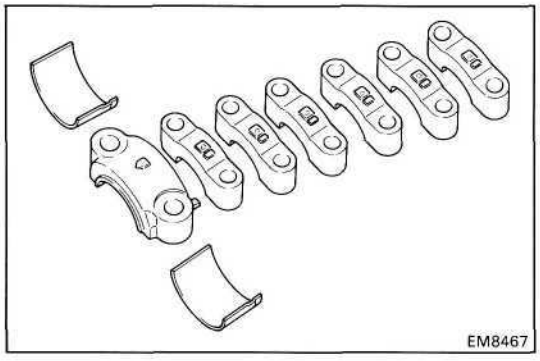

HINT: Arrange the bearing caps and bearings in correct order.

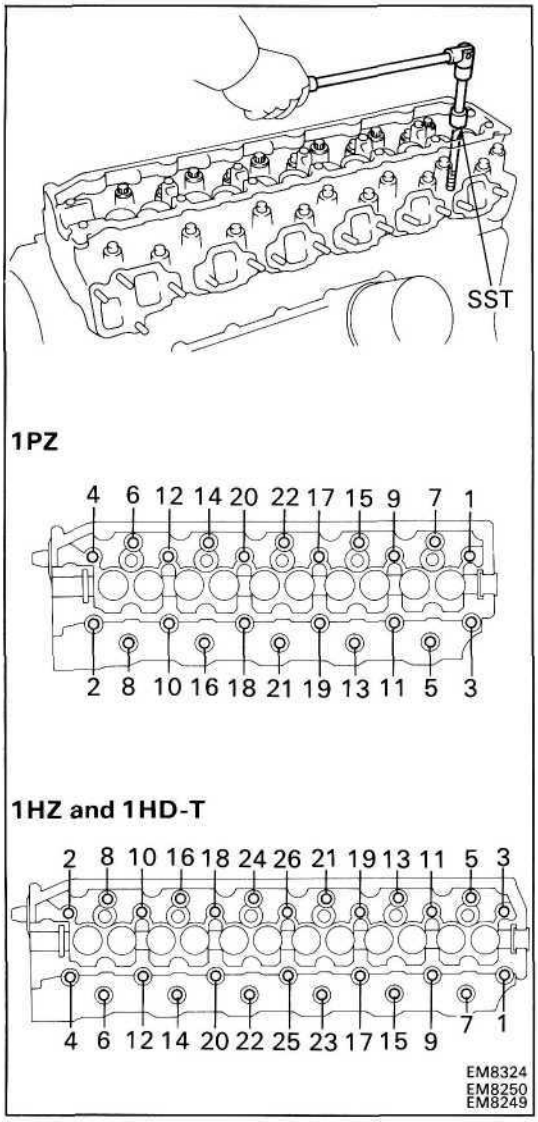

16. REMOVE CYLINDER HEAD

(a) Using SST, uniformly loosen and remove the twenty-two cylinder head bolts (1 PZ) or twenty-six cylinder head bolts (1 HZ and 1 HD-T) in several passes in the sequence shown.

SST 09011-381 21

NOTICE: Head warpage or cracking could result from removing bolts in incorrect order.

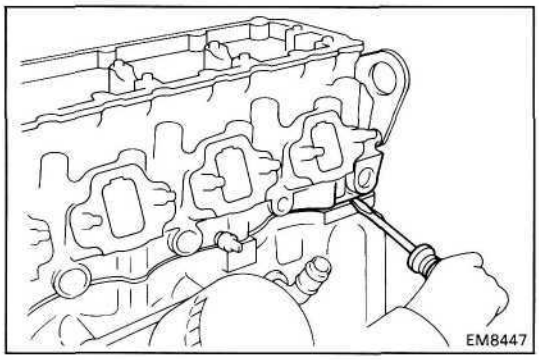

(b) Lift the cylinder head from the dowels on the cylinder block and place the head on wooden blocks on a bench.

HINT: If the cylinder head is difficult to lift off, pry with a screwdriver between the cylinder head and block.

NOTICE: Be careful not to damage the cylinder head and cylinder block surfaces of cylinder head gasket side.

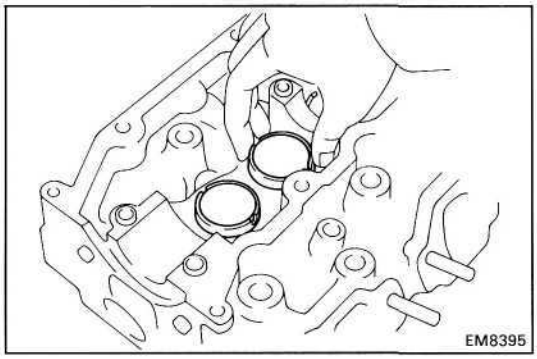

DISASSEMBLY OF CYLINDER HEAD

(See page EM-54)

1. REMOVE VALVE LIFTERS AND SHIMS

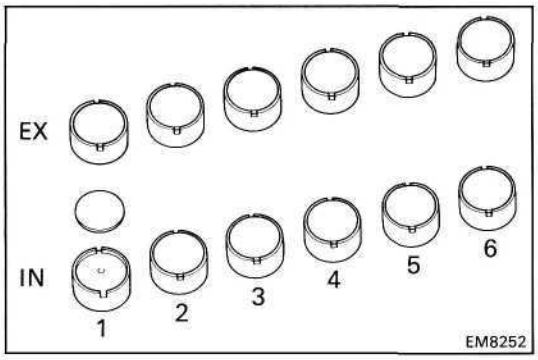

HINT: Arrange the valve lifters and shims in correct order.

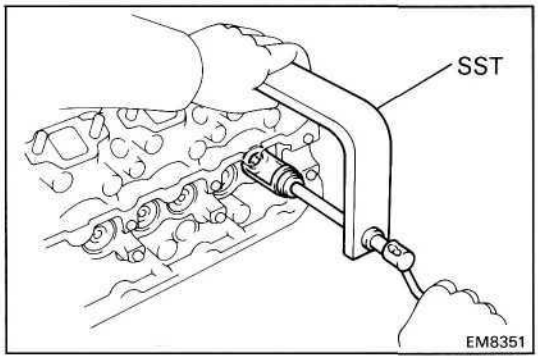

2. REMOVE VALVES

(a) Using SST, compress the valve spring and remove the two keepers.

SST 09202-43013

(b) Remove the spring retainer, valve spring, valve and spring seat.

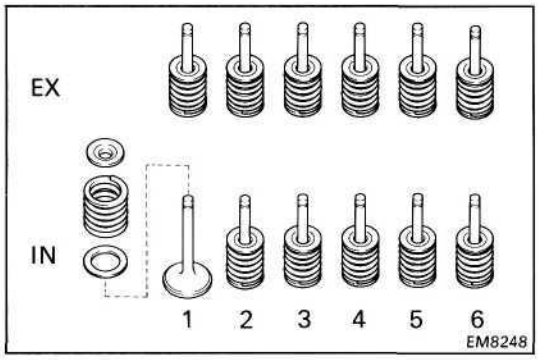

HINT: Arrange the valves, valve springs, spring seats and spring retainers in correct order.

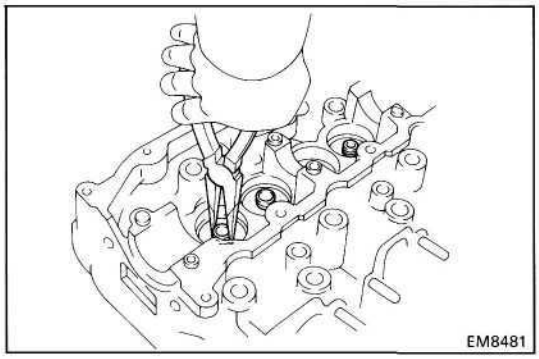

(c) Using needle-nose pliers, remove the oil seal.

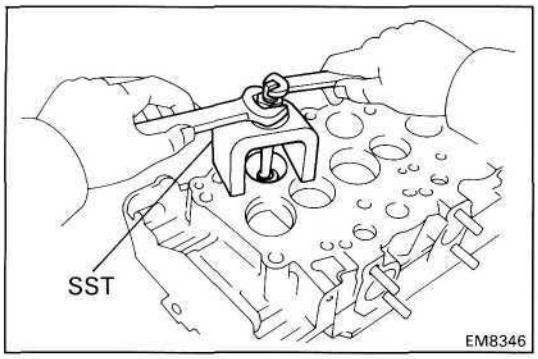

3. (IPZ and 1HZ)
REMOVE COMBUSTION CHAMBERS

Using SST, remove the five (1 PZ) and six (1 HZ) combustion chambers (and shims).

SST 09208-48010

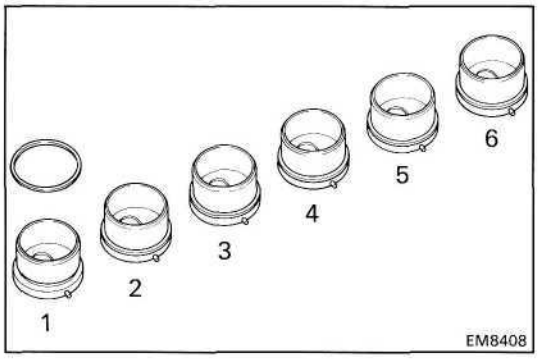

HINT: Arrange the combustion chambers (and shims) in correct order.

4. REMOVE HALF CIRCULAR PLUG

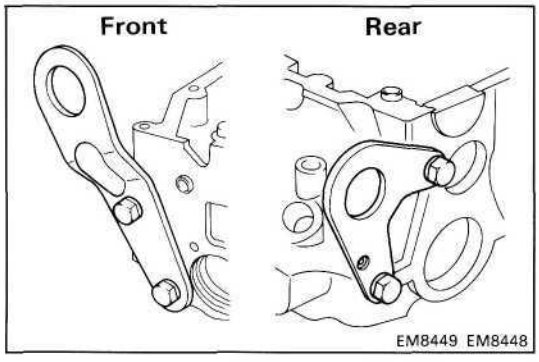

5. REMOVE FRONT AND REAR ENGINE HANGERS

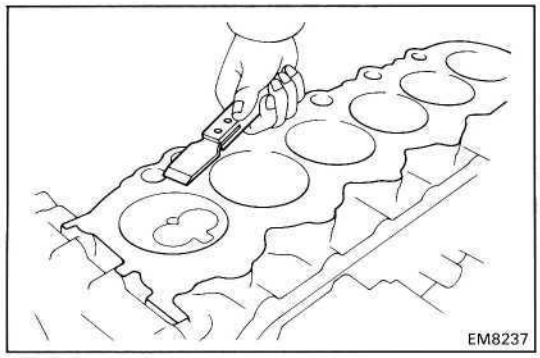

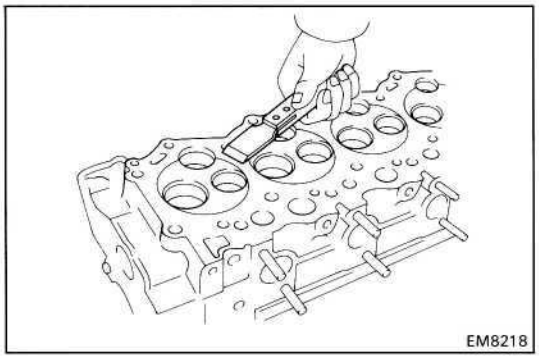

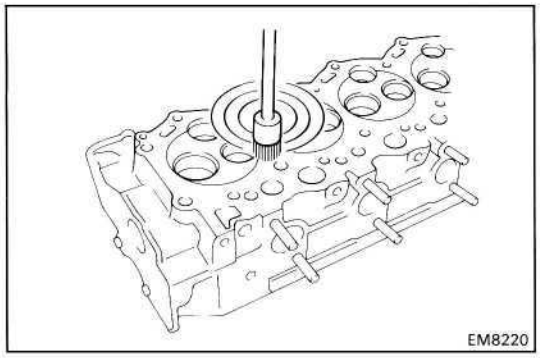

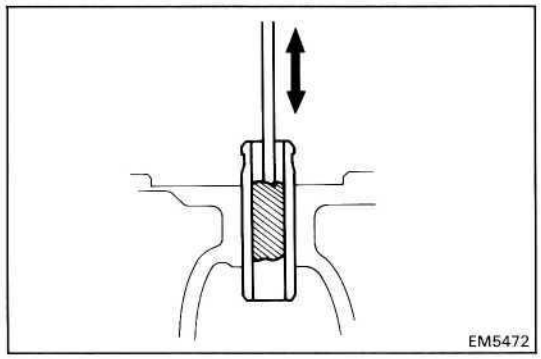

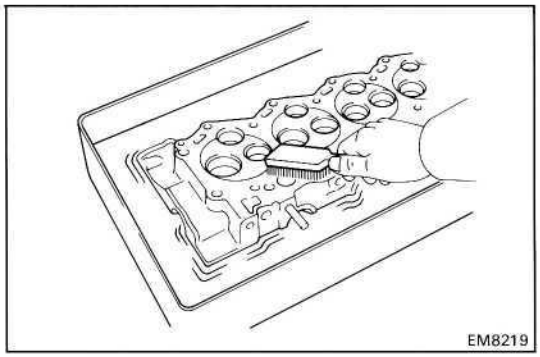

INSPECTION, CLEANING AND REPAIR OF CYLINDER HEAD COMPONENTS

1. CLEAN TOP OF PISTONS AND TOP OF BLOCK

(a) Turn the crankshaft and bring each piston to top dead center (TDC). Using a gasket scraper, remove all the carbon from the piston top.

(b) Remove all the gasket material from the top of the cylinder block.

NOTICE: Be careful not to scratch the surfaces.

(c) Using compressed air, blow carbon and oil from the bolt holes.

CAUTION: Protect your eyes when using high pressure air.

2. REMOVE GASKET MATERIAL

Using a gasket scraper, remove all the gasket material from the manifold and cylinder head surface.

NOTICE: Be careful not to scratch the surfaces.

3. CLEAN COMBUSTION CHAMBERS

Using a wire brush, remove all the carbon from the combustion chambers.

NOTICE: Be careful not to scratch the head gasket contact surface.

4. CLEAN VALVE GUIDE BUSHINGS

Using a valve guide bushing brush and solvent, clean all the guide bushings.

5. CLEAN CYLINDER HEAD

Using a soft brush and solvent, thoroughly clean cylinder heads.

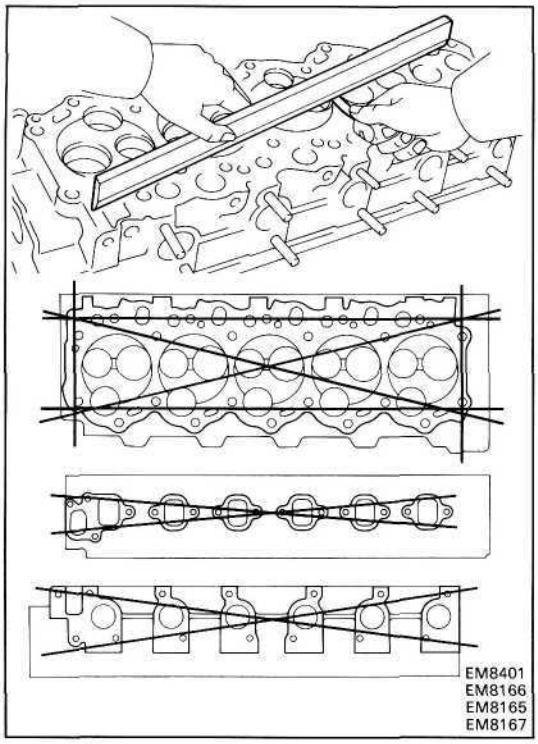

6. INSPECT CYLINDER HEAD FOR FLATNESS

Using a precision straight edge and thickness gauge, measure the surfaces contacting the cylinder block manifolds for warpage.

Maximum warpage: 0.20 mm (0.0079 in.)

If warpage is greater than maximum, replace the cylinder head.

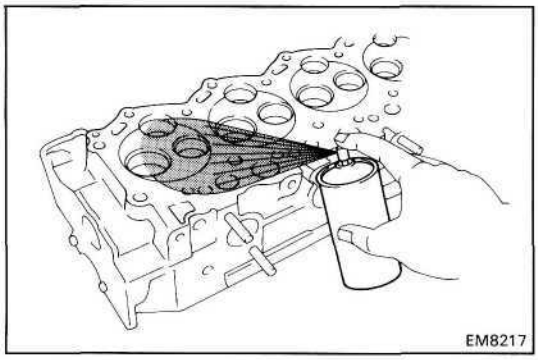

7. INSPECT CYLINDER HEAD FOR CRACKS

Using a dye penetrant, check the combustion chamber, intake and exhaust ports, head surface and the top of the head for cracks.

If cracked, replace the cylinder head.

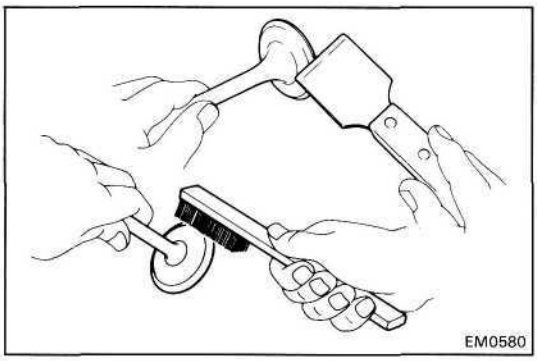

8. CLEAN VALVES

(a) Using a gasket scraper, chip any carbon from the valve head.

(b) Using a wire brush, thoroughly clean the valve.

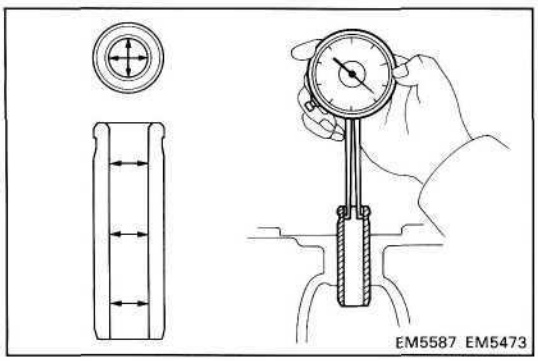

9. INSPECT VALVE STEMS AND GUIDE BUSHINGS

(a) Using a caliper gauge, measure the inside diameter of the guide bushing.

Bushing inside diameter:
8.010-8.030 mm (0.3154-0.3161 in.)

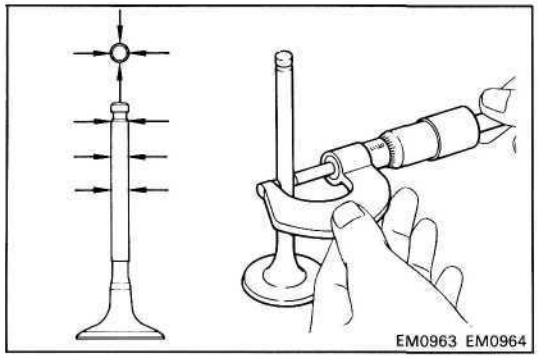

(b) Using a micrometer, measure the diameter of the valve stem.

Valve stem diameter:

Intake	**7.975-7.990 mm (0.3140-0.3146 in.)**
Exhaust	**7.960-7.975 mm (0.3134-0.3140 in.)**

(c) Subtract the valve stem diameter measurement from the guide bushing inside diameter measurement.

Standard oil clearance:

Intake	**0.020-0.055 mm (0.0008-0.0022 in.)**
Exhaust	**0.035-0.070 mm (0.0014-0.0028 in.)**

Maximum oil clearance:

Intake	**0.08 mm (0.0031 in.)**
Exhaust	**0.10 mm** (0.0039 **in.)**

If the clearance is greater than maximum, replace the valve and guide bushing.

10. IF NECESSARY, REPLACE VALVE GUIDE BUSHINGS

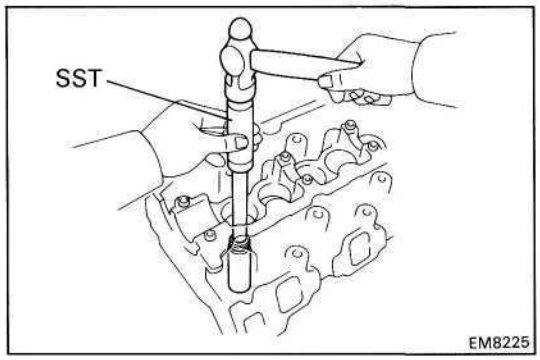

(a) Using SST and a hammer, tap out the guide bushing.

SST 09201-60011

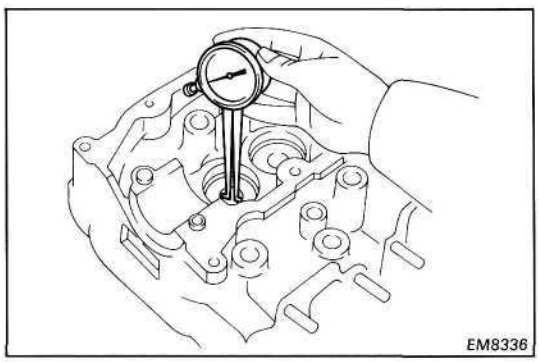

(b) Using a caliper gauge, measure the bushing bore diameter of the cylinder head.

Bushing bore diameter mm (in.)	Bushing size
13.004 – 13.025 (0.5112 – 0.5128)	Use STD
13.054 – 13.075 (0.5139 – 0.5148)	Use O/S 0.05

(c) Select a new guide bushing (STD size or 0/S 0.05).

If the bushing bore diameter of the cylinder head is greater than 13.025 mm (0.5128 in.), machine the bushing bore to the following dimension:

Rebored cylinder head bushing bore dimension:
13.054-13.075 mm (0.5139-0.5148 in.)

If the bushing bore diameter of the cylinder head is greater than 13.075 mm (0.5148 in.), replace the cylinder head.

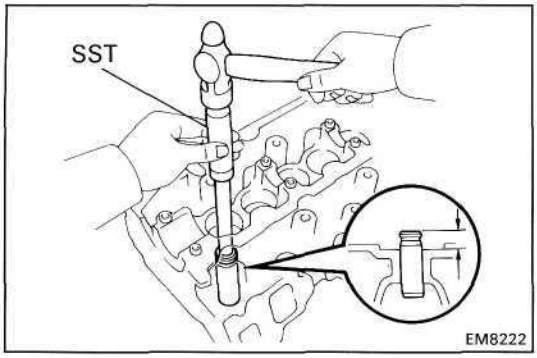

(d) Using SST and a hammer, tap in a new guide bushing to where there is 11.8 - 12.2 mm (0.465 - 0.480 in.) protruding from the cylinder head.

SST 09201-60011

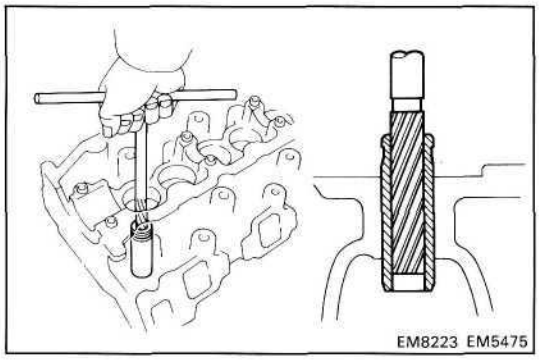

(e) Using a sharp 8 mm reamer, ream the guide bushing to obtain the standard specified clearance (See page EM-65) between the guide bushing and valve stem.

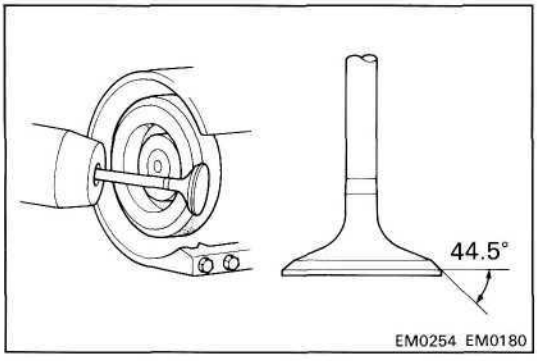

11. INSPECT AND GRIND VALVES

(a) Grind the valve enough to remove pits and carbon.

(b) Check that the valve is ground to the correct valve face angle.

Valve face angle: 44.5°

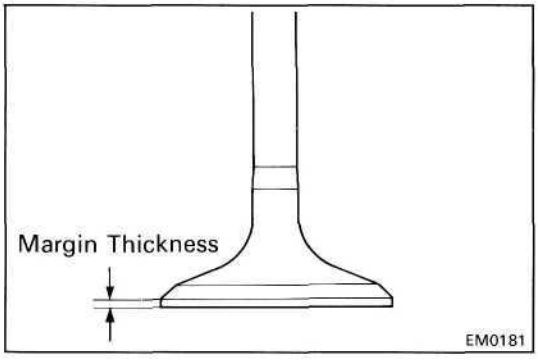

(c) Check the valve head margin thickness.

Standard margin thickness:
Intake 1.6 mm (0.063 in.)
Exhaust 1.7 mm (0.067 in.)

Minimum margin thickness:
Intake 1.1 mm (0.043 in.)
Exhaust 1.2 mm (0.047 in.)

If the margin thickness is less than minimum, replace the valve.

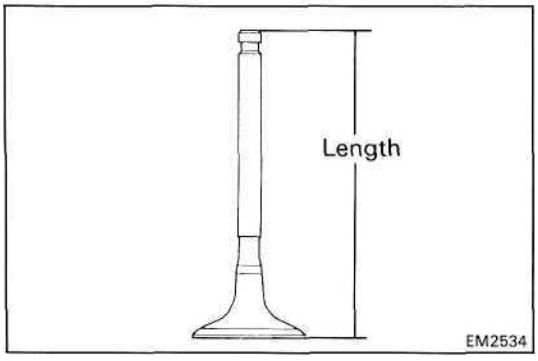

(d) Check the valve overall length.

Standard overall length:
Intake 103.29-103.69 mm (4.0665-4.0823 in.)
Exhaust 103.14-103.54 mm (4.0606-4.0764 in.)

Minimum overall length:
Intake 102.79 mm (4.0468 in.)
Exhaust 102.64 mm (4.0409 in.)

If the overall length is less than minimum, replace the valve.

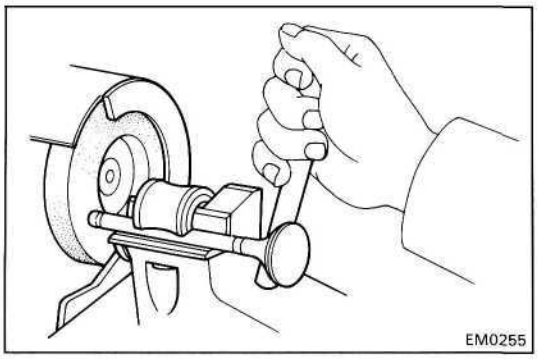

(e) Check the surface of the valve stem tip for wear.

If the valve stem tip is worn, resurface the tip with a grinder or replace the valve.

NOTICE: Do not grind off more than the minimum overall length.

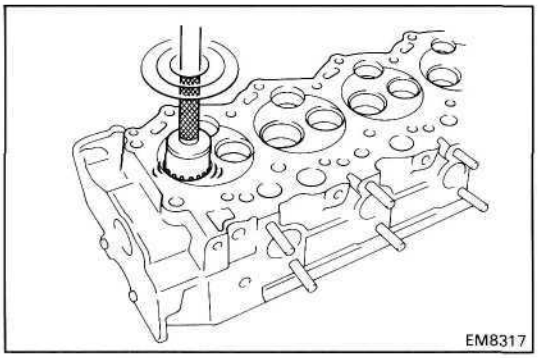

12. INSPECT AND CLEAN VALVE SEATS

(a) Using a 45° carbide cutter, resurface the valve seats. Remove only enough metal to clean the seats.

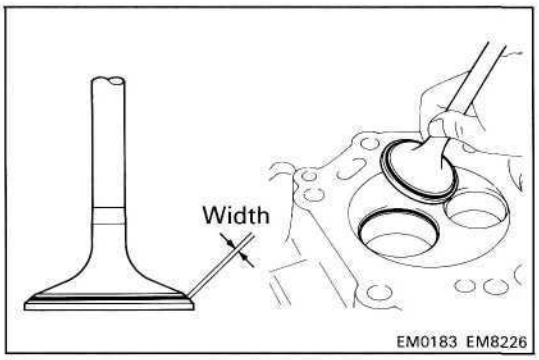

(b) Check the valve seating position. Apply a thin coat of Prussian blue (or white lead) to the valve face. Lightly press the valve against the seat. Do not rotate the valve.

(c) Check the valve face and seat for the following:

- If blue appears 360° around the face, the valve is concentric. If not, replace the valve.
- If blue appears 360° around the valve seat, the guide and face are concentric. If not, resurface the seat.
- Check that the seat contact is on the middle of the valve face with the following width:

Intake 1.5-1.9 mm (0.059-0.075 in.)
Exhaust 1.8-2.2 mm (0.071 -0.087 in.)

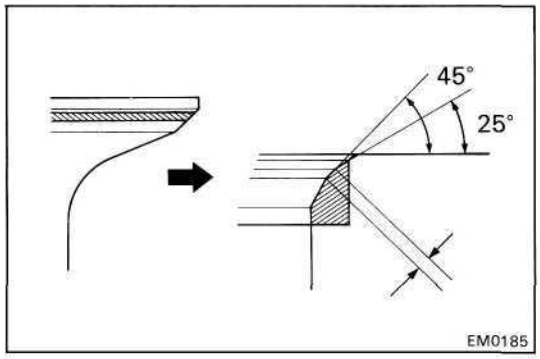

If not, correct the valve seats as follows:

(1) If the seating is too high on the valve face, use 25° and 45° cutters to correct the seat.

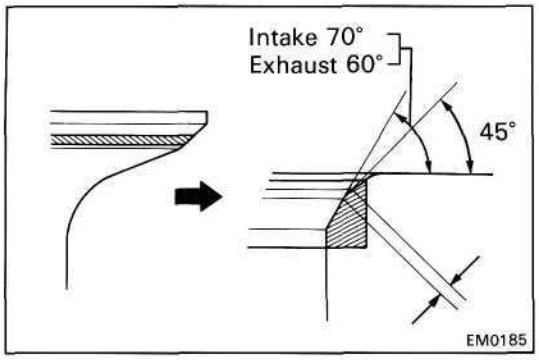

(2) (Intake)
If the seating is too low on the valve face, use 70° and 45° cutters to correct the seat.

(Exhaust)
If the seating is too low on the valve face, use 60° and 45° cutters to correct the seat.

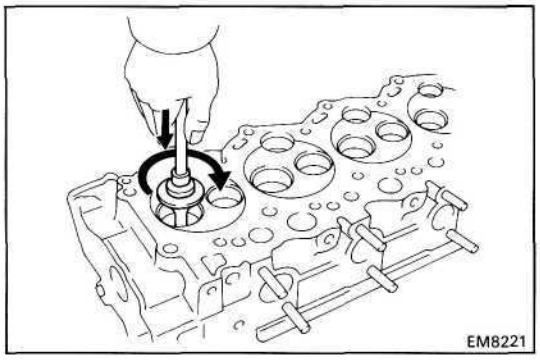

(d) Hand-lap the valve and valve seat with an abrasive compound.

(e) After hand-lapping, clean the valve and valve seat.

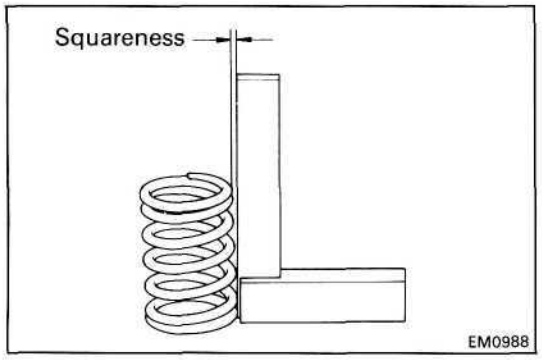

13. INSPECT VALVE SPRINGS

(a) Using a steel square, measure the squareness of the valve spring.

Maximum squareness: 2.0 mm (0.075 in.)

If squareness is greater than maximum, replace the valve spring.

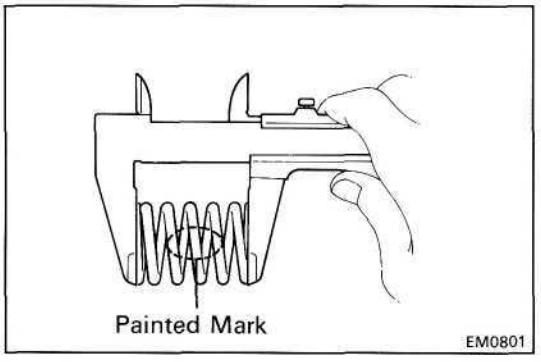

(b) Using vernier calipers, measure the free length of the valve spring.

Free length:

Yellow painted mark	**46.20 mm (1.8189 in.)**
Blue painted mark	**49.14 mm (1.9346 in.)**

If the free length is not as specified, replace the valve spring.

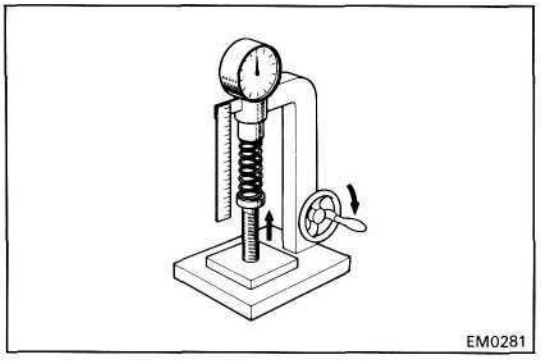

(c) Using a spring tester, measure the tension of the valve spring at the specified installed length.

Installed tension:
30.7-33.9 kg (67.7-74.7 lb, 301 -332 N)
at 37.0 mm (1.457 in.)

If the installed tension is not as specified, replace the valve spring.

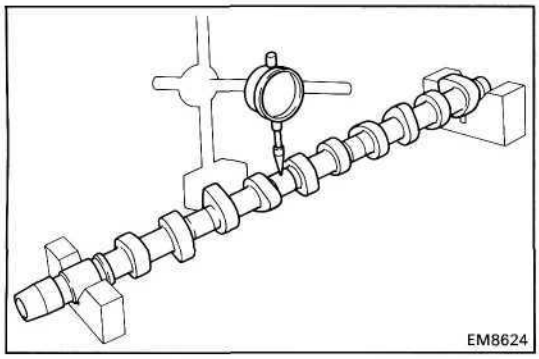

14. INSPECT CAMSHAFTS AND BEARINGS

A. Inspect camshaft for runout

(a) Place the camshaft on V-blocks.

(b) Using a dial indicator, measure the circle runout at the center journal.

Maximum circle runout: 0.10 mm (0.0039 in.)

If the circle runout is greater than maximum, replace the camshaft.

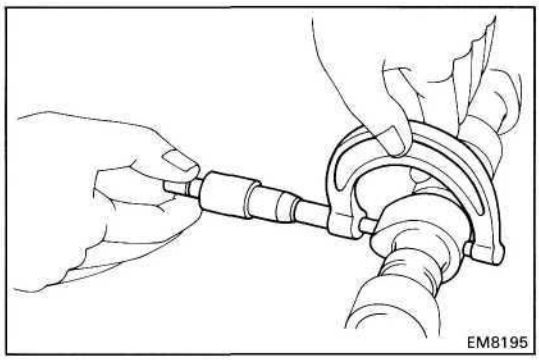

B. Inspect cam lobes

Using a micrometer, measure the cam lobe height.

Standard cam lobe height:

Intake		
	1PZ and 1HZ	**55.090-55.110 mm (2.1689-2.1697 in.)**
	1HD-T	**54.440-54.460 mm (2.1433-2.1441 in.)**
Exhaust		**55.940 - 55.960 mm (2.2024-2.2031 in.)**

Minimum cam lobe height:

Intake		
	IPZ and 1HZ	**54.59 mm (2.1492 in.)**
	1H-D	**53.94 mm (2.1236 in.)**
Exhaust		**55.44 mm (2.1827 in.)**

If the cam lobe height is less than minimum, replace the camshaft.

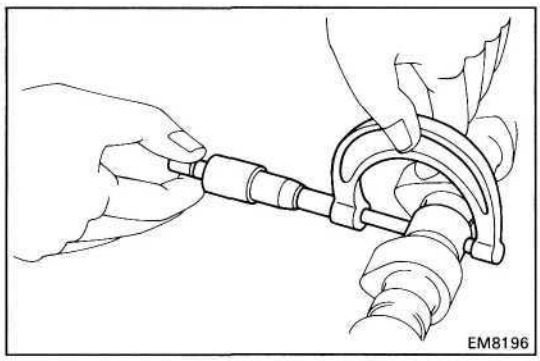

C. Inspect camshaft journals

Using a micrometer, measure the journal diameter.

Journal diameter:

No.1 journal	**34.969-34.985 mm (1.3767-1.3774 in.)**
Others	**27.986-27.988 mm (1.1018-1.1023 in.)**

If the journal diameter is not as specified, check the oil clearance.

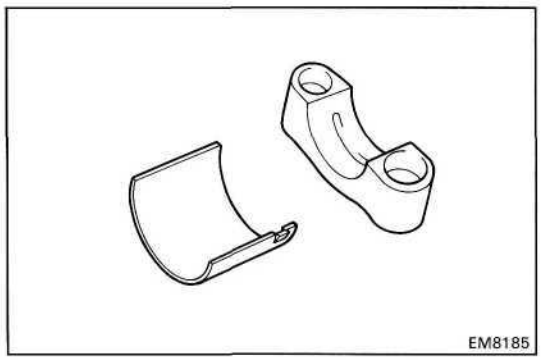

D. Inspect camshaft bearings

Check the bearings for flaking and scoring.

If the bearings are damaged, replace the bearings.

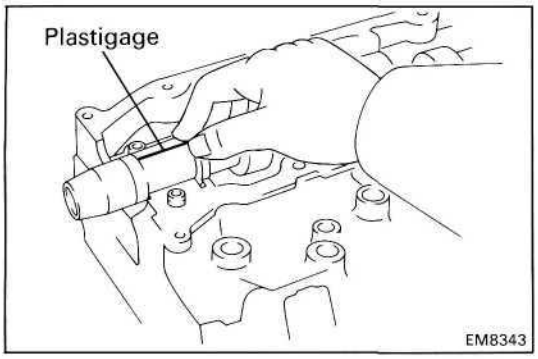

E. Inspect camshaft journal oil clearance

(a) Install the camshaft bearings to the No.1 bearing cap and No.1 journal of the cylinder head.
(See step 4 (b) on page EM-78)

(b) Clean the bearings and camshaft journals.

(c) Place the camshaft on the cylinder head.

(d) Lay a strip of Plastigage across each of the camshaft journals.

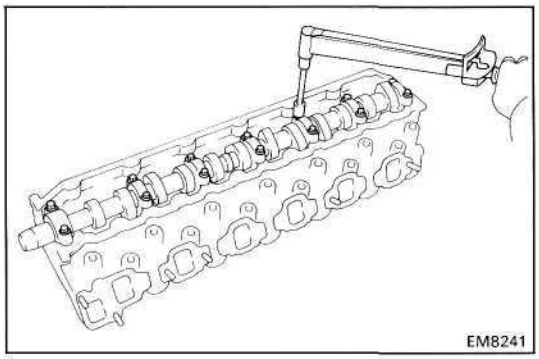

(e) Install the bearing caps.
(See step 4 (c) to (e) on page EM-78)

Torque: 250 kg-cm (18 ft-lb, 25 N·m)

HINT: Do not turn the camshaft.

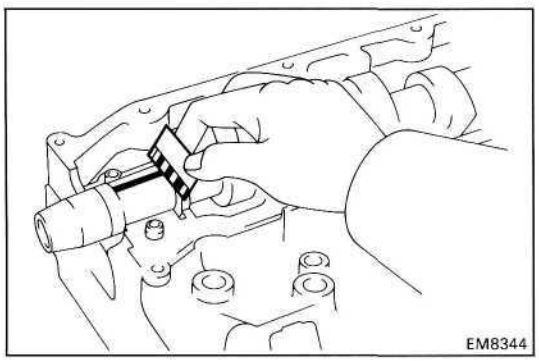

(f) Remove the bearing caps.

(g) Measure the Plastigage at its widest point.

Standard oil clearance:

No.1 journal	**0.022-0.074 mm (0.0009-0.0029 in.)**
Others	**0.030-0.066 mm (0.0012-0.0026 in.)**

Maximum oil clearance: 0.10 mm (0.0039 in.)

If the oil clearance is greater than maximum, replace the bearings or camshaft. If necessary, replace the bearing caps and cylinder head.

(h) Completely remove the Plastigage.

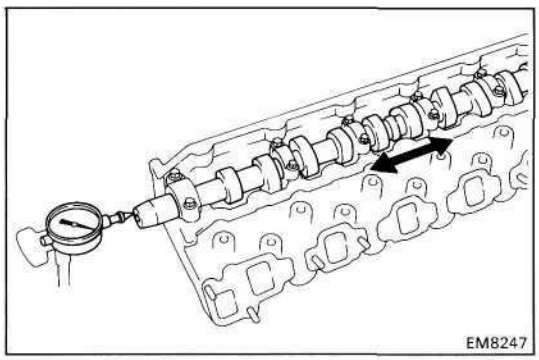

F. Inspect camshaft thrust clearance

(a) Install the camshaft.
(See step 4 on page EM-78)

(b) Using a dial indicator, measure the thrust clearance while moving the camshaft back and forth.

Standard thrust clearance: 0.10-0.20 mm (0.0039-0.0079 in.)

Maximum thrust clearance: 0.30 mm (0.0118 in.)

If the thrust clearance is greater than maximum, replace the thrust plate. If necessary, replace the camshaft.

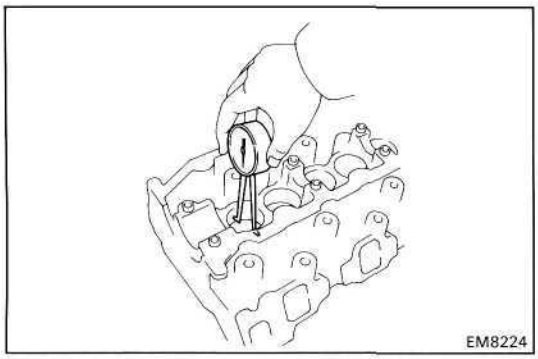

15. INSPECT VALVE LIFTERS AND LIFTER BORES

(a) Using a caliper gauge, measure the lifter bore diameter of the cylinder head.

Lifter bore diameter: 40.960—40.980 mm (1.6126-1.6134 in.)

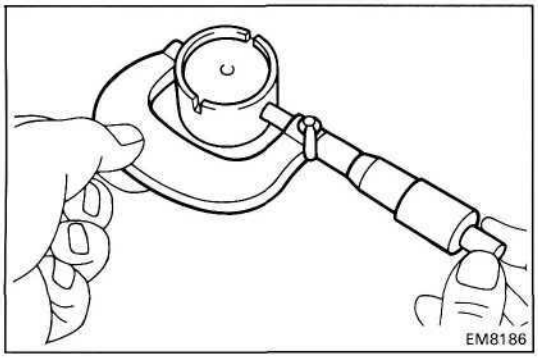

(b) Using a micrometer, measure the lifter diameter.

Lifter diameter: 40.892-40.902 mm (1.6099-1.6103 in.)

(c) Subtract the lifter diameter measurement from the lifter bore diameter measurement.

Standard oil clearance: 0.058-0.083 mm (0.0023-0.0033 in.)

Maximum oil clearance: 0.10 mm (0.0039 in.)

If the oil clearance is greater than maximum, replace the lifter. If necessary, replace the cylinder head.

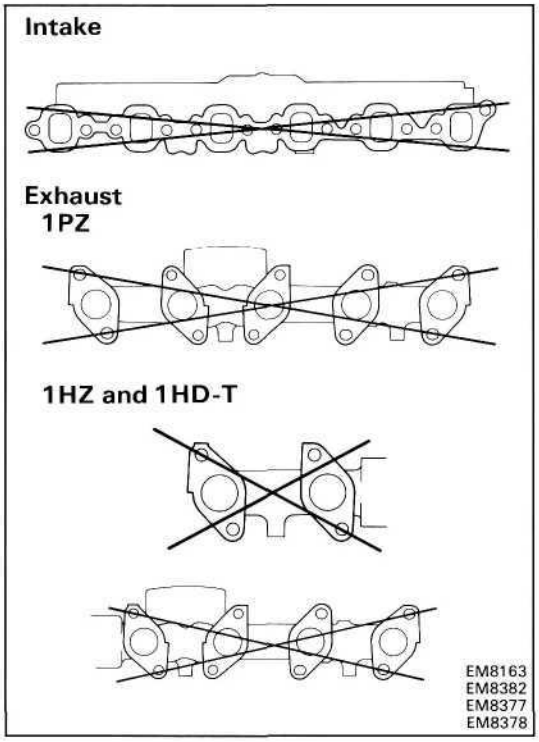

16. INSPECT INTAKE AND EXHAUST MANIFOLDS

Using a precision straight edge and thickness gauge, measure the surface contacting the cylinder head for warpage.

Maximum warpage: **0.40 mm (0.0157 in.)**

If warpage is greater than maximum, replace the manifold.

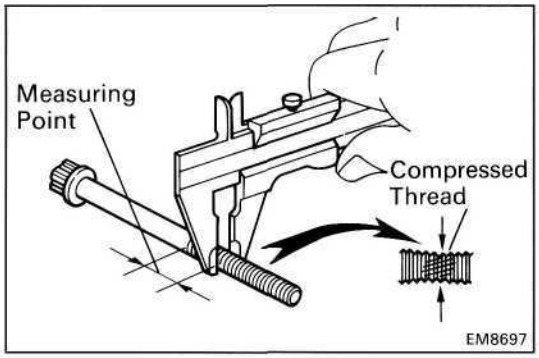

17. INSPECT CYLINDER HEAD BOLTS

Using vernier calipers, measure the minimum outer diameter of the compressed thread at the measuring point.

Standard outer diameter: 10.800-11.000 mm (0.4646-0.4724 in.)

Minimum outer diameter: 10.55 mm (0.4154 in.)

If the outer diameter is less than minimum, replace the bolt.

REPLACEMENT OF CAMSHAFT OIL SEAL

HINT: There are two methods (A and B) to replace the oil seal as follows:

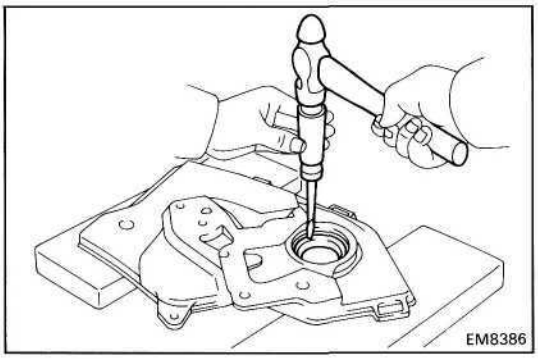

REPLACE CAMSHAFT OIL SEAL

A. If camshaft oil seal retainer is removed from cylinder head:

(a) Using a screwdriver and hammer, tap out the oil seal.

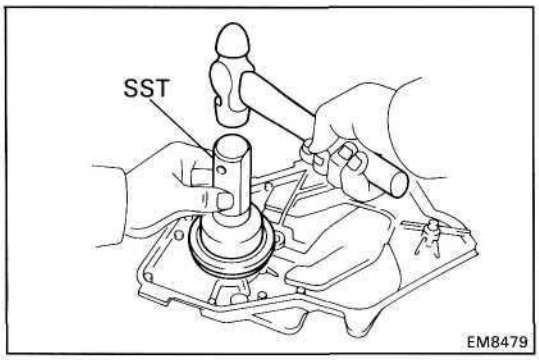

(b) Using SST and a hammer, tap in a new oil seal until its surface is flush with the oil seal retainer edge.

SST 09223-46011

(c) Apply MP grease to the oil seal lip.

B. If camshaft oil seal retainer is installed to the cylinder head:

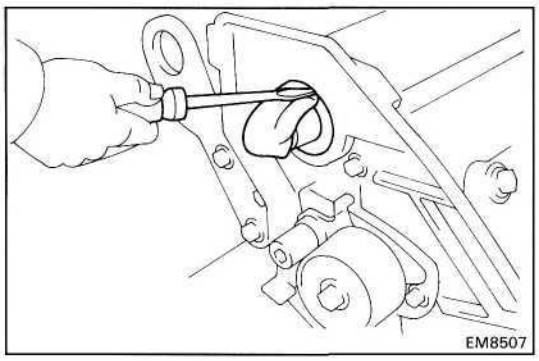

(a) Using a screwdriver, pry out the oil seal.

NOTICE: Be careful not to damage the camshaft. Tape the screwdriver tip.

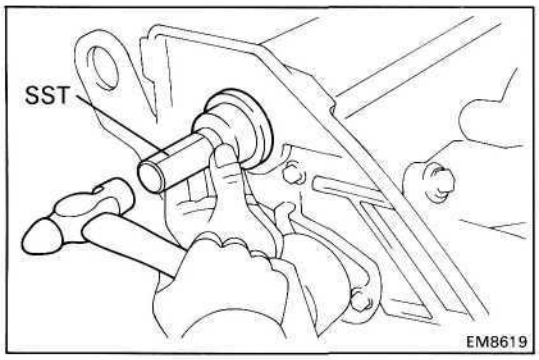

(b) Apply MP grease to a new oil seal lip.

(c) Using SST and a hammer, tap in the oil seal until its surface is flush with the oil seal retainer edge.

SST 09223-46011

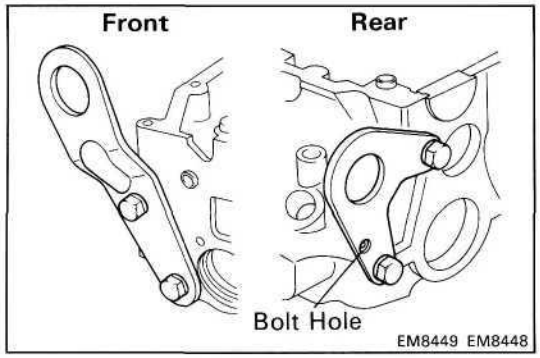

ASSEMBLY OF CYLINDER HEAD

(See page EM-54)

HINT:
- Thoroughly clean all parts to be assembled.
- Before installing the parts, apply new engine oil to all sliding and rotating surfaces.
- Replace all gaskets and oil seals with new ones.

1. INSTALL FRONT AND REAR ENGINE HANGERS

Install the engine hangers as shown in the illustration.

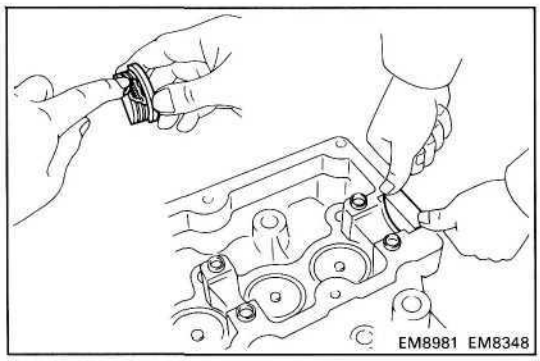

2. INSTALL HALF CIRCULAR PLUG

(a) Remove any old packing (FIPG) material.

(b) Apply seal packing to the half circular plug as shown.

Seal packing: Part No. 08826-00080 or equivalent

(c) Install the half circular plug to the cylinder head.

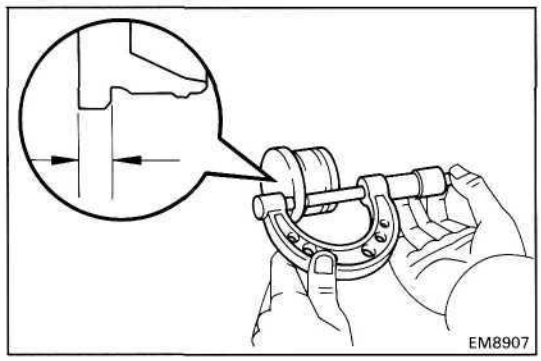

3. SELECT COMBUSTION CHAMBER SHIM

A. If using new **combustion chamber:**

Using a micrometer, measure the thickness of each used combustion chamber at the position shown in the illustration, then select the number of shims to be used.

Combustion chamber thickness mm (in.)	No. of shims to be used
6.02 – 6.05 (0.2370 – 0.2382)	0
6.06 – 6.08 (0.2386 – 0.2394)	1
6.09 – 6.11 (0.2398 – 0.2406)	2

Shim thickness: 0.03 mm (0.0012 in.)

NOTICE: If combustion chamber shims were already being used, do not perform the above step; use the same number of shims as were used before.

B. If reusing combustion chamber:

Install the combustion chamber back in the same position it was originally at.

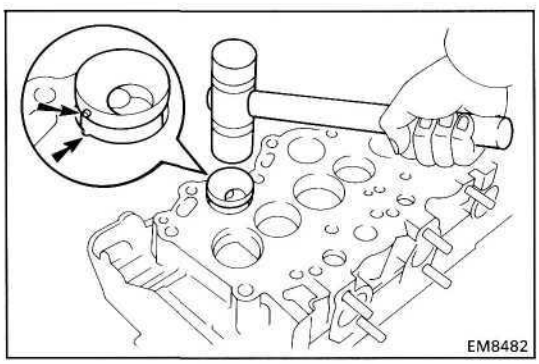

4. (1PZand1HZ)
INSTALL COMBUSTION CHAMBERS

(a) Align the knock pin of the combustion chamber with the notch of the cylinder head.

(b) Using a plastic-faced hammer, tap in the (shim and) combustion chamber.

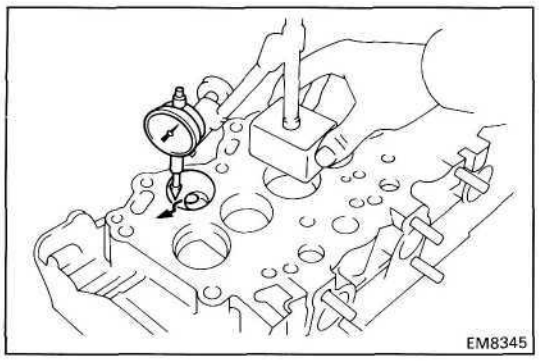

(c) Using a dial indicator, measure the protrusion of the combustion chamber from the cylinder head.

Protrusion: Minus 0.04-Plus 0.04 mm
(Minus 0.0016- Plus 0.0016 in.)

If the protrusion is less than specified, adjust with shims.

Shim thickness: 0.03 mm (0.0012 in.)

If the protrusion is greater than specification, replace the chamber and recheck the protrusion.

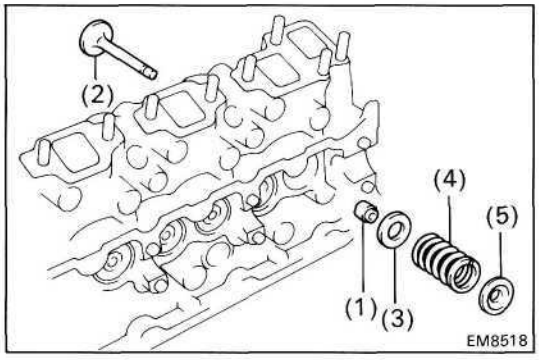

5. INSTALL VALVES

(a) Install the following parts:
(1) Oil seal
(2) Valve
(3) Spring seat
(4) Valve spring
(5) Spring retainer

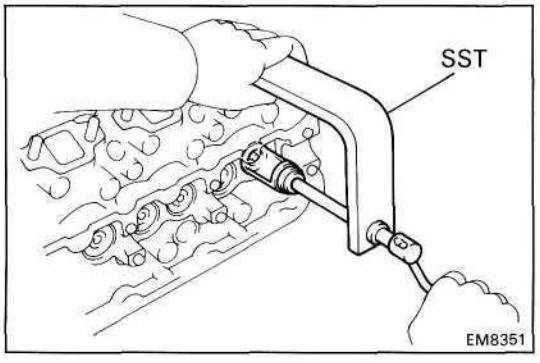

(b) Using SST, compress the valve spring and place the two keepers around the valve stem.

SST 09202-43013

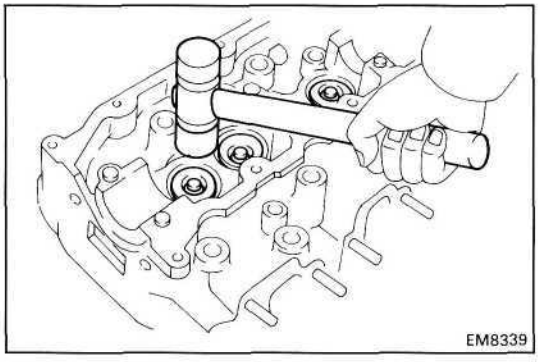

(c) Using a plastic-faced hammer, lightly tap the valve stem tip to assure proper fit.

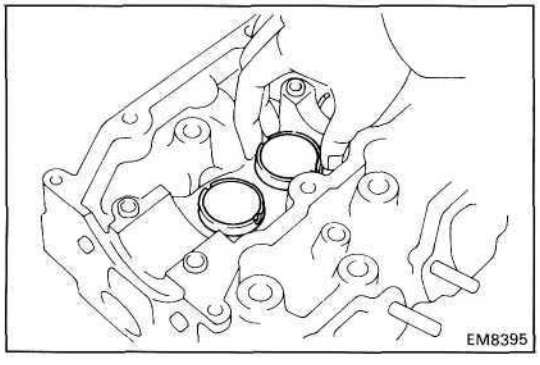

6. INSTALL VALVE LIFTERS AND SHIMS

Check the valve lifter rotates smoothly by hand.

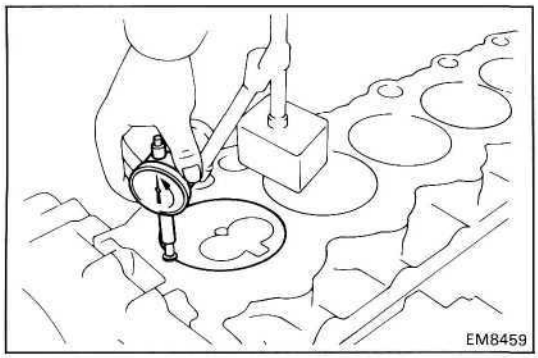

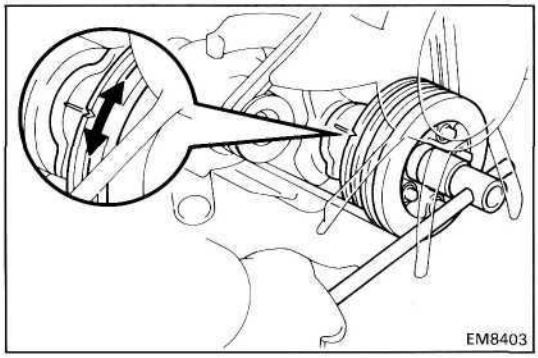

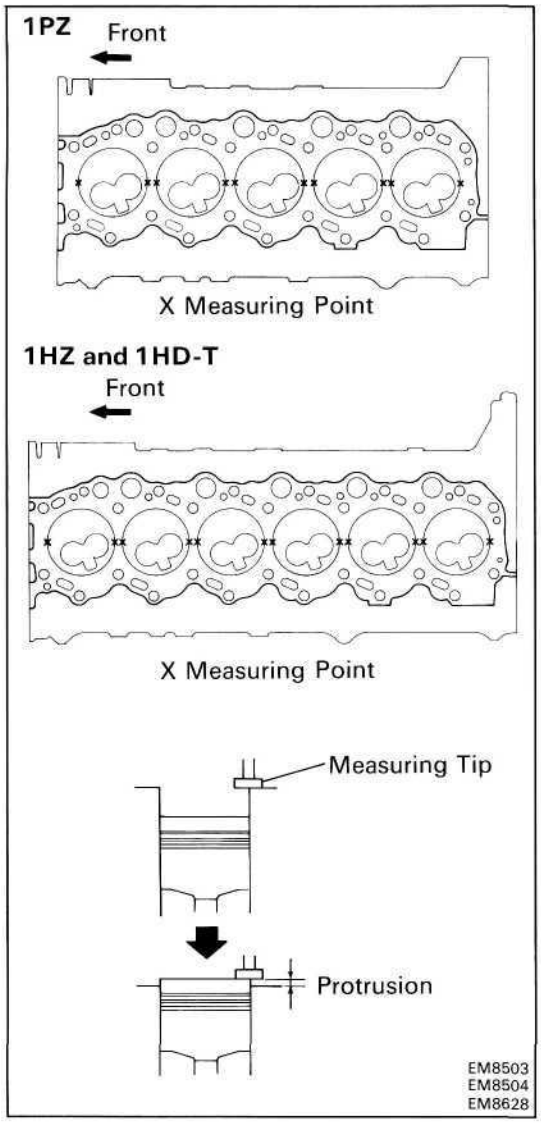

INSTALLATION OF CYLINDER HEAD

(See page EM-54)

1. CHECK PISTON PROTRUSION AND SELECT CYLINDER HEAD GASKET

A. Check piston protrusions each cylinder

(a) Clean the cylinder block solvent.

(b) Set the piston of the cylinder to be measured to slightly befor TDC.

(c) Place a dial indicator on the cylinder block, and set the dial indicator at 0 mm (0 in.)

HINT:

- Use a dial indicator measuring tip as shown in the illustration.
- Make sure that the measuring tip is sqaure to the cylinder block gasket surface and piston head when taking the measurments.

(d) Find where the piston head protrudes most by slowly turning the crankshaft clockwise and counterclockwise.

(e) Measure each cylinder at two places as shown in the illustration, making a tatal of ten measurements (1PZ) or twelve measurements (1 HZ and 1HD-T).

(f) For the piston protrusion value of each cylinder, use the average of the two measurements of each cylinder.

Protrusion:

IPZ and 1HZ

0.405-0.655 mm (0.0159-0.0258 in.)

1HD-T

0.475-0.725 mm (0.0187-0.0285 in.)

(When removing piston and connecting rod assembly)

If the protrusion is not as specified, remove the piston and connecting rod assembly (See page EM-86) and reinstall it (See page EM-108).

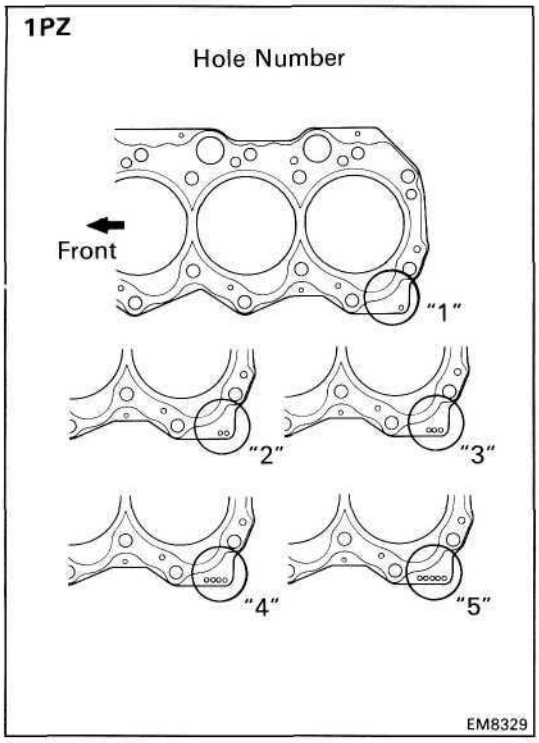

B. Select new cylinder head gasket (1PZ)

HINT: There are five types of cylinder head gasket (hole number 1 to 5) installed at factory, but only three types for supply parts (hole number "1", "3" and "5"), so when replacing the gasket select from one of three types above.

New cylinder head gasket thickness:

Hole number "1"	**1.16-1.24 mm (0.0457-0.0488 in.)**
Hole number "3"	**1.26-1.34 mm (0.0496-0.0528 in.)**
Hole number "5"	**1.36-1.44 mm (0.0535-0.0567 in.)**

Select the largest piston protrusion value from the measurements made, then select the appropriate cylinder head gasket according to the table below.

Piston protrusion mm (in.)	Gasket size
0.455 (0.0179) or less	Use "1"
0.456 – 0.555 (0.0180 – 0.0219)	Use "3"
0.556 (0.0219) or more	User "5"

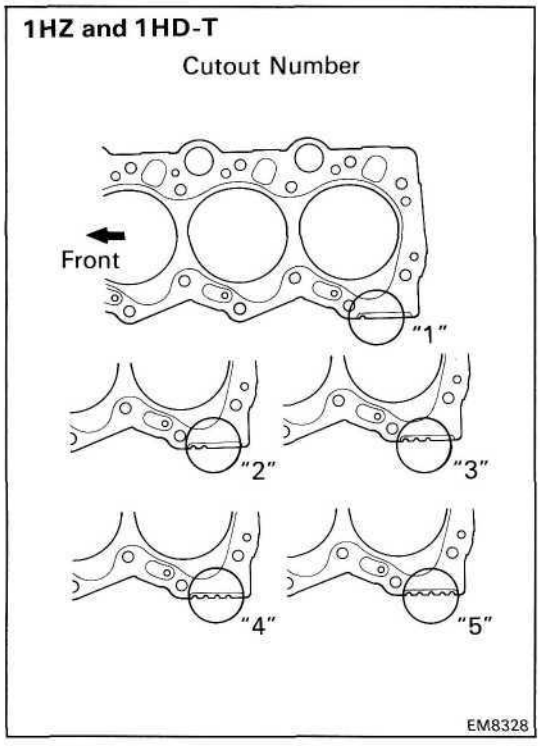

(1HZ and 1HD-T)

HINT: There are five types of cylinder head gasket (cutout number 1 to 5) installed at factory, but only three types for supply parts (cutout number "1", "3" and "5"), so when replacing the gasket select from one of three types above.

New **cylinder head gasket thickness:**

Cutout number "1"	**1.15-1.25 mm (0.0453-0.0492 in.)**
Cutout number "3"	**1.25-1.35 mm (0.0492-0.0531 in.)**
Cutout number "5"	**1.35-1.45 mm (0.0531 -0.0571 in.)**

Select the largest piston protrusion value from the measurements made, then select the appropriate cylinder head gasket according to the table below.

1HZ

Poston protrusion mm (in.)	Gasket size
0.455 (0.0179) or less	Use "1"
0.456 – 0.555 (0.0180 – 0.0219)	Use "3"
0.556 (0.0246) or more	Use "5"

1HD-T

Piston protrusion mm (in.)	Gasket size
0.525 (0.0207) or less	Use "1"
0.526 – 0.625 (0.0207 – 0.0246)	Use "3"
0.626 (0.0246) or more	Use "5"

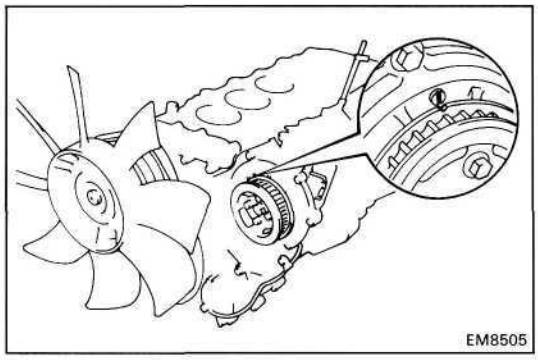

2. SET N0.1 CYLINDER TO BDC

Turn the crankshaft pulley, and align the BDC mark of the timing gear cover with the No.1 flange groove of the No.2 camshaft timing pulley.

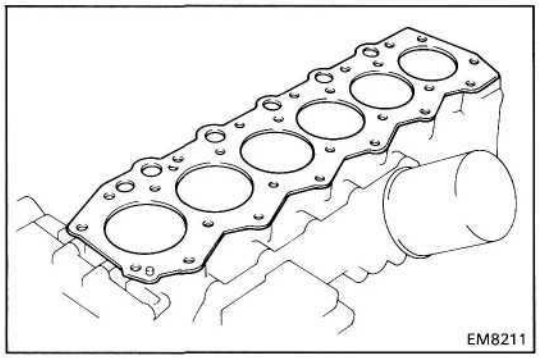

3. INSTALL CYLINDER HEAD

A. Place cylinder head on cylinder block

(a) Place a new cylinder head gasket in position on the cylinder block.

NOTICE: Be careful of the installation direction.

(b) Place the cylinder head in position on the cylinder head gasket.

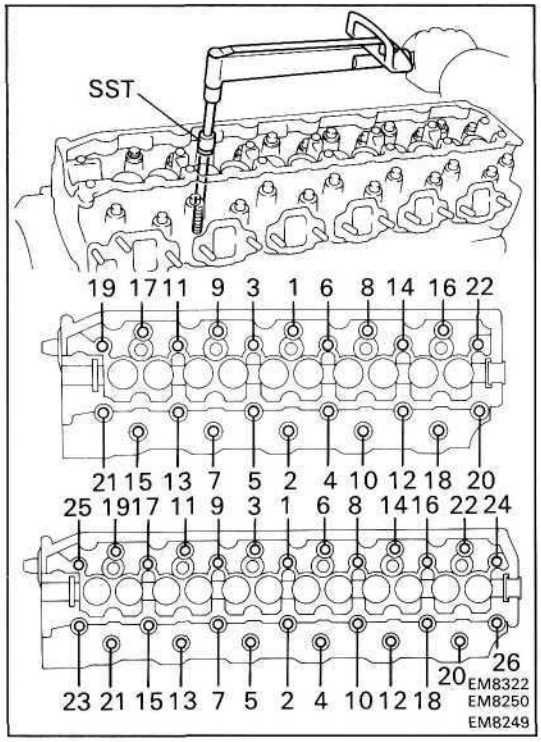

B. Install cylinder head bolts

HINT:

- The cylinder head bolts are tightened in three progressive steps.
- If any of bolts break or deform, replace them.

(a) Apply a light coat of engine oil on the threads and under the heads of the cylinder head bolts.

(b) First, using SST, install and uniformly tighten the twenty-two cylinder head bolts (1 PZ) or twenty-six cylinder head bolts (1 HZ and 1HD-T) in several passes in the sequence shown.

SST 09011 -38121

Torque: 700 kg-cm (51 ft-lb, 69 N·m)

If any one of the bolts does not meet the torque specification, replace the bolt.

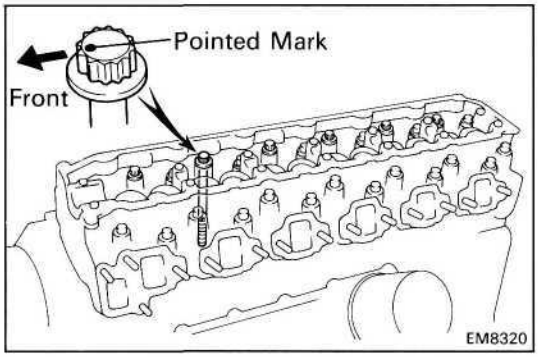

(c) Mark the front of the cylinder head bolt head with paint.

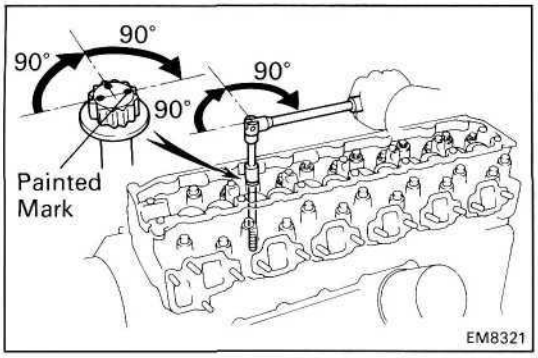

(d) 2nd, retighten the cylinder head bolts 90° in the numerical order shown above.

(e) 3rd, retighten cylinder head bolts by an additional 90°.

(f) Check that the painted mark is now facing rearward.

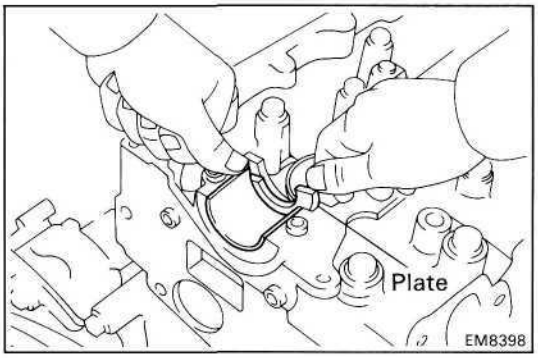

4. INSTALL CAMSHAFT

(a) Install the camshaft thrust plate to the cylinder head.

(b) Install the camshaft bearings to the No.1 bearing cap and No.1 journal of the cylinder head.

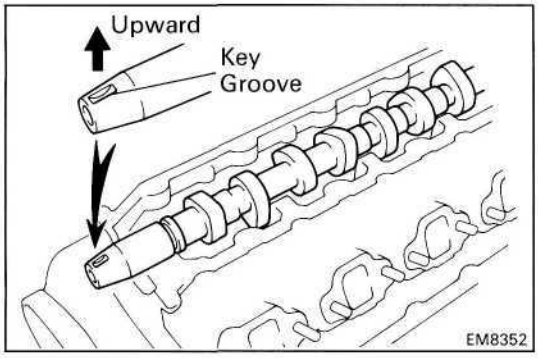

(c) Place the camshaft on the cylinder head, facing the key groove upward.

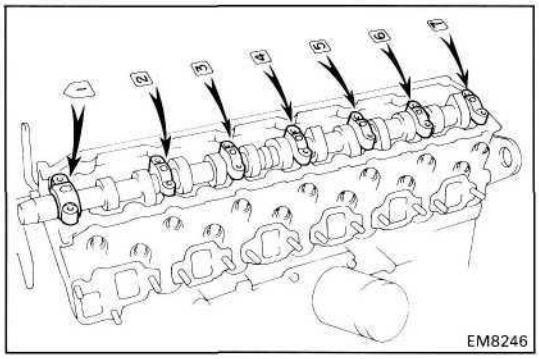

(d) Install the six (1PZ) or seven (1 HZ and 1HD-T) bearing caps in their proper locations.

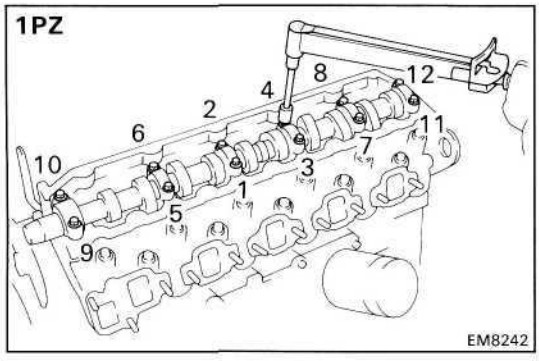

(e) (1PZ)
Install and uniformly tighten the twelve bearing cap bolts in several passes in the sequence shown.

Torque:

No.1 journal	**250 kg-cm (18 ft-lb, 25 N-m)**
Others	**185 kg-cm (13 ft-lb, 18 N-m)**

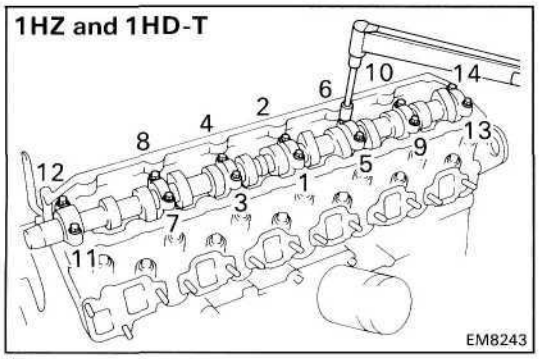

(f) (1HZ and 1HD-T)
Install and uniformly tighten the fourteen bearing cap bolts in several passes in the sequence shown.

Torque:
No.1 journal 250 kg-cm (18 ft-lb, 25 N-m)
Others 185 kg-cm (13 ft-lb, 18 N-m)

5. ADJUST VALVE CLEARANCE (See page EM-19)

Valve clearance (Cold):
Intake 0.15-0.25 mm (0.006-0.010 in.)
Exhaust 0.35-0.45 mm (0.014-0.018 in.)

6. INSTALL CAMSHAFT OIL SEAL RETAINER

(a) Remove any old packing (FIPG) material and be careful not to drop any oil on the contact surfaces of the camshaft oil seal retainer and cylinder head.
- Using a razor blade and gasket scraper, remove all the old packing (FIPG) material from the gasket surfaces and sealing groove.
- Thoroughly clean all components to remove all the loose material.
- Using a non-residue solvent, clean both sealing surfaces.

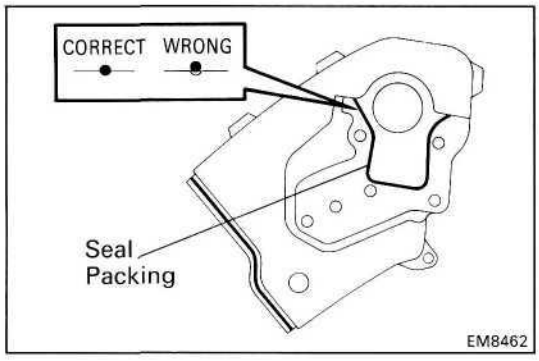

(b) Apply seal packing to the camshaft oil seal retainer as shown in the illustration.

Seal packing: Part No.08826-00080 or equivalent
- Install a nozzle that has been cut to a 2 - 3 mm (0.08-0.12 in.) opening.
- Parts must be assembled within 5 minutes of application. Otherwise the material must be removed and reapplied.
- Immediately remove nozzle from the tube and reinstall cap.

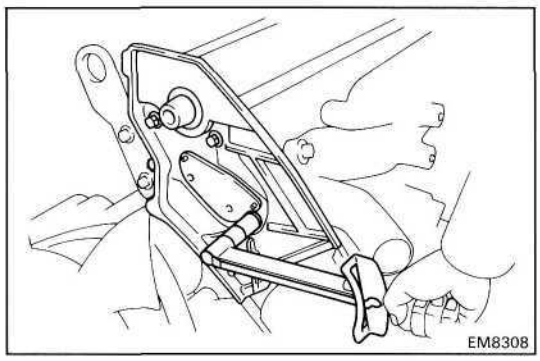

(c) Install the retainer with the four bolts.

Torque: 200 kg-cm (14 ft-lb, 20 N-m)

7. INSTALL PULLEYS AND TIMING BELT
(See steps 2 to 4 and 6 to 11 on pages EM-38 to 41)

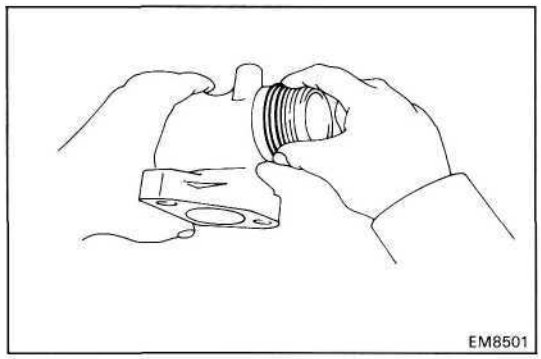

8. (1HZand1HD-T)
ASSEMBLY EXHAUST MANIFOLDS

(a) Remove all the O-ring material from the manifold grooves.

(b) Install new O-rings.

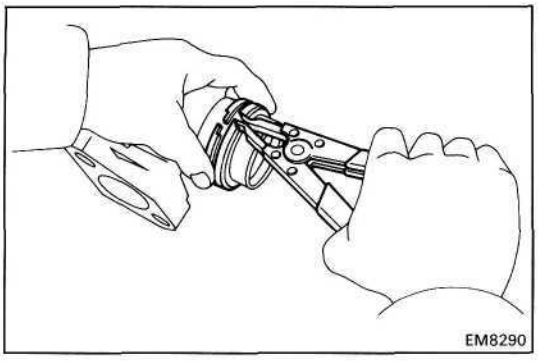

(c) Using snap ring pliers, install the two manifold rings.

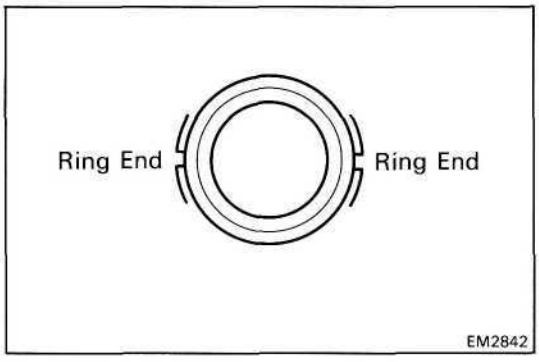

(d) Position the manifold rings so that the ring ends are as shown.

NOTICE: Do not align the ends.

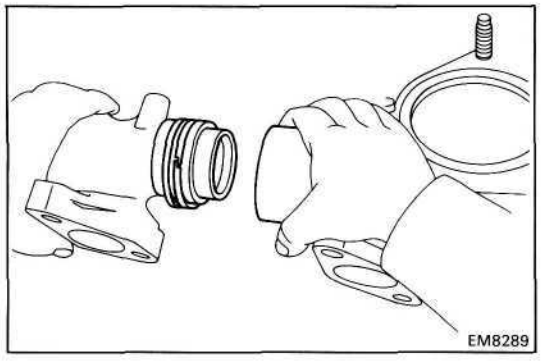

(e) Install the manifold collar.

(f) Assembly the front and rear manifolds.

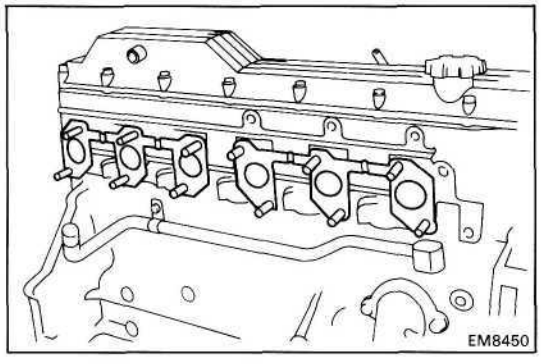

9. (1PZandiHZ)
INSTALL EXHAUST MANIFOLD

(a) Install new gaskets in direction as shown in the illustration.

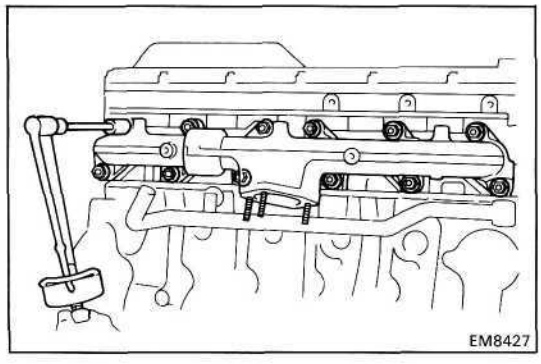

(b) Install the exhaust manifold with the ten nuts (1PZ) or twelve nuts (1HZ).

Torque: 400 kg-cm (29 ft-lb, 39 N-m)

HINT: Apply 330 kg-cm (24 ft-lb, 32 N-m) of torque when performing additional tightening of loosed nuts.

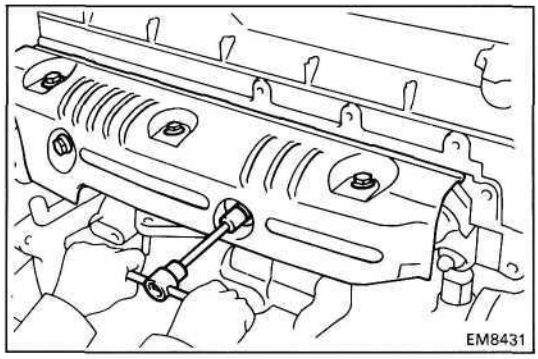

(c) Install the heat insulator with the four bolts (1PZ) or five bolts (1HZ).

10. (1HD-T)
INSTALL TURBOCHARGER AND EXHAUST MANIFOLD
(See steps 4 to 10 on pages TC-13 to 15)

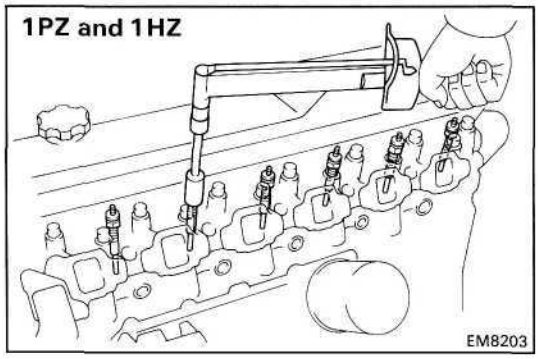

11. INSTALL GLOW PLUG

(a) Using a 12 mm deep socket wrench, install the five glow plugs (1PZ) or six glow plugs (1HZ and 1HD-T).

Torque: 130 kg-cm (9 ft-lb, 13 N·m)

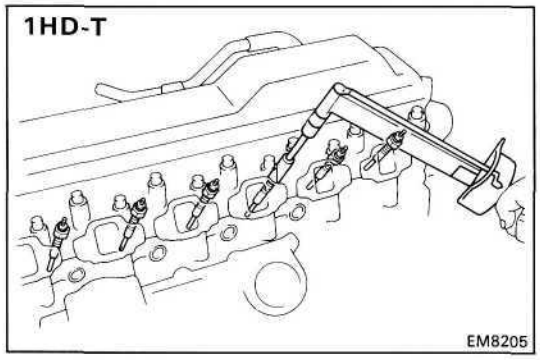

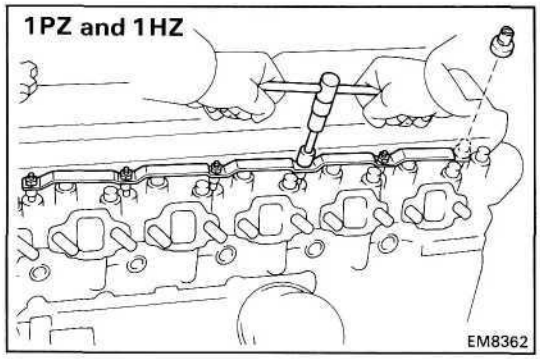

(b) Install the glow plug connector with the five nuts (1 PZ) or six nuts (1 HZ and 1 HD-T).

(c) Install the five screw grommets (1 PZ) and six screw grommets (1 HZ and 1 HD-T).

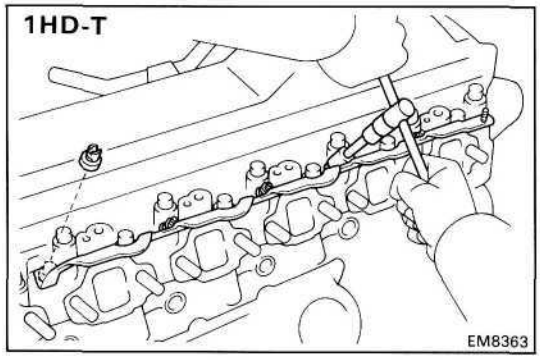

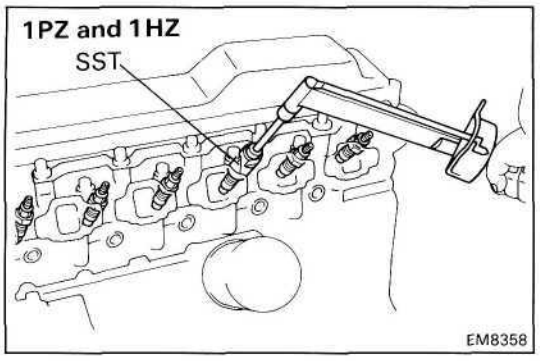

12. INSTALL INJECTION NOZZLES (1PZ and 1HZ)

(a) Place new gaskets and the nozzle seats into the injection nozzle holes of the cylinder head.

(b) Using SST, install the injection nozzles.

SST 09268-64010

Torque: 650 kg-cm (47 ft-lb, 64 N-m)

NOTICE: Over torquing could cause nozzle deformation and needle adhesion or other defects.

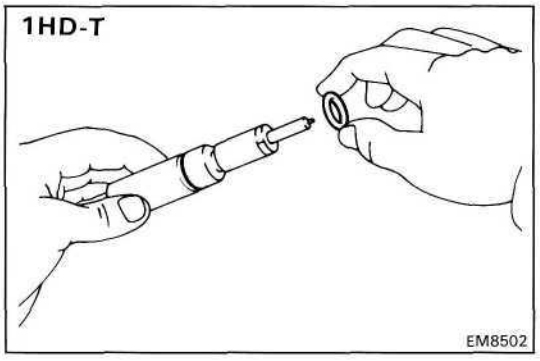

(1HD-T)

(a) Install a new O-ring to the injection nozzle.

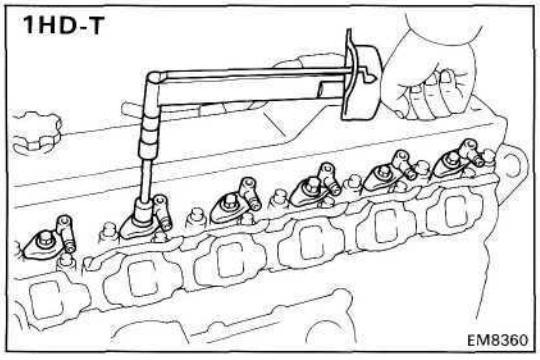

(b) Place new nozzle seats into the injection nozzle holes of the cylinder head.

(c) Install the injection nozzles with the washer and bolt.

Torque: 400 kg-cm (29 ft-lb, 39 N·m)

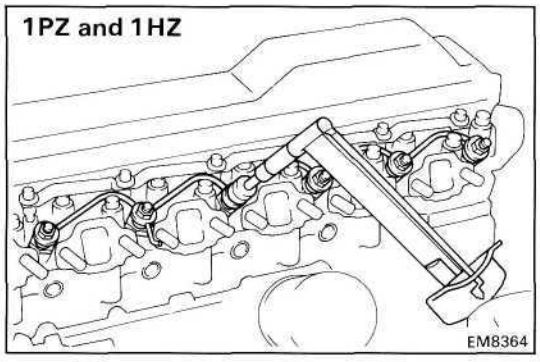

13. INSTALL NOZZLE LEAKAGE PIPE (1PZand1HZ)

(a) (1PZ)
Install five new gaskets and the leakage pipe with the five nuts.

Torque: 300 kg-cm (22 ft-lb, 29 N·m)

(b) (1HZ)
Install six new gaskets and the leakage pipe with the six nuts.

Torque: 300 kg-cm (22 ft-lb, 29 N-m)

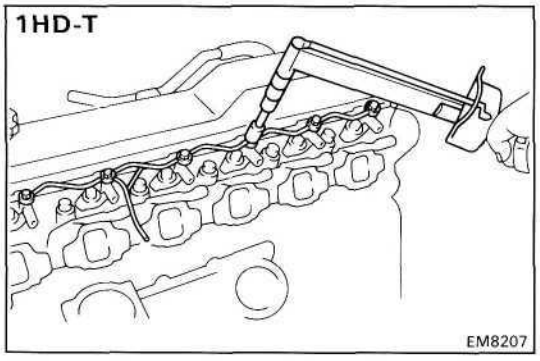

(1HD-T)

Install twelve new gaskets and the leakage pipe with the six hollow bolts.

Torque: 125 kg-cm (9 ft-lb, 12 N-m)

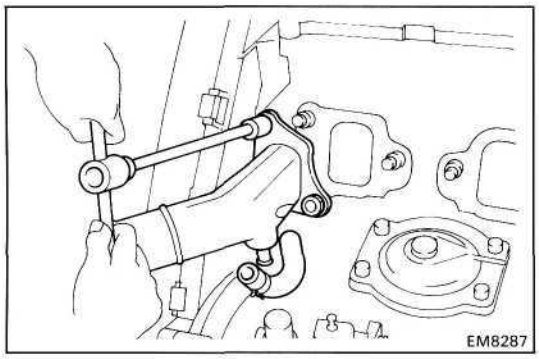

14. INSTALL WATER OUTLET

(a) Install a new gasket and water outlet with the two nuts.

Torque: 200 kg-cm (14 ft-lb, 20 N·m)

(b) (1HD-T)
Connect the water by-pass hose.

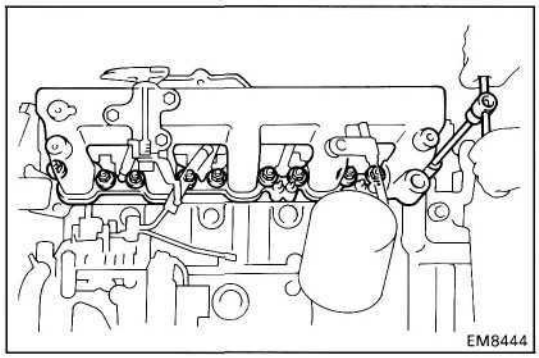

15. INSTALL INTAKE MANIFOLD

(a) (1PZ)
Install five new gaskets and the intake manifold with the ten bolts and seal washers.

Torque: 200 kg-cm (14 ft-lb, 20 N·m)

(b) (1 HZ and 1HD-T)
Install six new gaskets and the intake manifold with the twelve bolts and seal washers.

Torque: 200 kg-cm (14 ft-lb, 20 N·m)

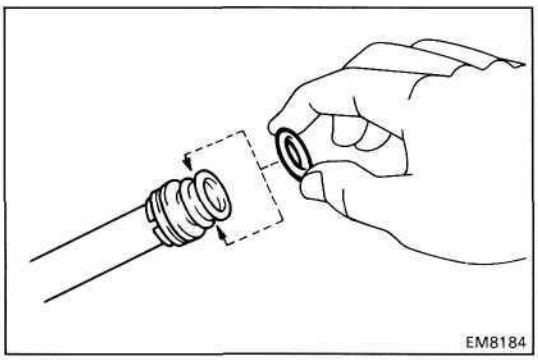

16. INSTALL OIL DIPSTICK GUIDE AND OIL DIPSTICK

(a) Install a new O-ring to the dipstick guide.

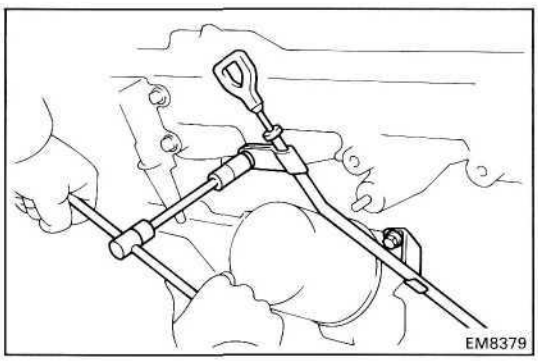

(b) Install the oil dipstick guide assembly with the two bolts.

Torque:
Intake manifold side
200 kg-cm (14 ft-lb, 20 N·m)
Oil cooler cover side
200 kg-cm (14 ft-lb, 20 N·m)

17. INSTALL INJECTION PIPES
(See step 3 on page FU-15)

Torque:

IPZandiHZ	**150 kg-cm (11 ft-lb, 15 N·m)**
1HD-T	**250 kg-cm (18 ft-lb, 25 N·m)**

18. INSTALL INTAKE PIPE
(See step 2 on page EM-38)

19. FILL WIT ENGINE COOLANT (See page CO-5)

20. START ENGINE AND CHECK FOR LEAKS

21. RECHECK ENGINE COOLANT LEVEL AND OIL LEVEL

CYLINDER BLOCK

COMPONENTS

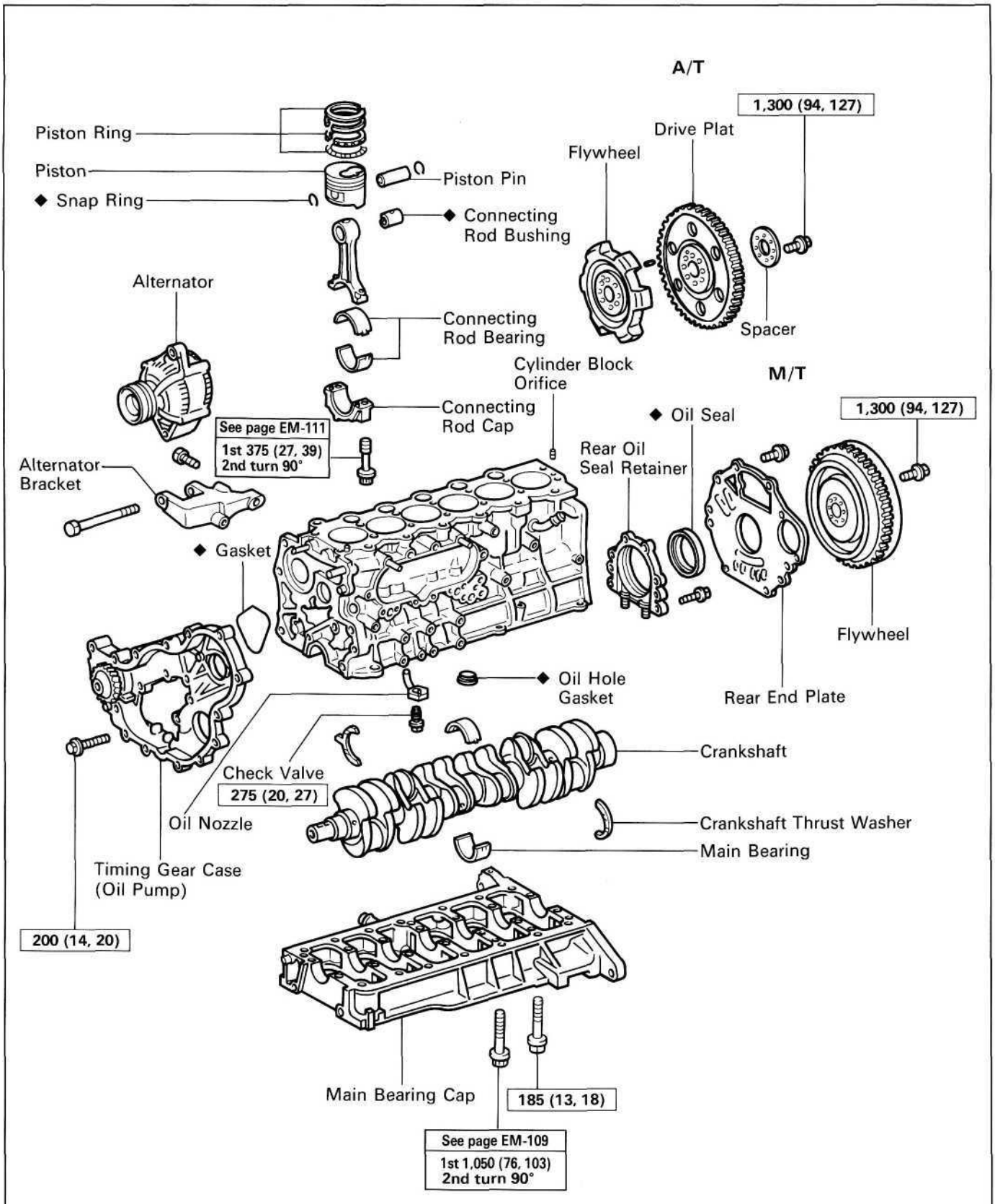

kg-cm (ft-lb, N·m) : Specified torque

◆ Non-reusable part

EM8499

PREPARATION FOR DISASSEMBLY

1. (M/T)
REMOVE CLUTCH COVER AND DISC

2. (M/T)
REMOVE FLYWHEEL

3. (A/T)
REMOVE DRIVE PLATE AND FLYWHEEL

Remove the drive plate rear spacer, drive plate and flywheel.

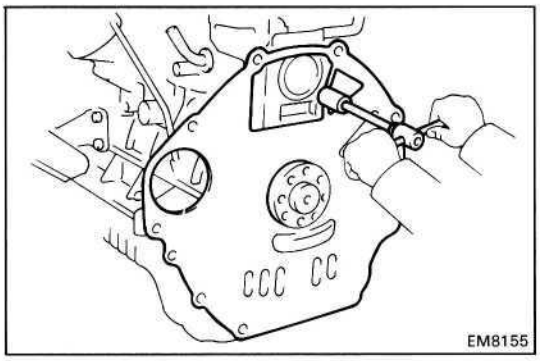

4. REMOVE REAR END PLATE

Remove the bolt, end plate and dust cover.

5. INSTALL ENGINE TO ENGINE STAND FOR DISASSEMBLY

6. REMOVE TIMING BELT AND PULLEYS (See page EM-33)

7. REMOVE CYLINDER HEAD (See page EM-55)

8. REMOVE WATER PUMP (See page CO-6)

9. REMOVE ALTERNATOR

10. REMOVE TIMING GEARS (See page EM-43)

11. REMOVE INJECTION PUMP (See page FU-27)

12. REMOVE OIL PAN AND TIMING GEAR CASE (OIL PUMP) (See page LU-8)

13. REMOVE OIL COOLER (See page LU-14)

14. REMOVE WATER INLET AND THERMOSTAT

15. REMOVE ENGINE MOUNTING

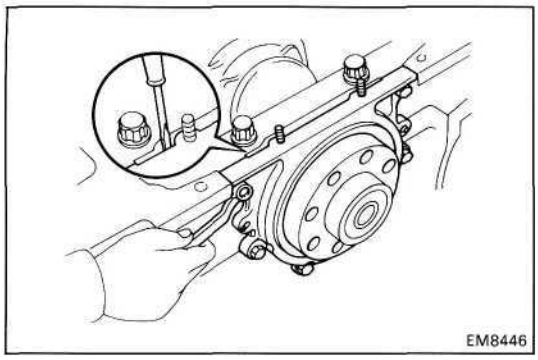

DISASSEMBLY OF CYLINDER BLOCK

(See page EM-84)

1. REMOVE REAR OIL SEAL RETAINER

Remove the six bolts and retainer.

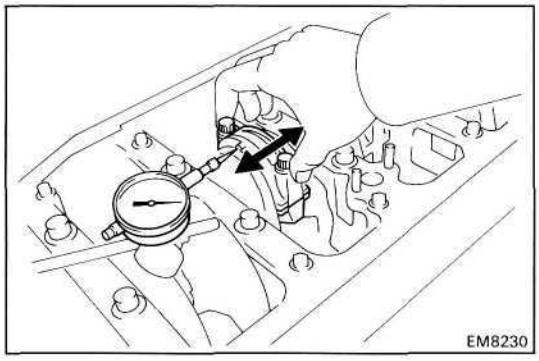

2. CHECK CONNECTING ROD THRUST CLEARANCE

Using a dial indicator, measure the thrust clearance while moving the connecting rod back and forth.

Standard thrust clearance: 0.10-0.20 mm (0.0038-0.0079 in.)

Maximum thrust clearance: 0.30 mm (0.0118 in.)

If the thrust clearance is greater than maximum, replace the connecting rod assembly. If necessary, replace the crankshaft.

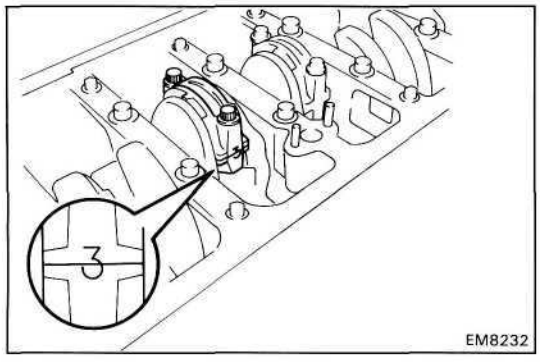

3. REMOVE CONNECTING ROD CAPS AND CHECK OIL CLEARANCE

(a) Using paint, place the matchmarks on the connecting rod and cap to ensure correct reassembly.

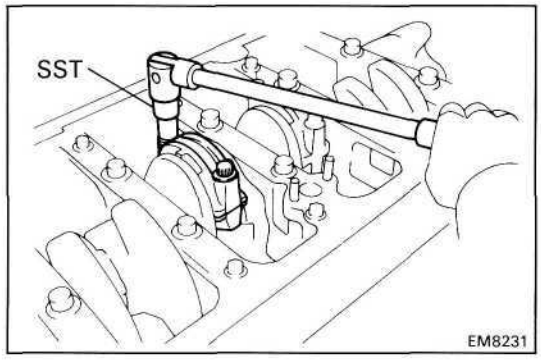

(b) Using SST, remove the connecting rod cap bolts.

SST 09011-381 21

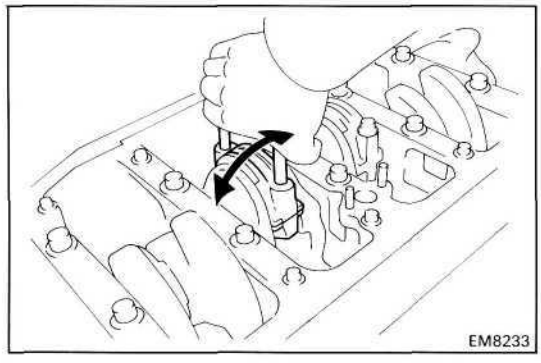

(c) Using the removed connecting rod cap bolts, pry the connecting rod cap back and forth, and remove the connecting cap.

HINT: Keep the lower bearing inserted with the connecting rod cap.

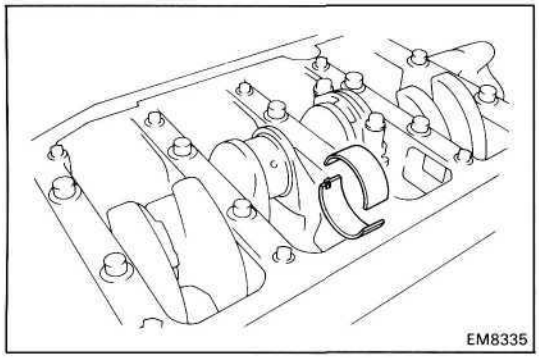

(d) Clean crank pin and bearing.

(e) Check the crank pin and bearing for pitting and scratches.

If the crank pin or bearing is damaged, replace the bearings. If necessary, grind or replace the crankshaft.

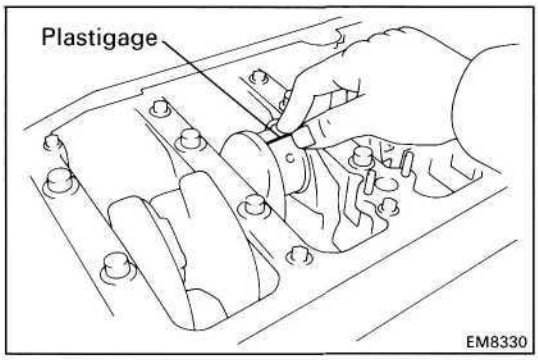

(f) Lay a strip of Plastigage across the crank pin.

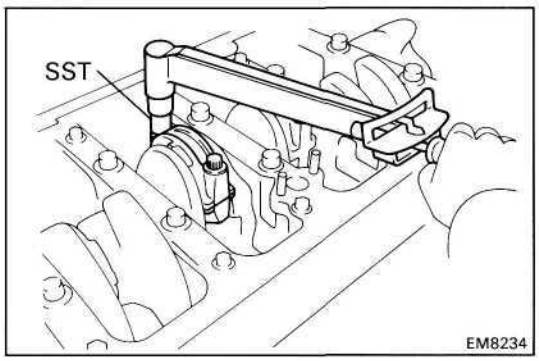

(g) Install the connecting rod cap.
(See step 8 on page EM-111)

Torque: 1st 375 kg-cm (27 ft-lb, 37 N·m)
2nd turn 90°

HINT: Do not turn the crankshaft.

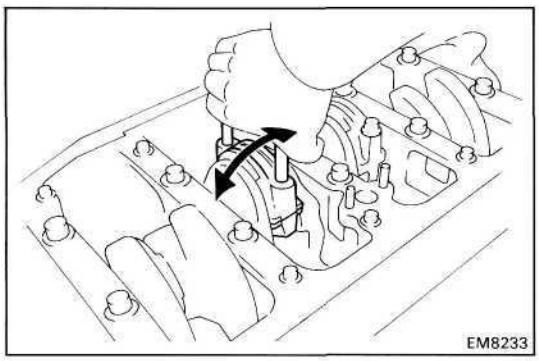

(h) Remove the connecting rod cap.
(See procedure (b) and (c) above)

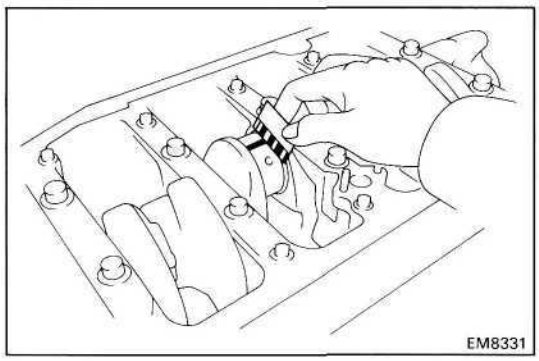

(i) Measure the Plastigage at widest point.

Standard oil clearance:
STD 0.036-0.054 mm
(0.0014-0.0021 in.)
U/S 0.25 and U/S 0.50
0.037 - 0.077 mm
(0.0015 - 0.0030 in.)

Maximum oil clearance: 0.10 mm (0.0039 in.)

If the oil clearance is greater than maximum, replace the bearings. If necessary, grind or replace the crankshaft.

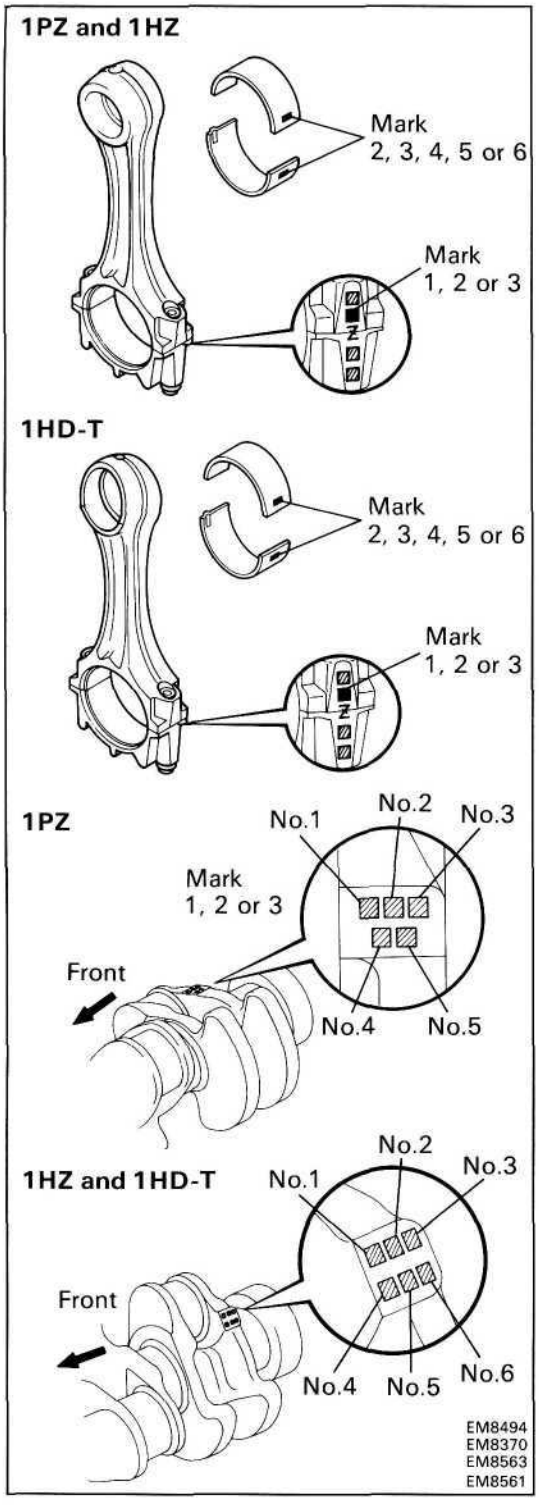

HINT: If using a standard bearing, replace with one having the same number. If the number of the bearing cannot be determined, select the correct bearing by adding together the numbers inprinted on the crankshaft and connecting rod, then selecting the bearing with the same number as the total. There are five sizes of standard bearings, marked *"2",* "3", "4", "5" and "6" accordingly.

	Number marked								
Connecting rod	1			2			3		
Crankshaft	1	2	3	1	2	3	1	2	3
Bearing	2	3	4	3	4	5	4	5	6

EXAMPLE: Connecting rod "2" + Crankshaft "1" = Total number (Use bearing "3")

(Reference)

Connecting rod big end inner diameter:

Mark"1" 62.014-62.020 mm (2.4415-2.4417 in.)
Mark "2" 62.020-62.026 mm (2.4417-2.4420 in.)
Mark "3" 62.026-62.032 mm (2.4420-2.4422 in.)

Crankshaft pin diameter:

Mark "1" 58.994-59.000 mm (2.3226-2.3228 in.)
Mark "2" 58.988 - 58.994 mm (2.3224-2.3226 in.)
Mark "3" 58.982 - 58.988 mm (2.3221-2.3224 in.)

Standard sized bearing center wall thickness:

Mark "2" 1.486-1.489 mm (0.0585-0.0586 in.)
Mark "3" 1.489-1.492 mm (0.0586-0.0587 in.)
Mark "4" 1.492-1.495 mm (0.0587-0.0589 in.)
Mark "5" 1.495-1.498 mm (0.0589-0.0590 in.)
Mark "6" 1.498 -1.501 mm (0.0590-0.0591 in.)

(j) Completely remove the Plastigage.

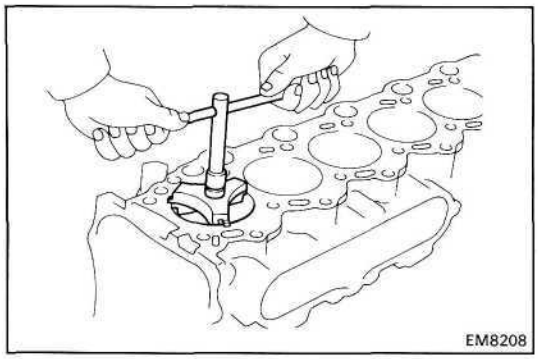

4. REMOVE PISTON AND CONNECTING ROD ASSEMBLIES

(a) Remove the all carbon from the top of the cylinder.

(b) Push the piston, connecting rod assembly and upper bearing through the top of the cylinder block.

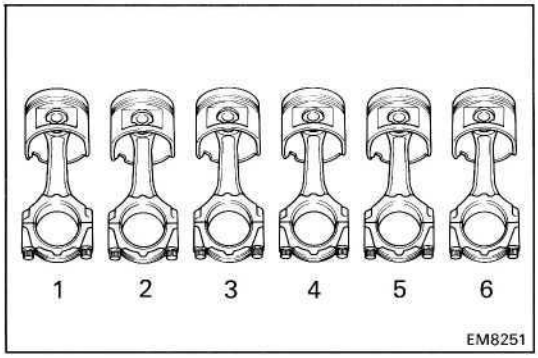

HINT:

- Keep the bearings, connecting rod and cap together.
- Arrange the piston and connecting rod assemblies in correct order.

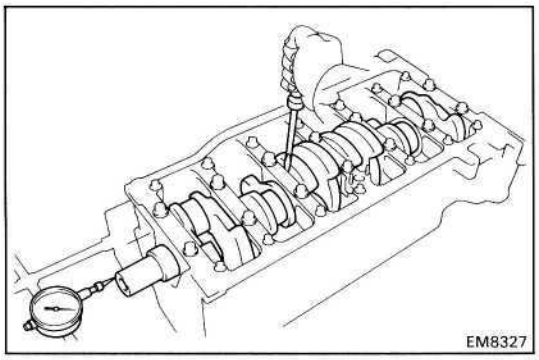

5. CHECK CRANKSHAFT THRUST CLEARANCE

Using a dial indicator, measure the thrust clearance while prying the crankshaft back and forth with a screwdriver.

Standard thrust clearance: 0.04-0.24 mm (0.0016-0.0094 in.)

Maximum thrust clearance: 0.30 mm (0.0118 in.)

If the thrust clearance is greater than maximum, replace the thrust washers as a set.

Thrust washer thickness:
2.930-2.980 mm (0.1154-0.1173 in.)

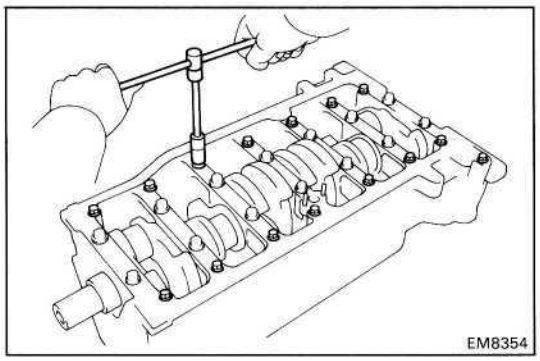

6. REMOVE MAIN BEARING CAP AND CHECK OIL CLEARANCE

(a) Remove the thirteen bolts (1 PZ) or fifteen bolts (1 HZ and 1HD-T).

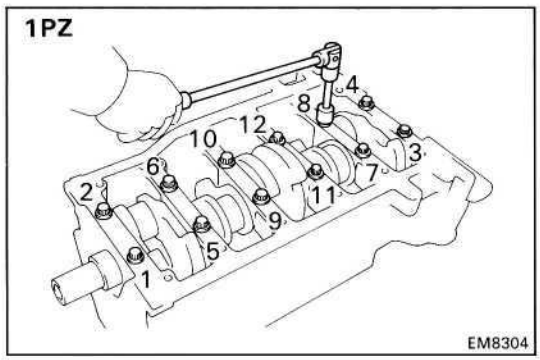

(b) Uniformly loosen and remove the main bearing cap bolts in several passes in the sequence shown.

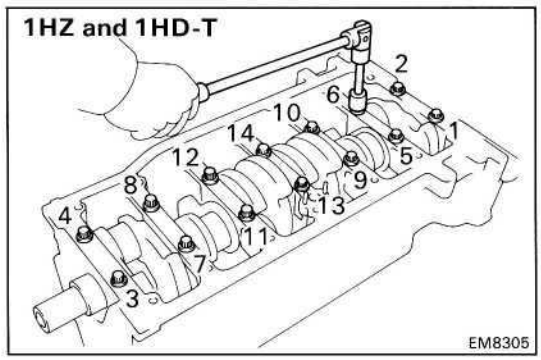

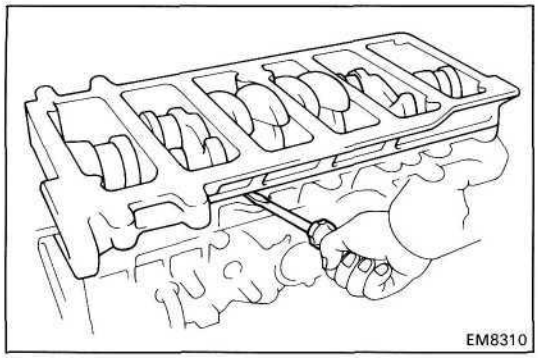

(c) Using a screwdriver, pry out the main bearing cap.

HINT: Keep the lower main bearings and main bearing cap together.

NOTICE: Do not scratch the surface which will be coated with FIPG.

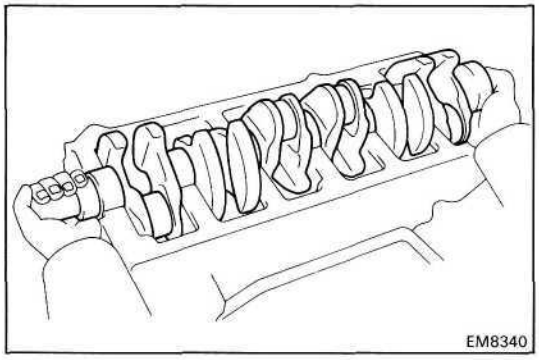

(d) Lift out the crankshaft.

HINT: Keep the upper main bearings and thrust washers together with the cylinder block.

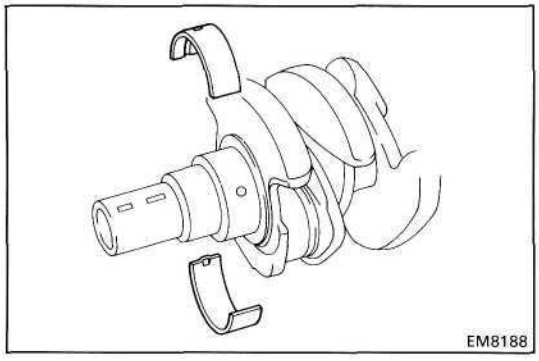

(e) Clean each main journal and bearing.

(f) Check each main journal and bearing for pitting and scratches.

If the journal or bearing are damaged, replace the bearings. If necessary, grind or replace the crankshaft.

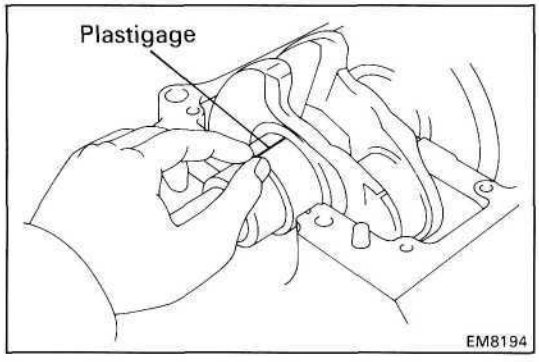

(g) Place the crankshaft on the cylinder block,

(h) Lay a strip of Plastigage across each journal.

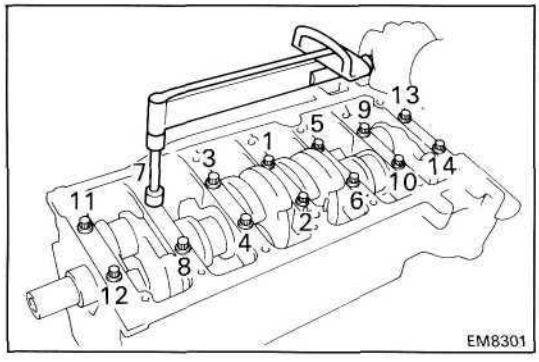

(i) Install the main bearing cap with the bearings. (See step 6 on page EM-109)

Torque: 1st 1,050 kg-cm (76 ft-lb, 103 N·m)
2nd turn 90°

HINT: Do not turn the crankshaft.

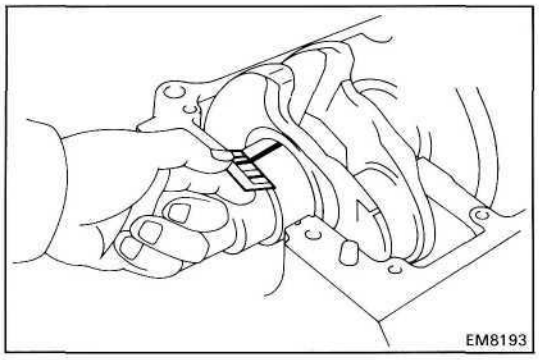

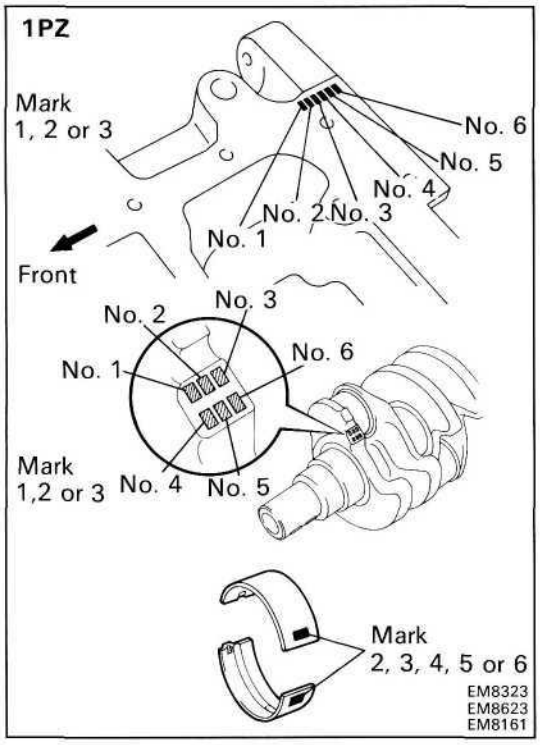

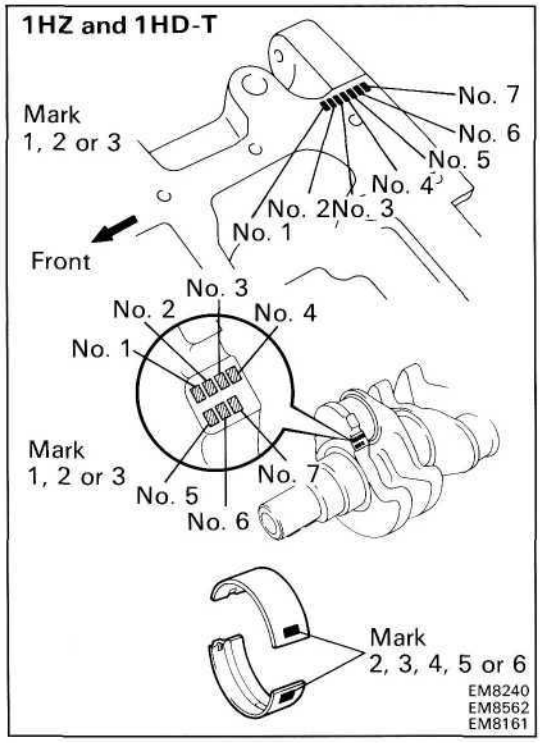

(j) Remove the main bearing cap bolts and cap.

(k) Measure the Plastigage at its widest point.

Standard clearance:

STD	**0.036-0.054 mm (0.0014-0.0021 in.)**
U/S 0.25 and U/S 0.50	**0.037-0.077 mm (0.0015-0.0030 in.)**

Maximum clearance: **0.10 mm (0.0039 in.)**

If the oil clearance is greater than maximum, replace the bearings. If necessary, grind or replace the crankshaft.

HINT: If using a standard bearing, replace with one having the same number. If the number of the bearing cannot be determined, select the correct bearing by adding together the numbers inprinted on the main bearing cap and crankshaft, then selecting the bearing with the same number as the total. There are five sizes of standard bearings, marked "2", "3", "4", "5" and "6" accordingly.

	Number marked								
Main bearing cap	1			2			3		
Crankshaft	1	2	3	1	2	3	1	2	3
Bearing	2	3	4	3	4	5	4	5	6

EXAMPLE: Main bearing cap "2"" + Crankshaft " 1 "
= Total number (Use bearing "3")

(Reference)

Cylinder block main journal bore diameter:

Mark " 1 " 71.000 - 71.006 mm (2.7953-2.7955 in.)
Mark "2" 71.006 - 71.012 mm (2.7955-2.7957 in.)
Mark "3" 71.012-71.018 mm (2.7957-2.7960 in.)

Crankshaft journal diameter:

Mark " 1 " 66.994-67.000 mm (2.6376-2.6378 in.)
Mark "2" 66.988-66.994 mm (2.6373-2.6376 in.)
Mark "3" 66.982 – 66.988 mm (2.6371-2.6373 in.)

(Reference) (Cont'd)
Standard sized bearing center wall thickness:

Mark "2"	**1.979-1.982 mm (0.0779-0.0780 in.)**
Mark "3"	**1.982 -1.985 mm (0.0780-0.0781 in.)**
Mark "4"	**1.985 -1.988 mm (0.0781-0.0783 in.)**
Mark "5"	**1.988-1.991 mm (0.0783-0.0784 in.)**
Mark "6"	**1.991 -1.994 mm (0.0784-0.0785 in.)**

(l) Completely remove the Plastigage.

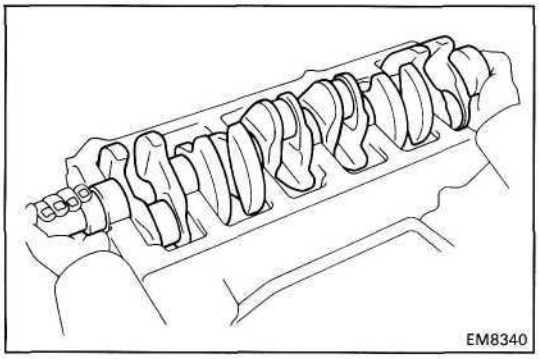
EM8340

7. REMOVE CRANKSHAFT

(a) Lift out the crankshaft.

(b) Remove the upper main bearings and thrust washers from the cylinder block.

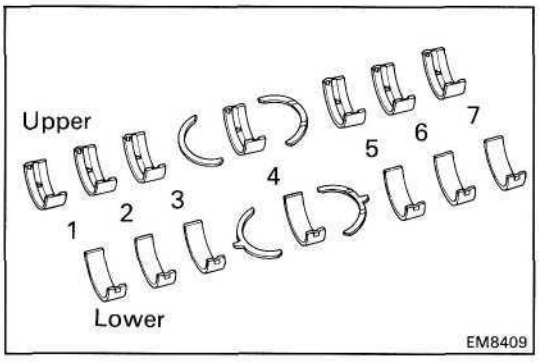

EM8409

HINT: Arrange the main bearings and thrust washers in correct order.

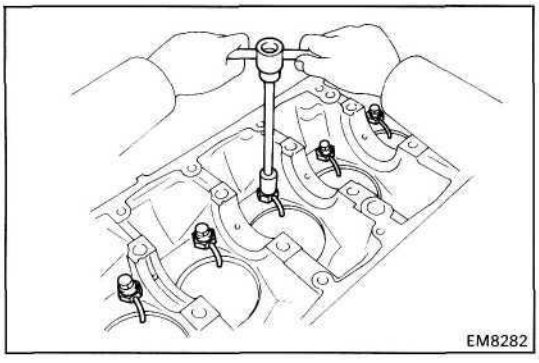
EM8282

8. REMOVE CHECK VALVES AND OIL NOZZLES

Remove the five (1 PZ) or six (1 HZ and 1HD-T) check valves and oil nozzles.

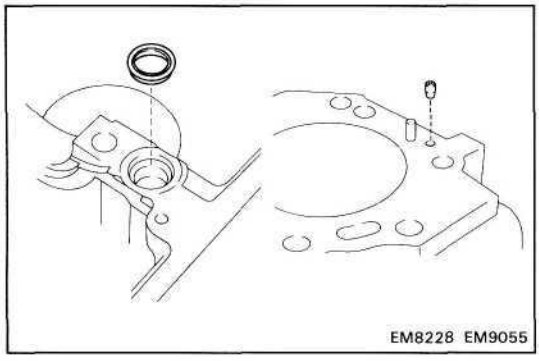
EM8228 EM9055

9. REMOVE CYLINDER BLOCK OIL HOLE GASKET

10. REMOVE CYLINDER BLOCK ORIFICE

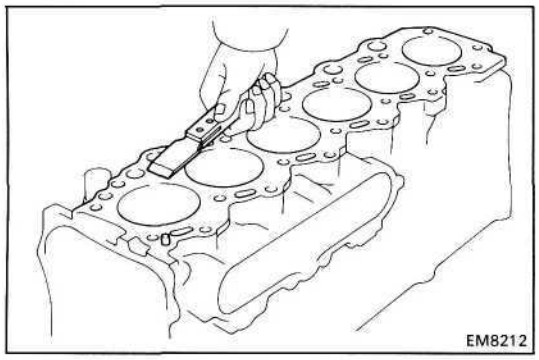

INSPECTION OF CYLINDER BLOCK

1. REMOVE GASKET MATERIAL

Using a gasket scraper, remove all the gasket material from the cylinder block surface.

2. CLEAN CYLINDER BLOCK

Using a soft brush and solvent, clean the cylinder block.

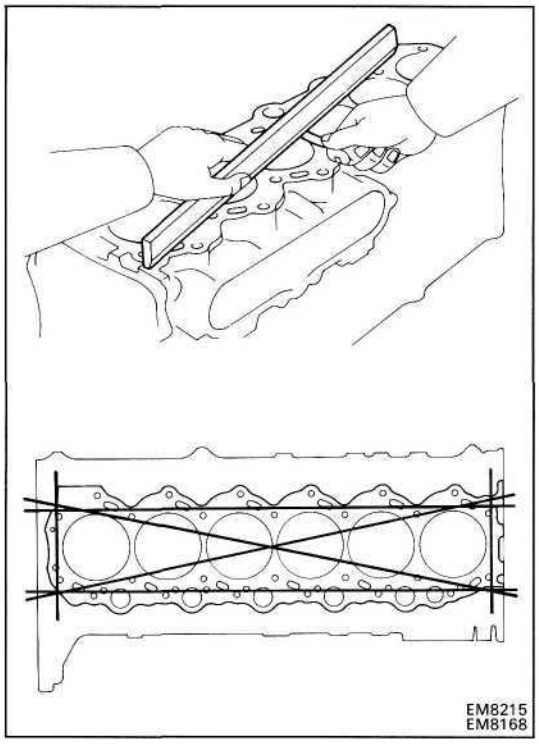

3. INSPECT TOP OF CYLINDER BLOCK FOR FLATNESS

Using a precision straight edge and thickness gauge, measure the surfaces contacting the cylinder head gasket for warpage.

Maximum warpage: 0.20 mm (0.0079 in.)

If warpage is greater than maximum, replace the cylinder block.

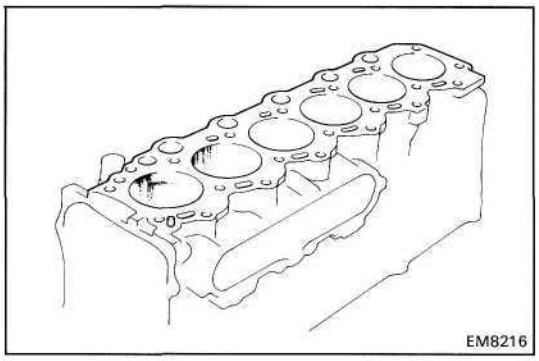

4. INSPECT CYLINDER FOR VERTICAL SCRATCHES

Visually check the cylinder for vertical scratches.

If deep scratches are present, rebore all five (1PZ) or six (1HZ and 1HD-T) cylinders. If necessary, replace the cylinder block.

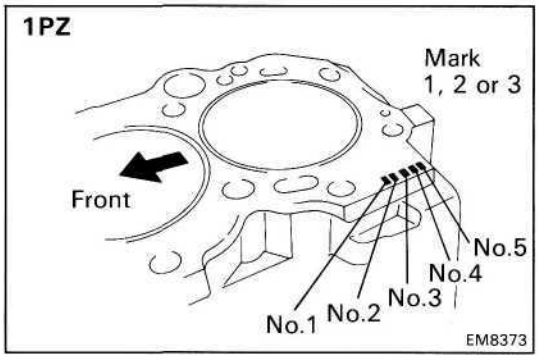

5. INSPECT CYLINDER BORE DIAMETER

HINT: There are three sizes of the standard cylinder bore diameter, marked "1", "2" and "3" accordingly. The mark is stamped on the upper left rear of the cylinder block.

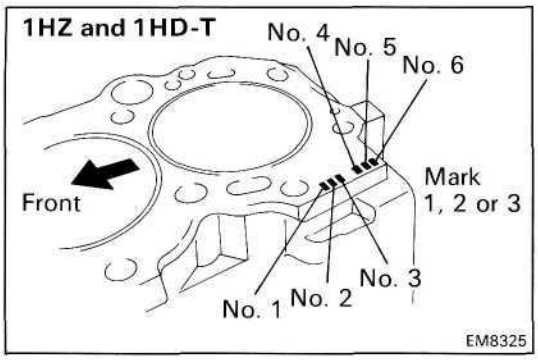

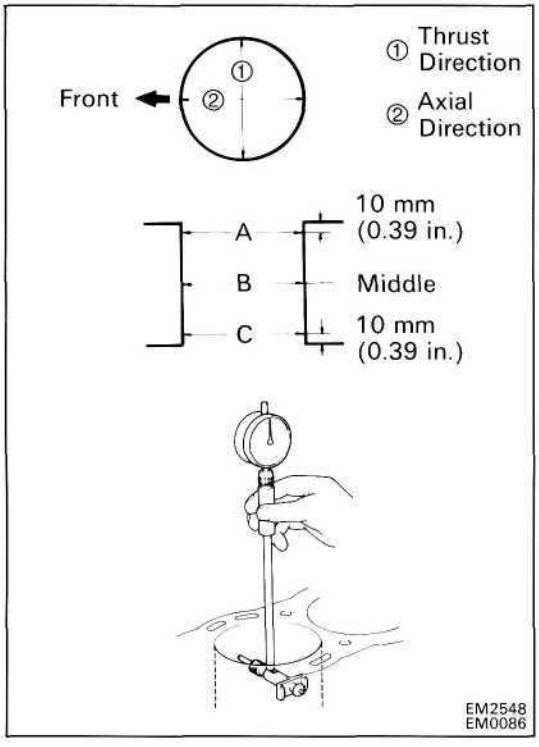

Using a cylinder gauge, measure the cylinder bore diameter at positions A, B and C in the thrust axial directions.

Standard diameter:

STD Mark "1"	**94.000-94.010 mm (3.7008-3.7012 in.)**
Mark "2"	**94.010-94.020 mm (3.7012-3.7016 in.)**
Mark "3"	**94.020 - 94.030 mm (3.7016-3.7020 in.)**

Maximum diameter:

STD	**94.23 mm (3.7098 in.)**
O/S 0.50	**94.73 mm (3.7295 in.)**

If the diameter is greater than maximum, rebore all five (1 PZ) or six (1 HZ and 1 HD-T) cylinders.
If necessary, replace the cylinder block.

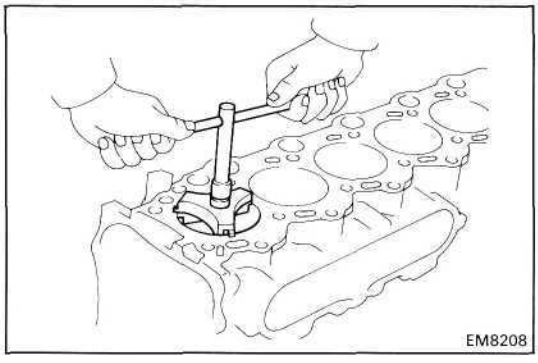

6. REMOVE CYLINDER RIDGE

If the wear is less than 0.2 mm (0.008 in.), use a ridge reamer to machine the piston ring ridge at the top of the cylinder.

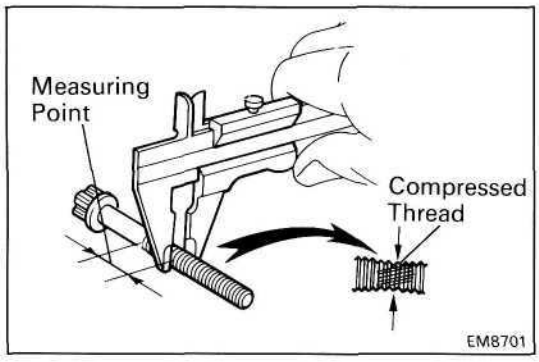

7. INSPECT MAIN BEARING CAP BOLTS

Using vernier calipers, measure the minimum diameter of the compressed thread at the measuring point.

Standard diameter: 11.800-12.000 mm (0.4646-0.4724 in.)

Minimum diameter: 11.50 mm (0.4528 in.)

If the diameter is less than minimum, replace the bolt.

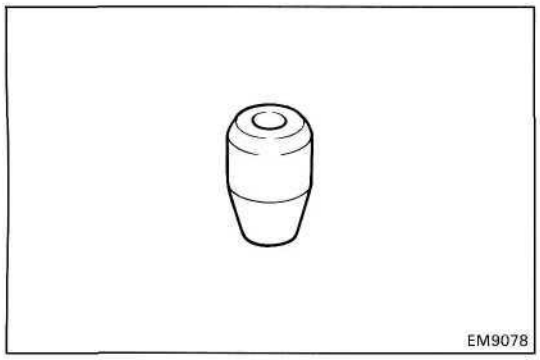

8. INSPECT CYLINDER BLOCK ORIFICE

Check that the oifice is not clogged.

DISASSEMBLY OF PISTON AND CONNECTING ROD ASSEMBLIES

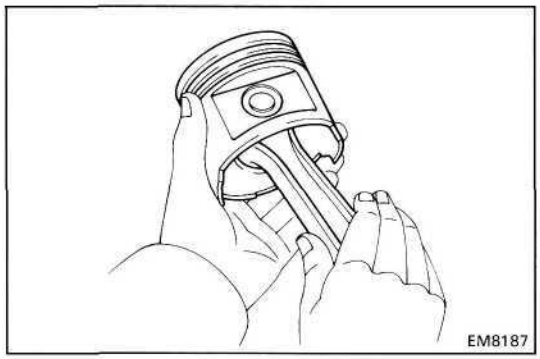

1. CHECK FIT BETWEEN PISTON AND PISTON PIN

Try to move the piston back and forth on the piston pin.

If any movement is felt, replace the piston and pin as a set.

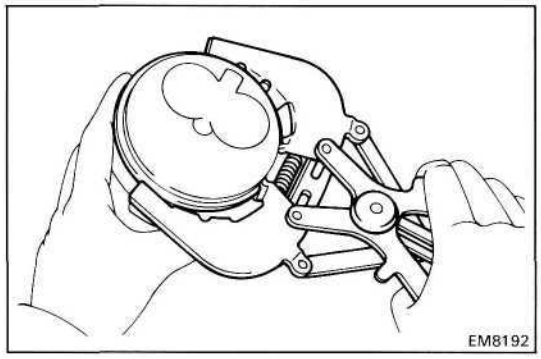

2. REMOVE PISTON RINGS

(a) Using a piston ring expander, remove the two compression rings and oil ring.

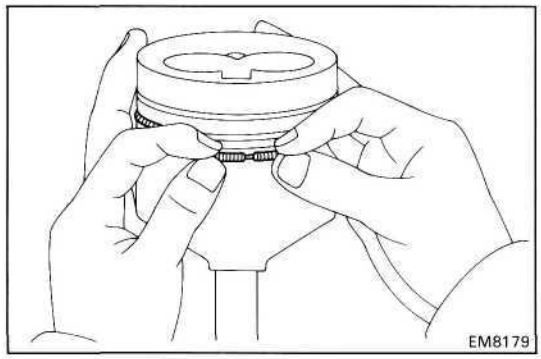

(b) Remove the coil by hand.

HINT: Arrange the rings in correct order only.

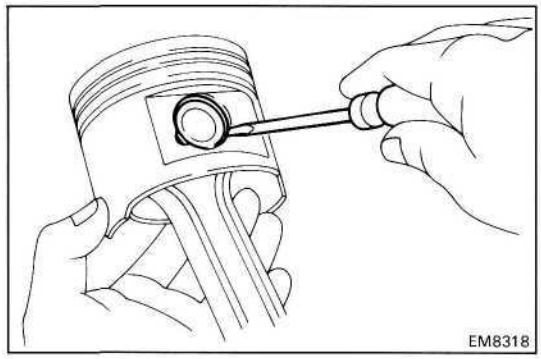

3. DISCONNECT CONNECTING ROD FROM PISTON

(a) Using a small screwdriver, remove the snap rings.

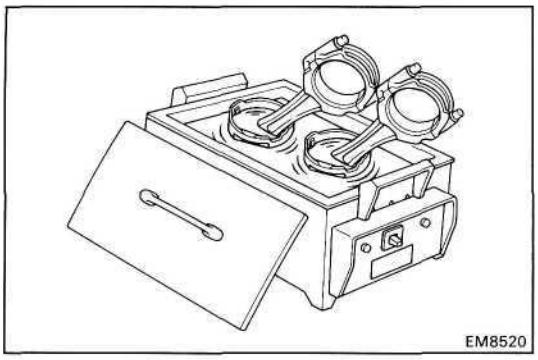

(b) Gradually heat the piston to approx. 80°C (176°F).

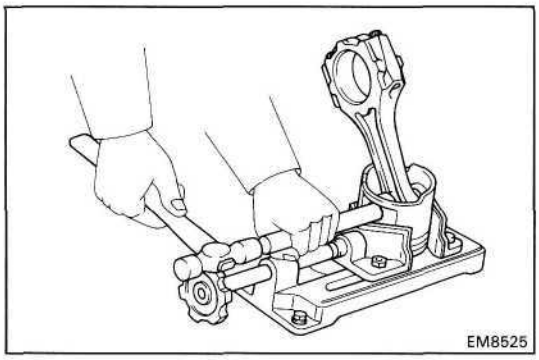

(c) Using a plastic-faced hammer and brass bar, lightly tap out the piston pin and remove the connecting rod.

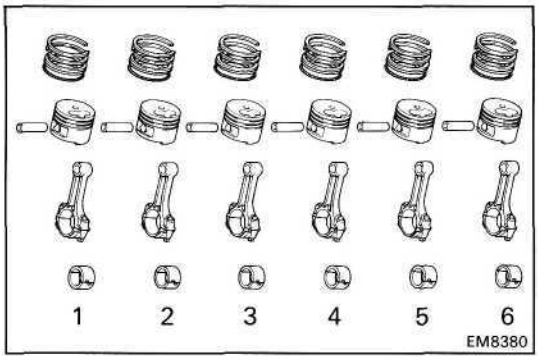

HINT:

- The piston and pin are a matched set.
- Arrange the pistons, pins, rings, connecting rods and bearings in correct order.

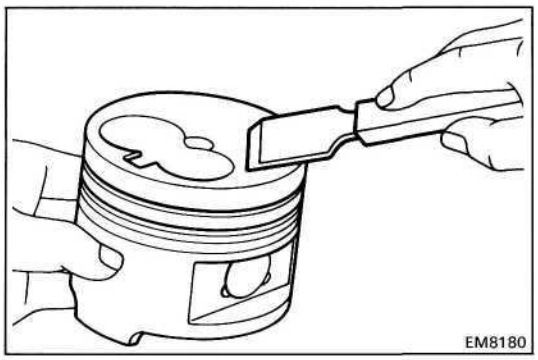

INSPECTION AND REPAIR OF PISTON AND CONNECTING ROD ASSEMBLIES

1. CLEAN PISTON

(a) Using a gasket scraper, remove the carbon from the piston top.

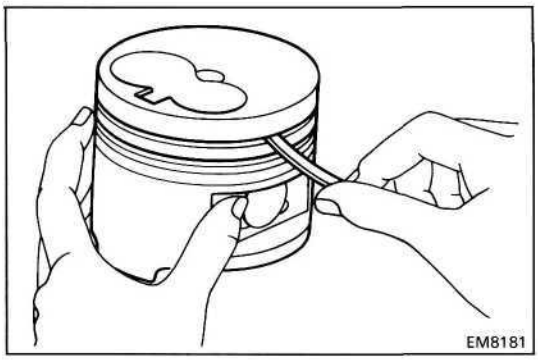

(b) Using a groove cleaning or broken ring, clean the piston ring grooves.

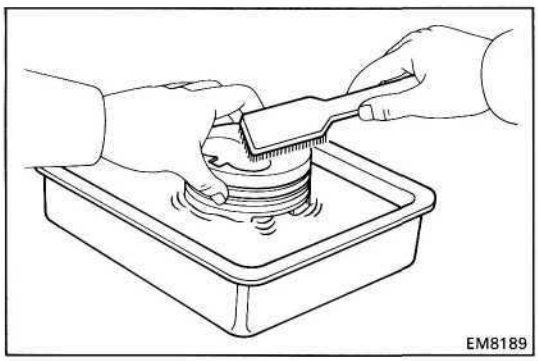

(c) Using solvent and a brush, thoroughly clean the piston.

NOTICE: Do not use a wire brush.

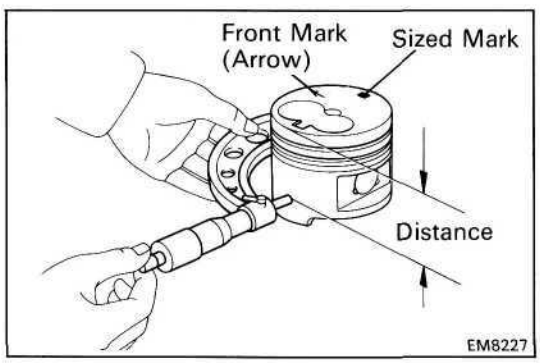

2. INSPECT PISTON DIAMETER AND OIL CLEARANCE

HINT: There are three sizes of the standard piston diameter, marked "1", "2" and "3" accordingly. The mark is stamped on the top of the piston.

(a) Using a micrometer, measure the piston diameter at right angles to the piston pin center line, at the indicated distance from the piston head.

Distance:

1PZ and 1 HZ	**58.6 mm (2.3071 in.)**
1HD-T	**65.7 mm (2.5866 in.)**

Piston diameter:

STD Mark "1"	**93.95-93.96 mm (3.6988-3.6992 in.)**
Mark "2"	**93.96 - 93.97 mm (3.6992-3.7000 in.)**
Mark "3"	**93.97-93.98 mm (3.7000-3.7000 in.)**
O/S 0.50	**94.45 - 94.48 mm (3.7185-3.7197 in.)**

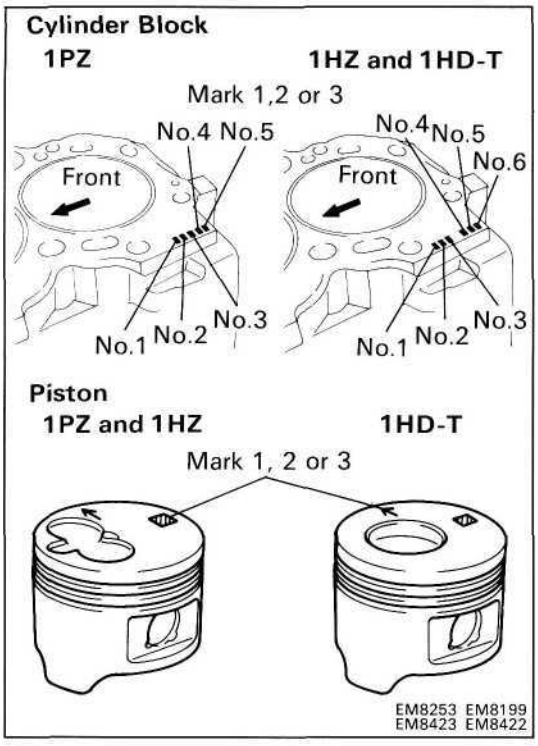

(b) Measure the cylinder bore diameter in the thrust directions. (See step 5 on page EM-93)

(c) Subtract the piston diameter measurement from the cylinder bore diameter measurement.

Standard oil clearance: 0.04-0.06 mm (0.0016-0.0024 in.)

Maximum oil clearance: 0.14 mm (0.0055 in.)

If the oil clearance is greater than maximum, replace all five (1 PZ) or six (1 HZ and 1 HD-T) pistons and rebore all five (1 PZ) or six (1 HZ and 1HD-T) cylinders. If necessary, replace the cylinder block.

HINT (Use cylinder block subassembly): When installing a standard piston, install one with the same number mark as the standard bore diameter mark on the cylinder block.

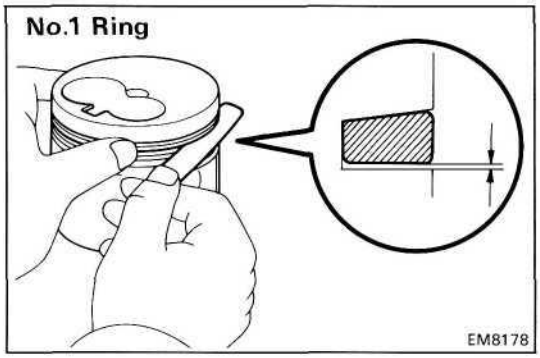

3. INSPECT CLEARANCE BETWEEN WALL OF RING GROOVE AND NEW PISTON RING
(No.1 Ring)

Install new No.1 piston ring to the piston. Using a thickness gauge, measure the clearance between the piston ring and wall of the piston ring groove.

Ring groove clearance:
No.1 0.050-0.095 mm (0.0020-0.0037 in.)

(No.2 and Oil Rings)

Using a thickness gauge, measure the clearance between new piston ring and the wall of the piston ring groove.

Ring groove clearance:
No.2 0.06-0.10 mm (0.0024-0.0039 in.)
Oil 0.03-0.07 mm (0.0012-0.0028 in.)

If the clearance is not as specified, replace the piston.

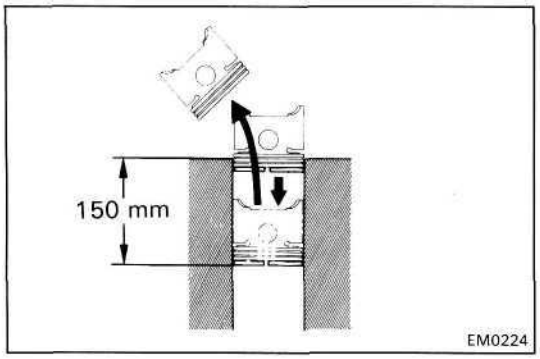

4. INSPECT PISTON RING END CAP

(a) Insert the piston ring into the cylinderbore.

(b) Using a piston, push the piston ring a little beyond the bottom of the ring travel, 1 50 mm (5.91 in.) from the top of the cylinder block.

(c) Using a thickness gauge, measure the end gap.

Standard end gap:

No.1	**0.27-0.54 mm (0.0106-0.0213 in.)**
No.2	**0.40-0.62 mm (0.0157-0.0244 in.)**
Oil	**0.20-0.52 mm (0.0079-0.0205 in.)**

Maximum end gap:

No.1	**1.34 mm (0.0591 in.)**
No.2	**1.42 mm (0.0551 in.)**
Oil	**1.32 mm (0.0520 in.)**

If the end gap is greater than maximum, replace the piston ring. If the end gap is greater than maximum, even with a new piston ring, rebore all five (1 PZ) or six (1 HZ and 1 HD-T) cylinders or replace the cylinder block.

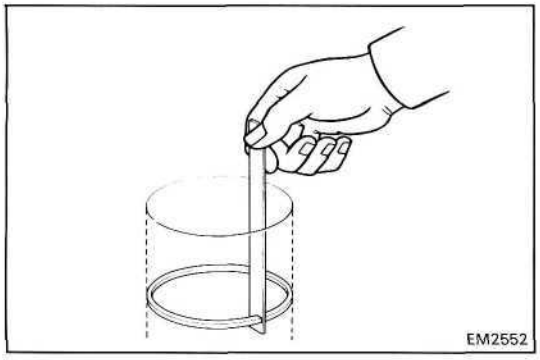
EM2552

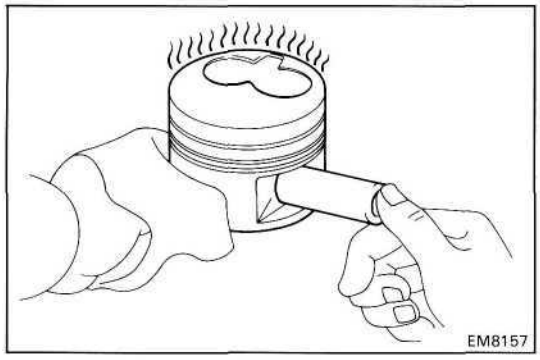
EM8157

5. INSPECT PISTON PIN FIT

At 80°C (176°F), you should be able to push the piston pin into the piston pin hole with your thumb.

6. INSPECT CONNECTING ROD

A. Inspect connecting rod alignment

Using a rod aligner, check the connecting rod alignment.

- Check for bending.

Maximum bending:

0.03 mm (0.0012 in.) per 100 mm (3.94 in.)

If bent is greater than maximum, replace the connecting rod assembly.

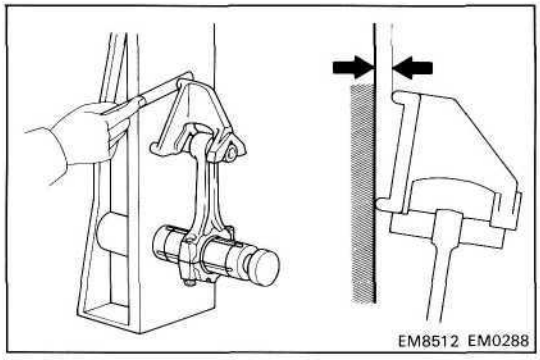
EM8512 EM0288

- Check for twist.

Maximum twist:

0.15 mm (0.0059 in.) per 100 mm (3.94 in.)

If twist is greater than maximum, replace the connecting rod assembly.

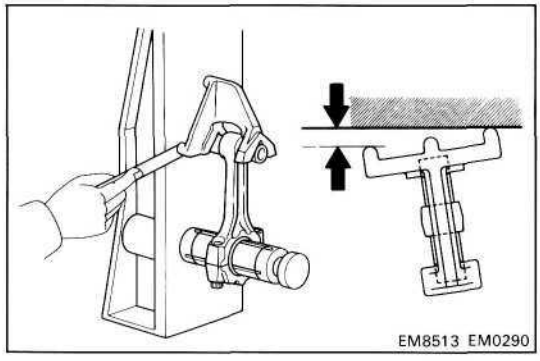
EM8513 EM0290

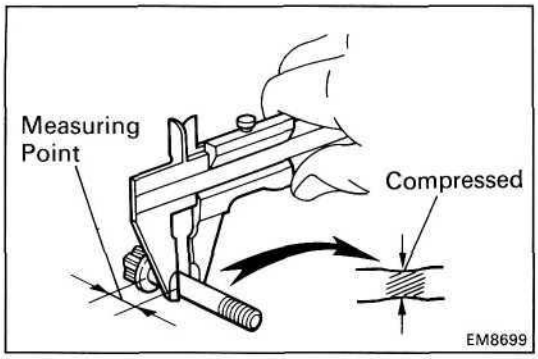

B. Inspect connecting rod bolts

Using vernier calipers, measure the minimum diameter of the compressed bolt at the measuring point.

Standard diameter: 8.300-8.400 mm (0.3268-0.3307 in.)

Minimum diameter: 7.95 mm (0.3130 in.)

If the diameter is less than minimum, replace the connecting rod bolt.

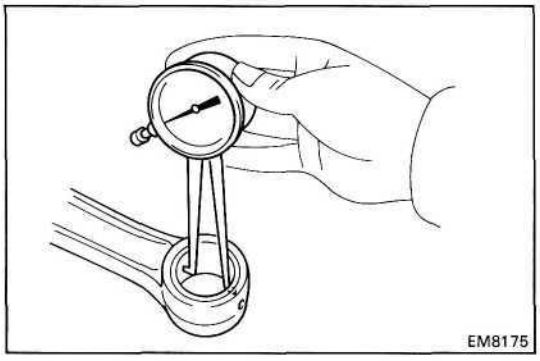

C. Inspect piston pin oil clearance

(a) Using a caliper gauge, measure the inside diameter of the connecting rod bushing.

Bushing inside diameter:

1PZ and 1HZ

29.008-29.020 mm (1.1420-1.1425 in.)

1HD-T

33.008-33.020 mm (1.2995-1.3000 in.)

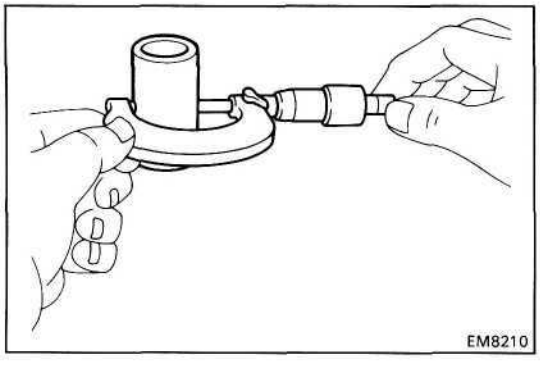

(b) Using a micrometer, measure the piston pin diameter.

Piston pin diameter:

1PZ and 1HZ

29.000-29.012 mm (1.1417-1.1422 in.)

1HD-T

33.000-33.012 mm (1.2992-1.2997 in.)

(c) Subtract the piston pin diameter measurement from the bushing inside diameter measurement.

Standard oil clearance: 0.004-0.012 mm (0.0002-0.0005 in.)

Maximum oil clearance: 0.03 mm (0.0012 in.)

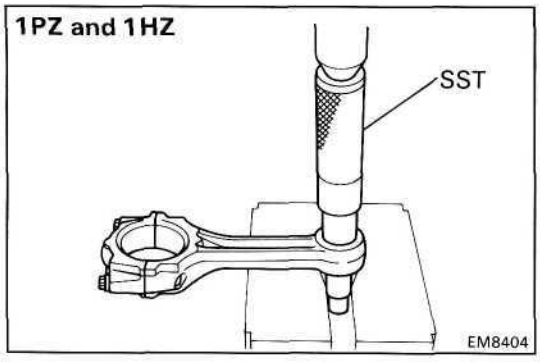

7. IF NECESSARY, REPLACE CONNECTING ROD BUSHINGS

A. Remove connecting rod bushings

Using SST and a press, press out the bushing.

SST 1PZ and 1HZ	09222-66010
1HD-T	09222-17010(09222-05020, 09222-05040)

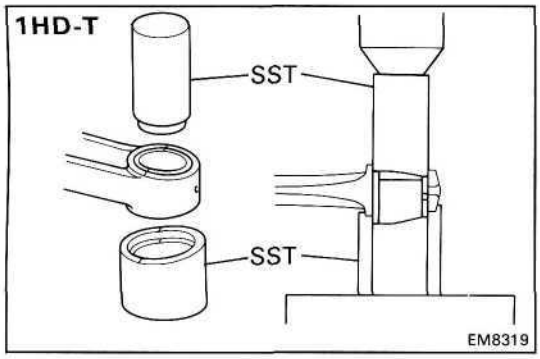

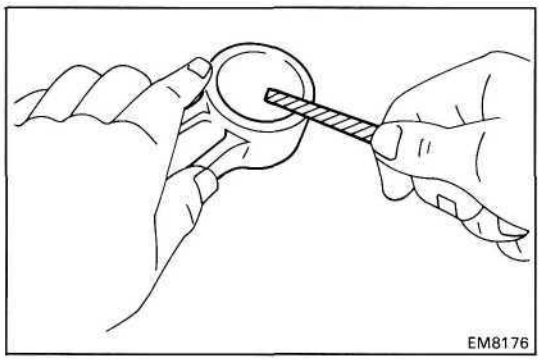

B. Install new connecting rod bushings

(a) Using a round file, lightly file off any roughness from the small end of the connecting rod.

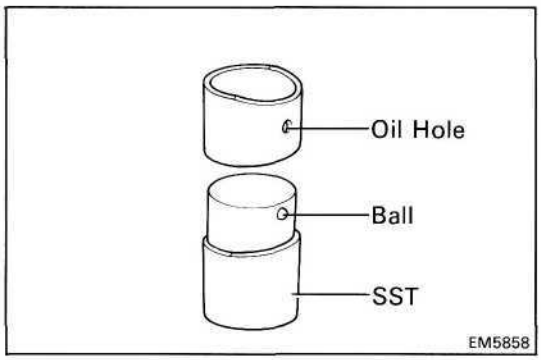

(b) (1HD-T)
Attach the bushing to SST with the ball of SST inside the oil hole of the bushing.

SST 09222-17010 (09222-05030)

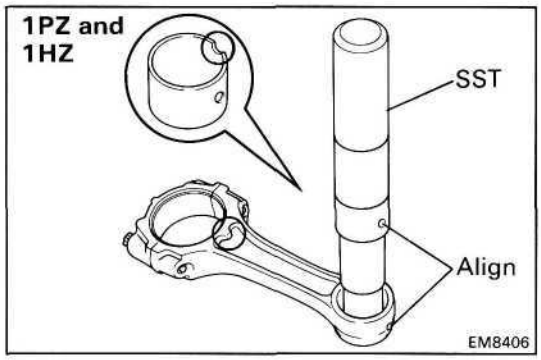

(c) Align the oil holes of the bushing and connecting rod.

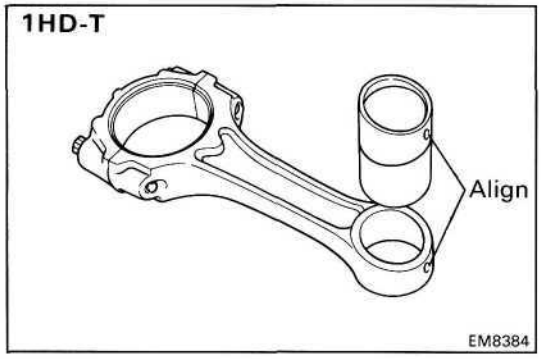

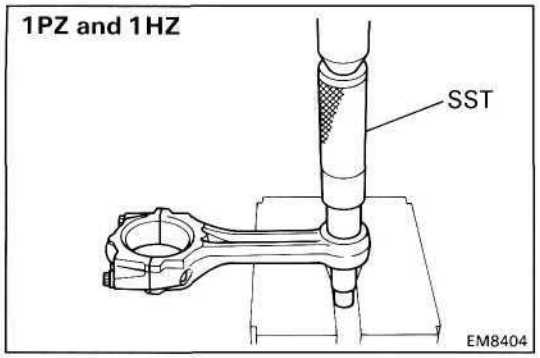

(d) Using SST and a press, press in the bushing.

SST 1PZ and 1HZ 09222-66010
1HD-T 09222-17010(09222-05020, 09222-05030, 09222-05040)

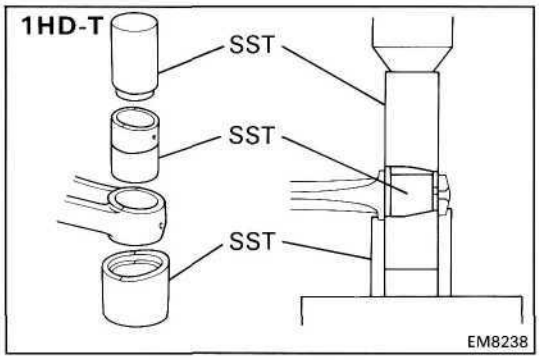

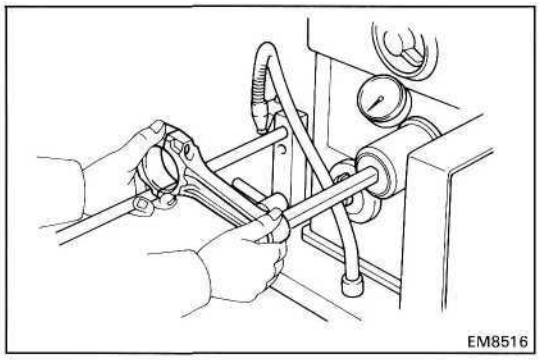

C. Hone connecting rod bushing and check piston pin fit

(a) Using a pin hole grinder, hone the bushing to obtain the standard specified clearance (see page EM-100) between the bushing and piston pin.

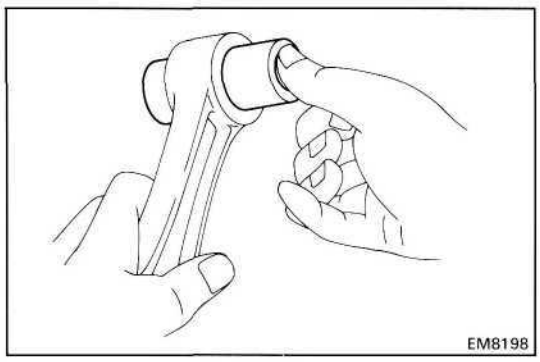

(b) Check the piston pin fit at normal room temperature. Coat the piston pin with engine oil, and push it into the connecting rod with your thumb.

BORING OF CYLINDERS

HINT:

- Bore all five (1 PZ) or six (1 HZ and 1 HD-T) cylinders for the oversized piston outside diameter.
- Replace the piston rings with ones to match the oversized pistons.

1. KEEP OVERSIZED PISTONS

Oversized piston diameter:

O/S0.50 94.45-94.48 mm (3.7185-3.7197 in.)

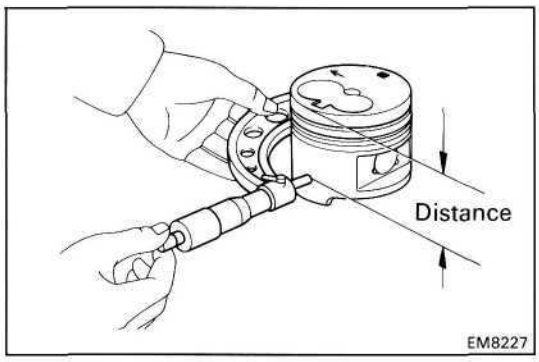

2. CALCULATE AMOUNT TO BORE CYLINDER

(a) Using a micrometer, measure the piston diameter at right angles to the piston pin center line, at the indicated distance from the piston head.

Distance:

1 PZ and 1 HZ 58.6 mm (2.3071 in.)
1 HD-T 65.7 mm (2.5866 in.)

(b) Calculate the amount each cylinder is to be rebored as follows:

Size to be rebored = P + C- H
P = Piston diameter
C = Piston oil clearance
0.04-0.06 mm (0.0016-0.0024 in.)
H = Allowance for honing
0.02 mm (0.0008 in.) or less

3. BORE AND HONE CYLINDERS TO CALCULATED DIMENSIONS

Maximum honing: 0.02 mm (0.0008 in.)

NOTICE: Excess honing will destroy the finished roundness.

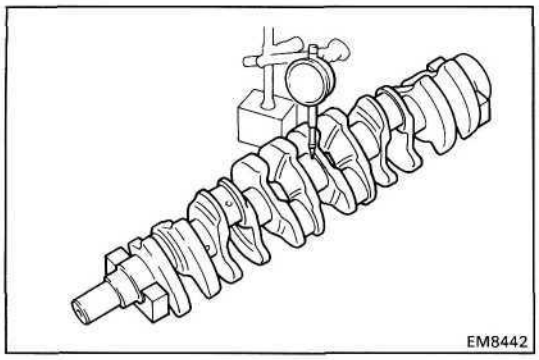

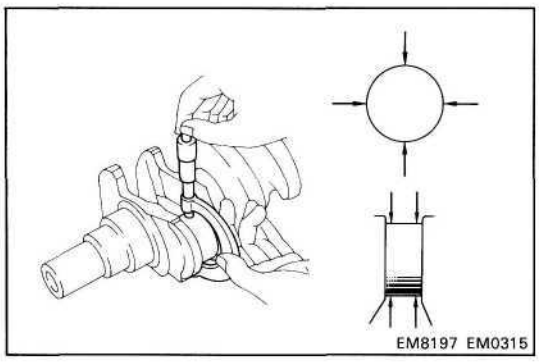

INSPECTION AND REPAIR OF CRANKSHAFT

1. INSPECT CRANKSHAFT FOR RUNOUT

(a) Place the crankshaft on V-blocks.

(b) Using a dial indicator, measure the circle runout at the center journal.

Maximum circle runout: 0.06 mm (0.0024 in.)

If the circle runout is greater than maximum, replace the crankshaft.

2. INSPECT MAIN JOURNALS AND CRANK PINS

(a) Using a micrometer, measure the diameter of each main journal and crank pin.

Main journal diameter:

STD	**66.982-67.000 mm (2.6371 -2.6378 in.)**
U/S 0.25	**66.745 - 66.755 mm (2.6278-2.6281 in.)**
U/S 0.50	**66.495 - 66.505 mm (2.6179-2.6183 in.)**

Crank pin diameter:

STD	**58.982-59.000 mm (2.3221-2.3228 in.)**
U/S 0.25	**58.745-58.755 mm (2.3128-2.3132 in.)**
U/S 0.50	**58.495-58.505 mm (2.3029-2.3033 in.)**

If the diameter is not as specified, check the oil clearance (See pages EM-86 to 92).

(b) Check each main journal and crank pin for taper and out-of-round as shown.

Maximum taper and out-of-round: 0.02 mm (0.0008 in.)

If the taper or out-of-round is greater than maximum, grind or replace the crankshaft.

3. IF NECESSARY, GRIND AND HONE MAIN JOURNALS AND/OR CRANK PINS

Grind and hone the main journals and/or crank pins to the finished undersized diameter (See procedure step 2).

Install new main journal and/or crank pin undersized bearings.

REPLACEMENT OF CRANKSHAFT OIL SEAL

HINT: There are two methods (A and B) to replace the oil seal as follows:

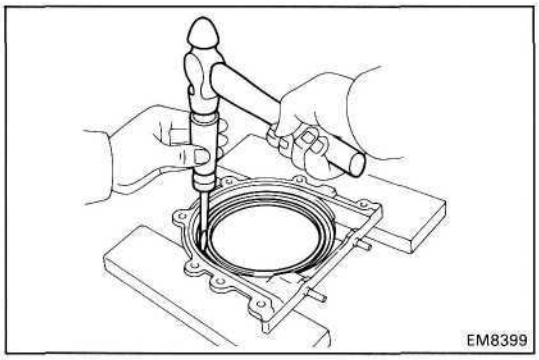

REPLACE CRANKSHAFT REAR OIL SEAL

A. If rear oil seal retainer is removed from cylinder block:

(a) Using a screwdriver and hammer, tap out the oil seal.

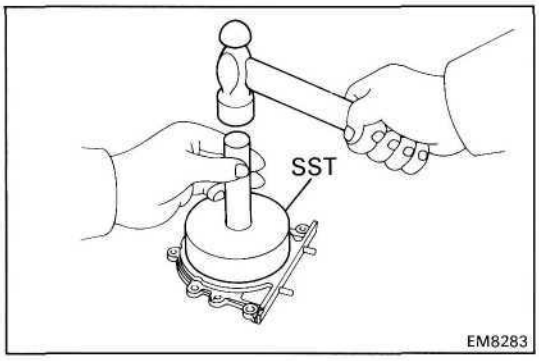

(b) Using SST and a hammer, tap in a new oil seal until its surface is flush with the rear oil seal retainer edge.

SST 09223-56010

(c) Apply MP grease to the oil seal lip.

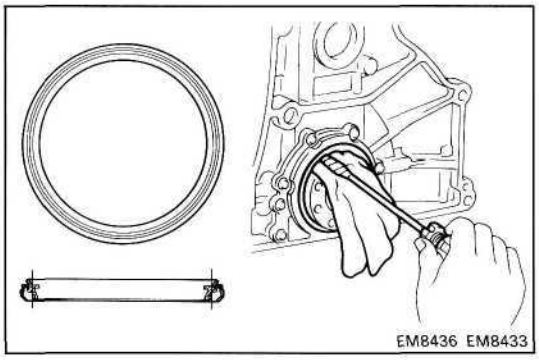

B. If rear oil seal retainer is installed to cylinder block:

(a) Using a knife, cut off the oil seal lip.

(b) Using a screwdriver, pry out the oil seal.

NOTICE: Be careful not to damage the crankshaft. Tape the screwdriver tip.

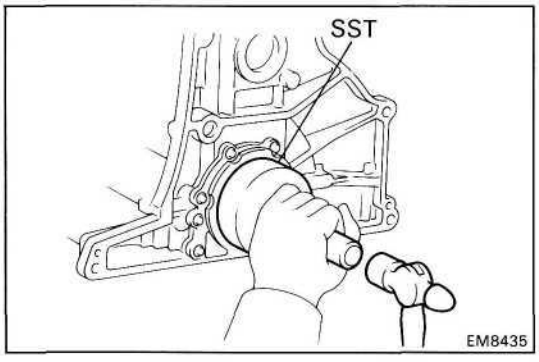

(c) Apply MP grease to a new oil seal lip.

(d) Using SST and a hammer, tap in the oil seal until its surface is flush with the rear oil seal retainer edge.

SST 09223-56010

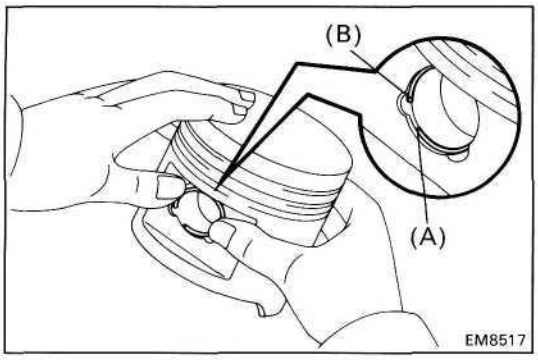

ASSEMBLY OF PISTON AND CONNECTING ROD ASSEMBLIES

1. ASSEMBLE PISTON AND CONNECTING ROD

(a) Install a new snap ring on one side of the piston pin hole.

- Position the snap ring so that end (B) of the snap ring is aligned with the hollow, then push the snap ring into the piston groove starting from end (A).

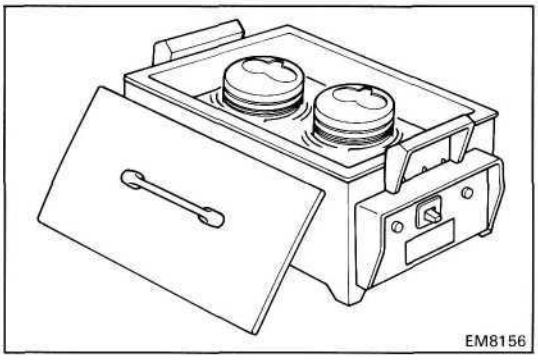

(b) Gradually heat the piston to about 80°C (176°F).

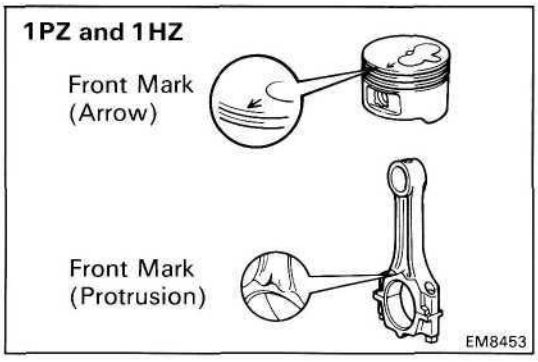

(c) Apply a light coat of engine oil to the piston pin.

(d) Align the front marks of the piston and connecting rod, and push in the piston pin with your thumb.

(e) Install a new snap ring on the other side of the piston pin hole using the same method as in (a) above.

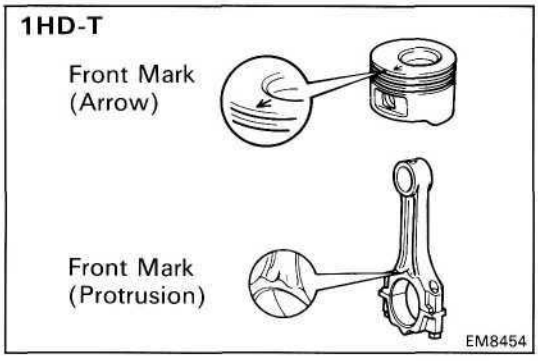

2. INSTALL PISTON RINGS

(a) Install the coil by hand.

(b) Using a piston ring expander, install the oil ring.

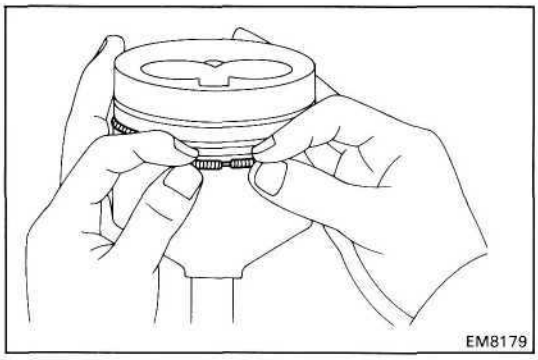

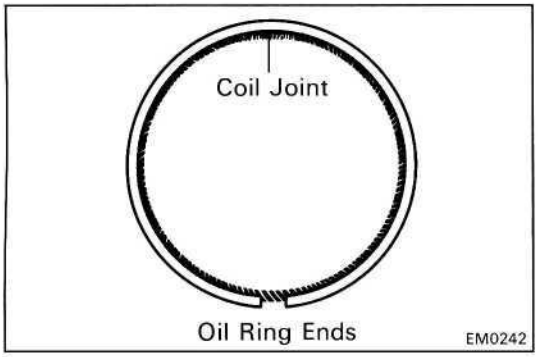

HINT: Face the end gap of the oil ring in the opposite direction of coil joint.

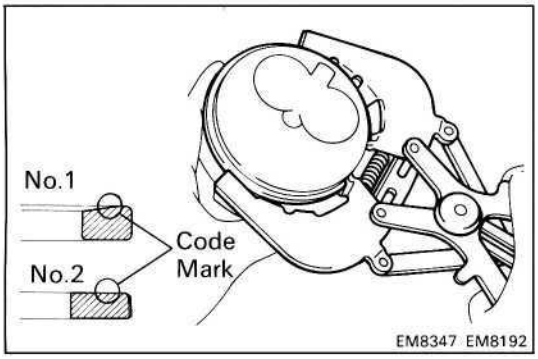

(c) Using a piston ring expander, install the two compression rings with the code mark facing upward.

Code mark: No.1 1T
No.2 2T

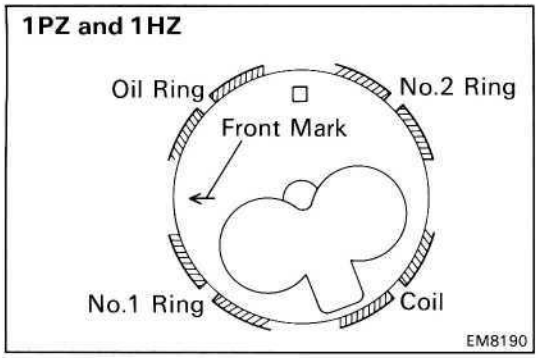

(d) Position the piston rings so that the ring ends are as shown.

NOTICE: Do not align the ring ends.

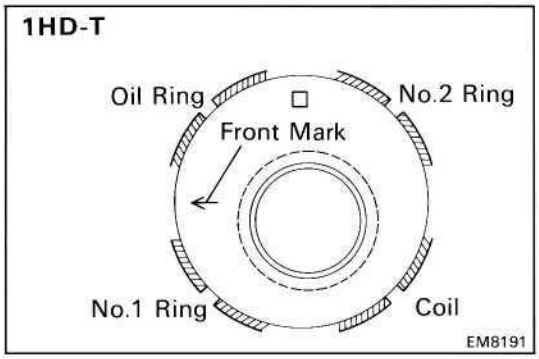

3. INSTALL BEARINGS

(a) Align the bearing claw with the claw groove of the connecting rod or connecting cap.

(b) Install the bearings in the connecting rod and connecting rod cap.

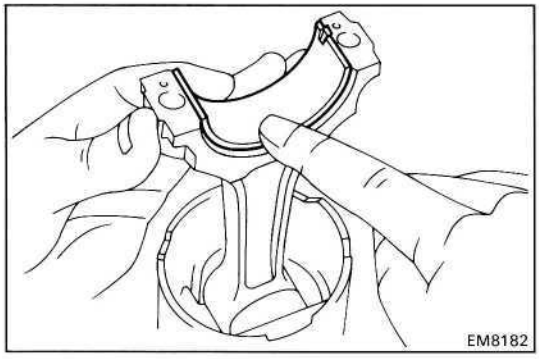

ASSEMBLY OF CYLINDER BLOCK

(See page **EM**-84)

HINT:

- Thoroughly clean all parts to be assembled.
- Before installing the parts, apply new engine oil to all sliding and rotating surfaces.
- Replace all gaskets, O-rings and oil seals with new parts.

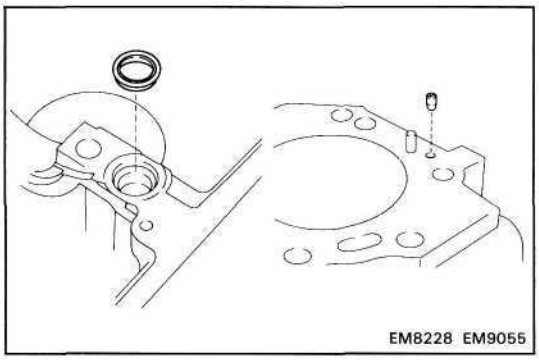

1. INSTALL NEW CYLINDER BLOCK OIL HOLE GASKET

2. INSTALL CYLINDER BLOCK ORIFICE

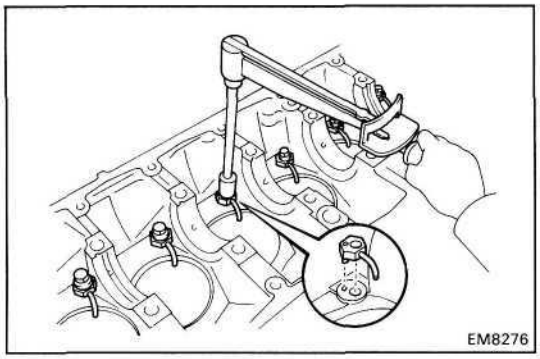

3. INSTALL OIL NOZZLES AND CHECK VALVES

(a) Align the pin of the oil nozzle with the pin hole of the cylinder block.

(b) Install the oil nozzle with the check valve. Install the five (1PZ) or six (1 HZ and 1HD-T) oil nozzles and check valves.

Torque: 275 kg-cm (20 ft-lb, 27 N·m)

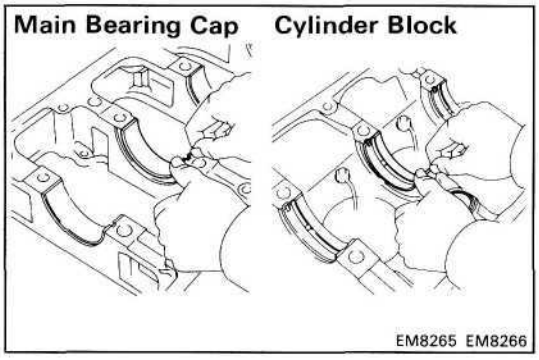

4. INSTALL MAIN BEARINGS

(a) Align the bearing claw with the claw groove of the main bearing cap or cylinder block.

(b) Install the bearings in the cylinder block and main bearing cap.

NOTICE: Install the bearing with the oil hole in the cylinder block.

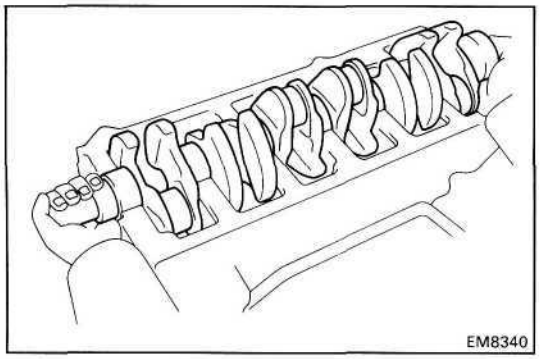

5. PLACE CRANKSHAFT ON CYLINDER BLOCK

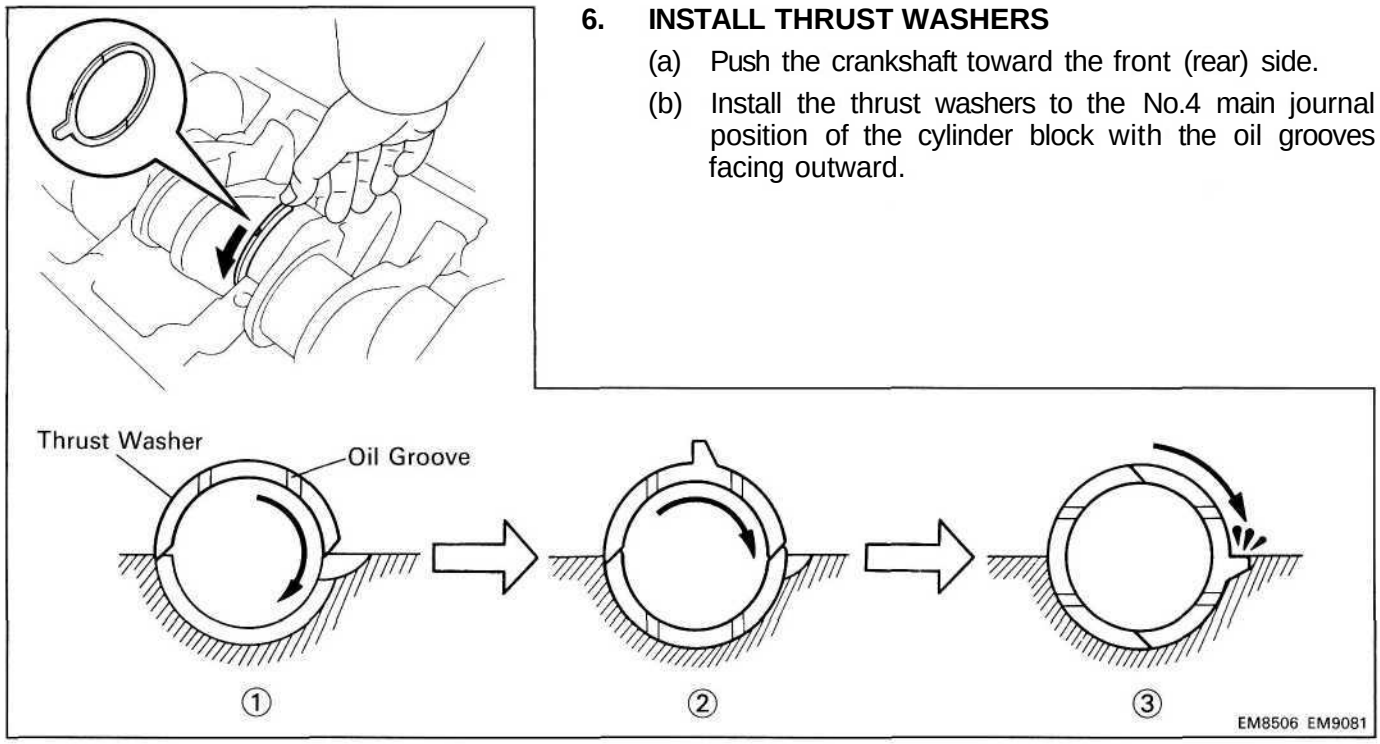

6. INSTALL THRUST WASHERS

(a) Push the crankshaft toward the front (rear) side.

(b) Install the thrust washers to the No.4 main journal position of the cylinder block with the oil grooves facing outward.

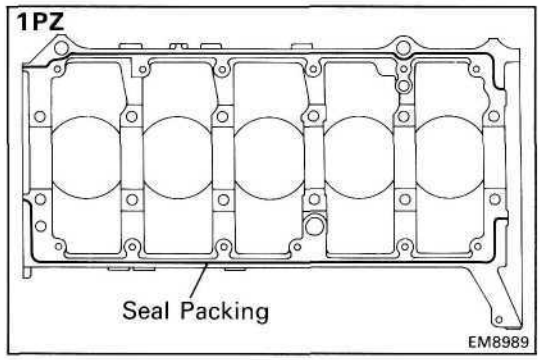

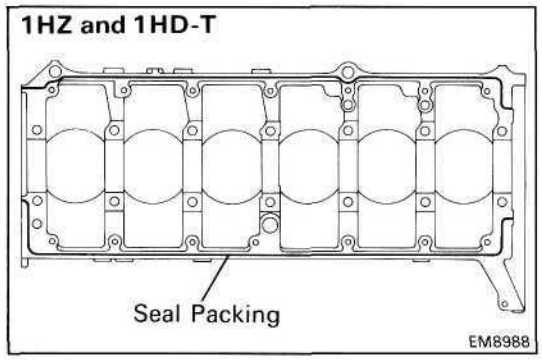

7. INSTALL MAIN BEARING CAP

A. Install main bearing cap on cylinder block

(a) Remove any old packing (FIPG) material and be careful not to drop any oil the contact surfaces of the main bearing cap and cylinder block.

- Thoroughly clean all components to remove all the loose material.
- Using a non-residue solvent, clean both sealing surfaces.

(b) Apply seal packing to the cylinder block as shown in the illustration.

Seal packing: Part No. 08826-00080 or equivalent

- Install a nozzle that has been cut to a 5 mm (0.20 in.) opening.
- Parts must be assembled within 5 minutes of application. Otherwise the material must be removed and reapplied.
- Immediately remove nozzle from the tube and reinstall cap.

B. Install main bearing cap bolts

HINT:

- The main bearing cap bolts are tightened in two progressive steps.
- If any of the main bearing bolts break or deform, replace them.

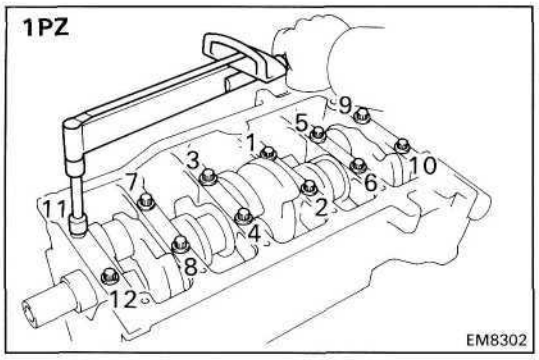

(a) Apply a light coat of engine oil on the threads and under the heads of the main bearing cap bolts.

(b) 1st, install and uniformly tighten the twelve (1 PZ) or fourteen (1 HZ and 1 HD-T) main bearing cap bolts in several passes in the sequence shown.

Torque: 1,050 kg-cm (76 ft-lb, 103 N·m)

If any one of the main bearing cap bolts does not meet the torque specification, replace the main bearing cap bolt.

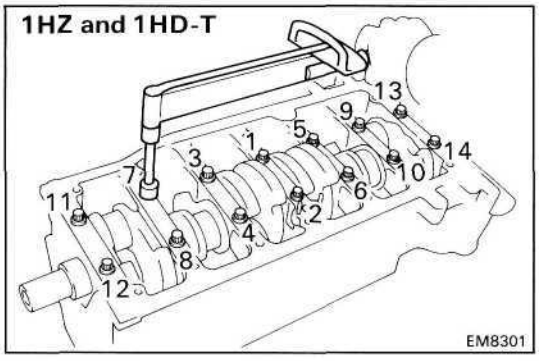

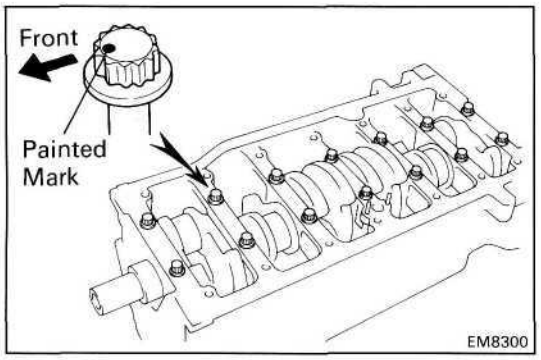

(c) Mark the front of the main bearing cap bolt head with paint.

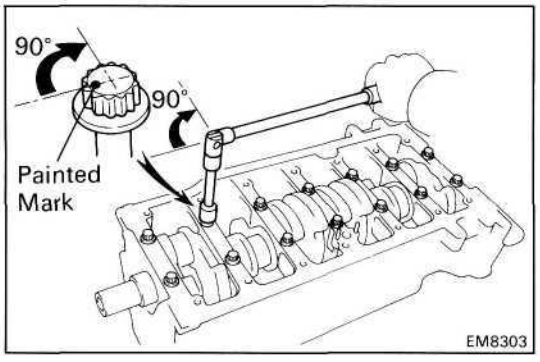

(d) 2nd, retighten the main bearing cap bolts 90° in the numerical order shown above.

(e) Check that the painted mark is now at a 90° angle to the front.

(f) Check that the crankshaft turns smoothly.

(g) Check the crankshaft thrust clearance.
(See step 5 on page EM-89)

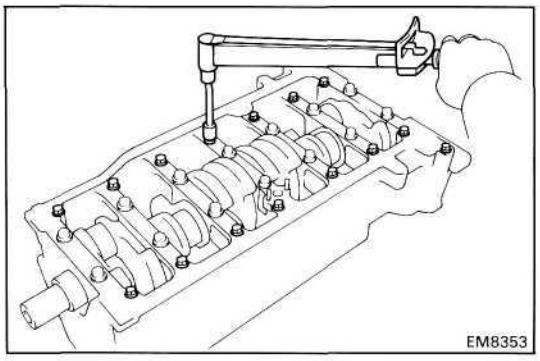

(h) Install and torque the thirteen bolts (1 PZ) or fifteen bolts (1 HZ and 1 HD-T).

Torque: 185 kg-cm (13 ft-lb, 18 N·m)

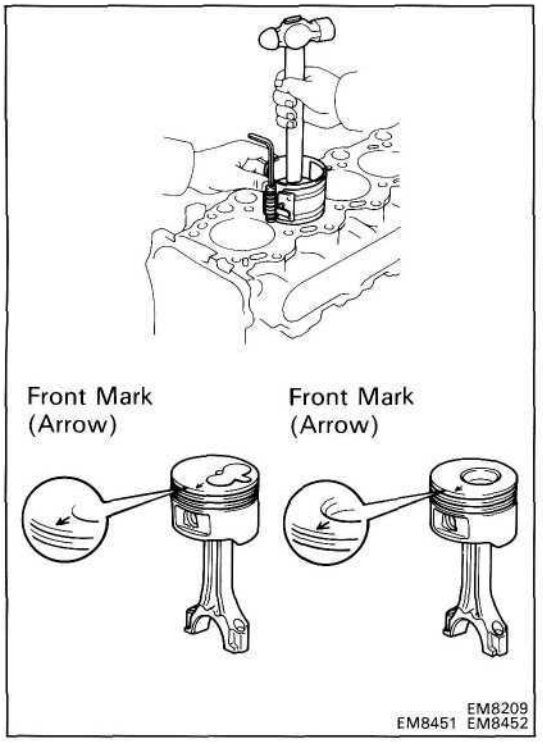

8. INSTALL PISTON AND CONNECTING ROD ASSEMBLIES

Using a piston ring compressor, push the correctly numbered piston and connecting rod assemblies into each cylinder with the front mark of the piston facing forward.

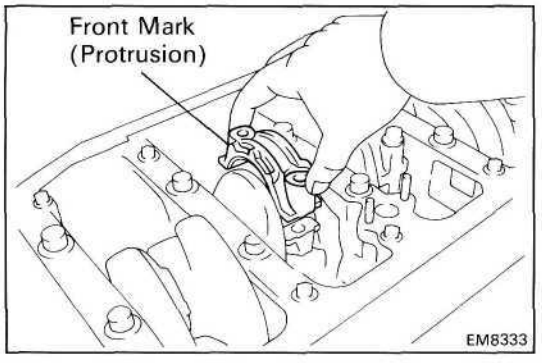

9. INSTALL CONNECTING ROD CAPS

A. Place connecting rod cap on connecting rod

(a) Match the numbered connecting rod cap with the connecting rod.

(b) Install the connecting rod cap with the front mark facing forward.

B. Install connecting rod cap bolts

HINT:

- The connecting rod cap bolts are tightened in two progressive steps.
- If any of the connecting rod bolts break or deform, replace them.

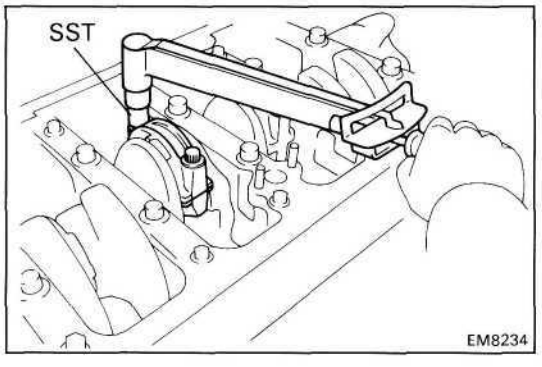

(a) Apply a light coat of engine oil on the threads and under the heads of the connecting rod cap bolts.

(b) 1 st, using SST, install and alternately tighten the bolts of the connecting rod cap in several passes.

SST 09011-381 21

Torque: 375 kg-cm (27 ft-lb, 37 N·m)

If any one of the connecting rod cap bolts does not meet the torque specification, replace the cap bolt.

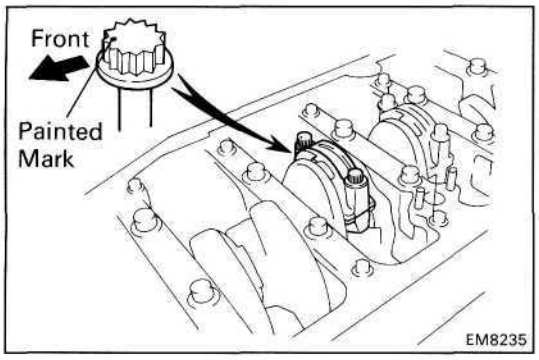

(c) Mark the front of the connecting rod cap bolt with paint.

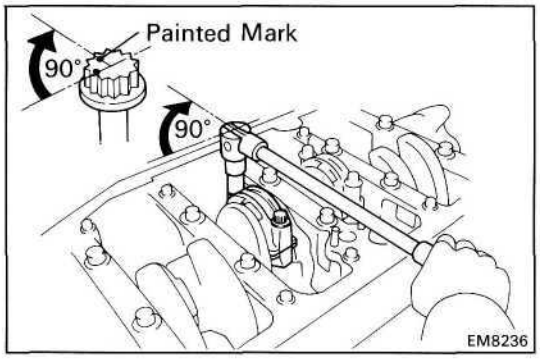

(d) 2nd, retighten the connecting rod cap bolts by an additional 90°.

(e) Check that the painted mark is now at a 90° angle to the front.

(f) Check that the crankshaft turns smoothly.

(g) Check the connecting rod thrust clearance.
(See step 2 on page EM-86)

10. INSTALL REAR OIL SEAL RETAINER

(a) Remove any old packing (FIPG) material and be careful not to drop any oil on the contact surfaces of the rear oil seal retainer and cylinder block.

- Using a razor blade and gasket scraper, remove all the old packing (FIPG) material from the gasket surfaces and sealing groove.
- Thoroughly clean all components to remove all the loose material.
- Using a non-residue solvent, clean both sealing surfaces.

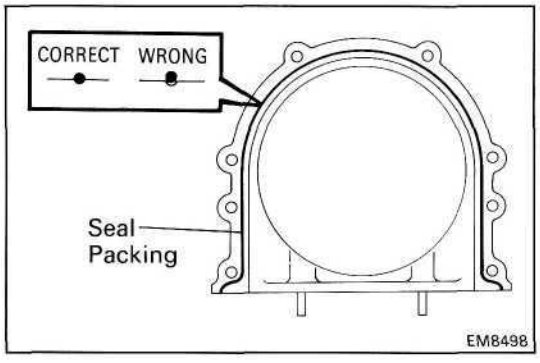

(b) Apply seal packing to the rear oil seal retainer as shown in the illustration.

Seal packing: Part No.08826-00080 or equivalent

- Install a nozzle that has been cut to a 2 - 3 mm (0.08-0.12 in.) opening.
- Parts must be assembled within 5 minutes of application. Otherwise the material must be removed and reapplied.
- Immediately remove nozzle from the tube and reinstall cap.

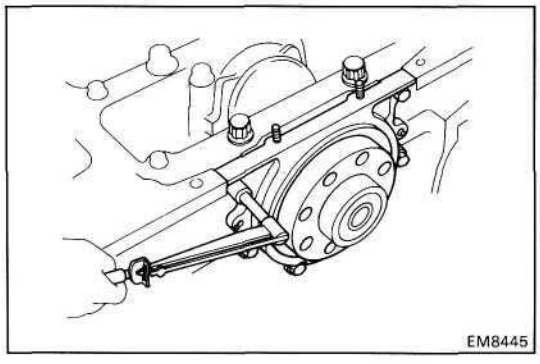

(c) Install the retainer with the six bolts.

Torque: 65 kg-cm (56 in.-lb, 6.4 N-m)

POST ASSEMBLY

1. **INSTALL ENGINE MOUNTING**
2. **INSTALL THERMOSTAT AND WATER INLET (See page CO-11)**
3. **INSTALL OIL COOLER (See page LU-18)**
4. **INSTALLTIMING GEAR CASE (OIL PUMP) AND OIL PAN (See page LU-12)**
5. **INSTALL INJECTION PUMP (See page FU-93)**
6. **INSTALL TIMING GEARS (See page EM-50)**
7. **INSTALL ALTERNATOR**
8. **INSTALL WATER PUMP (See page CO-8)**
9. **INSTALL CYLINDER HEAD (See page EM-75)**
10. **INSTALL PULLEYS AND TIMING BELT (See page EM-38)**
11. **REMOVE ENGINE STAND**
12. **INSTALL REAR END PLATE**

    Install the end plate with the bolt.

    Torque: 185 kg-cm (13 ft-lb, 18 N·m)

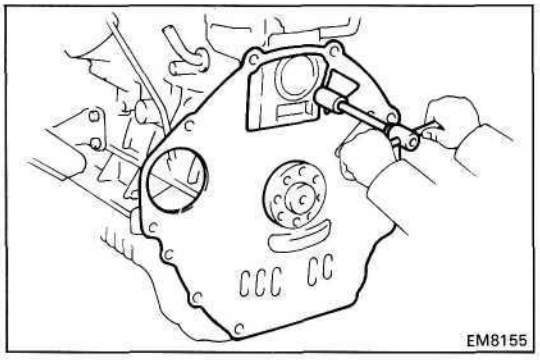

13. **(M/T)**
    INSTALL FLYWHEEL
    (a) Install the flywheel on the crankshaft.
    (b) Install and uniformly tighten the eight mount bolts in several passes, in the sequence shown.

    Torque: 1,300 kg-cm (94 ft-lb, 127 N-m)

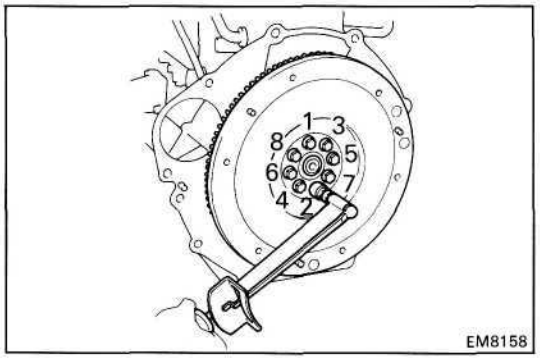

14. **(A/T)**
    INSTALL FLYWHEEL, DRIVE PLATE AND SPACER (See procedure step 13)

    Torque: 1,300 kg-cm (94 ft-lb, 127 N-m)

15. **(M/T)**
    INSTALL CLUTCH DISC AND COVER

DESCRIPTION

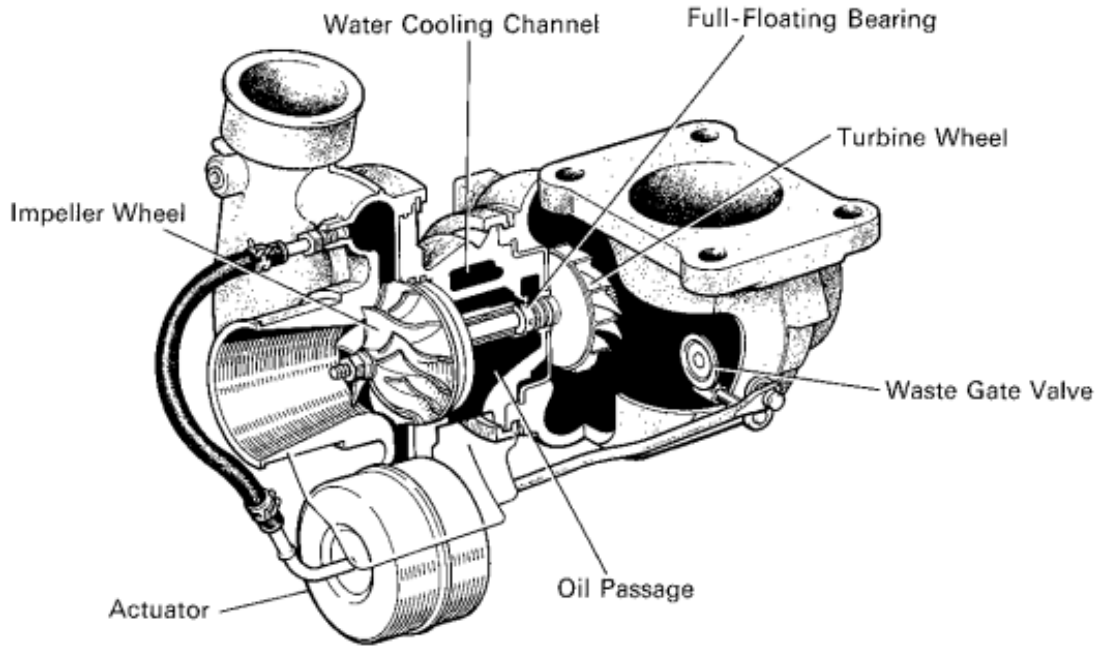

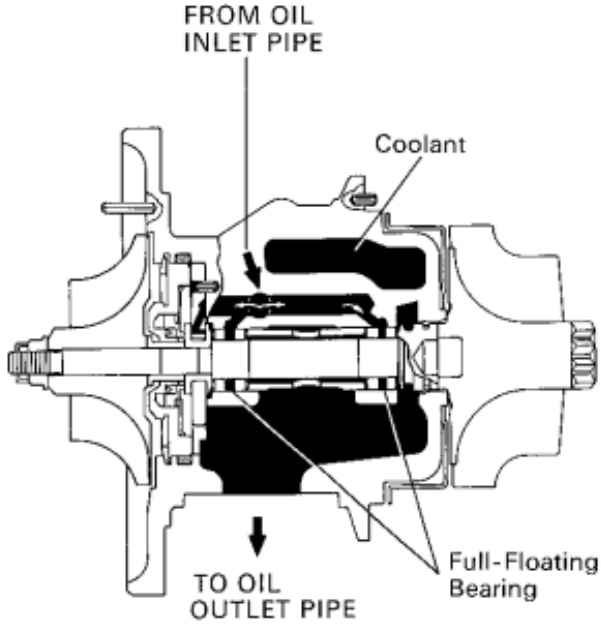

TC0101
TC0036

System which increase the amount of air sent to the engine are either turbocharger type (using exhaust gas to turn the turbine) or supercharger type (using the engine crankshaft, etc. to mechanically turn the pump, etc.). For LAND CRUISER and COASTER 1HD-T engine, the turbocharger type has been adopted.

The turbocharger is a device which increases engine output by introducing a greater amount of air to the engine. This allows a proportional increase in the fuel that can be burned and hence raises the potential power output.

In other words, by installing a special turbocharger and providing a higher air than usual, engine output can be increased by increasing the average combustion pressure without increasing the engine speed.

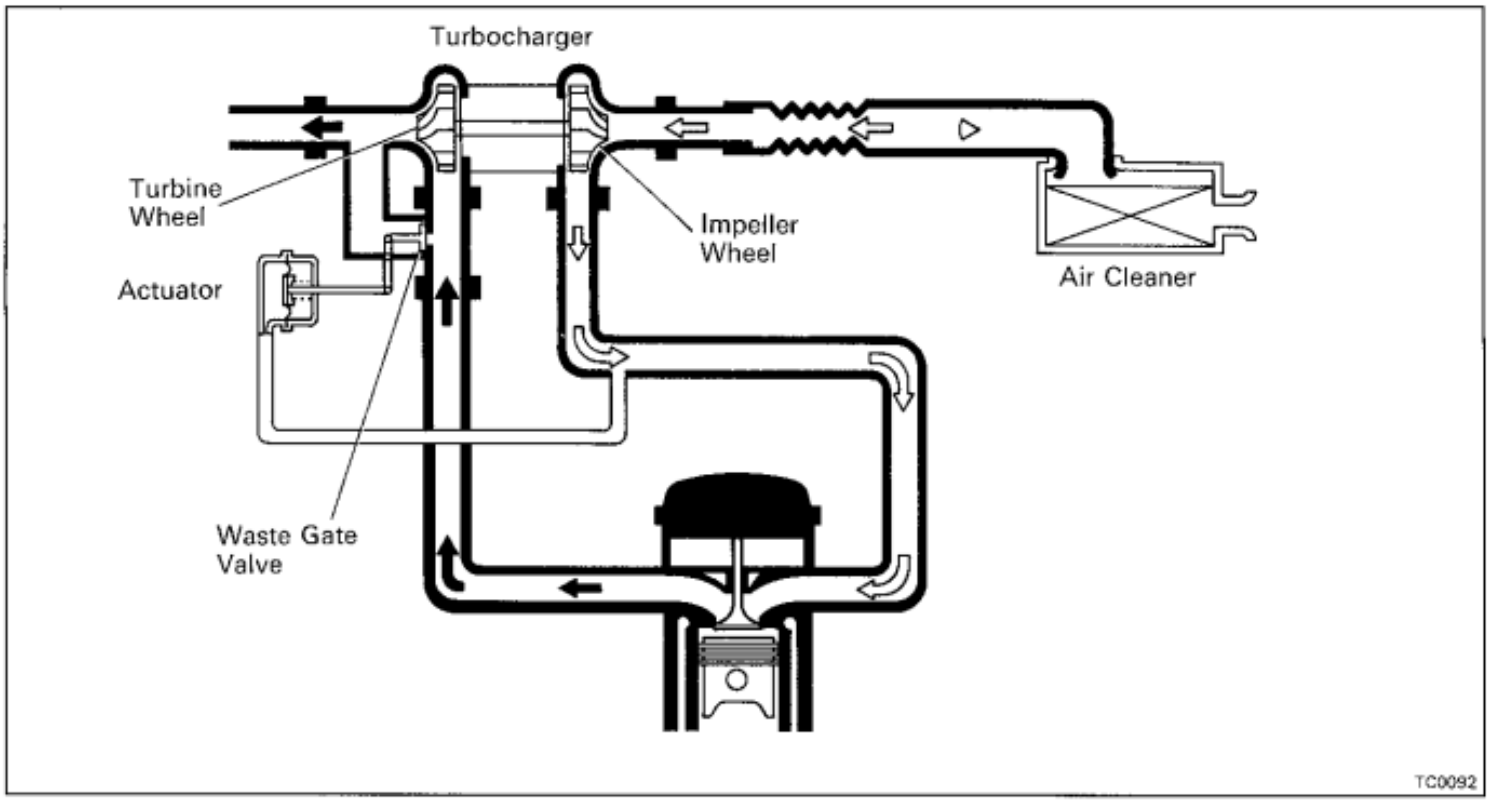

Operation of Turbocharger

Exhaust gas acts on the turbine wheel inside the turbine housing, causing it to revolve. When the turbine wheel revolves, the impeller wheel which is located on the same shaft also revolves, compressing the intake air which has passed through the air cleaner. When expelled from the compressor housing the compressed air is supplied to the cylinders. When the engine speed increases, the exhaust gas volume increases and the turbine wheel revolutions increasa (approx. 20,000 — 115,000 rpm), thus the turbocharged air pressure grows greater and engine output increases.

Waste Gate Valve

If the turbocharged air pressure exceeds the prescribed air pressure, the flow of exhaust gas by-passes the turbine, controlling turbine wheel revolutions and turbocharged air pressure. This by-pass valve which controls the quantity of exhaust gas flowing to the turbine is called the waste gate valve. When the charged air pressure exceeds the prescribed pressure, the actuator operates, the waste gate valve opens and part of the exhaust gas by-passes the turbine. This causes a drop in the turbine revolution rate and controls the charged air pressure within the prescribed limits.

PRECAUTIONS

1. Do not stop the engine immedialtely after pulling a trailer or high speed or uphill driving. Idle the engine for 20 – 120 seconds, depending on the severity of the driving condition.
2. Avoid sudden racing or acceleration immediately after starting a cold engine.
3. If the turbocharger is defective and must be replaced, first check for the cause of the defect in reference to the following items and replace parts if necessary:
   - Engine oil level and quality
   - Conditions under which the turbocharger was used
   - Oil lines leading to the turbocharger

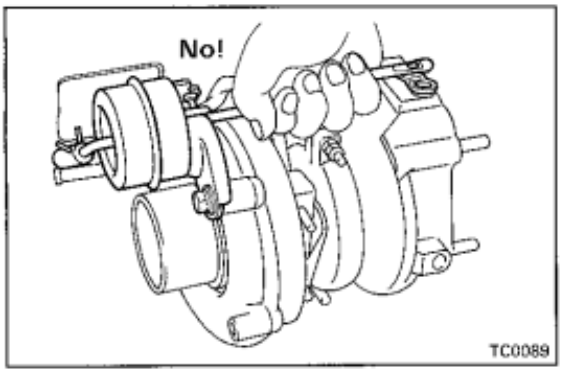

4. Use caution when removing and reinstalling the turbocharger assembly. Do not drop it or bang it against anything or grasp it by easily-deformed parts, such as the actuator or rod, when moving it.
5. Before removing the turbocharger, plug the intake and exhaust ports and oil inlet to prevent entry of dirt or other foreign material.

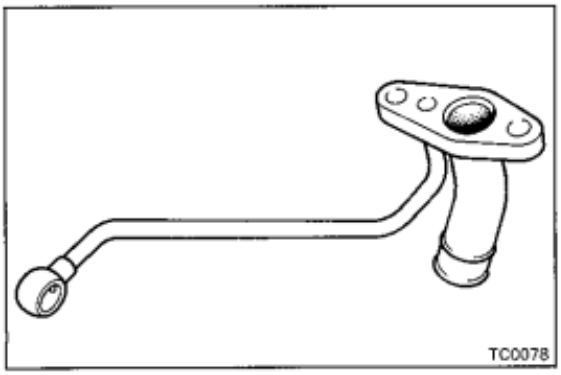

6. If replacing the turbocharger, check for accumulation of sludge particles in the oil pipes and, if necessary, replace the oil pipes.
7. Completely remove the gasket adhered to the lubrication oil pipe flange and turbocharger oil flange.
8. If replacing bolts or nuts, do so only with the specified new ones to guard against breakage or deformation.

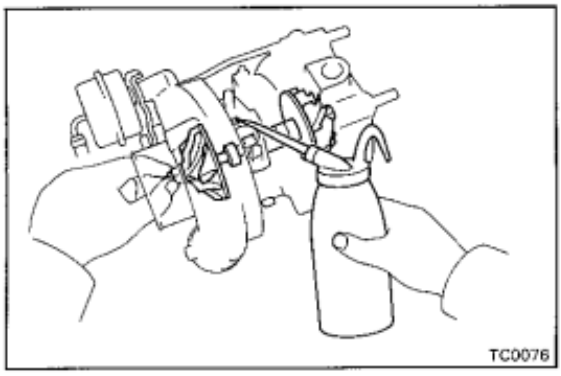

9. If replacing the turbocharger, put 20 cc (1.2 cu in.) of oil into the turbocharger oil inlet and turn the impeller wheel by hand to spread oil to the bearing.
10. If overhauling or replacing the engine, cut the fuel supply after reassembly and crank the engine for 30 seconds to distribute oil throughout the engine. Allow the engine to idle for 60 seconds.

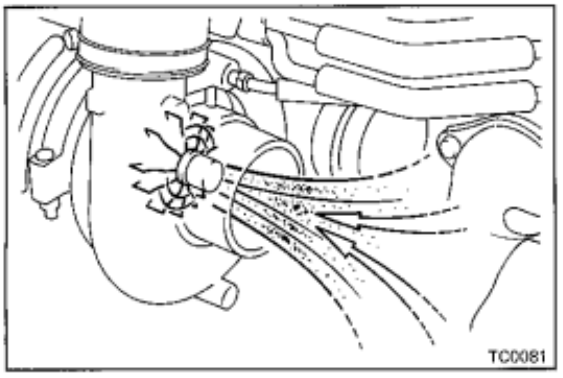

11. **If the engine is running with the air cleaner, case cover and hose removed, foreign particles entering will damage the wheels which run at extremely high speed.**

TROUBLESHOOTING

HINT: Before troubleshooting the turbocharger, first check the engine itself. (Valve clearance, engine compression, injection timing etc.)

INSUFFICIENT ACCELERATION, LACK OF POWER OR EXCESSIVE FUEL CONSUMPTION

(Possible Cause)	(Check Procedure and Correction Method)
1. TURBOCHARGING PRESSURE TOO LOW	Check turbocharging pressure. (See page TC-8) **Turbocharging pressure:** **0.50 – 0.65 kg/cm^2** **(7.1 – 9.2 psi, 49 – 64 kPa)** If the pressure is below specification, begin diagnosis from item 2.
2. RESTRICTED INTAKE AIR SYSTEM	Check intake air system, and repair or replace parts as necessary. (See page TC-8)
3. LEAK IN INTAKE AIR SYSTEM	Check intake air system, and repair or replace parts as necessary. (See page TC-8)
4. RESTRICTED EXHAUST SYSTEM	Check exhaust system, and repair or replace parts as necessary. (See page TC-8)
5. LEAK IN EXHAUST SYSTEM	Check exhaust system, and repair or replace parts as necessary. (See page TC-8)
6. ERRATIC TURBOCHARGER OPERATION	Check rotation of impeller wheel. If it does not turn or turns with a heavy drag, replace the turbocharger assembly. Check plays of turbine shaft. (See page TC-12) **Axial play: 0.13 mm (0.0051 in.) or less** **Radial play: 0.18 mm (0.0071 in.) or less** If not within specification, replace the turbocharger assembly.

ABNORMAL NOISE

(Possible Cause)	(Check Procedure and Correction Method)
1. TURBOCHARGER INSULATOR RESONANCE	Check for loose, improperly installed or deformed insulator mount bolts and nuts, and repair or replace as necessary.
2. EXHAUST PIPE LEAKING OR VIBRATING	Check for exhaust pipe deformation, loose mount bolts or a damaged gasket, and repair or replace as necessary.
3. ERRATIC TURBOCHARGER OPERATION	Refer to item 6 of INSUFFICIENT ACCELERATION, LACK OF POWER OR EXCESSIVE FUEL CONSUMPTION.

EXCESSIVE OIL CONSUMPTION OR WHITE EXHAUST

(Possible Cause)	(Check Procedure and Correction Method)
FAULTY TURBOCHARGER OIL SEAL	Check for oil leakage in exhaust system. • Remove the turbine elbow from the turbocharger and check for excessive carbon deposits on the turbine wheel. Excessive carbon deposits would indicate a faulty turbocharger. Check for oil leakage in intake air system. • Check for plays in turbine shaft, and replace the turbocharger if necessary. (See page TC-12) **Axial play: 0.13 mm (0.0051 in.) or less** **Radial play: 0.18 mm (0.0071 in.) or less**

TURBOCHARGER

ON-VEHICLE INSPECTION OF TURBOCHARGER

1. INSPECT INTAKE AIR SYSTEM

Check for leakage or clogging between the air cleaner and turbocharger inlet and between the turbocharger outlet and cylinder head.

- Clogged air cleaner .... Clean or replace the element
- Hoses collapsed or deformed .... Check each connection and repair
- Cracks in components .... Check and replace

2. INSPECT EXHAUST SYSTEM

Check for leakage or clogging between the cylinder head and turbocharger inlet and between the turbocharger outlet and exhaust pipe.

- Deformed components .... Repair or replace
- Foreign material in passages .... Remove
- Leakage from components .... Repair or replace
- Cracks in components .... Check and replace

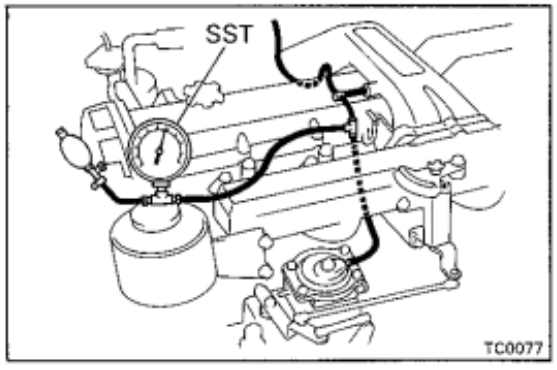

3. CHECK TURBOCHARGING PRESSURE

(a) Warm up engine.

(b) Connect a 3-way union to the intake pipe pressure hose and install SST (turbocharger pressure gauge) to it.

SST 09992-00241

(b) Press in the clutch pedal, then press the accelerator pedal down as far as it will go. Measure the turbocharging pressure at maximum speed (4,400 rpm).

Standard pressure: 0.50 – 0.65 kg/cm^2 (7.1 – 9.2 psi, 49 – 64 kPa)

If the pressure is less than specification, check the intake air and exhaust systems for leakage. If there is no leakage, replace the turbocharger assembly.
If the pressure is above specification, check if the actuator hose is disconnected or cracked. If not, replace the turbocharger assembly.

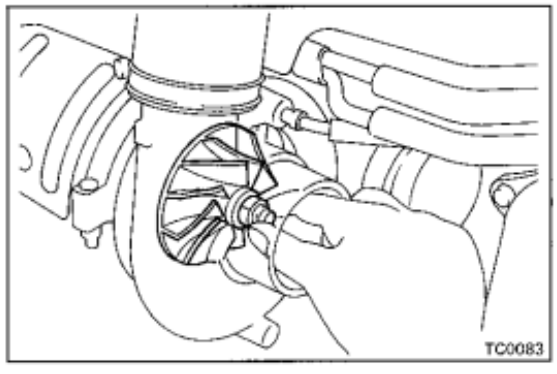

4. INSPECT IMPELLER WHEEL ROTATION

(a) Disconnect the air cleaner hose.

(b) Grasp the edge of the impeller wheel and turn it. Check that it turns smoothly.

If it does not turn or if it turns with drag, replace the turbocharger assembly.

COMPONENTS

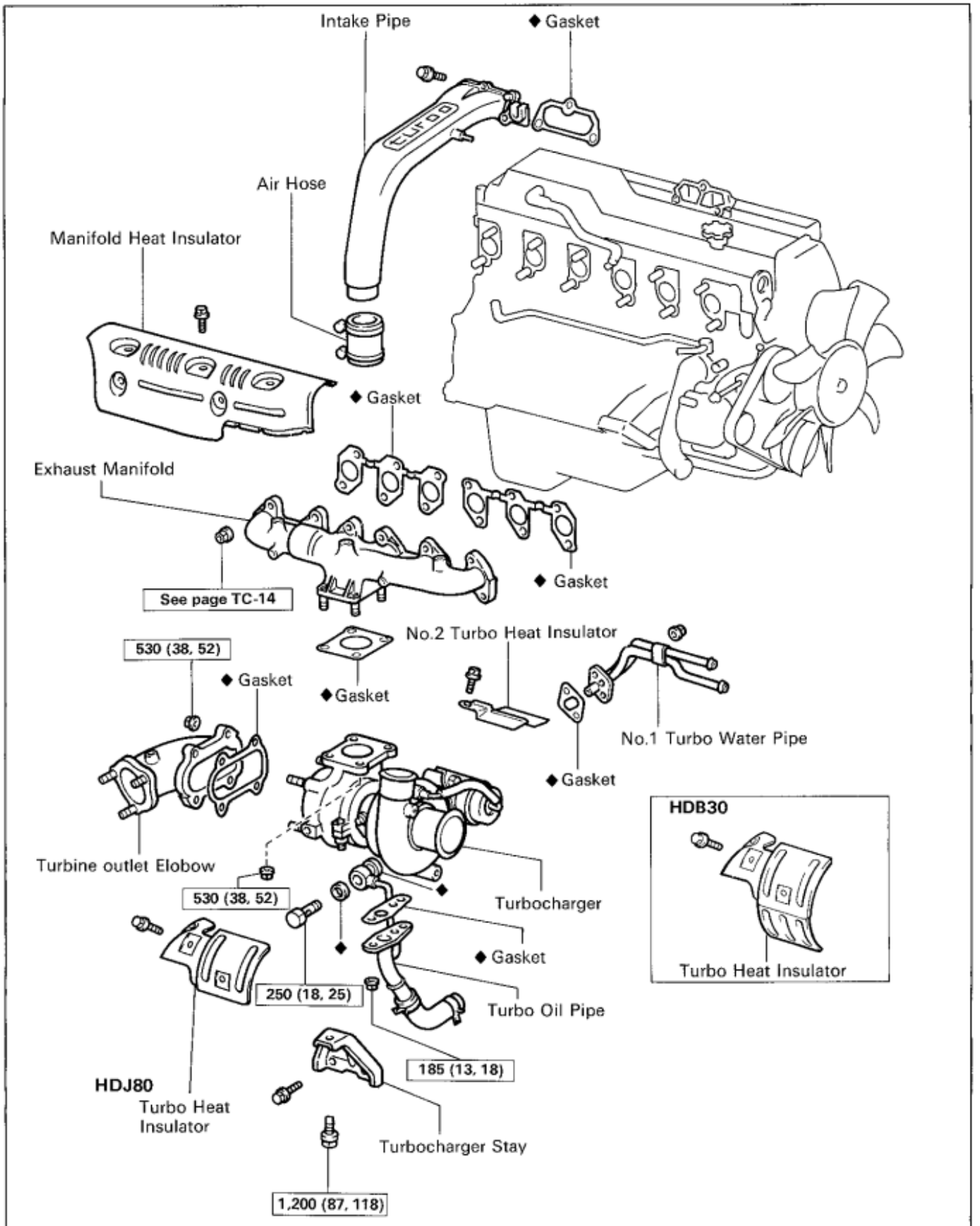

kg-cm (ft-lb, N·m) : Specified torque

◆ Non-reusable part

TC0100

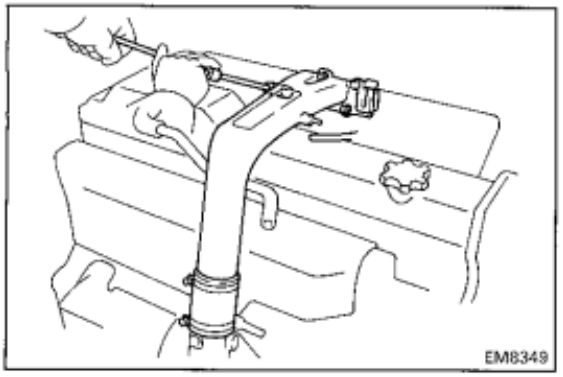

REMOVAL OF TURBOCHARGER

(See page TC-9)

1. **DRAIN ENGINE COOLANT (See page CO-4)**

2. **REMOVE INTAKE PIPE**
   (a) Disconnect the vacuum hose for the boost compensator.
   (b) Disconnect the air hose clamp bolt.
   (c) Remove the three bolts and intake pipe.

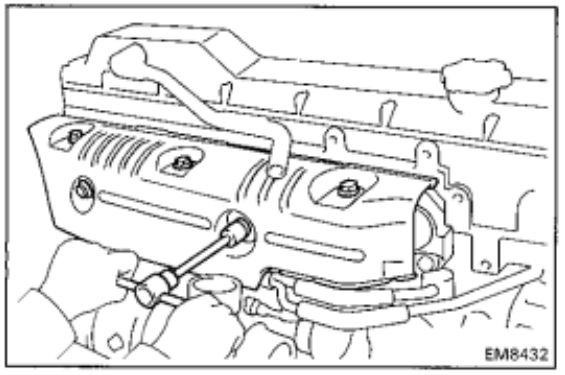

3. **REMOVE EXHAUST MANIFOLD HEAT INSULATOR**
   Remove the five bolts and heat insulator.

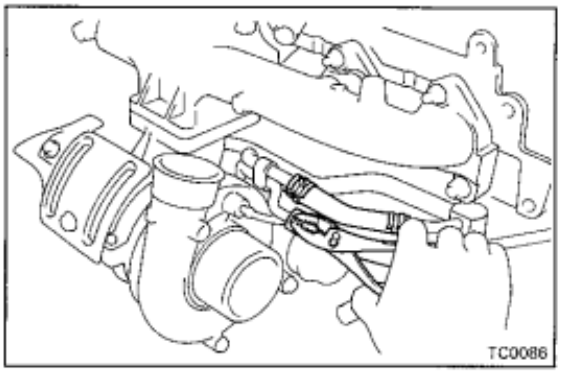

4. **DISCONNECT WATER BY-PASS HOSES**

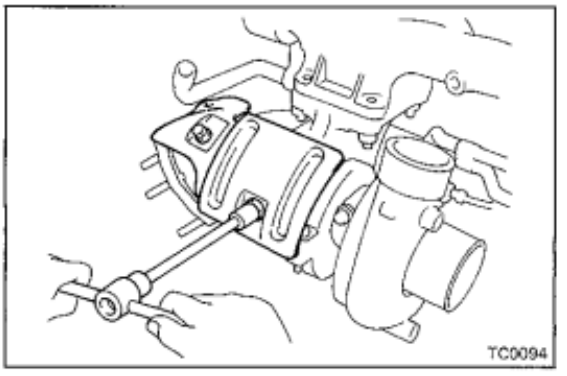

5. **REMOVE TURBO HEAT INSULATOR**
   Remove the two bolt and heat insulator.

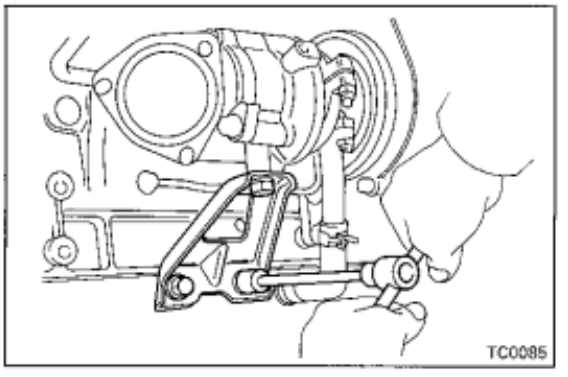

6. **REMOVE TURBOCHARGER STAY**
   Remove the three bolts and turbocharger stay.

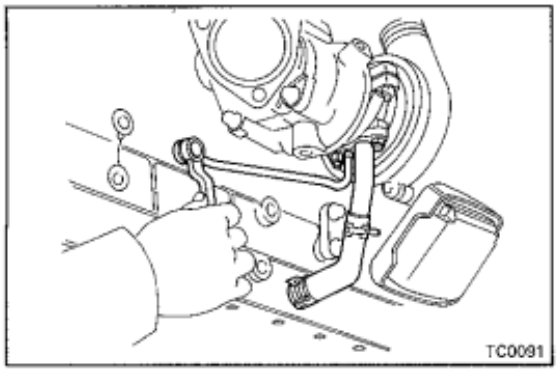

7. REMOVE TURBO OIL PIPE

(a) Remove the union bolt and two gaskets holding the turbo oil pipe to the cylinder block.

(b) Disconnect the turbo oil hose.

(c) Remove the two nuts, turbo oil pipe and gasket.

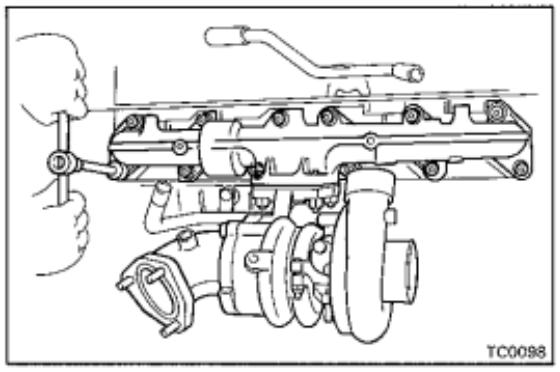

8. REMOVE TURBOCHARGER AND EXHAUST MANIFOLD ASSEMBLY

Remove the twelve nuts, the turbocharger and exhaust manifold assembly and gaskets.

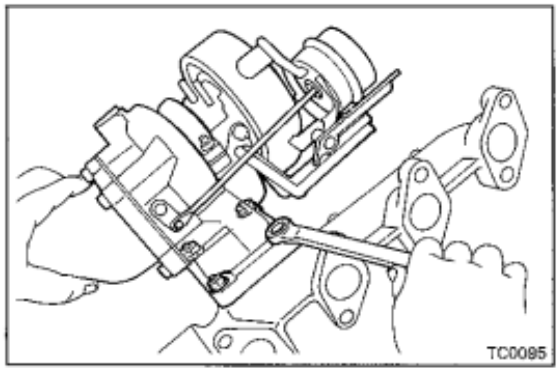

9. SEPARATE TURBOCHARGER AND EXHAUST MANIFOLD

Remove the four nuts, turbocharger and gasket.

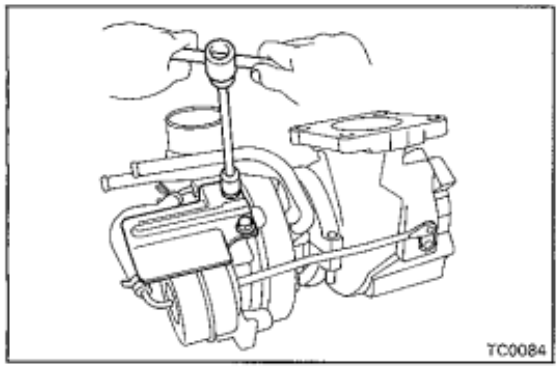

10. REMOVE NO.2 TURBO HEAT INSULATOR

Remove the two bolts and No.2 turbo heat insulator.

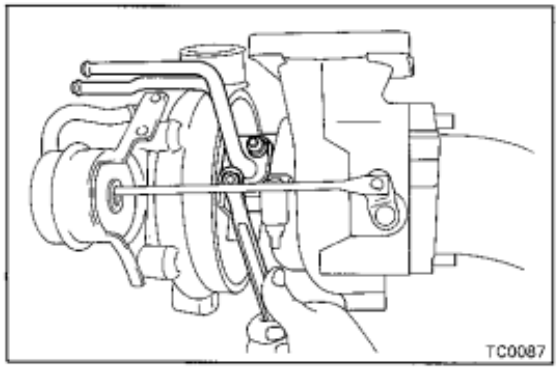

11. REMOVE NO.1 TURBO WATER PIPE

Remove the two nuts, No.1 turbo water pipe and gasket.

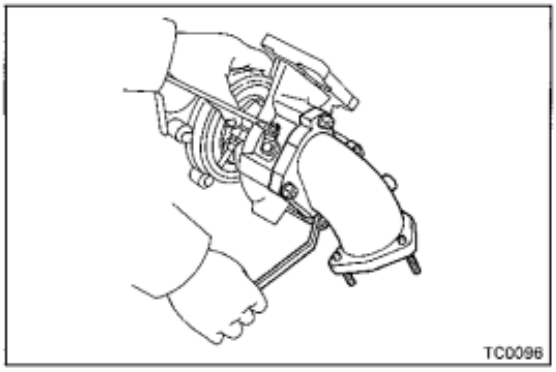

12. REMOVE TURBINE OUTLET ELBOW

Remove the four nuts, turbine outlet elbow and gasket.

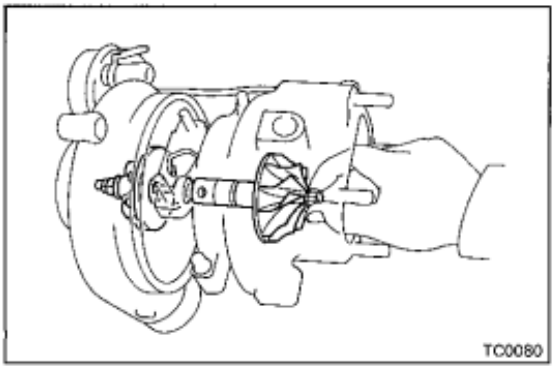

INSPECTION OF TURBOCHARGER

1. INSPECT IMPELLER WHEEL ROTATION

Grasp the edge of the turbine wheel and turn it. Check that the impeller wheel turns smoothly.

If the impeller wheel does not turn or if it turns with a drag, replace the turbocharger assembly.

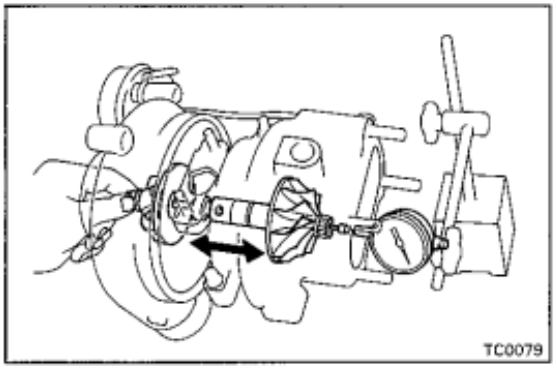

2. INSPECT AXIAL PLAY OF IMPELLER WHEEL

Insert a dial indicator into the exhaust side, hold the turbine wheel edge by hand and check the axial play.

Axial play: 0.13 mm (0.0051 in.) or less

If the axial play is not as specified, replace the turbocharger assembly.

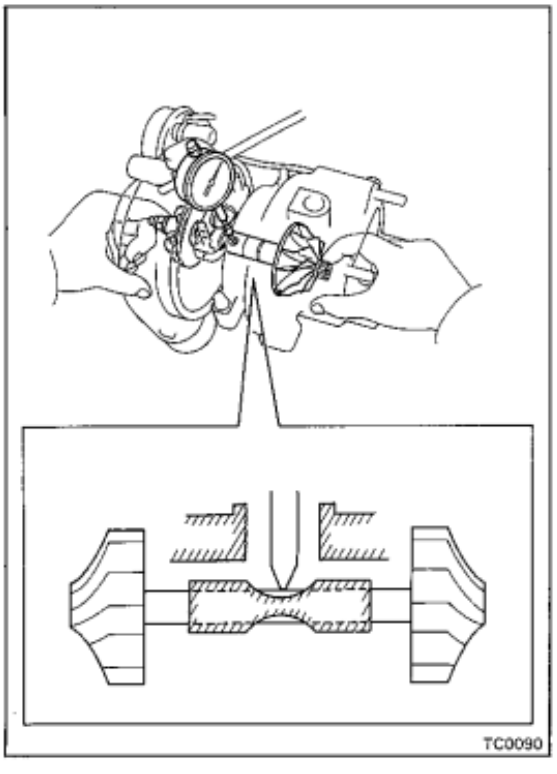

3. INSPECT RADIAL PLAY OF TURBINE SHAFT

(a) From the oil outlet hole, insert the dial indicator through the hole in the spacer bearing and set it in the center of the turbine shaft.

(b) Moving the turbine shaft in a radial direction, measure the radial play of the shaft.

Radial play: 0.18 mm (0.0071 in.) or less

If the radial play is not as specified, replace the turbocharger assembly.

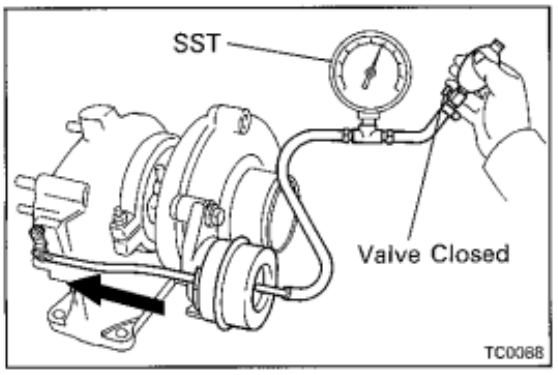

4. INSPECT ACTUATOR OPERATION

(a) Disconnect the actuator hose.

(b) Using SST (turbocharger pressure gauge), apply approx. 0.92 kg/cm^2 (13.1 psi, 90 kpa) of pressure to the actuator and check that the rod moves.

SST 09992-00241

If the rod does not move, replace the turbocharger assembly.

NOTICE: Never apply more than 1.05 kg/cm^2 (14.9 psi, 103 kPa) of pressure to the actuator.

INSTALLATION OF TURBOCHARGER

(See page TC-9)

NOTICE: After replacing the turbocharger assembly, pour approx. 20 cc (1.2 cu in.) of new oil into the oil inlet and turn the impeller wheel by hand to splash oil on the bearing.

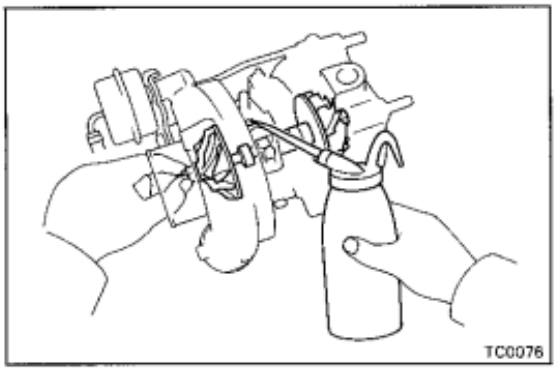

1. INSTALL TURBINE OUTLET ELBOW

Install a new gasket and the turbine outlet elbow with the four nuts.

Torque: 530 kg-cm (38 ft-lb, 52 N·m)

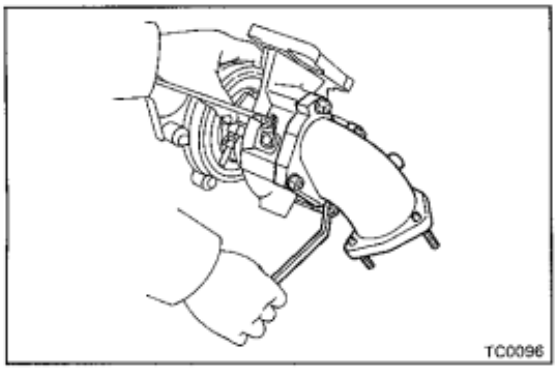

2. INSTALL NO.1 TURBO WATER PIPE

Install a new gasket and the water pipe with the two nuts.

Torque: 80 kg-cm (69 in.-lb, 7.8 N·m)

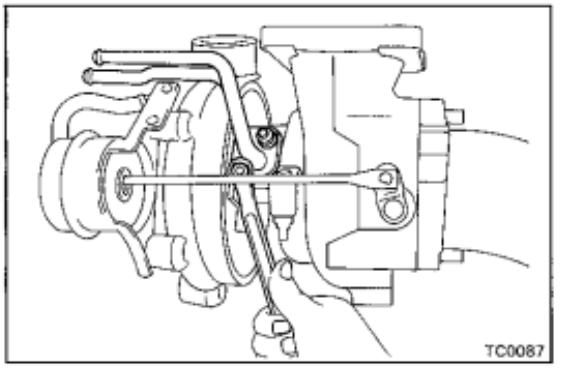

3. INSTALL NO.2 TURBO HEAT INSULATOR

Install the No.2 turbo heat insulator with the two bolts.

Torque: 80 kg-cm (69 in.-lb, 7.8 N·m)

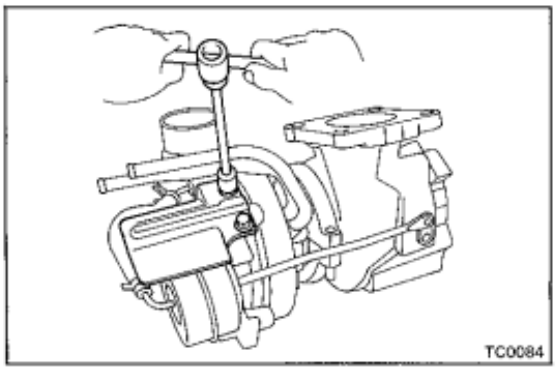

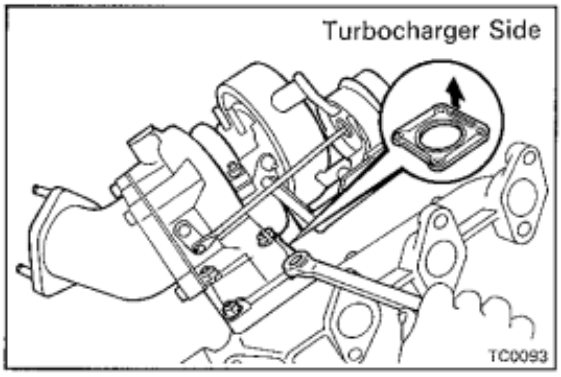

4. ASSEMBLE TURBOCHARGER AND EXHAUST MANIFOLD

Install a new gasket and the turbocharger to the exhaust manifold with the four nuts.

Torque: 530 kg-cm (38 ft-lb, 52 N·m)

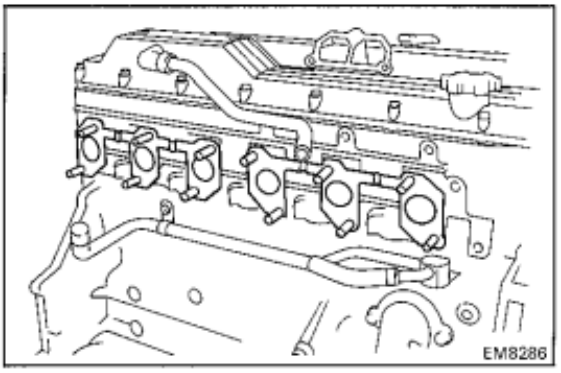

5. INSTALL TURBOCHARGER AND EXHAUST MANIFOLD ASSEMBLY

(a) Install two new gaskets to the cylinder head.

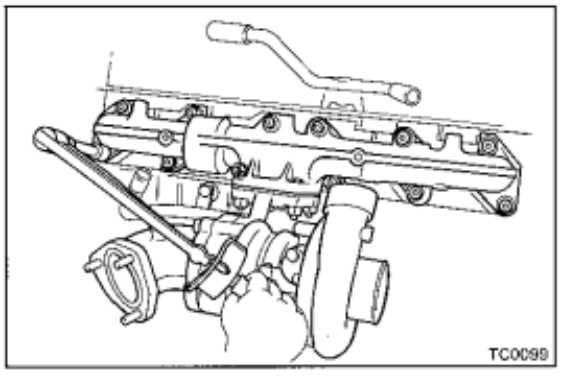

(b) Install the turbocharger and exhaust manifold assembly with the twelve nuts.

Torque: 400 kg-cm (29 ft-lb, 39 N·m)

HINT: Apply 330 kg-cm (24 ft-lb, 32 N·m) of torque when performing additional tightening of loosed nuts.

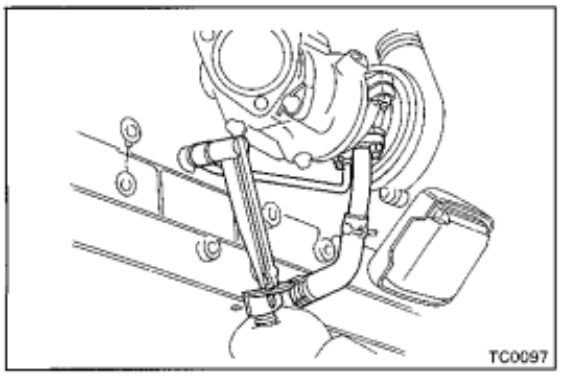

6. INSTALL TURBO OIL PIPE

(a) Install a new gasket and the turbo oil pipe with the two nuts.

Torque: 185 kg-cm (13 ft-lb, 18 N·m)

(b) Connect the turbo oil hose.

(c) Install two new gaskets and the union bolt of the turbo oil pipe.

Torque: 250 kg-cm (18 ft-lb, 25 N·m)

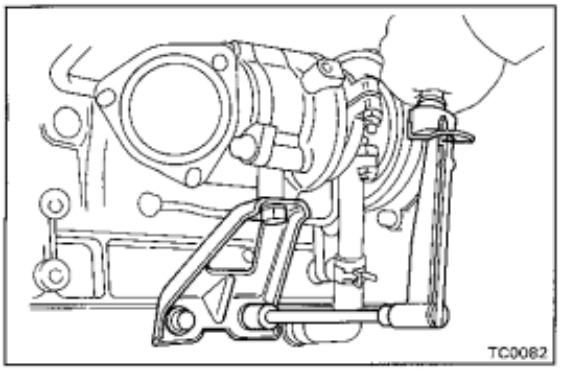

7. INSTALL TURBOCHARGER STAY

Install the turbocharger stay with the three bolts.

Torque: 1,200 kg-cm (87 ft-lb, 118 N·m)

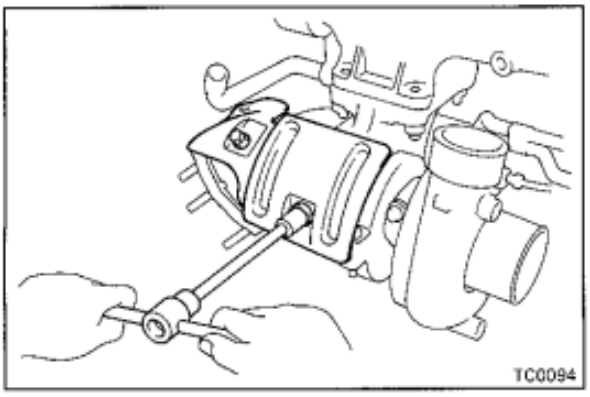

8. **INSTALL TURBOCHARGER HEAT INSULATOR**

Install the heat insulator with the two bolts.

Torque: 185 kg-cm (13 ft-lb, 18 N·m)

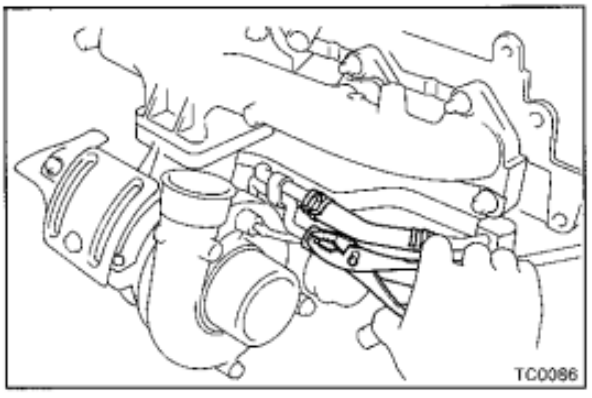

9. **CONNECT WATER BY-PASS HOSES**

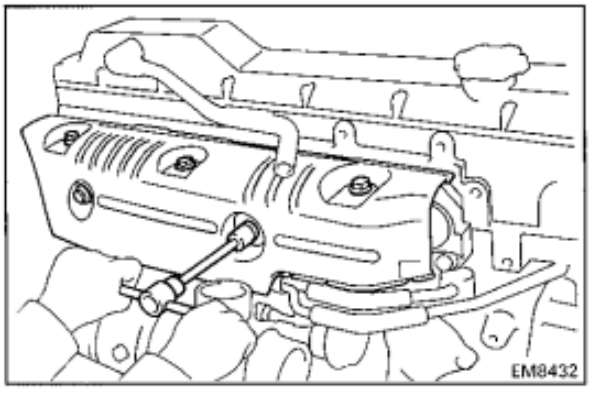

10. **INSTALL EXHAUST MANIFOLD HEAT INSULATOR**

Install the heat insulator with the five bolts.

Torque: 185 kg-cm (13 ft-lb, 18 N·m)

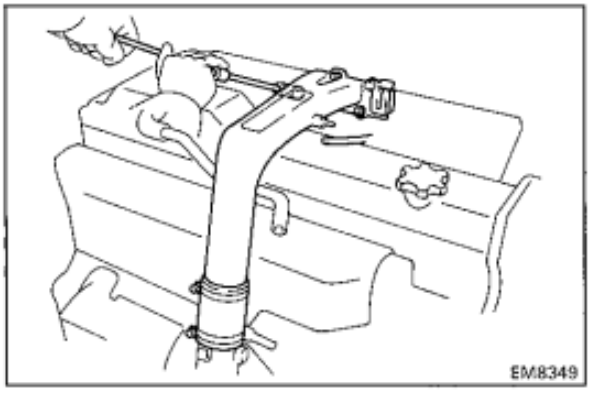

11. **INSTALL INTAKE PIPE**

(a) Connect the air hose and install a new gasket and the intake pipe with the three bolts.

Torque: 200 kg-cm (14 ft-lb, 20 N·m)

(b) Connect boost compensator vacuum hose.

12. **FILL ENGINE WITH COOLANT (See page CO-5)**

13. **START ENGINE AND CHECK FOR LEAKS**

14. **CHECK ENGINE OIL LEVEL**

FUEL SYSTEM

NOTE: For troubleshooting procedures, refer to TROUBLE-SHOOTING (EM Section).

	Page
DESCRIPTION	FU-2
REPLACEMENT OF FUEL FILTER	FU-4
FUEL HEATER SYSTEM	FU-6
INJECTION NOZZLES (1PZ and 1 HZ)	FU-9
INJECTION NOZZLES (1HD-T)	FU-16
INJECTION PUMP	FU-27
POWER CONTROL SYSTEM (PCS) (HDB30(w/ M/T) only)	FU-95

DESCRIPTION

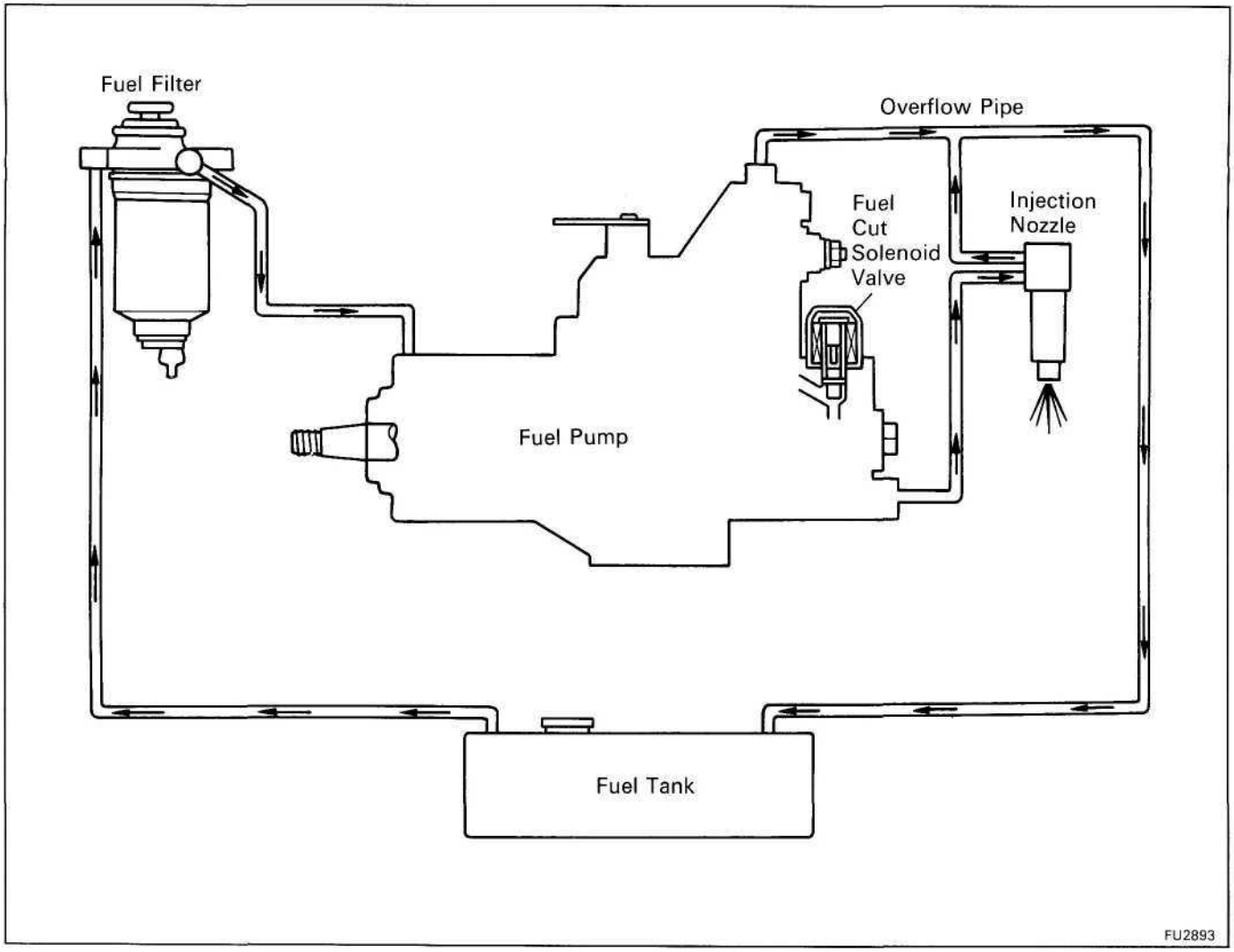

FUEL SYSTEM

Fuel is drawn up from the fuel tank through the fuel filter (sedimenter) by the feed pump built into the injection pump. The fuel drawn up is then sent into the pump housing. Fuel compressed in the pump housing is distributed to the injection nozzles according to the injection order, and injected at high pressure into the combustion chamber. Excess fuel in the pump housing flows through the overflow valve and along the overflow pipe and returns to the fuel tank. The fuel cycle provides both cooling and lubrication for the pump. The cycling of fuel through the pump chamber warms the fuel so that it is prevented from becoming wax-like at cold temperatures.

Injection Pump (VE Pump)

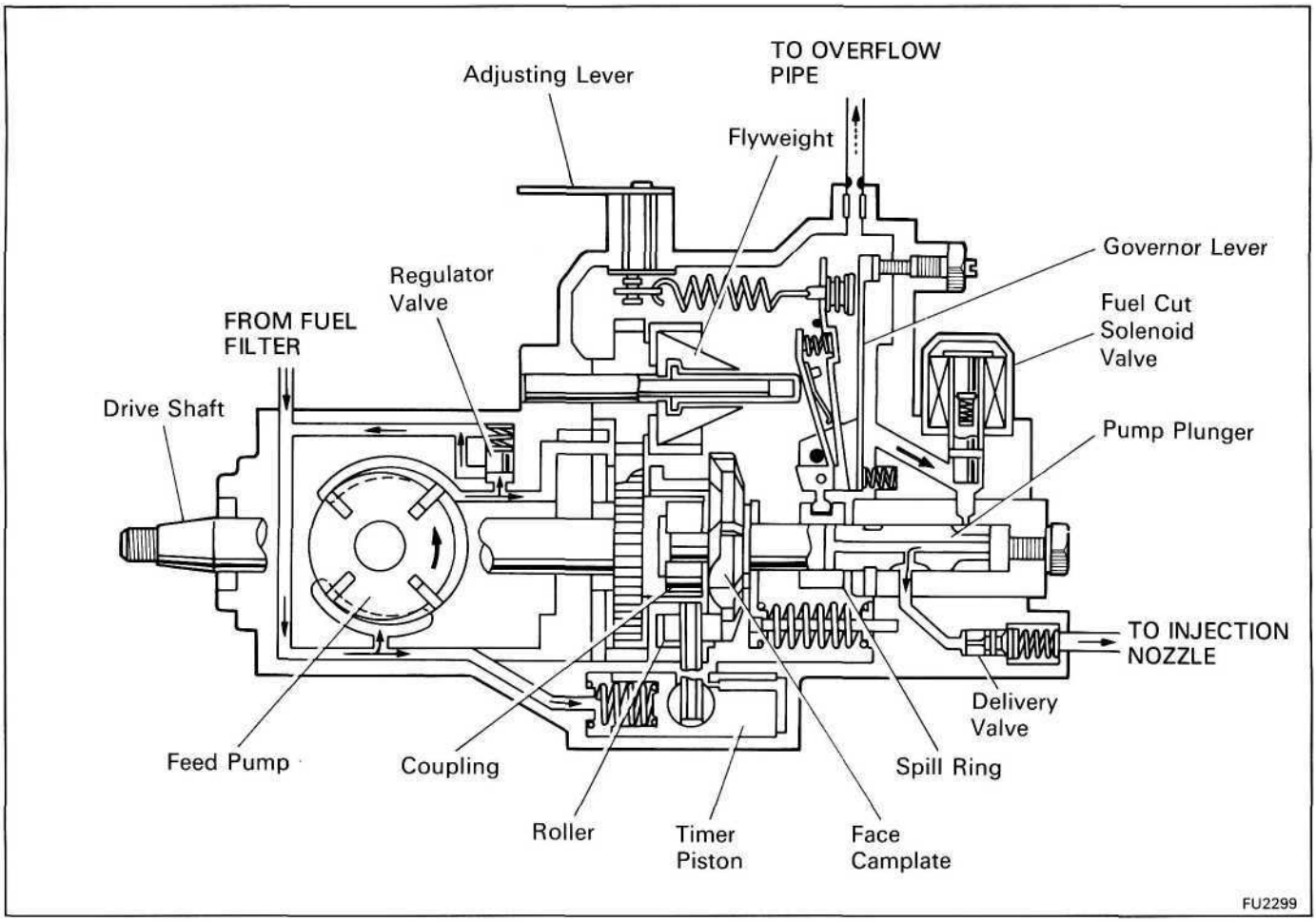

OPERATION

- The centrifugal force type feed pump takes up a fixed volume of fuel with each turn. The fuel expulsion pressure from the feed pump is controlled by operation of the pressure regulator valve.
- Fuel is sent from the outlet side of the feed pump, through the hole in the upper part of the feed pump cover and into the pump body.
- The pump plunger also rotates as it moves up and down. After the fuel is drawn in, it is distributed under pressure to the delivery valve of each cylinder according to the injection order.
- The centrifugal force type all speed governor installed in the upper part of the injection pump moves the spill ring obstructing the plunger spill port and controls the fuel injection volume.
- The hydraulic type timer installed in the lower part of the injection pump is operated by the fuel pressure of the pump housing, and movement of the roller ring by the timer advances the injection angle and controls the injection timing.
- The fuel cut solenoid valve is connected to the starter switch IG circuit, and when the starter switch is turned to OFF, the current is cut off, the solenoid is de-energized, fuel is cut off and the engine stops.
- High Altitude Compensation (HAC) Device
  Due to the decrease in atmospheric pressure at high altitudes, the air fuel ratio becomes more dense and the smoke density increases. To prevent this, the device automatically reduces the fuel injection volume for full loads in response to the altitude.
- Boost Compensator with turbocharger
  The boost compensator is installed on the upper part of the governor of the injection pump. Turbocharged air pressure moves the diaphragm and push rod up and down, this movement is conveyed to the spill ring and the fuel injection volume increases according to the degree of movement.

REPLACEMENT OF FUEL FILTER

1. DISCONNECT FUEL FILTER WARNING SWITCH CONNECTOR

2. DRAIN FUEL FROM FUEL FILTER

(a) Connect a vinyl hose to the drain cock, and insert the other end of the vinyl hose in a container.

(b) Loosen the drain plug, and drain the fuel.

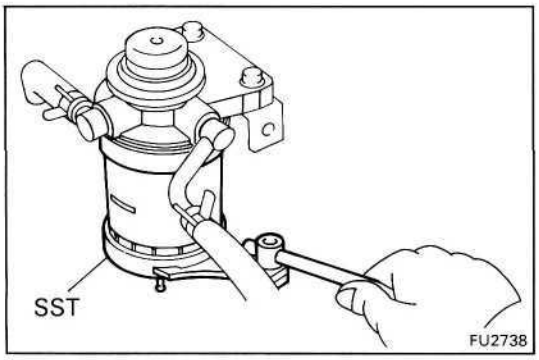

3. REPLACE FUEL FILTER

A. Remove fuel filter

Using SST, remove the fuel filter.

SST 09228-64010

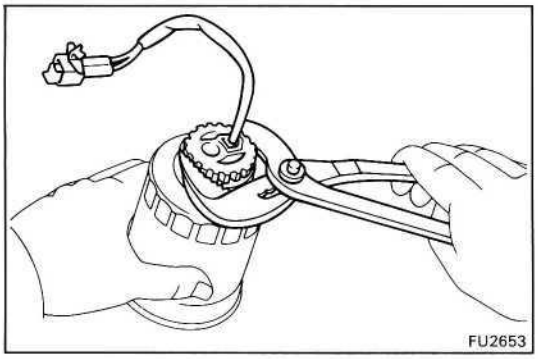

B. Remove fuel filter warning switch from fuel filter

Using pliers, remove the warning switch and O-ring.

NOTICE: Be careful not to damage the warning switch.

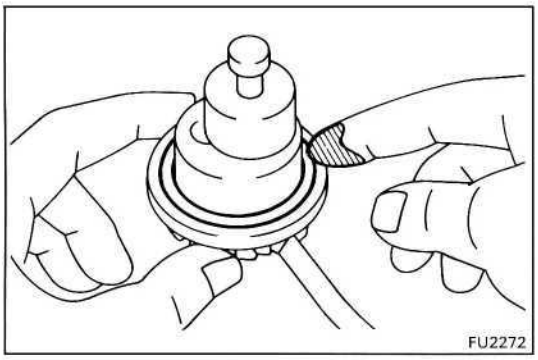

C. Install fuel filter warning switch to new fuel filter

(a) Install a new O-ring to the warning switch.

(b) Apply fuel to the O-ring of the warning switch.

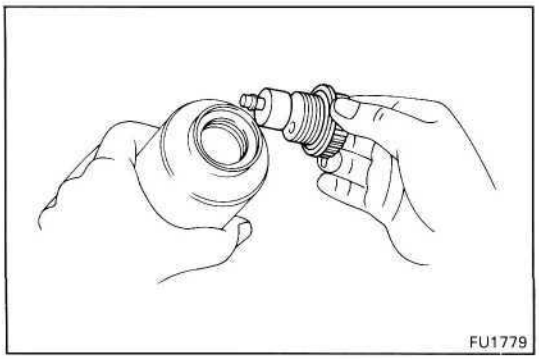

(c) Install the warning switch to a new fuel filter by hand.

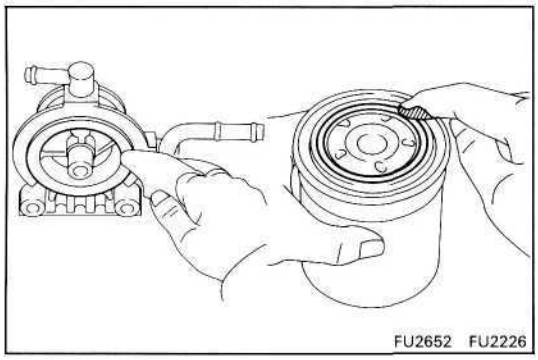

D. Install new fuel filter

(a) Check and clean the fuel filter installation surface.

(b) Apply fuel to the gasket of a new fuel filter.

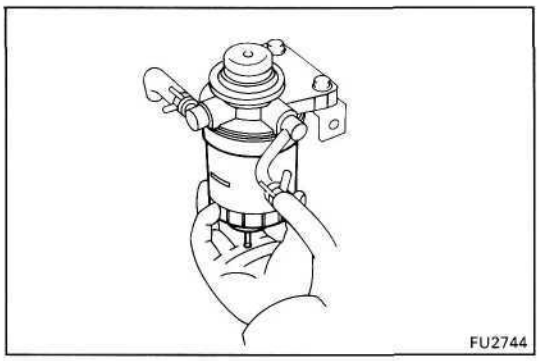

(c) Lightly screw the fuel filter into place, and tighten it until the gasket comes into contact with the seat.

(d) Tighten it additional 3/4 turn by hand.

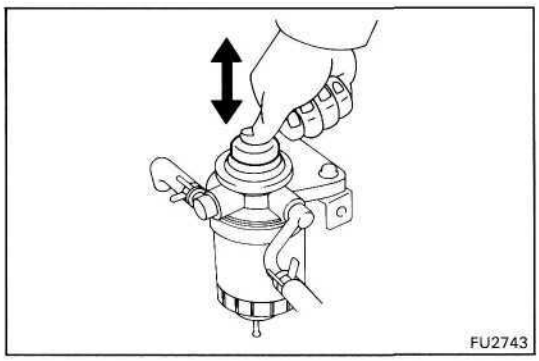

4. FILL FUEL FILTER WITH FUEL

Operate the hand pump until you feel more resistance.

5. CONNECT FUEL FILTER WARNING SWITCH CONNECTOR

6. START ENGINE AND CHECK FOR FUEL LEAKS

FUEL HEATER SYSTEM

SYSTEM CIRCUIT

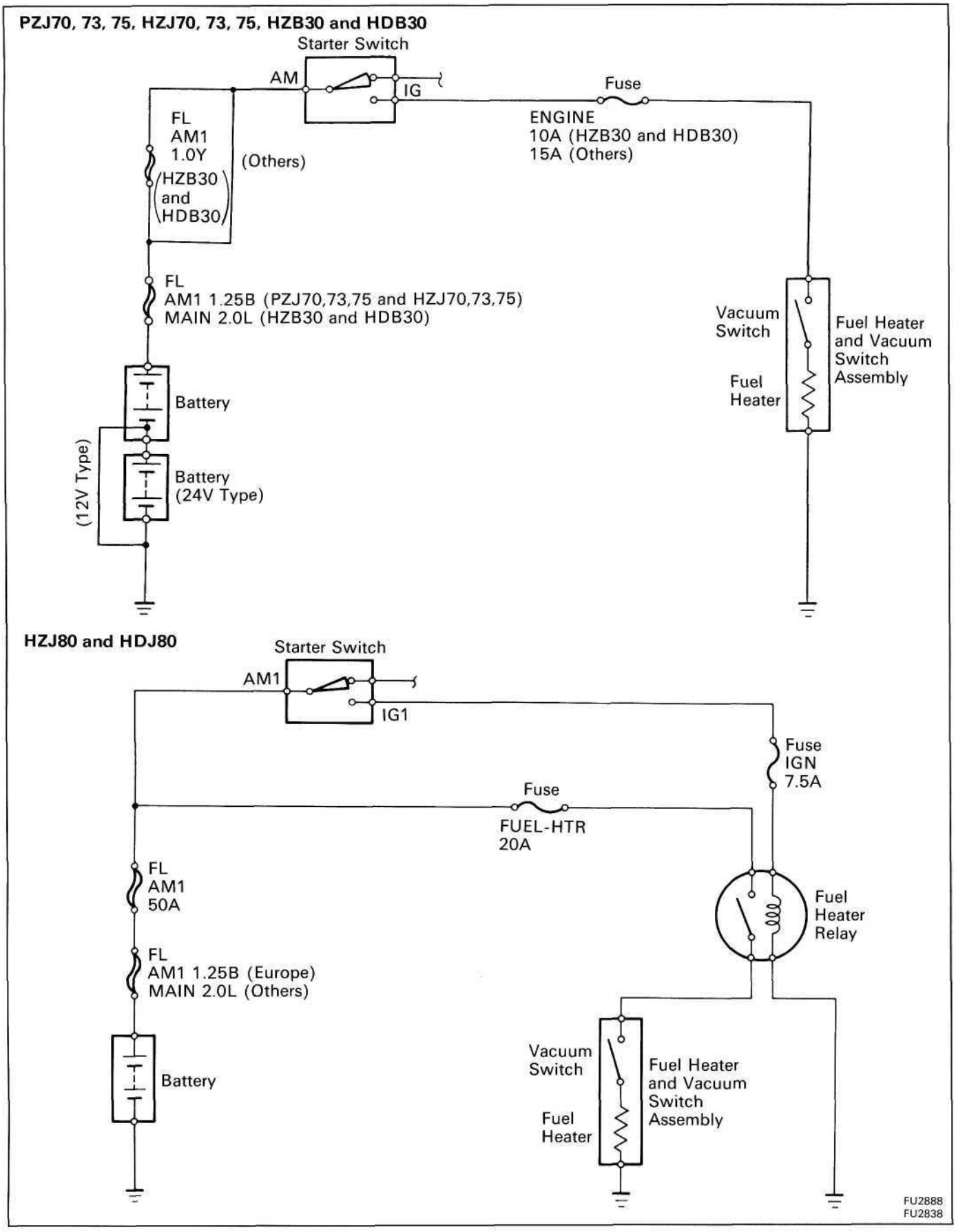

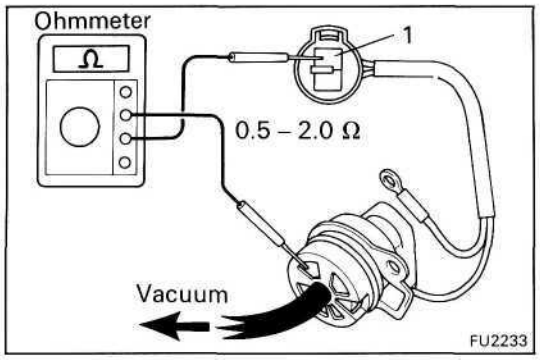

INSPECTION OF COMPONENTS

Fuel Heater

INSPECT FUEL HEATER

(a) Apply a vacuum of 350 ± 50 mmHg (13.78 ± 1.97 in.Hg, 46.7 ± 6.7 kPa) or more to the vacuum switch port.

(b) Using an ohmmeter, measure the resistance between terminal 1 and the switch body.

Resistance: 0.5-2.0 Q **at 20°C (68°F)**

If the resistance is not as specified, replace the fuel heater and vacuum switch assembly.

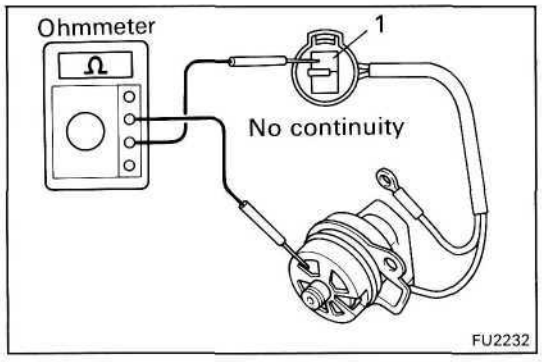

Vacuum Switch

1. INSPECT SWITCH CONTINUITY

Using an ohmmeter, check that there is no continuity between terminal 1 and the switch body.

If continuity is not as specified, replace the fuel heater and vacuum switch assembly.

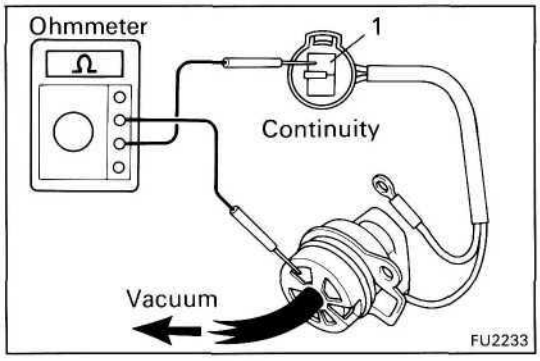

2. INSPECT SWITCH OPERATION

(a) Apply a vacuum of 350 ± 50 mmHg (13.78 ± 1.97 in.Hg, 46.7 ± 86.7 kPa) or more to the vacuum switch port.

(b) Using an ohmmeter, check that there is continuity between terminal 1 and the switch body.

If operation is not as specified, replace the fuel heater and vacuum switch assembly.

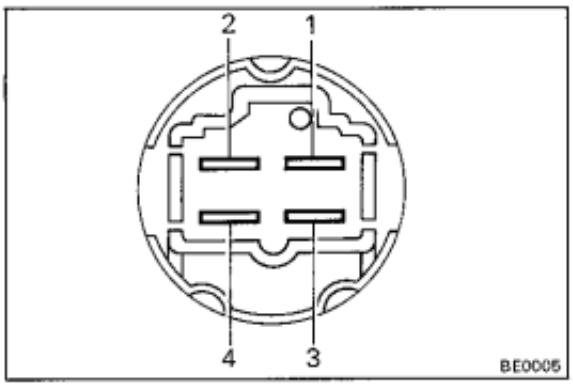

Fuel Heater Relay (HZJ80 and HDJ80 only)

LOCATION: In the engine compartment relay box.

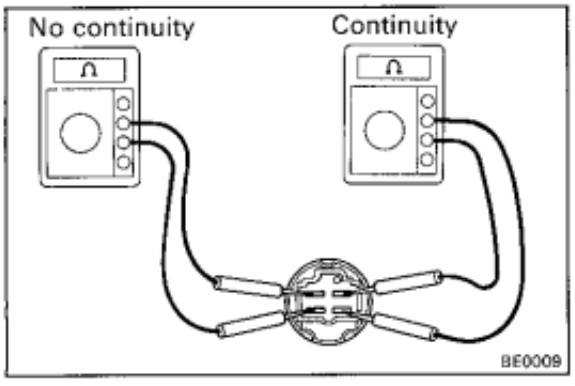

1. INSPECT RELAY CONTINUITY

(a) Using an ohmmeter, check that there is continuity between terminals 1 and 3.

(c) Check that there is no continuity between terminals 2 and 4.

If continuity is not as specified, replace the relay.

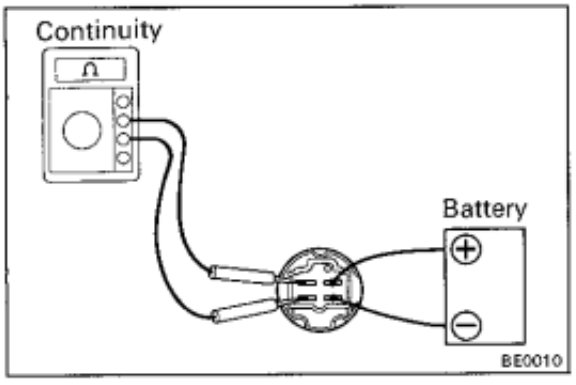

2. INSPECT RELAY OPERATION

(b) Apply battery voltage across terminals 1 and 3.

(c) Using an ohmmeter, check that there is continuity between terminals 2 and 4.

If operation is not as specified, replace the relay.

INJECTION NOZZLES (1 PZ and 1 HZ)

REMOVAL OF INJECTION NOZZLES

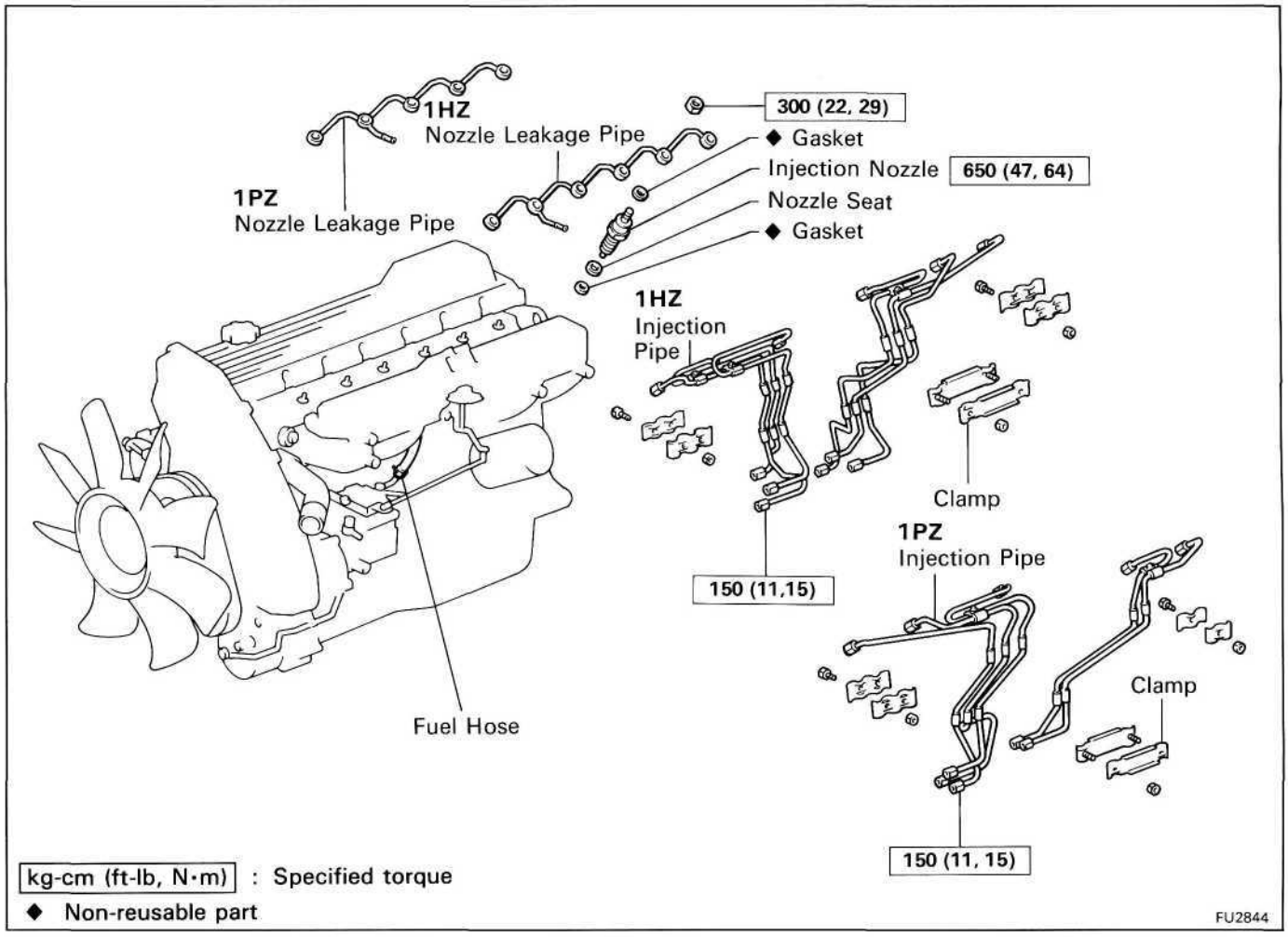

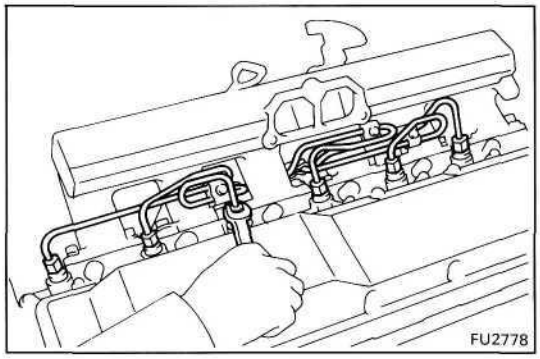

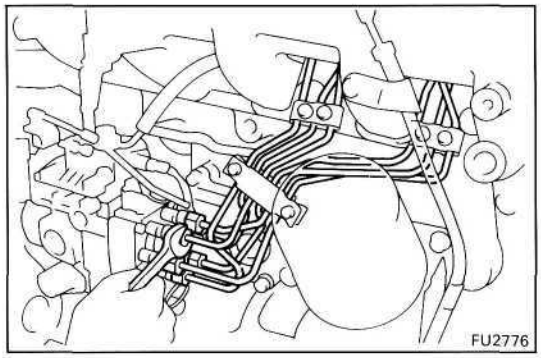

1. REMOVE INTAKE PIPE
(See step 6 on page EM-34)

2. REMOVE INJECTION PIPES

(a) Loosen the union nuts of the injection pipes from the injection nozzles.

(b) Loosen the union nuts of the injection pipes from the injection pump.

(c) Remove the three clamps and injection pipes.

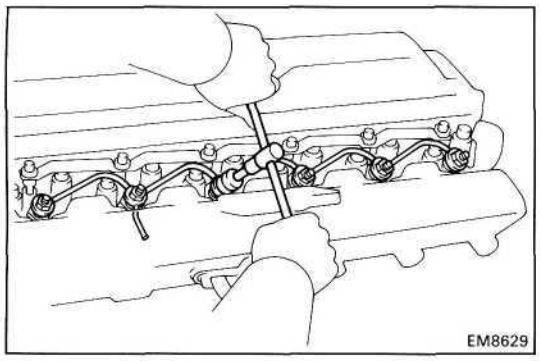

3. REMOVE NOZZLE LEAKAGE PIPE

(a) Disconnect the fuel hose from the nozzle leakage pipe.

(b) Remove the nuts, leakage pipe and gaskets.

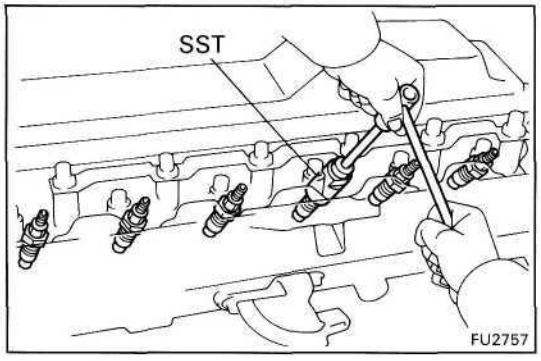

4. REMOVE INJECTION NOZZLES

Using SST, remove the injection nozzles, seats and gaskets.

SST 09268-64010

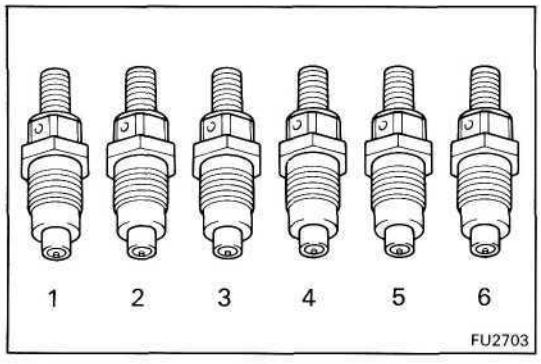

HINT: Arrange the injection nozzles in correct order.

TEST OF INJECTION NOZZLES

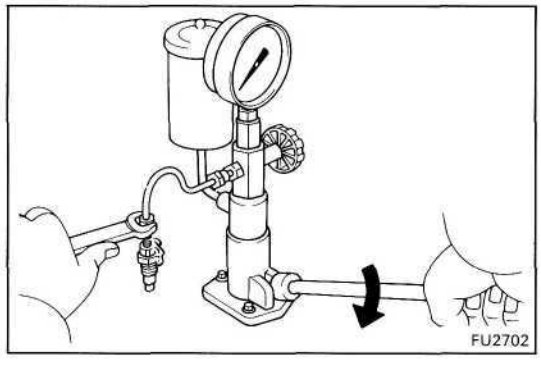

1. INJECTION PRESSURE TEST

(a) Install the injection nozzle to the injection nozzle hand tester and bleed air from the union nut.

CAUTION: Do not place your finger over the nozzle injection hole.

(b) Pump the tester handle a few times as fast as possible to discharge the carbon from the injection hole.

(c) Pump the tester handle slowly and observe the pressure gauge.

(d) Read the pressure gauge just as the injection pressure begins to drop.

Opening pressure:

New nozzle	**145 - 155 kg/cm^2 (2,062-2,205 psi) (14,220-15,200 kPa)**
Reused nozzle	**135 - 155 kg/cm^2 (1,920-2,205 psi) (13,239-15,200 kPa)**

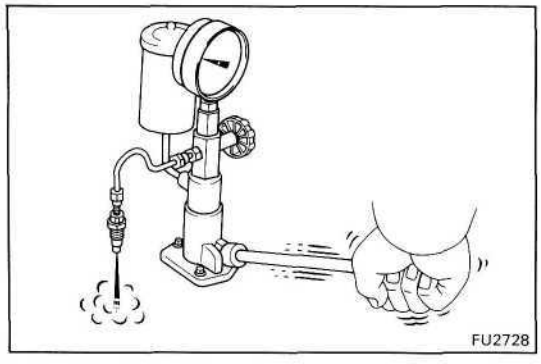

HINT: Proper nozzle operation can be determined by a swishing sound.

If the opening pressure is not as specified, disassemble he nozzle holder and change the adjusting shim on the top of the pressure spring. (See page FU-13).

Adjusted opening pressure: 135- 155 kg/cm^2 (1,920-2.205 psi) (13,239-15,200 kPa)

Adjusting shim thickness mm (in.)		
0.900 (0.0354)	1.275 (0.0502)	1.650 (0.0650)
0.925 (0.0364)	1.300 (0.0512)	1.675 (0.0659)
0.950 (0.0374)	1.325 (0.0522)	1.700 (0.0669)
0.975 (0.0384)	1.350 (0.0531)	1.725 (0.0679)
1.000 (0.0394)	1.375 (0.0541)	1.750 (0.0689)
1.025 (0.0404)	1.400 (0.0551)	1.775 (0.0699)
1.050 (0.0413)	1.425 (0.0561)	1.800 (0.0709)
1.075 (0.0423)	1.450 (0.0571)	1.825 (0.0719)
1.100 (0.0433)	1.475 (0.0581)	1.850 (0.0728)
1.125 (0.0443)	1.500 (0.0591)	1.875 (0.0738)
1.150 (0.0453)	1.525 (0.0600)	1.900 (0.0748)
1.175 (0.0463)	1.550 (0.0610)	1.925 (0.0758)
1.200 (0.0472)	1.575 (0.0620)	1.950 (0.0768)
1.225 (0.0482)	1.600 (0.0630)	
1.250 (0.0492)	1.625 (0.0640)	

HINT:

- Varying the adjusting shim thickness by 0.025 mm (0.0010 in.) changes the injection pressure by about 4.5 kg/cm^2 (64 psi, 441 kPa) (1PZ).
- Varying the adjusting shim thickness by 0.025 mm (0.0010 in.) changes the injection pressure by about 3.5 kg/cm^2 (50 psi, 343 kPa) (1HZ).
- Only one adjusting shim should be used.

(f) There should be no dripping after injection.

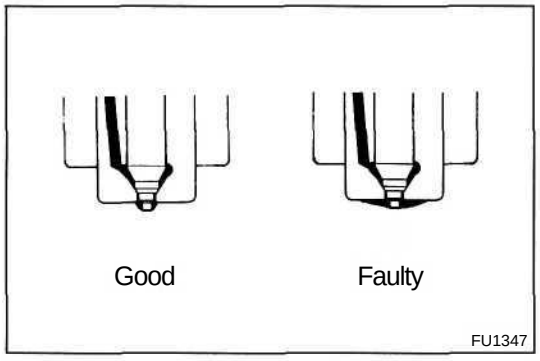

2. LEAKAGE TEST

While maintaining pressure at about 10-20 kg/cm^2 (142-284 psi, 981 -1,961 kPa) below opening pressure (adjust by tester handle), check that there is no dripping for 10 seconds from the injection hole or around the retaining nut.

If the nozzle drips within 10 seconds, replace or clean and overhaul the nozzle assembly.

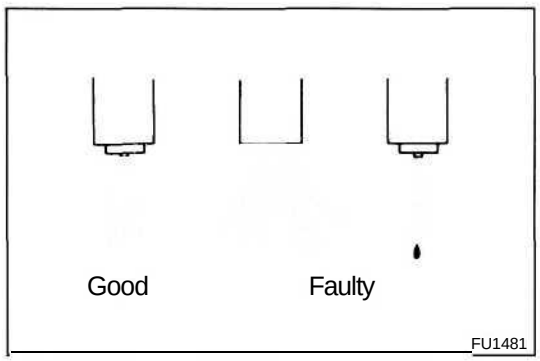

3. SPRAY PATTERN TEST

(a) The injection nozzle should shudder at a certain pumping speed between 15 - 60 times (old nozzle) or 30 - 60 times (new nozzle) per minute.

(b) Check the spray pattern during shuddering.

If the spray pattern is not correct during shuddering, the nozzle must be replaced or cleaned.

COMPONENTS

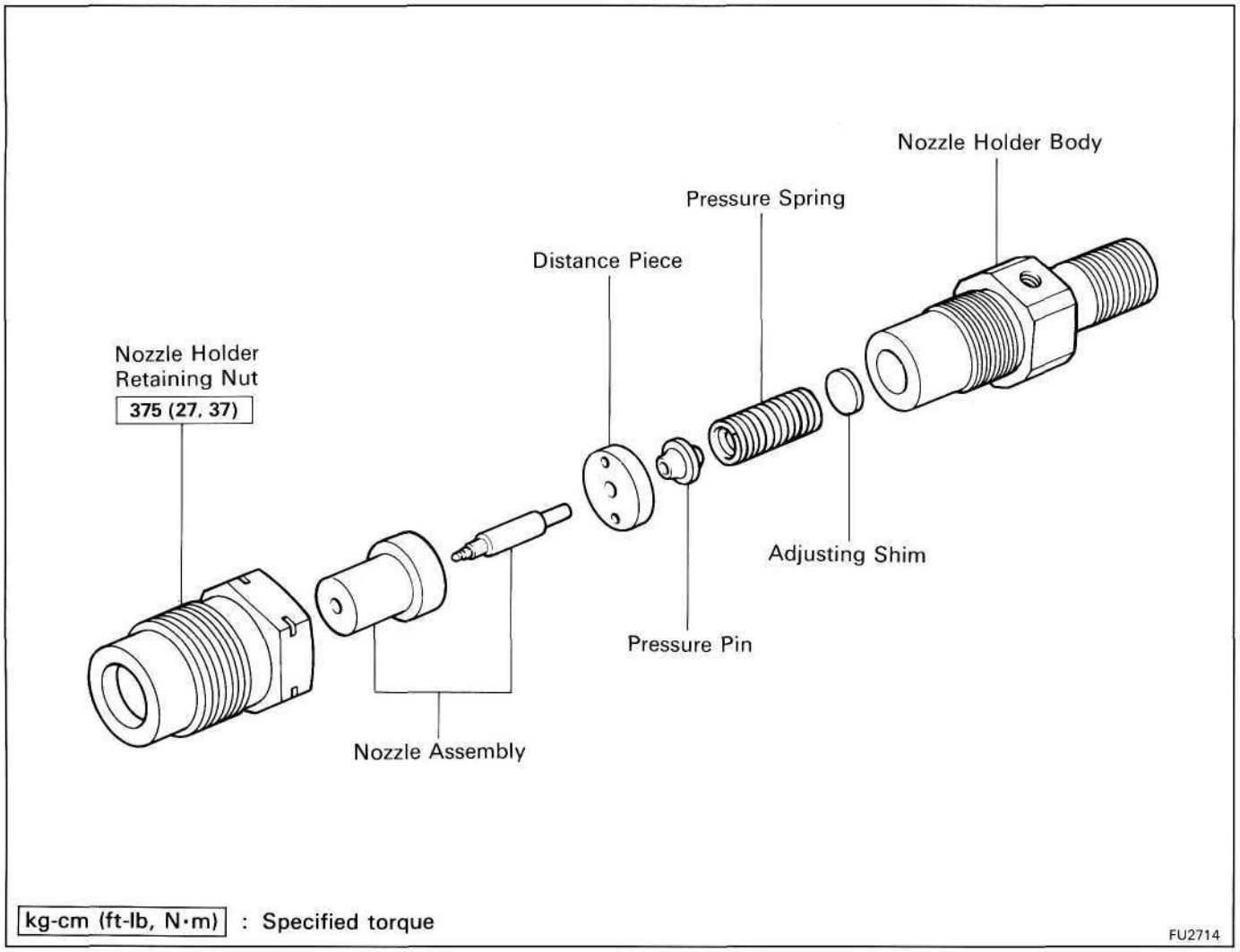

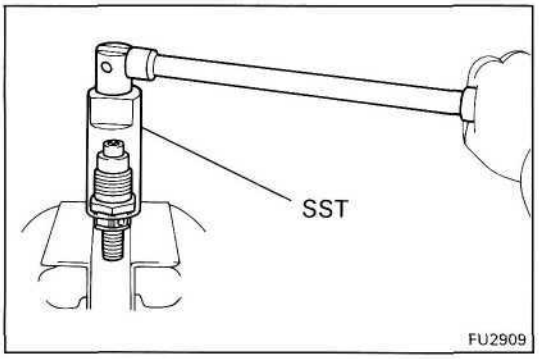

DISASSEMBLY OF INJECTION NOZZLES

DISASSEMBLE INJECTION NOZZLES

(a) Using SST, remove the nozzle holder retaining nut.

SST 09268-64010

NOTICE: When disassembling the nozzle, be careful not to drop the inner parts.

(b) Remove the pressure spring, shim, pressure pin, distance piece and the nozzle assembly.

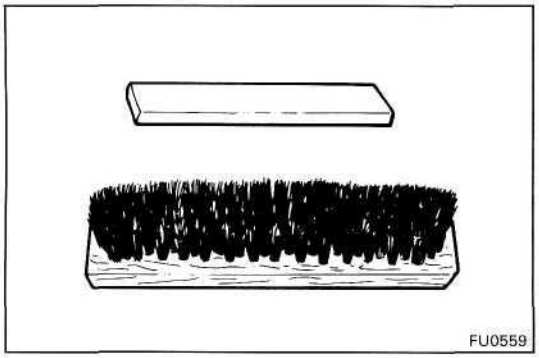

CLEANING AND INSPECTION OF INJECTION NOZZLES

1. NOZZLE CLEANING

(a) To wash the nozzles. Use a wooden stick and brass brush. Wash them in clean diesel fuel.

HINT: Do not touch the nozzle mating surfaces with your fingers.

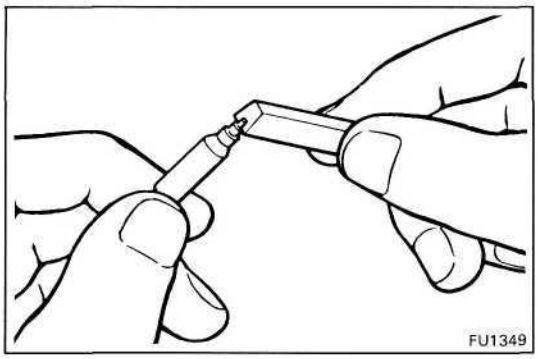

(b) Using a wooden stick, remove the carbon adhering to the nozzle needle tip.

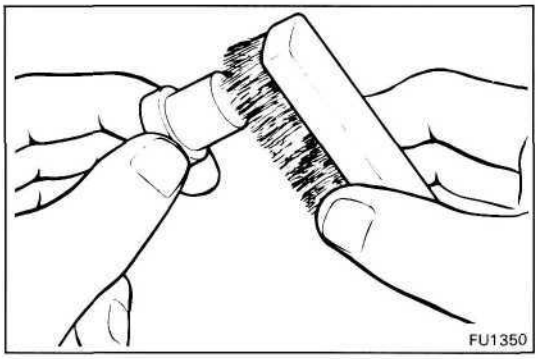

(c) Using a brass brush, remove the carbon from the exterior of the nozzle body (except lapped surface).

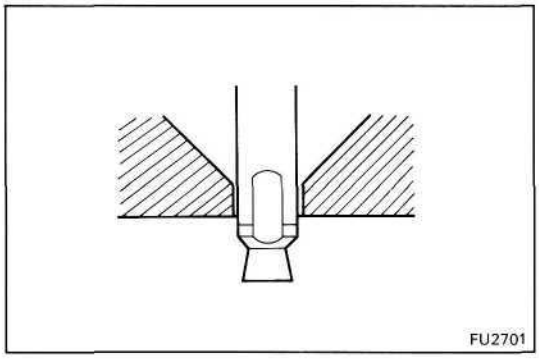

(d) Check the seat of the nozzle body for burns or corrosion.

(e) Check the nozzle needle tip for damage or corrosion.

If any of these conditions are present, replace the nozzle assembly.

2. INSPECT NOZZLE ASSEMBLY

(a) Wash the nozzle in clean diesel fuel.

HINT: Do not touch the nozzle mating surfaces with your fingers.

(b) Tilt the nozzle body about 60 degrees and pull the needle out about one third of its length.

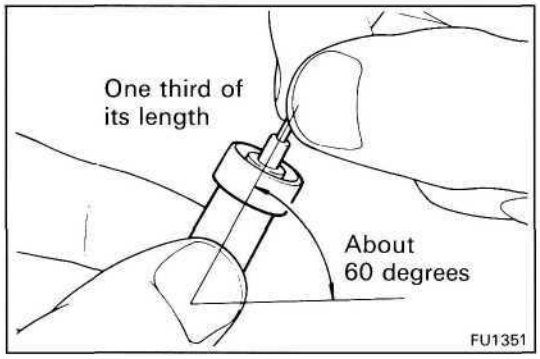

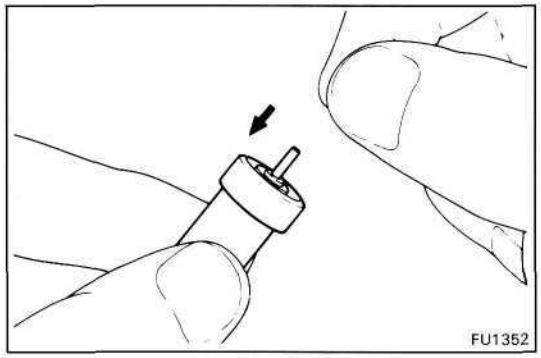

(c) When released, the needle should sink down into the body vent smoothly by its own weight.

(d) Repeat this test, rotating the needle slightly each time.

If the needle does not sink freely, replace the nozzle assembly.

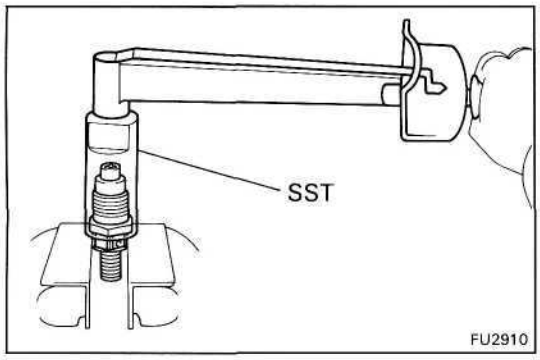

ASSEMBLY OF INJECTION NOZZLES

(See page FU-12)

1. ASSEMBLE INJECTION NOZZLE HOLDERS

(a) Assemble the nozzle holder retaining nut, the nozzle assembly, distance piece, pressure pin, pressure spring, adjusting shim and nozzle holder body, and finger tighten the retaining nut.

(b) Using SST, tighten the retaining nut.

SST 09268-64010

Torque: 375 kg-cm (27 ft-lb, 37 N·m)

NOTICE: Over torquing could cause nozzle deformation and needle adhesion or other defects.

2. PERFORM PRESSURE AND SPRAY PATTERN TEST (See pages FU-10, 11)

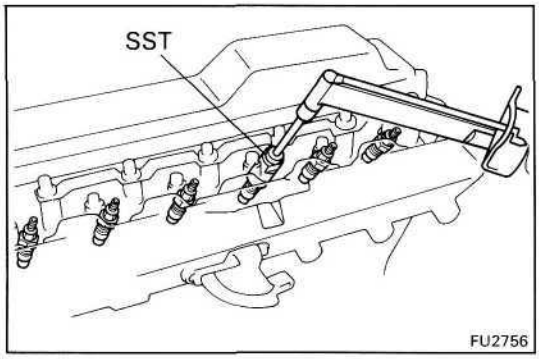

INSTALLATION OF INJECTION NOZZLES

(See page FU-9)

1. INSTALL INJECTION NOZZLES

(a) Place new gaskets and the nozzle seats into the injection nozzle holes of the cylinder head.

(b) Using SST, install the injection nozzles.

SST 09268-64010

Torque: 650 kg-cm (47 ft-lb, 64 N·m)

NOTICE:

- **Over torquing could cause nozzle deformation and needle adhesion or other defects.**
- **When installing the injection nozzle, never torque the nozzle holder body. Torque the retaining nut section.**

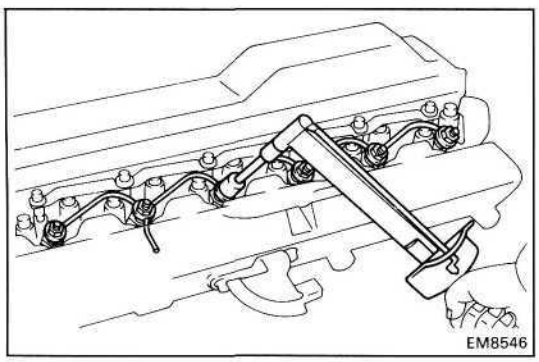

2. INSTALL NOZZLE LEAKAGE PIPE

(a) Install new gaskets and the leakage pipe with the nuts.

Torque: 300 kg-cm (22 ft-lb, 29 N·m)

(b) Connect the fuel hose to the return pipe.

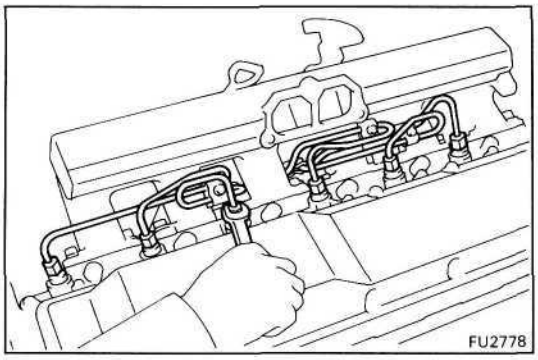

3. INSTALL INJECTION PIPES

(a) Place the two clamps on the intake manifold.

(b) Connect the injection pipes to injection nozzle.

Torque: 150 kg-cm (11 ft-lb, 15 N·m)

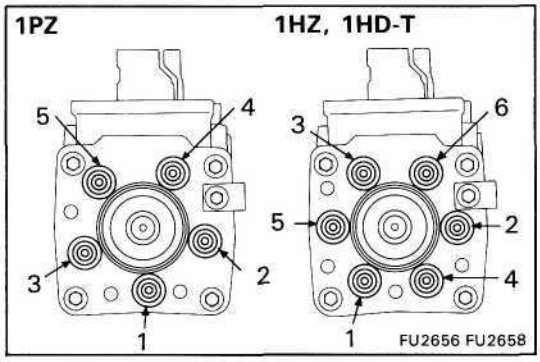

(c) Connect the injection pipes to injection pump.

Torque: 150 kg-cm (11 ft-lb, 15 N·m)

(d) Secure the injection pipes with clamps and bolts.

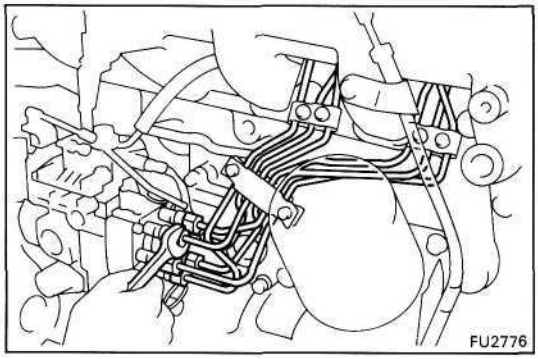

4. INSTALL INTAKE PIPE
(See step 3 on page EM-38)

5. START ENGINE AND CHECK FOR FUEL LEAKS

INJECTION PUMP

REMOVAL OF INJECTION PUMP

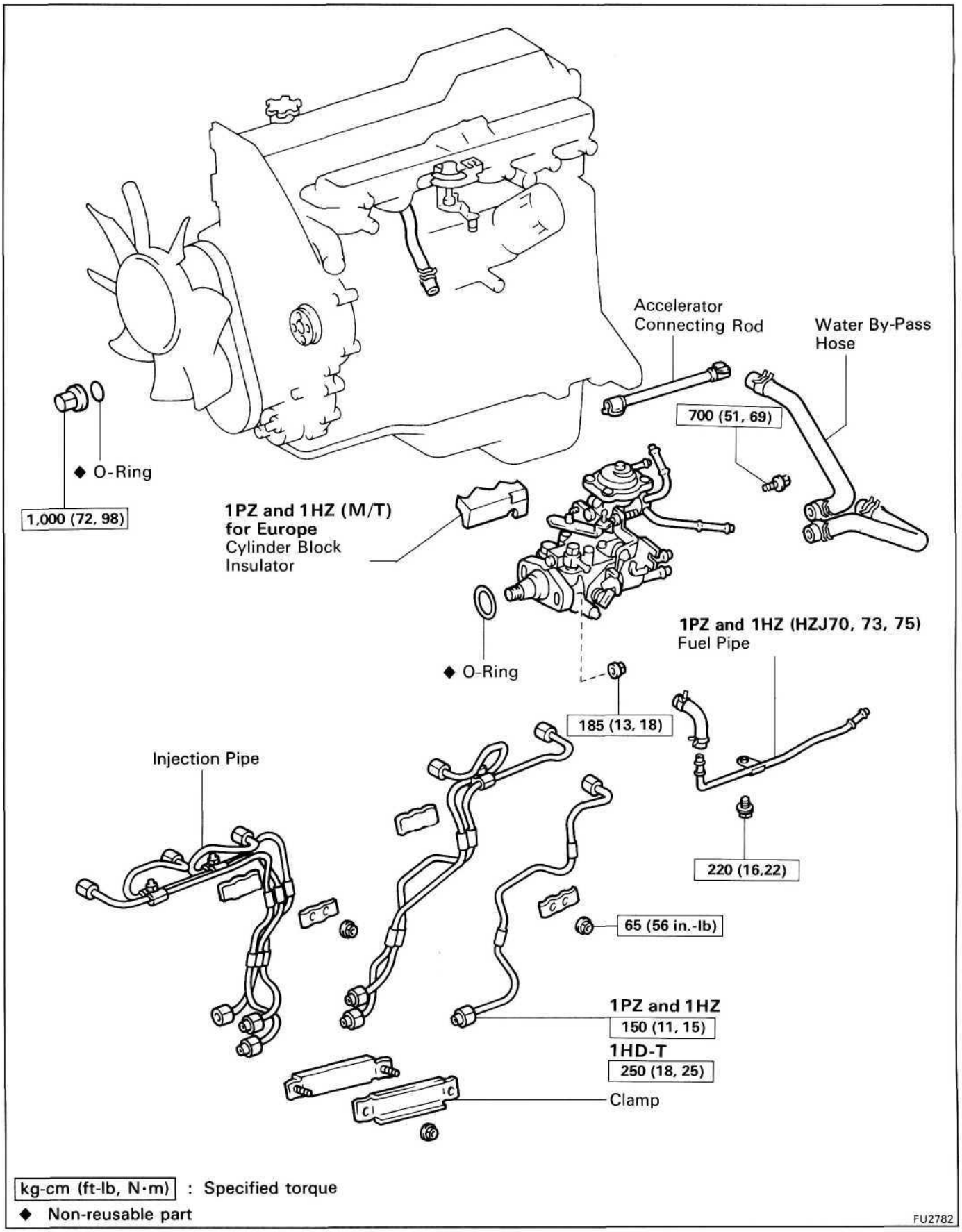

1. **(w/ACSD)**
   DRAIN COOLANT (See page CO-5)

2. **REMOVE TIMING BELT**
   (See steps 1 to 3 on pages EM-33 to 34)

3. **REMOVE NO.2 CAMSHAFT TIMING PULLEY**
   (See step 5 on pages EM-34)

4. **DISCONNECT ACCELERATOR CONNECTING ROD**

5. **(A/T)**
   DISCONNECT THROTTLE CABLE

6. **(w/ A/C)**
   DISCONNECT A/C IDLE-UP VACUUM HOSE

7. **(w/ ACSD)**
   DISCONNECT WATER BY-PASS HOSES FROM THERMO WAX

8. **DISCONNECT INJECTION PUMP CONNECTOR**

9. **DISCONNECT FUEL HOSES FROM INJECTION PUMP**

10. **(1HD-T)**
    DISCONNECT BOOST COMPENSATOR HOSE

11. **(w/PCS)**
    DISCONNECT PCS VACUUM HOSE

12. **(w/BACS)**
    DISCONNECT BACS VACUUM HOSE

13. **REMOVE INJECTION PIPES**
    (See step 2 on page FU-9)

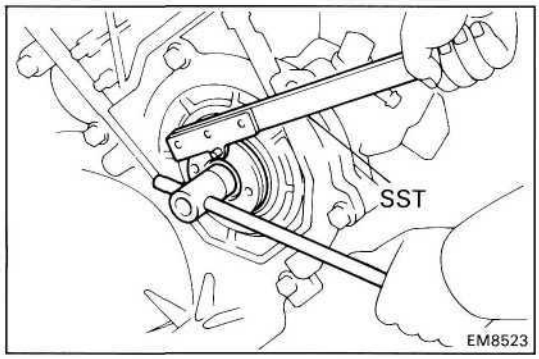

14. **REMOVE INJECTION PUMP**

    (a) Using SST, remove the injection pump drive gear set nut.

    SST 09330-00021

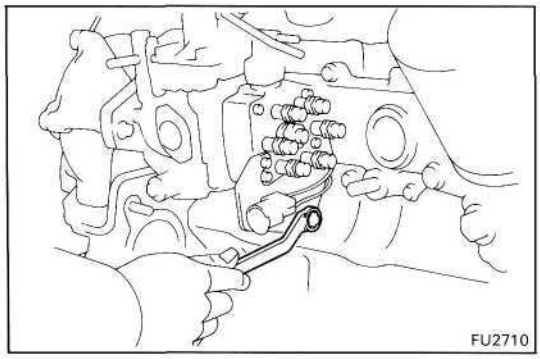

    (b) Remove the bolt holding the injection pump to pump stay.

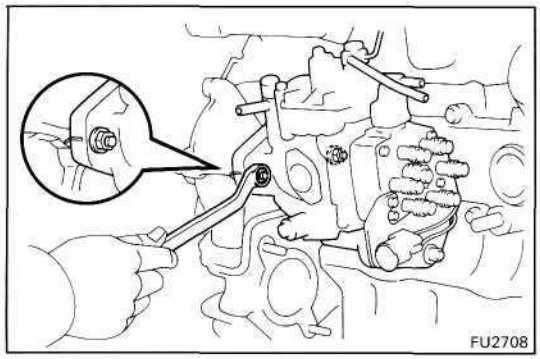

(c) Before removing the injection pump, check if the period lines are aligned.

If not, place new matchmarks for reinstallation.

(d) Remove the two nuts holding the injection pump to the timing gear case.

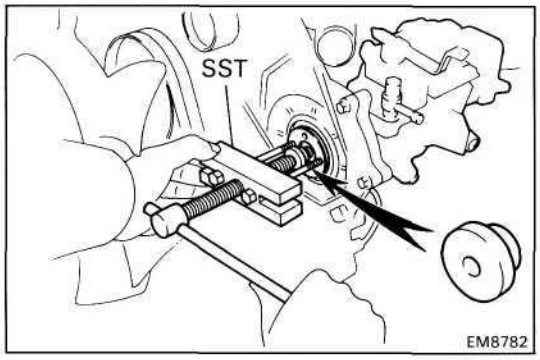

(e) Using SST, remove the injection pump.

SST 09213-60017 (09213-00020, 09213-00030, 09213-00060) and 09950-20017

NOTICE:

- **Tighten the two bolts more than 8 mm (0.31 in.).**
- **Set SST so that it is balanced.**
- **Do not hold or carry the injection pump by the adjusting lever.**
- **Do not put the injection pump (with HAC, or for the 1 HD-T) at an angle more than 45° from the horizontal.**

(f) Remove the cylinder block insulator (1 PZ and 1 HZ (M/T) for Europe).

(g) Remove the O-ring from the injection pump.

COMPONENTS

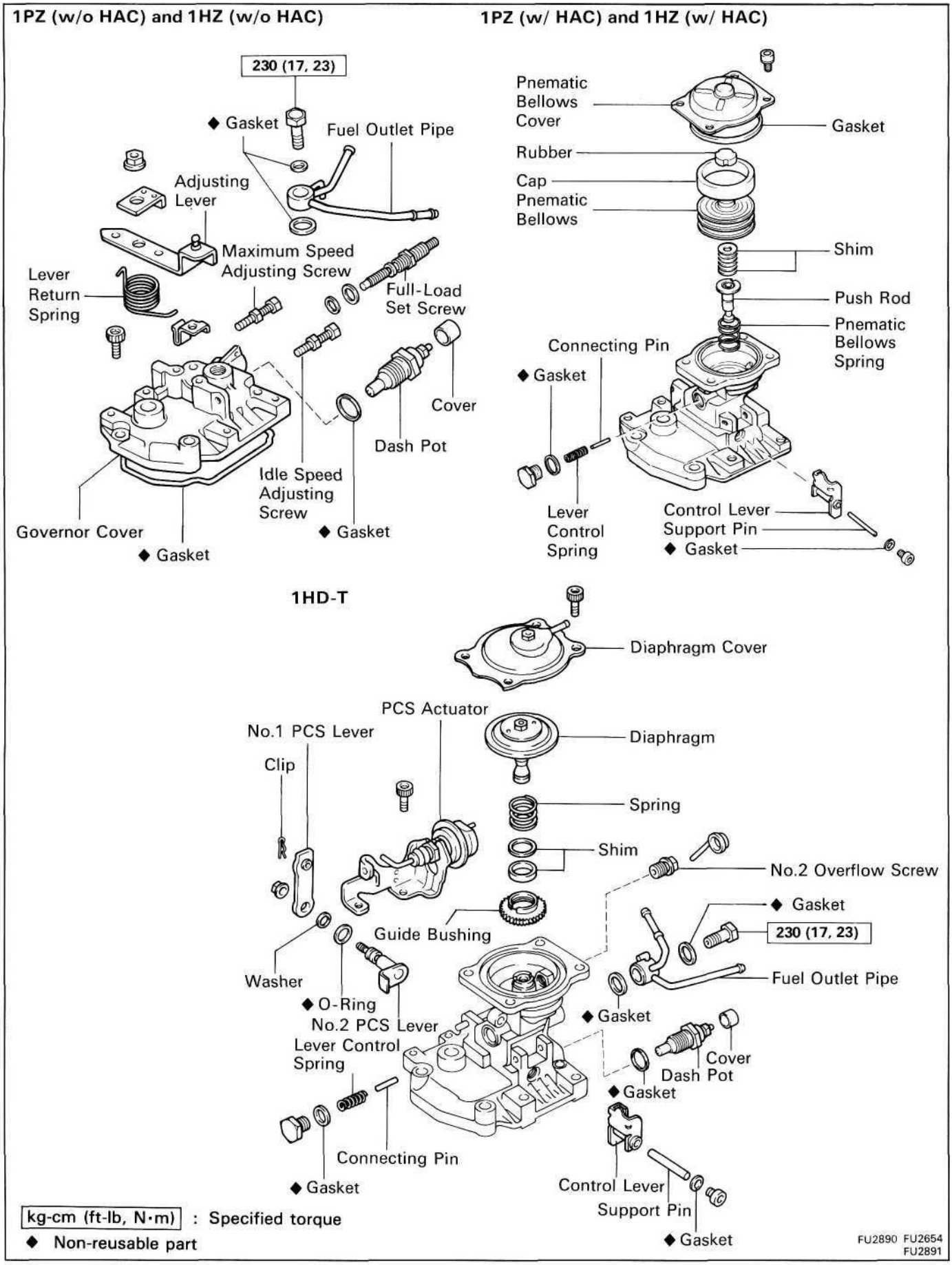
1PZ (w/o HAC) and 1HZ (w/o HAC)
230 (17, 23)
◆ Gasket
Fuel Outlet Pipe
Adjusting Lever
Maximum Speed Adjusting Screw
Lever Return Spring
Full-Load Set Screw
Cover
Dash Pot
Idle Speed Adjusting Screw
Governor Cover
◆ Gasket
◆ Gasket
1PZ (w/ HAC) and 1HZ (w/ HAC)
Pnematic Bellows Cover
Gasket
Rubber
Cap
Pnematic Bellows
Shim
Push Rod
Pnematic Bellows Spring
Connecting Pin
◆ Gasket
Lever Control Spring
Control Lever Support Pin
◆ Gasket
1HD-T
Diaphragm Cover
PCS Actuator
No.1 PCS Lever
Clip
Diaphragm
Spring
Shim
No.2 Overflow Screw
◆ Gasket
230 (17, 23)
Guide Bushing
Fuel Outlet Pipe
Washer
◆ O-Ring
No.2 PCS Lever
Lever Control Spring
◆ Gasket
Cover
Dash Pot
◆ Gasket
Connecting Pin
◆ Gasket
Control Lever Support Pin
◆ Gasket
kg-cm (ft-lb, N·m) : Specified torque
◆ Non-reusable part
FU2890 FU2654 FU2891

COMPONENTS (Cont'd)

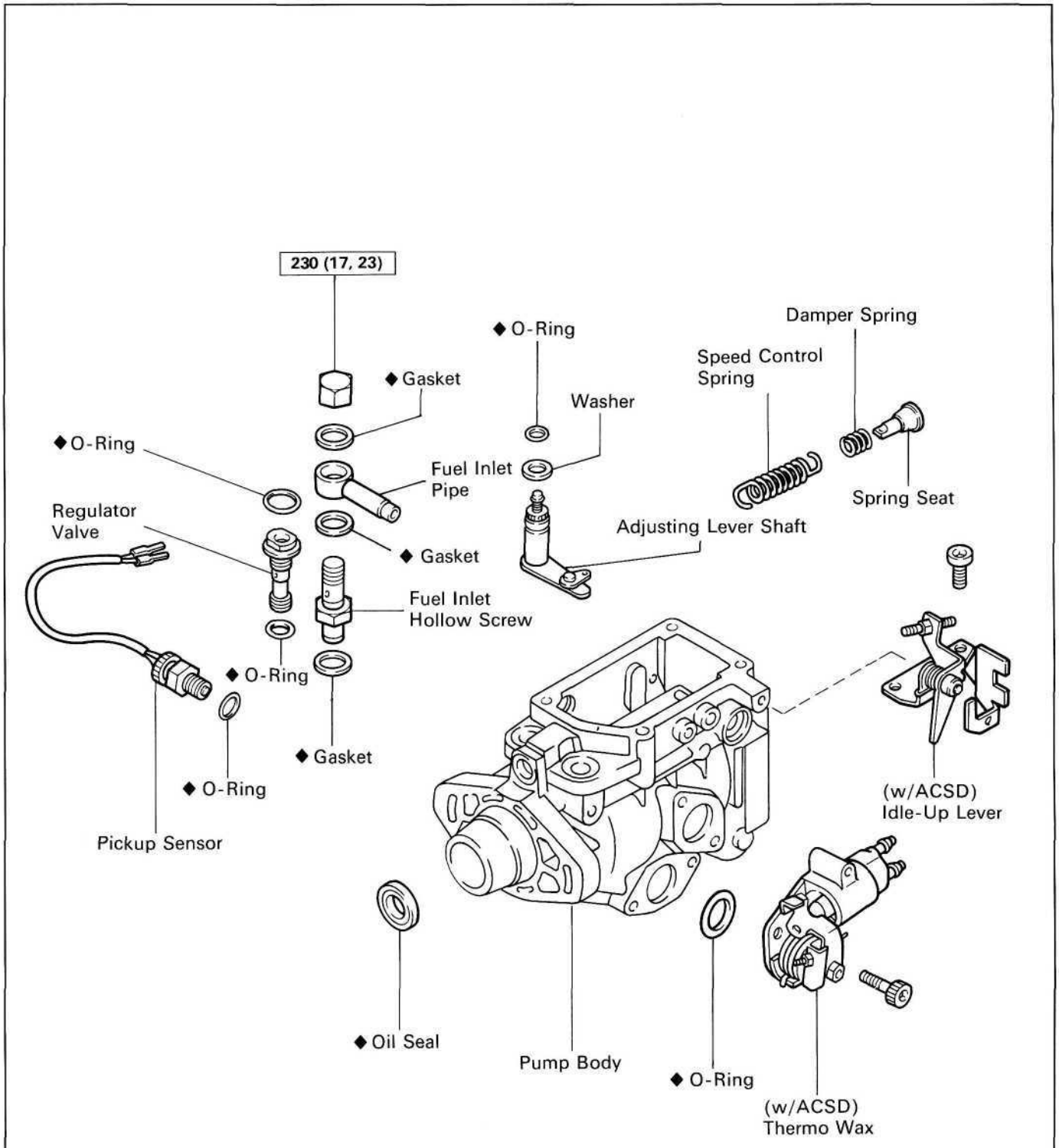

kg-cm (ft-lb, N·m) : Specified torque

◆ Non-reusable part

FU2773

COMPONENTS (Cont'd)

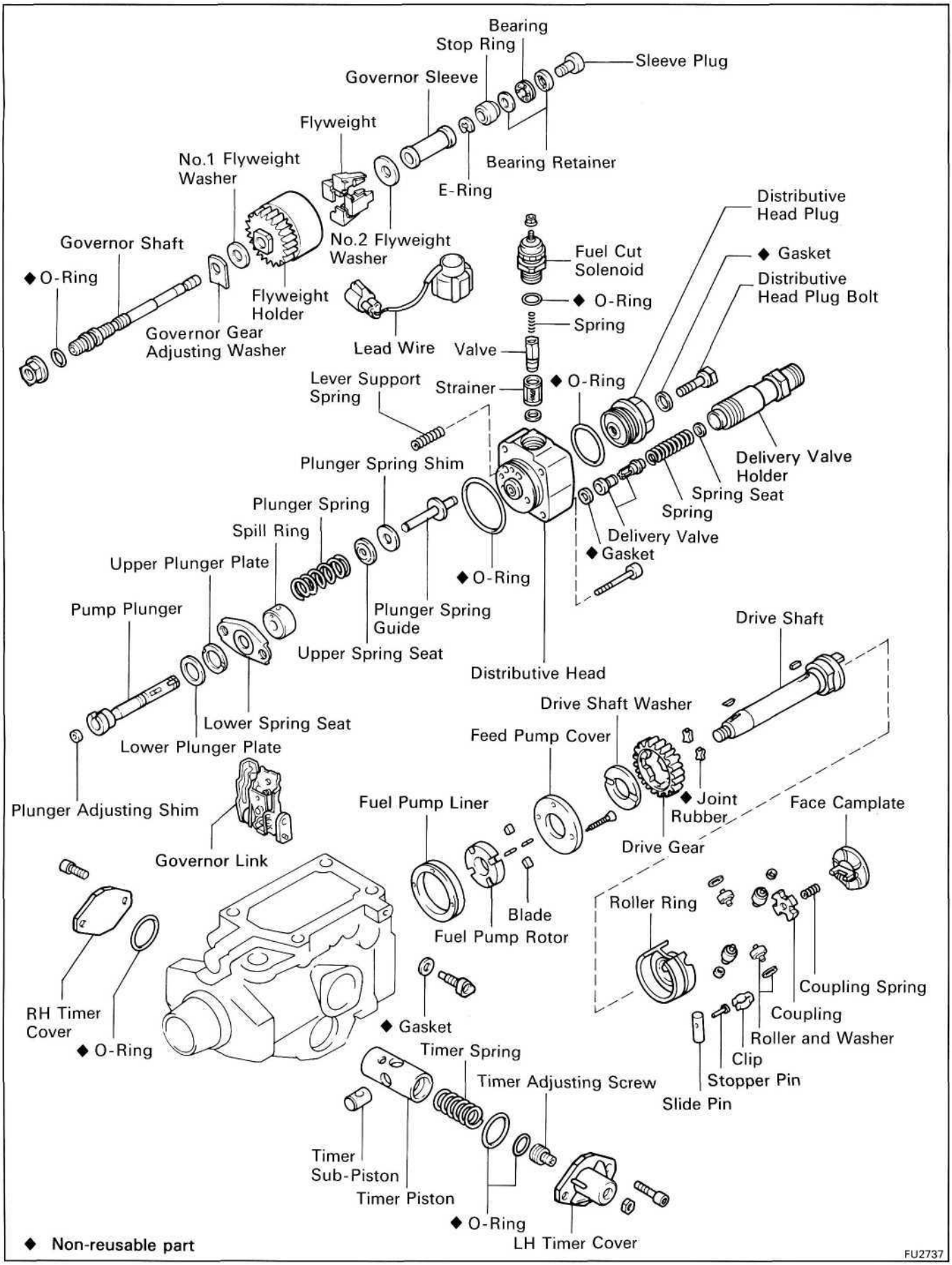

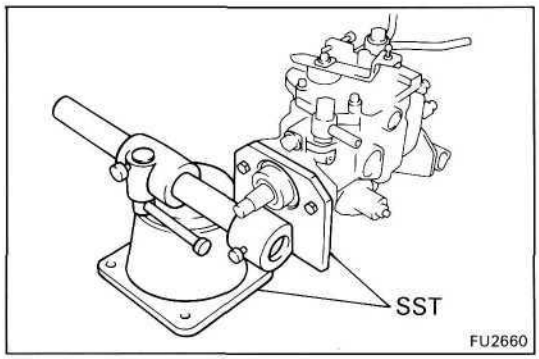

DISASSEMBLY OF INJECTION PUMP

(See pages FU-30, 31 and 32)

1. MOUNT PUMP ASSEMBLY TO SST (STAND)

SST 09241 -76022 and 09245-54010

2. REMOVE SET KEY OF DRIVE PULLEY FROM DRIVE SHAFT

3. (w/ A/C)
REMOVE IDLE-UP ACTUATOR

4. REMOVE TWO FUEL PIPES

Place the matchmarks on the fuel inlet pipe and governor cover.

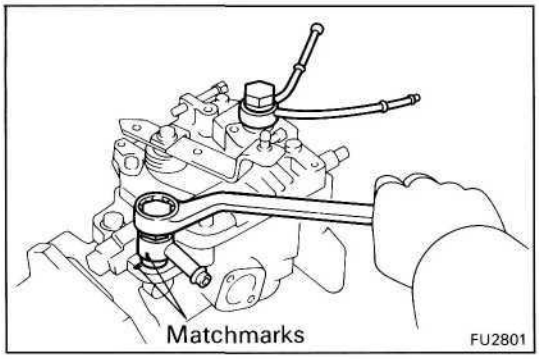

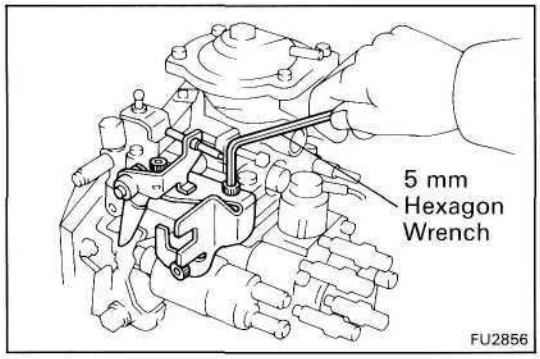

5. (w/ ACSD)
REMOVE IDLE-UP LEVER

Using a 5 mm hexagon wrench, remove the three bolts and idle-up lever.

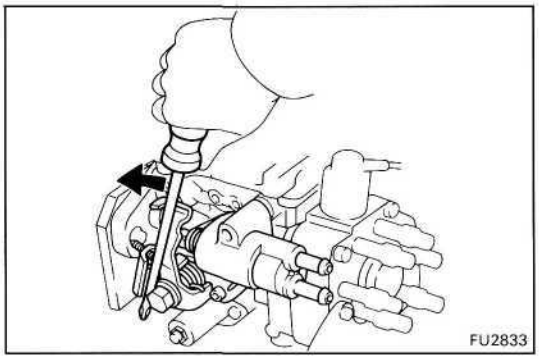

6. (w/ ACSD)
REMOVE THERMO WAX

(a) Using a screwdriver, turn the cold starting lever counterclockwise approx. 20°.

(b) Put a metal plate (thickness of 3.5-7.5 mm) (0.138-0.295 in.) between the cold starting lever and thermo wax plunger.

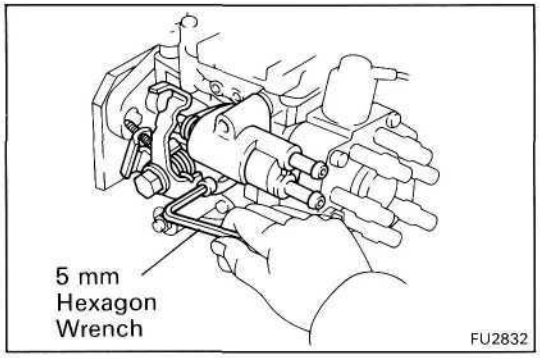

(c) Using a 5 mm hexagon wrench, remove the two bolts, thermo wax and O-ring.

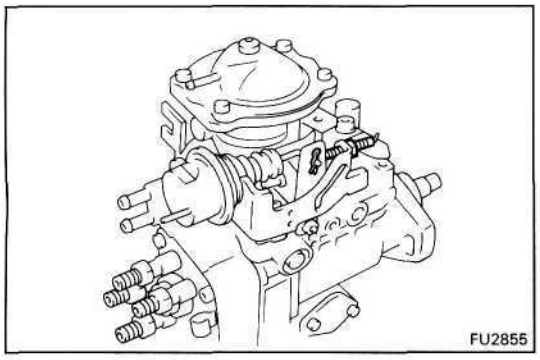

7. (w/ PCS)
REMOVE PCS ACTUATOR

(a) Remove the PCS adjusting screw.

(b) Remove the clip.

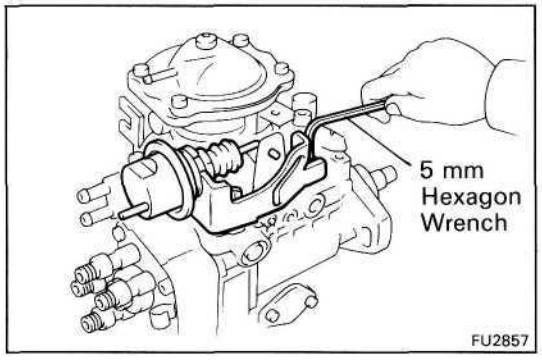

(c) Using a 5 mm hexagon wrench, remove the two bolts and PCS actuator assembly.

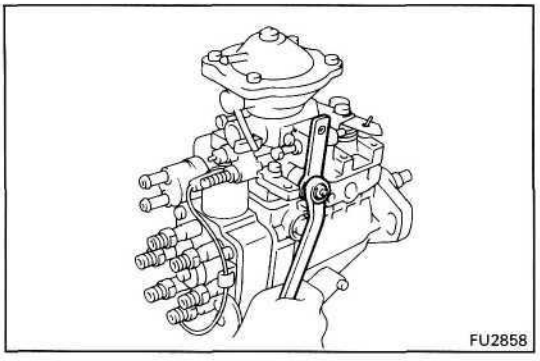

8. (w/ PCS)
REMOVE NO.1 PCS LEVER

Remove the nut and No.1 PCS lever.

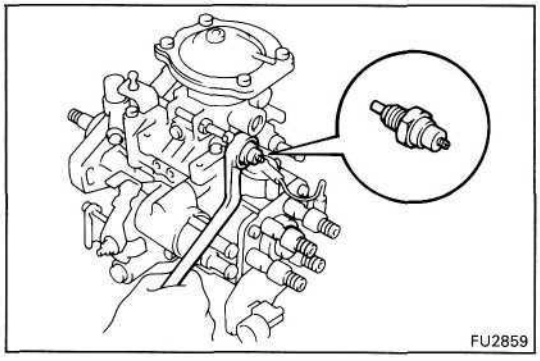

9. (w/ Dash Pot)
REMOVE DASH POT

Remove the dash pot and gasket.

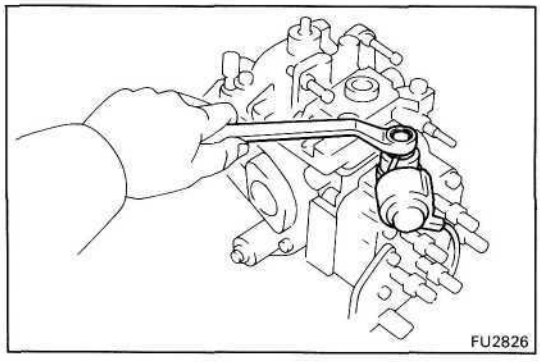

10. REMOVE FUEL CUT SOLENOID

(a) Disconnect the lead wire connector from the bracket.

(b) Disconnect the dust cover from the fuel cut solenoid.

(c) Remove the nut, lead wire and dust cover.

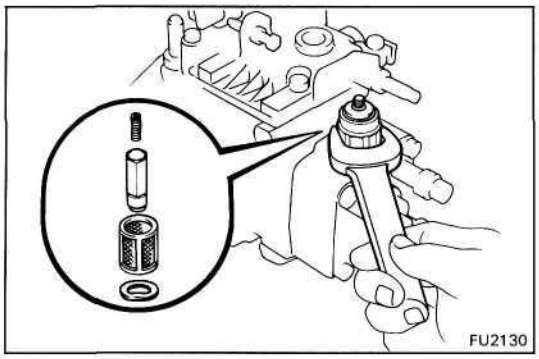

(d) Remove the fuel cut solenoid, O-ring, spring, valve, strainer and wave washer.

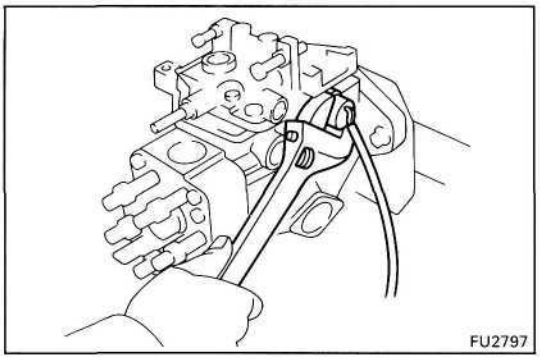

11. (w/TACHOMETER)
REMOVE PICKUP SENSOR

Remove the pickup sensor and O-ring.

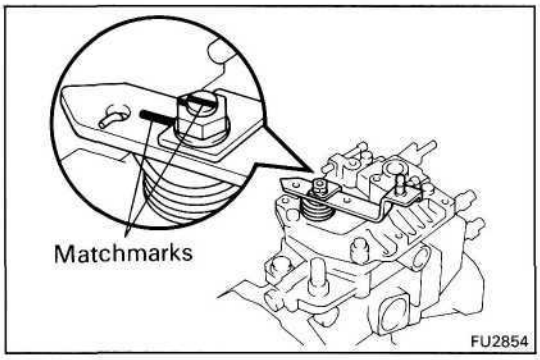

12. REMOVE ADJUSTING LEVER

(a) Place the matchmarks on adjusting lever and shaft.

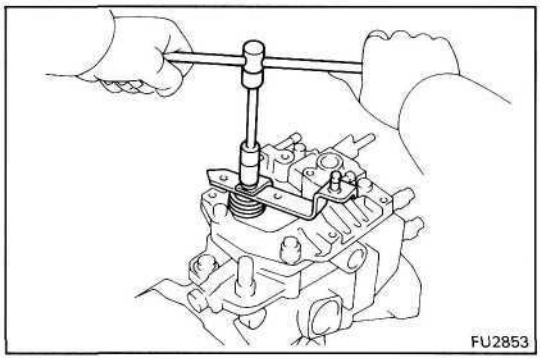

(b) Remove the nut, return spring guide, adjusting lever and return spring.

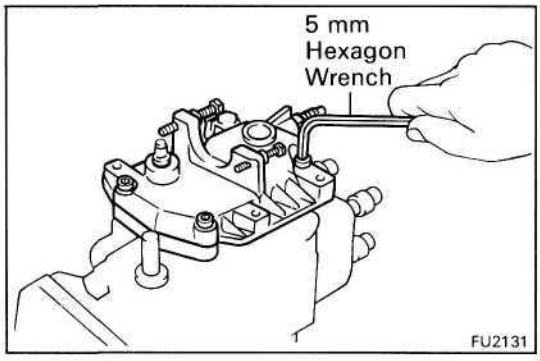

13. REMOVE GOVERNOR COVER

(a) (w/HACand 1HD-T)
Remove the idle speed adjusting screw.

(b) Using a 5 mm hexagon wrench, remove the four bolts.

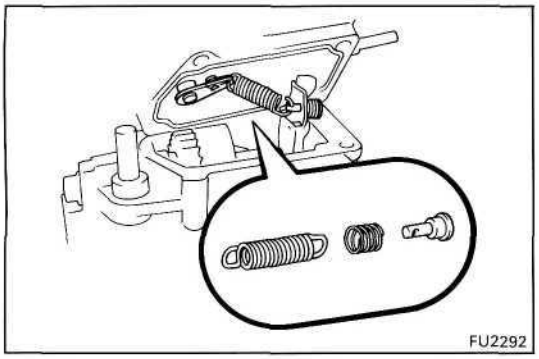

(c) Disconnect the speed control spring from the spring seat, and remove the spring seat, damper spring, speed control spring, the governor cover and adjusting lever shaft assembly and gasket.

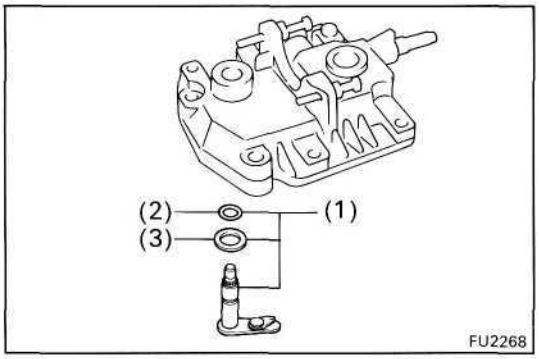

14. REMOVE GOVERNOR ADJUSTING LEVER SHAFT FROM GOVERNOR COVER

Remove the following parts from the governor cover.

(1) Adjusting lever shaft, O-ring and washer assembly
(2) O-ring
(3) Washer

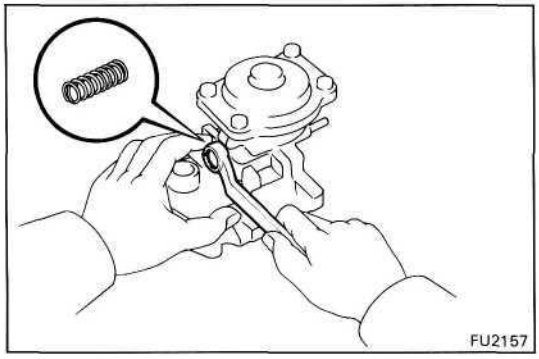

15. (1PZ(w/HAC) and1HZ(w/HAC)) DISASSEMBLE HIGH ALTITUDE COMPENSATOR

A. Remove lever control spring

Remove the bolt, gasket and lever control spring.

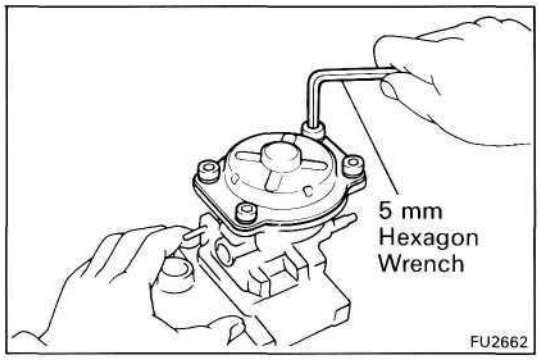

B. Remove pneumatic bellows

(a) Using a 5 mm hexagon wrench, remove the four bolts.

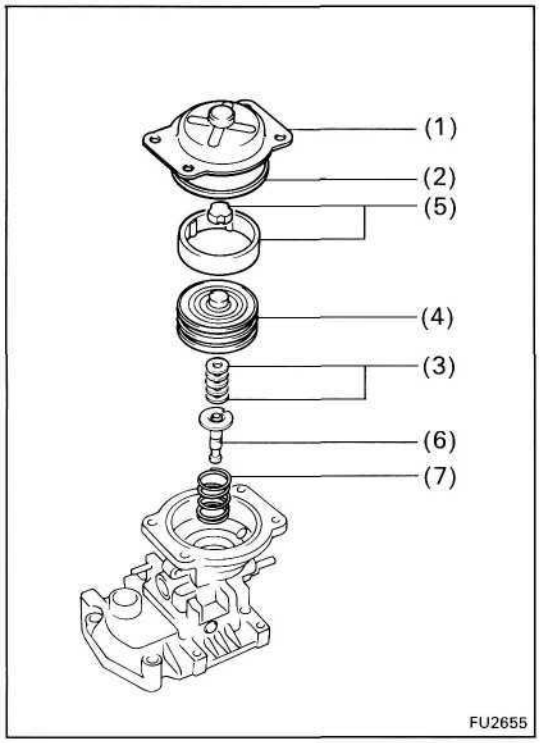

(b) Remove the following parts:
(1) Pneumatic bellows cover
(2) Gasket
(3) Shims

NOTICE: Note the number of the shims.

(4) Pneumatic bellows
(5) Two rubber caps
(6) Push rod
(7) Pneumatic bellows spring

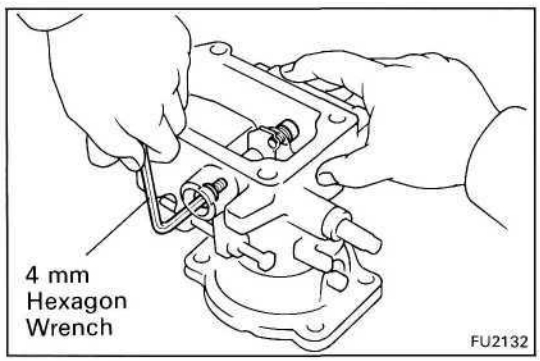

C. Remove control lever

(a) Using a 4 mm hexagon wrench, remove the two bolts and gaskets.

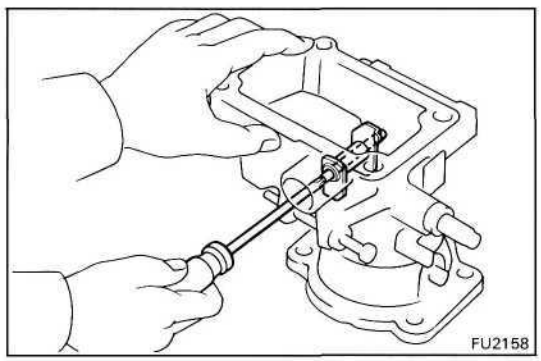

(b) Using a small screwdriver, push out the support pin and remove the control lever.

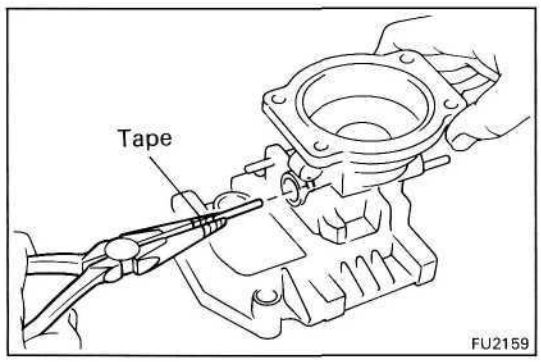

(c) Using needle nose pliers, remove the connecting pin.

NOTICE: Be careful not to damage the connecting. Tape the tip of the pliers.

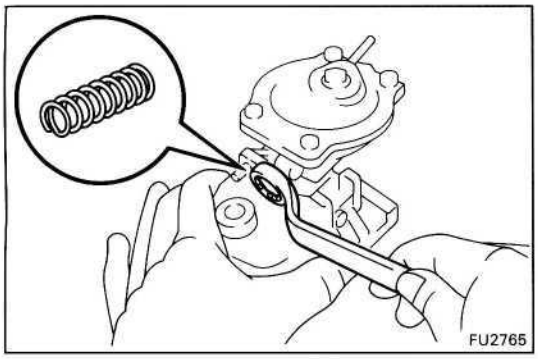

16. (1HD-T)
DISASSEMBLE BOOST COMPENSATOR

A. Remove lever control spring

Remove the bolt, gasket and lever control spring.

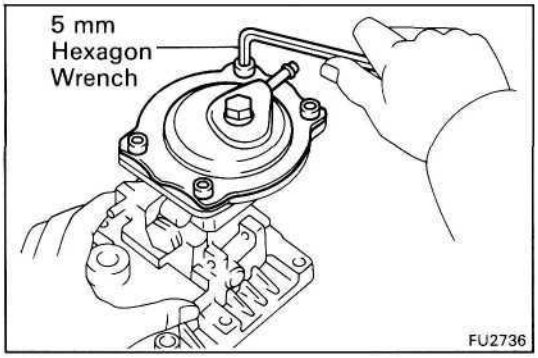

B. Remove boost compensator diaphragm

(a) Using a 5 mm hexagon wrench, remove the four bolts.

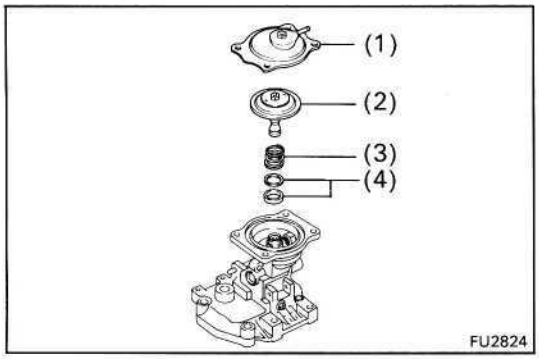

(b) Remove the following parts:
(1) Diaphragm cover
(2) Diaphragm
(3) Spring
(4) Boost compensator shim

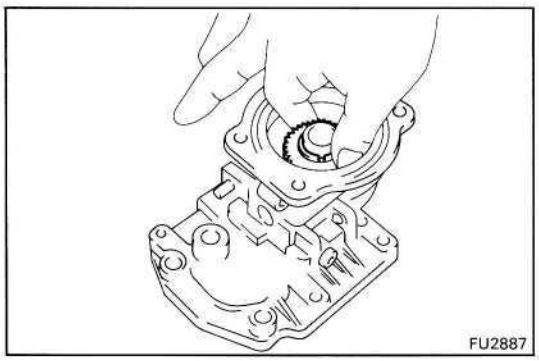

C. Remove guide bushing

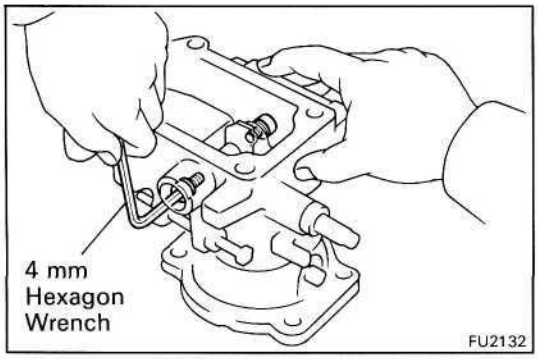

D. Remove control lever

(a) Using a 4 mm hexagon wrench, remove the two bolts and gaskets.

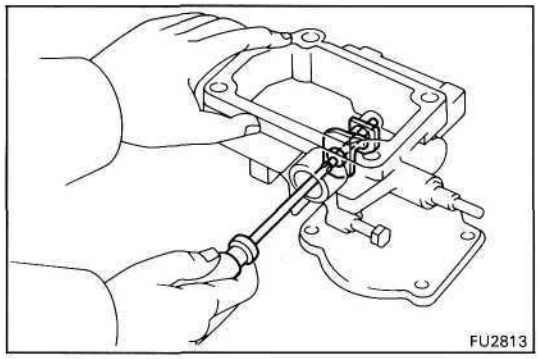

(b) Using a small screwdriver, push out the support pin and remove the control lever.

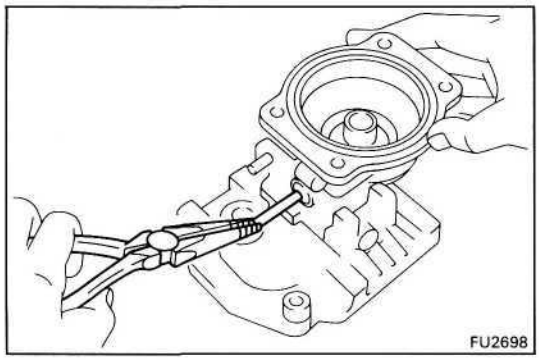

(c) Using needle nose pliers, remove the connecting pin.

NOTICE: Be careful not to damage the connecting pin. Tape the tip of the pliers.

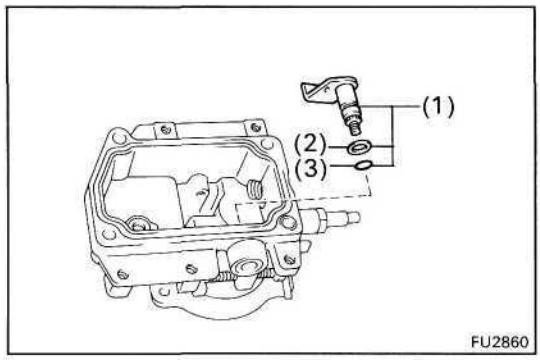

E. Remove ISlo.2 PCS lever

Remove the following pars from the the governor cover.

(1) No.2 lever, O-ring and washer assembly
(2) O-ring
(3) Washer

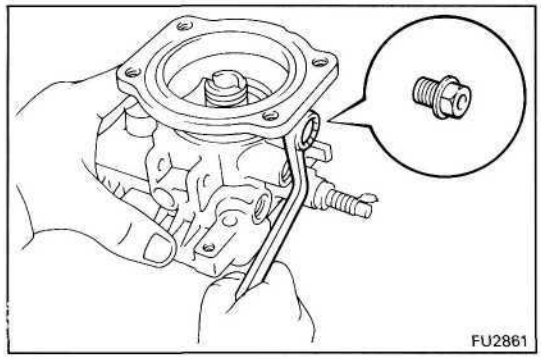

F. Remove No.2 overflow screw

Remove the cover and No.2 overflow screw.

17. CHECK FLYWEIGHT HOLDER THRUST CLEARANCE (See step 20 on page FU-58)

Thrust clearance: 0.15 - 0.35 mm (0.0059-0.0138 in.)

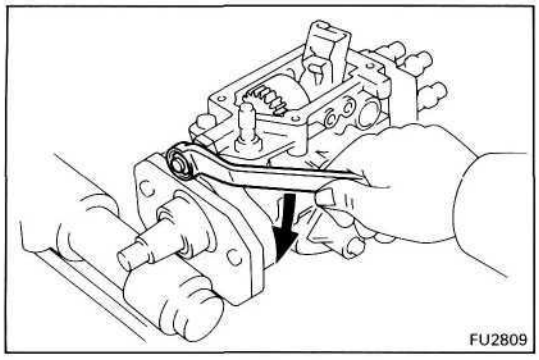

18. REMOVE GOVERNOR SHAFT AND FLYWEIGHT HOLDER

(a) Remove the governor shaft lock nut by turning it clockwise.

NOTICE: The governor shaft and lock nut have LH threads.

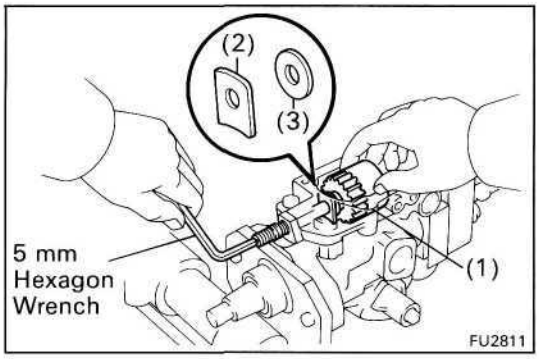

(b) Using a 5 mm hexagon wrench, remove the governor shaft clockwise, and remove the following part:
(1) Flyweight holder assembly
(2) No.1 flyweight washer
(3) Governor gear adjusting washer

HINT: Be careful not to drop the two washers into the pump housing.

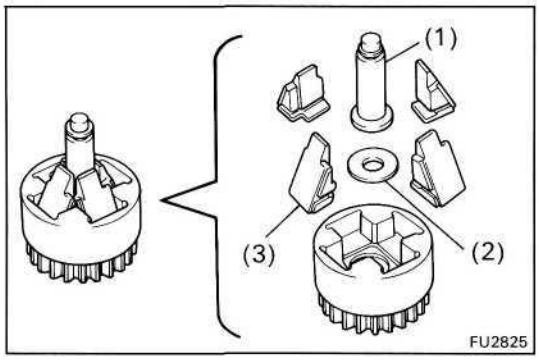

(c) Remove the following parts from the flyweight holder.
(1) Governor sleeve
(2) No.2 flyweight washer
(3) Four flyweights

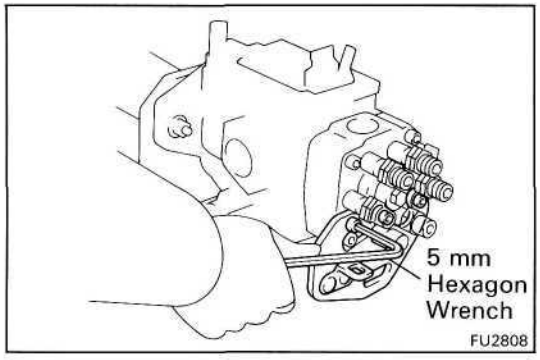

19. REMOVE INJECTION PUMP STAY

Using a 5 mm hexagon wrench, remove the three bolts and stay.

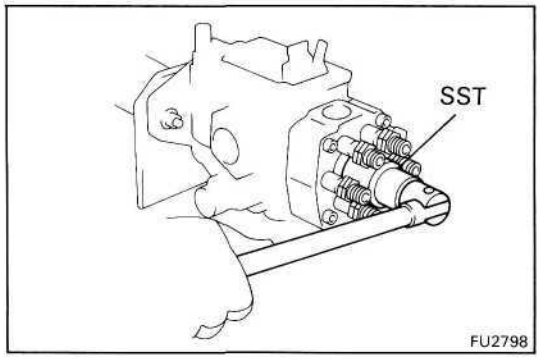

20. REMOVE DISTRIBUTIVE HEAD PLUG

Using SST, remove the distributive head plug.

SST 09260-54012 (09262-54010)

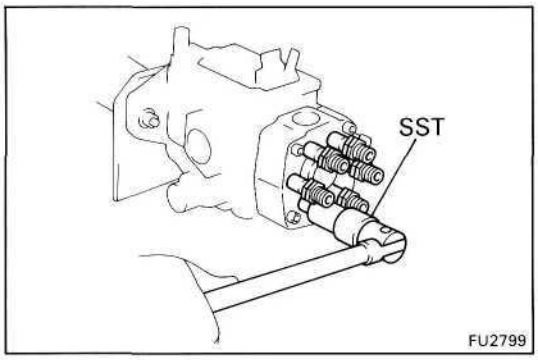

21. REMOVE DELIVERY VALVE HOLDERS

(a) Using SST, remove the delivery valve holders, springs and spring seats.

SST 09260-5401 2 (09269-54020)

(b) Remove the delivery valves and gaskets.

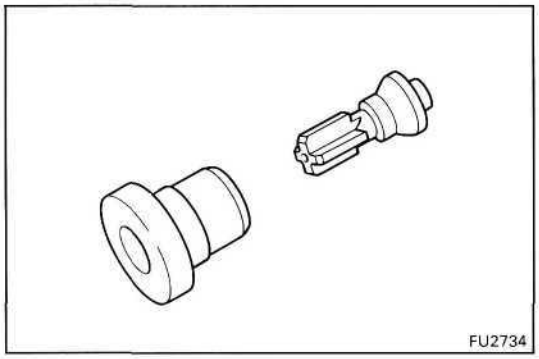

NOTICE: Do not touch the sliding surfaces of the delivery valve with your hand.

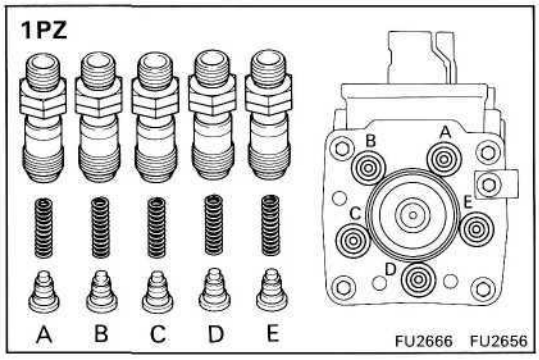

HINT: Arrange the delivery valves, springs, spring seats and holders in order.

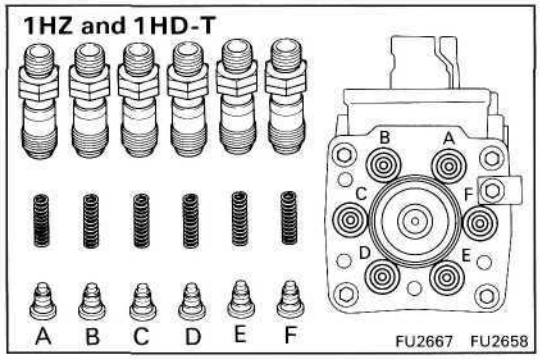

22. REMOVE DISTRIBUTIVE HEAD

(a) Using a 5 mm hexagon wrench, remove the four bolts.

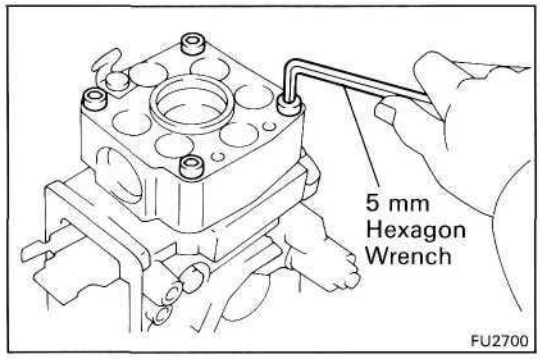

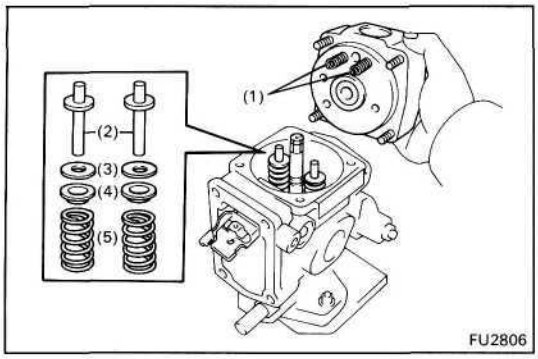

(b) Remove the distributive head and following parts:
(1) Two lever support springs
(2) Two plunger spring guides
(3) Two plunger spring shims
(4) Two upper spring seats
(5) Two plunger springs

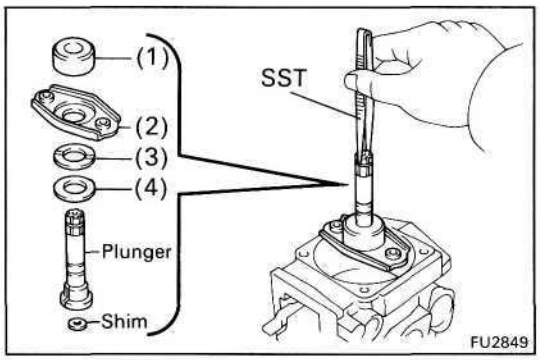

23. REMOVE PUMP PLUNGER

Using SST, remove the pump plunger and plunger adjusting shim together with the following parts:
(1) Spill ring
(2) Lower spring seat
(3) Upper plunger plate
(4) Lower plunger plate

SST 09260-54012 (09269-54030)

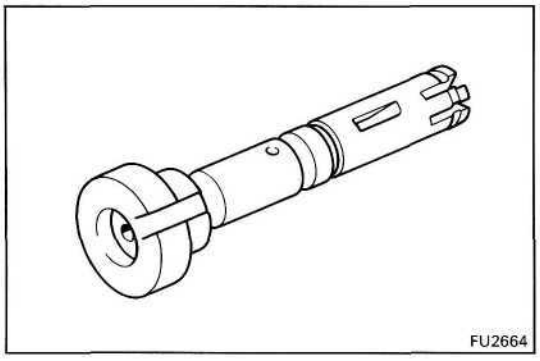

NOTICE: Do not touch the sliding surfaces of the pump plunger with your hand.

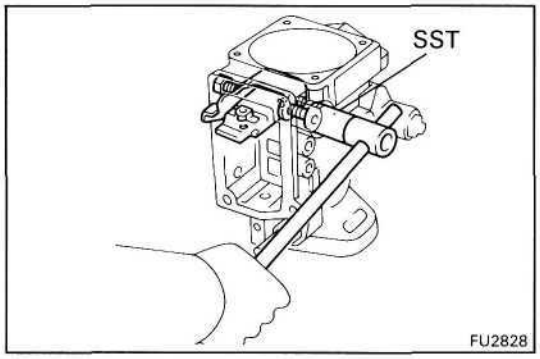

24. REMOVE GOVERNOR LINK

Using SST, remove the two support bolts, gaskets and governor link.

SST 09260-54012 (09269-54040)

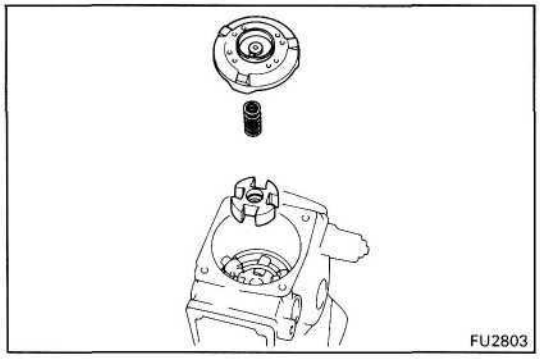

25. REMOVE FACE CAMPLATE AND COUPLING

Remove the face camplate, spring and coupling.

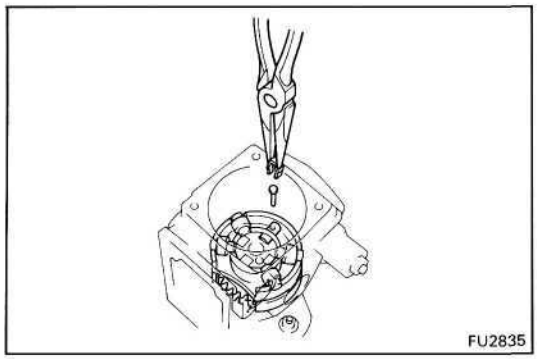

26. REMOVE ROLLER RING AND DRIVE SHAFT

(a) Remove the timer clip and stopper pin.

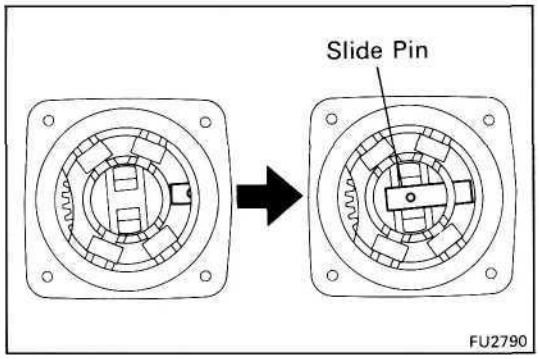

(b) Push the slide pin toward inside.

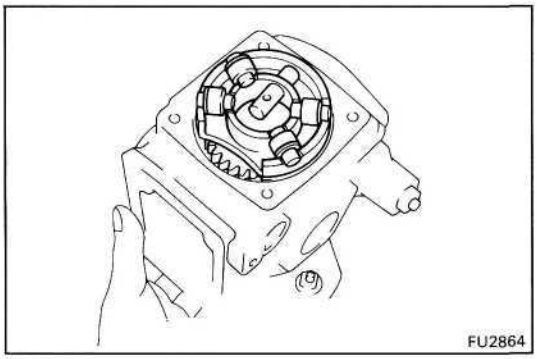

(c) (1PZ)
Push the drive shaft, and remove the roller ring, three rollers and shims assembly.

(1 HZ and 1HD-T)
Push the drive shaft, and remove the roller ring, four rollers and shims assembly.

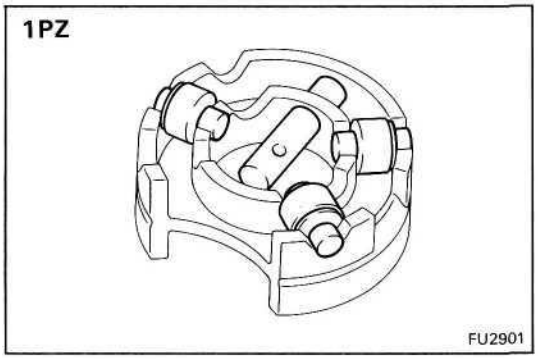

NOTICE:

- **Be careful not to drop the rollers.**
- **Do not alter the position or assembly of the rollers.**

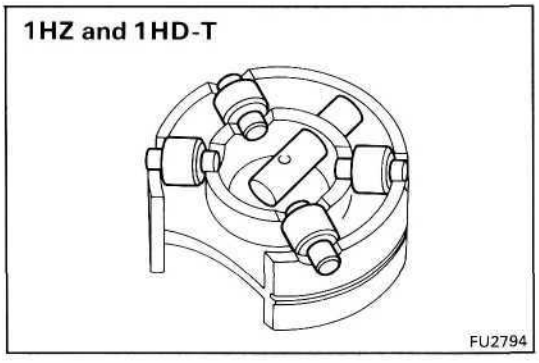

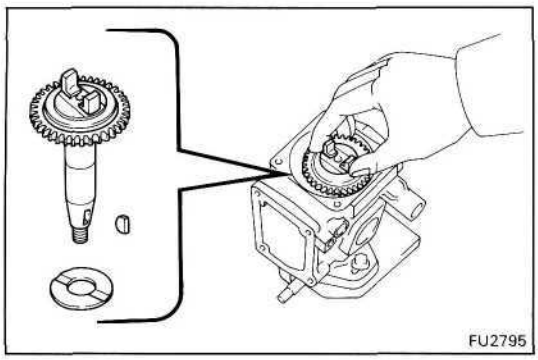

(d) Remove the drive shaft, governor drive gear, two joint rubbers assembly, set key and drive shaft washer.

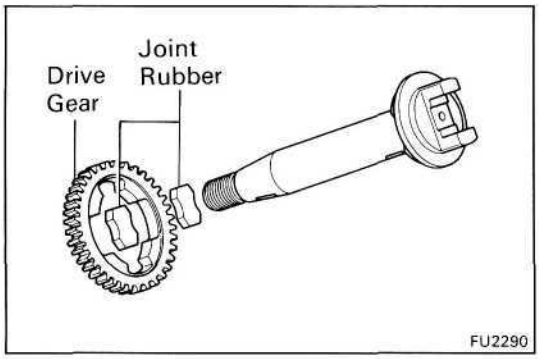

(e) Remove the drive gear and two joint rubbers from the drive shaft.

27. REMOVE TIMER

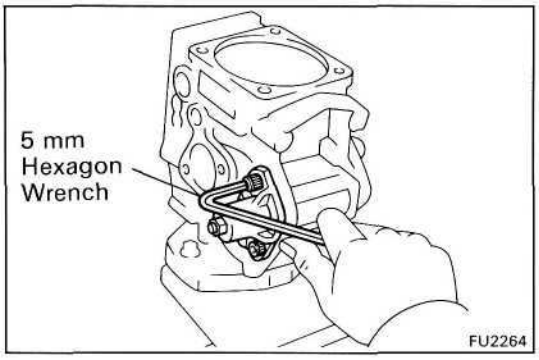

(a) Using a 5 mm hexagon wrench, remove the four bolts.

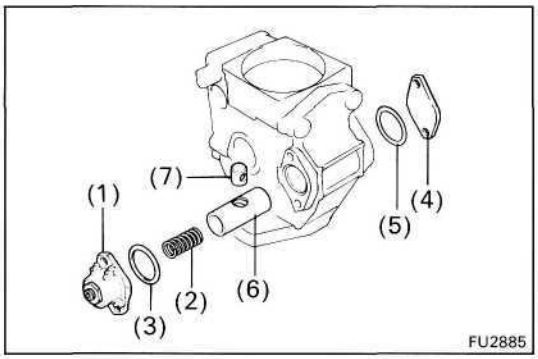

(b) Remove the following parts:
- (1) LH timer cover, timer adjusting screw and nut assembly
- (2) Spring
- (3) O-ring
- (4) RH timer cover
- (5) O-ring
- (6) Piston
- (7) Sub-piston

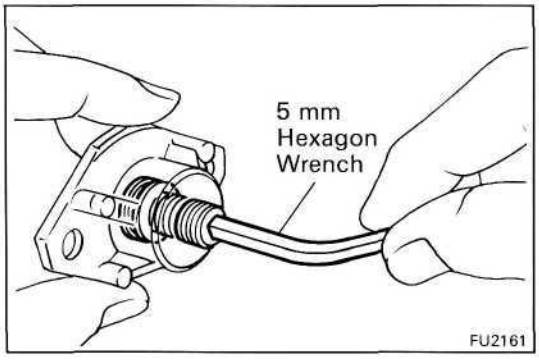

(c) Remove the nut from the LH timer cover.

(d) Using a 5 mm hexagon wrench, remove the timer adjusting screw.

(e) Remove the O-ring from the timer adjusting ring.

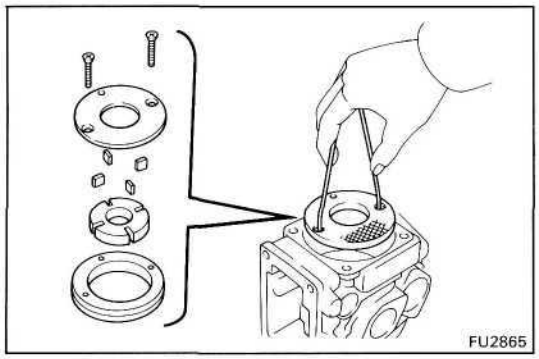

28. REMOVE FUEL FEED PUMP

(a) Remove the two screws.

(b) Using a piece of wire, remove the feed pump cover.

(c) Remove the feed pump rotor, four blades and liner.

NOTICE:

- **Be careful not to interchange the blade positions.**
- **Be careful not to damage the pump body.**

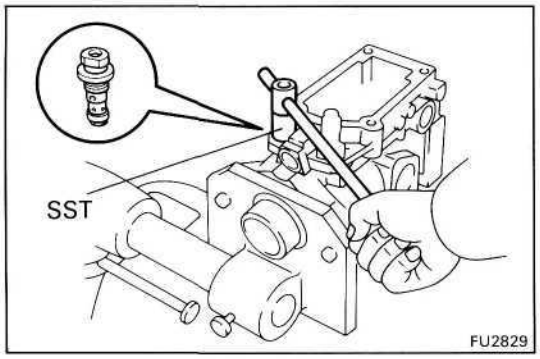

29. REMOVE REGULATOR VALVE

Using SST, remove the regulator valve and two O-rings.

SST 09260-54012 (09262-54020)

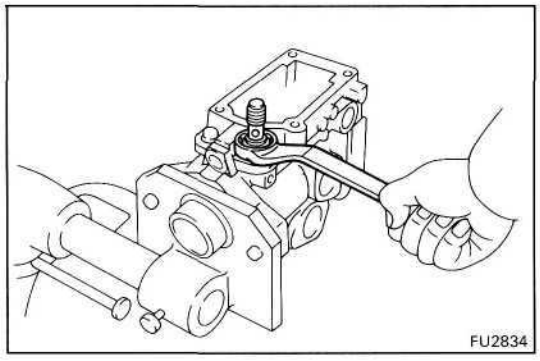

30. REMOVE FUEL INLET HOLLOW SCREW

Remove the hollow screw and gasket.

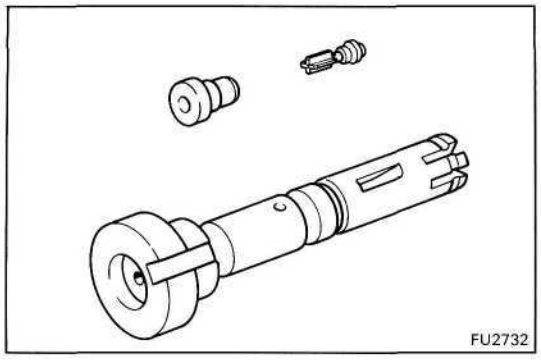

INSPECTION OF INJECTION PUMP COMPONENTS

NOTICE: Do not touch the sliding surfaces of the pump plunger and delivery valves.

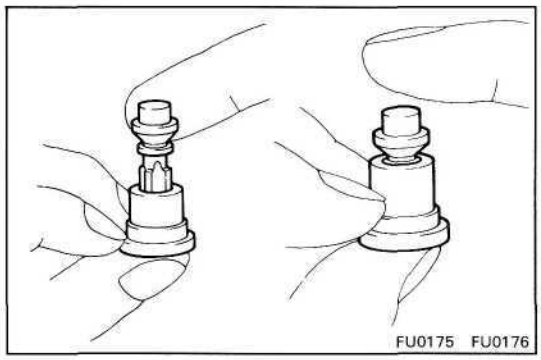

1. INSPECT DELIVERY VALVES (IPZandiHZ)

(a) Pull up the valve and close the hole at the valve seat bottom end with your thumb.
When the valve is released, it should sink down quickly and stop at the position where the relief ring closes the valve seat hole.

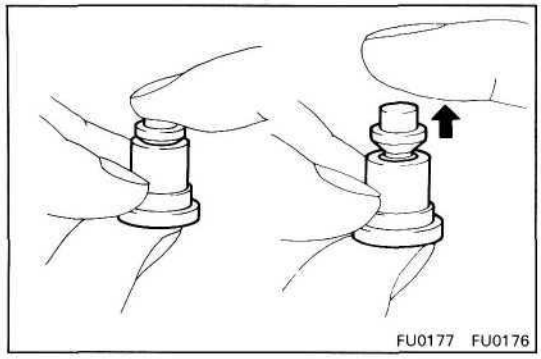

(b) Close the hole at the valve seat bottom end with your thumb.
Insert the valve into the valve seat and press down with your finger. When your finger is released, the valve should rise back to its original position.

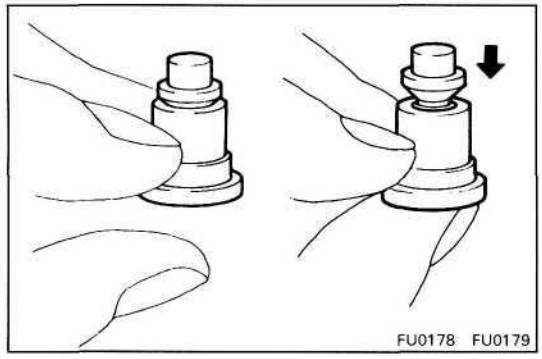

(c) Remove your thumb from the valve seat hole.
The valve should close completely by its own weight.

If operation is not as specified, replace the valve as a set.

HINT: Before using a new valve set, wash off the rust prevention compound with light oil or gasoline. Then re-wash with diesel fuel and perform the above tests.

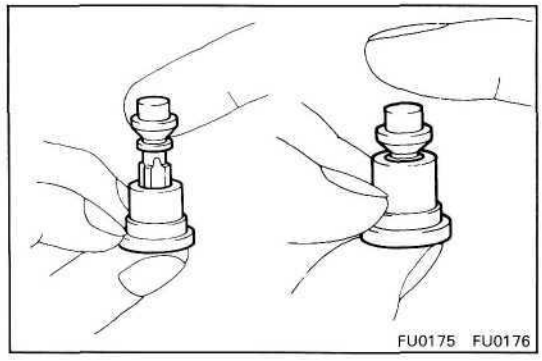

(1HD-T)

Pull up the valve. When the valve is released, it should sink down quickly.
If operation is not as specified, replace the valve as a set.

HINT: Before using a new valve set, wash off the rust prevention compound with light oil or gasoline. Then re-wash with diesel fuel and perform the above tests.

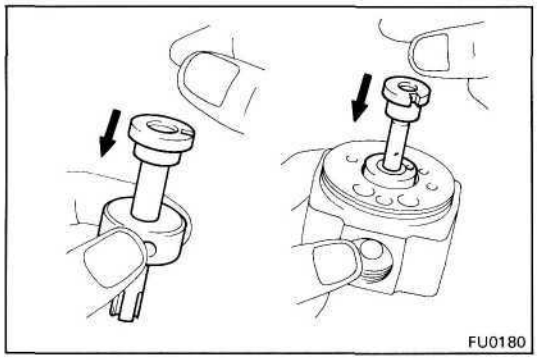

2. INSPECT PUMP PLUNGER, SPILL RING AND DISTRIBUTIVE HEAD

(a) Tilt the spill ring (distributive head) slightly and pull out the plunger.

(b) When released, the plunger should sink down smoothly into the spill ring (distributive head) by its own weight.

(c) Rotate the plunger and repeat the test at various positions.

If the plunger sticks at any position, replace the parts as a set.

(d) Insert the governor link ball pin into the spill ring and check that it moves smoothly without any play.

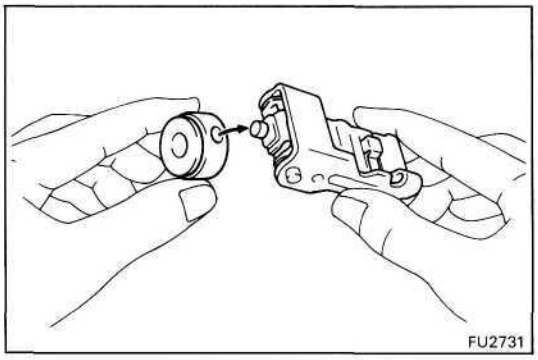

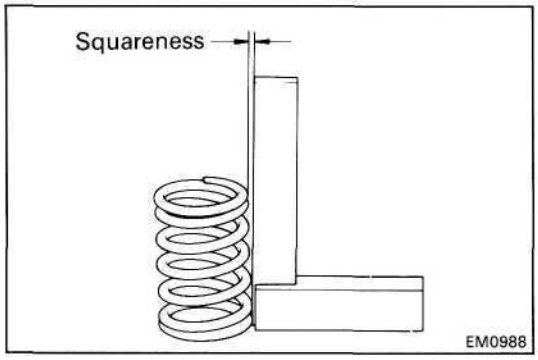

3. INSPECT PLUNGER SPRINGS FOR SQUARENESS

Using a steel square, check the squareness of the plunger springs.

Maximum squareness: 2.0 mm (0.079 in.)

If squareness is greater than maximum, replace the springs.

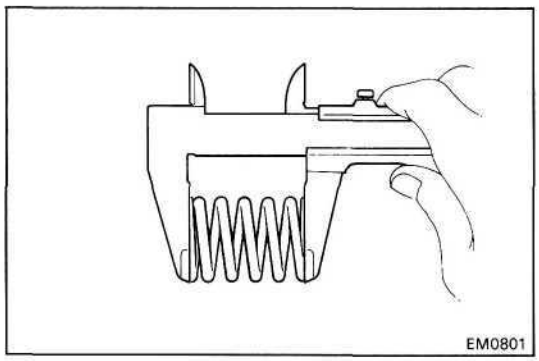

4. INSPECT SPRING LENGTH

Using vernier calipers, measure the free length of each spring.

Spring free length:

Delivery valve spring	
1 PZ and 1 HZ	**24.4 mm (0.961 in.)**
1 HD-T	**19.1 mm (0.752 in.)**
Plunger spring	
1PZand1HZ	**30.0 mm (1.181 in.)**
1HD-T	**31.2 mm (1.228 in.)**
Coupling spring	
1 PZ and 1 HZ	**16.6 mm (0.654 in.)**
1HD-T	**15.5 mm (0.610 in.)**
Pneumatic bellows spring (w/ HAC)	
1PZand1HZ(w/ HAC)	**35.0 mm (1.378 in.)**
Boost compensator spring	
1HD-T (Europe)	**19.7 mm (0.776 in.)**
1 HD-T (Others w/o BACS)	**19.6 mm (0.772 in.)**
1 HD-T (Others w/ BACS)	**21.8 mm (0.858 in.)**

If the free length is not as specified, replace the spring(s).

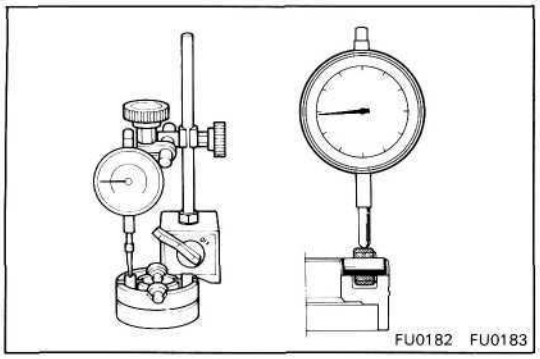

5. INSPECT ROLLER RING AND ROLLERS

Using a dial indicator, measure the roller height.

Roller height variation: 0.02 mm (0.0008 in.)

If the variation is greater than specification, replace the roller ring and roller as a set.

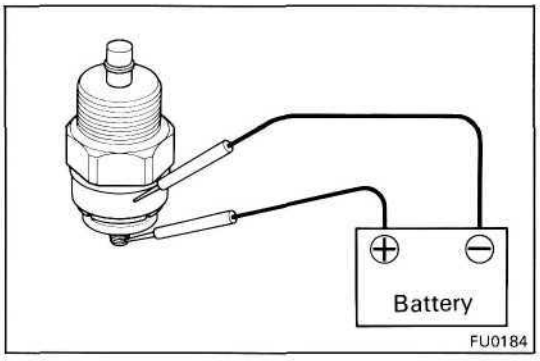

6. INSPECT FUEL CUT SOLENOID

(a) Connect the solenoid valve body and terminal to the battery terminals.

(b) You should feel the click from the solenoid valve when the battery power is connected and disconnected.

If the solenoid valve is not operating properly, replace it.

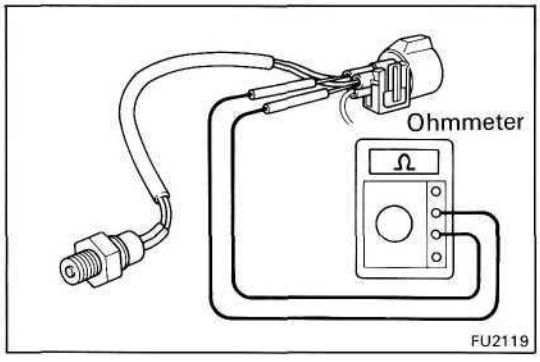

7. INSPECT PICKUP SENSOR

Using an ohmmeter, measure the resistance between the terminals.

Resistance: 600 - 800 Q

If resistance is not as specified, replace the sensor.

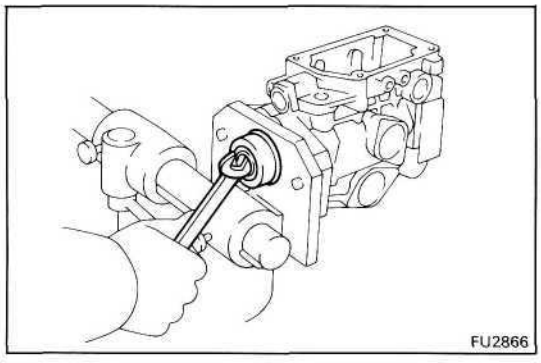

8. IF NECESSARY, REPLACE OIL SEAL

(a) Using a wrench, pry out the oil seal.

NOTICE: Be careful not to damage to the pump body.

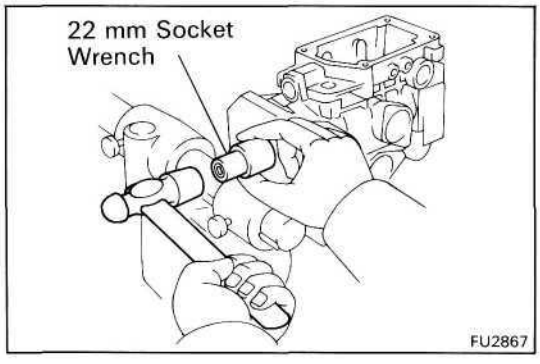

(b) Apply MP grease to the lip of a new oil seal.

(c) Using a 22 mm socket wrench, tap in the oil seal until its surface is flush with the pump housing.

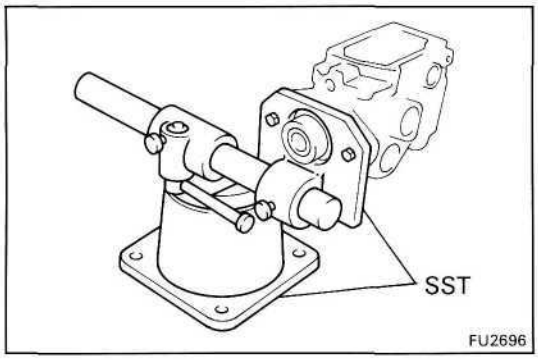

ASSEMBLY OF INJECTION PUMP

(See pages FU-30, 31,32)

1. MOUNT PUMP BODY TO SST (STAND)

SST 09241 -76022 and 09245-54010

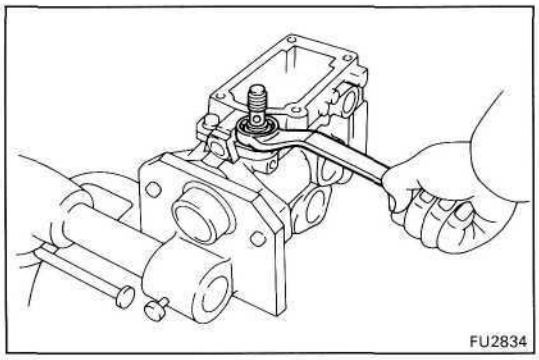

2. INSTALL FUEL INLET HOLLOW SCREW

Install a new gasket and the hollow screw.

Torque: 375 kg-cm (27 ft-lb, 37 N·m)

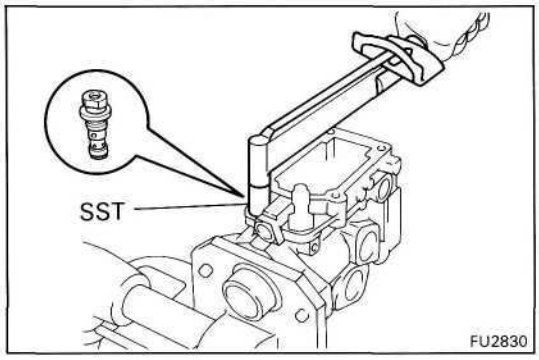

3. INSTALL REGULATOR VALVE

(a) Install the two O-rings to the regulator valve.

(b) Using SST, install the regulator valve.

SST 09260-54012 (09262-54020)

Torque: 90 kg-cm (78 in.-lb, 8.8 N·m)

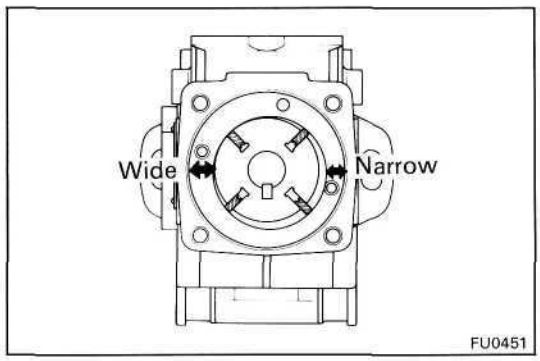

4. INSTALL FUEL FEED PUMP

(a) Install the liner, rotor and four blades.

(b) Check that the liner and blades are facing in the correct direction, as shown.

(c) Check that the blades move smoothly.

(d) Align the fuel outlet holes of the cover and liner.

(e) Install the pump cover with the two screws.

Torque: 25 kg-cm (22 in.-lb, 2.5 N·m)

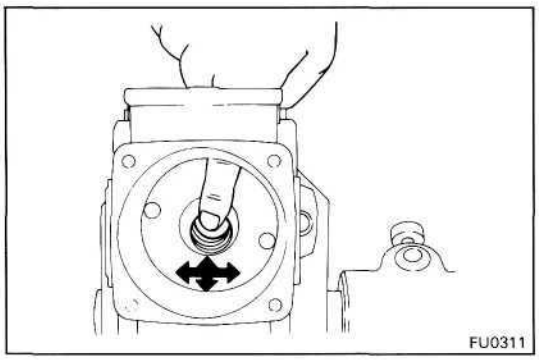

(f) Check that the rotor moves smoothly.

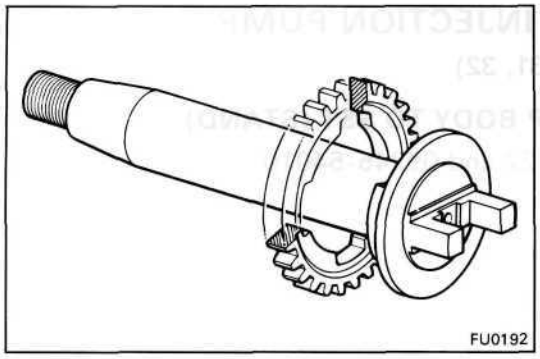

5. INSTALL DRIVE SHAFT

(a) Install the drive gear on the drive shaft as shown.

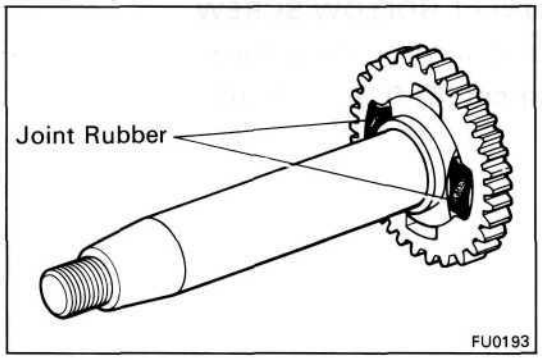

(b) Install two new joint rubbers into the drive gear.

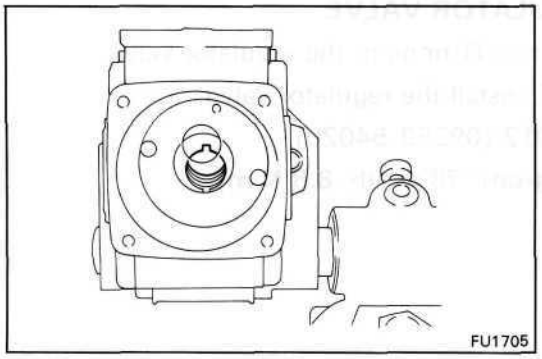

(c) Position the key groove of the feed pump rotor upward.

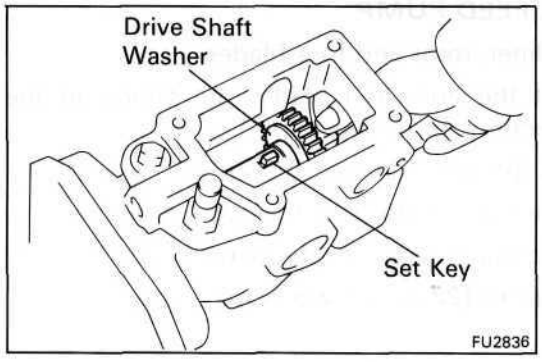

(d) Install the set key and drive shaft washer on the drive shaft and insert the drive shaft assembly into the pump housing.

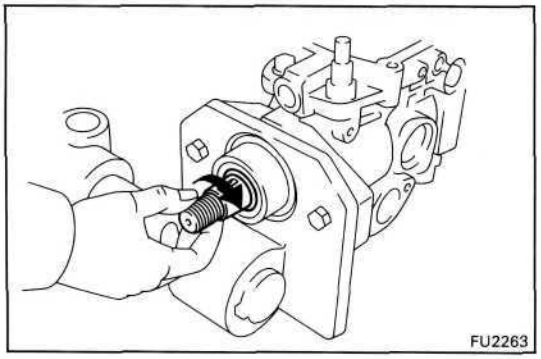

(e) Check that the drive shaft turns without catching.

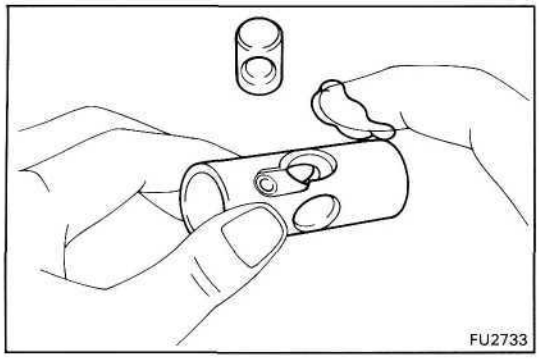

6. INSTALL TIMER PISTON

(a) Apply No. 50 DENSO grease to the timer piston.

(b) Install the sub-piston into the timer piston.

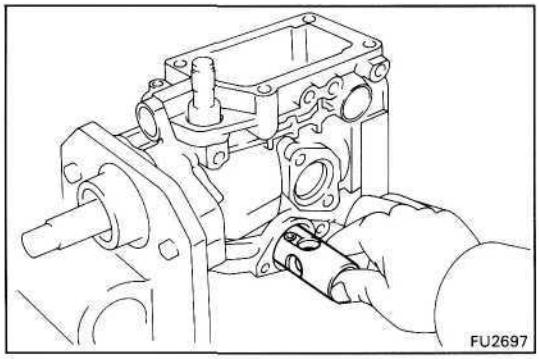

(c) Insert the timer piston into the pump housing.

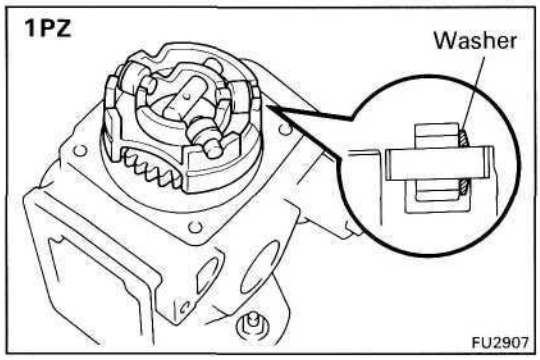

7. INSTALL ROLLER RING

(a) (1PZ)
Install the slide pin, three rollers and washers on the roller ring as shown in the illustration.

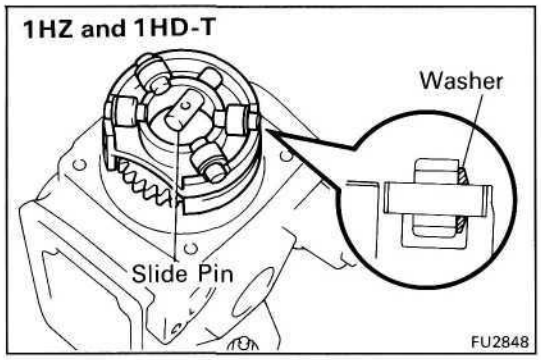

(b) (1 HZ and 1HD-T)
Install the slide pin, four rollers and washers on the roller ring.

(c) Check that the roller is facing the flat surface of the washer.

(d) Install the roller ring into the pump housing.

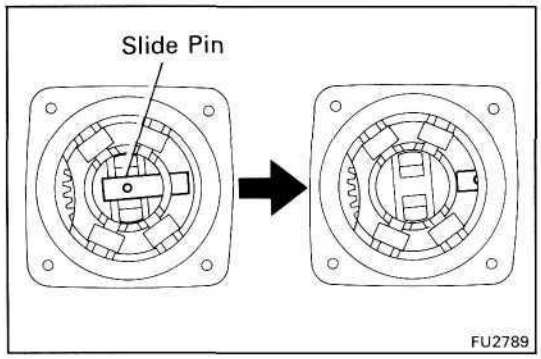

(e) Carefully install the slide pin into the sub-piston.

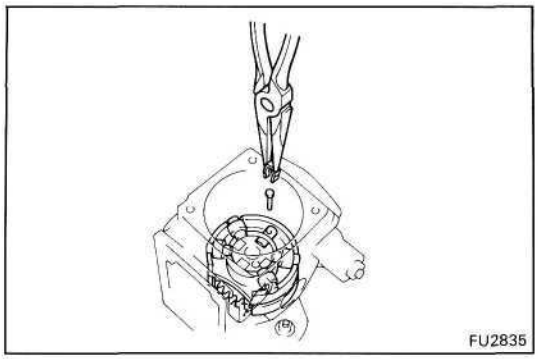

(e) Install the stopper pin and clip.

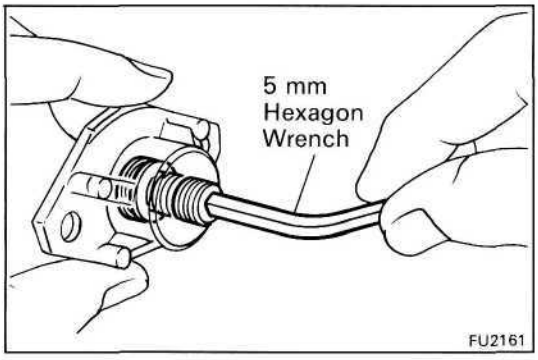

8. INSTALL TIMER SPRING

(a) Install a new O-ring to the timer adjusting screw.

(b) Using a 5 mm hexagon wrench, install the timer adjusting screw to the LH timer cover and temporarily install the nut.

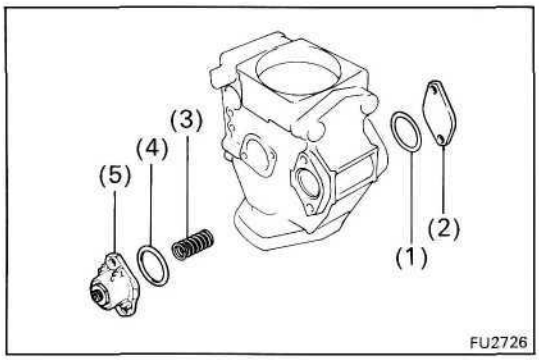

(c) Install the following parts:

(1) New O-ring
(2) RH timer cover
(3) Timer spring
(4) New O-ring
(5) LH timer cover, timer adjusting screw and nut assembly

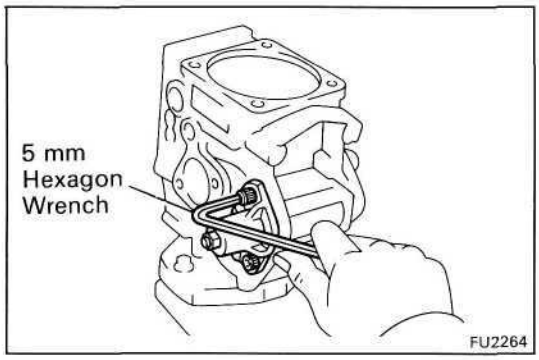

(d) Using a 5 mm hexagon wrench, install the the four bolts.

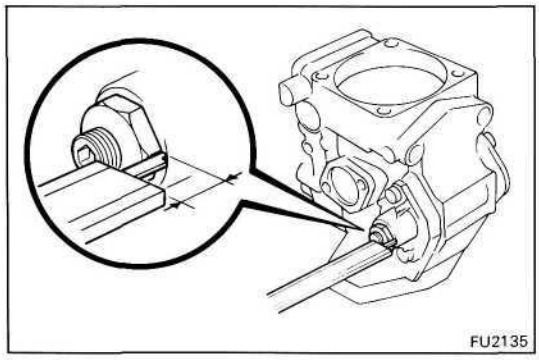

9. PRESET TIMER ADJUSTING SCREW

(a) Using vernier calipers, measure the protrusion of the adjusting screw from the timer cover.

Protrusion: 7.5-8.0 mm (0.295-0.315 in.)

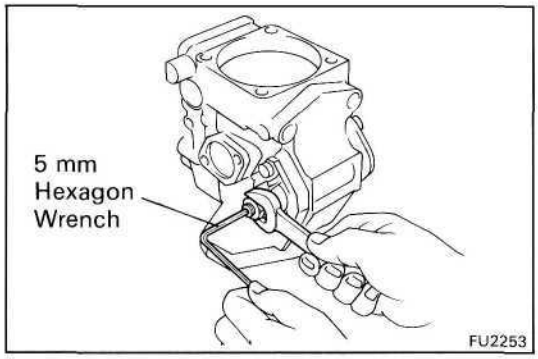

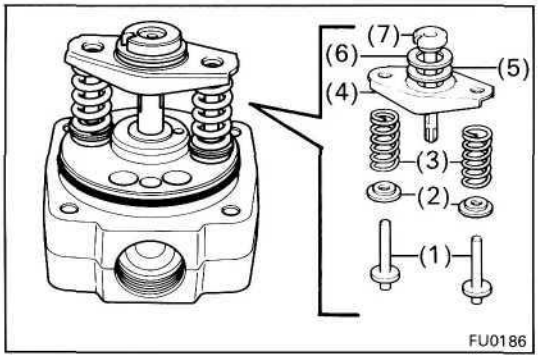

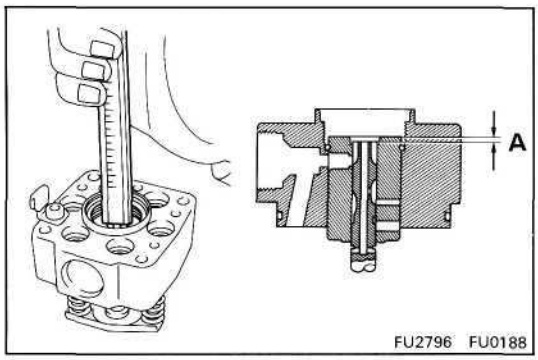

(b) Using a 5 mm hexagon wrench, adjust the protrusion of the adjusting screw from the timer cover.

10. ADJUST PLUNGER SPRING SHIM

(a) Install the following parts to the distributive head:
- (1) Two plunger spring guides
- (2) Two upper spring seats
- (3) Two plunger springs
- (4) Lower spring seat
- (5) Upper plunger plate
- (6) Lower plunger plate
- (7) Pump plunger

HINT: Do not assemble the plunger spring shims at this time.

(b) Using vernier calipers, measure clearance A indicated in the illustration.

(c) Determine the plunger spring shim size by using the following formula and chart.

1PZand 1HZ

New plunger spring shim thickness = 5.8 - A

1HD-T

New plunger spring shim thickness = 5.1 - A

A .... Measured plunger position

Plunger spring shim selection chart for 1 PZ and 1 HZ

mm (in.)

Measured clearance	Shim thickness	Measured clearance	Shim thickness
More than 5.3 (0.209)	0.5 (0.020)	4.3 – 4.5 (0.169 – 0.177)	1.5 (0.059)
5.0 – 5.2 (0.196 – 0.205)	0.8 (0.031)	4.0 – 4.2 (0.157 – 0.165)	1.8 (0.071)
4.8 – 4.9 (0.189 – 1.193)	1.0 (0.039)	Less than 3.9 (0.154)	2.0 (0.079)
4.6 – 4.7 (0.181 – 0.185)	1.2 (0.047)	–	–

Plunger spring shim selection chart for 1 HD-T

mm (in.)

Measured clearance	Shim thickness	Measured clearance	Shim thickness
More than 4.6 (0.181)	0.5 (0.020)	3.6 – 3.8 (0.142 – 0.150)	1.5 (0.059)
4.3 – 4.5 (0.169 – 0.177)	0.8 (0.031)	3.3 – 3.5 (0.130 – 0.138)	1.8 (0.071)
4.1 – 4.2 (0.161 – 0.165)	1.0 (0.039)	Less than 3.2 (0.126)	2.0 (0.079)
3.9 – 4.0 (0.154 – 0.157)	1.2 (0.047)	–	–

HINT:
- For a measurement between listed sizes, use the next larger size. Ex. If thickness is 1.1 mm (0.043 in.) by calculation, use a 1.2 mm (0.047 in.) shim.
- Select two shims which have the same thickness.

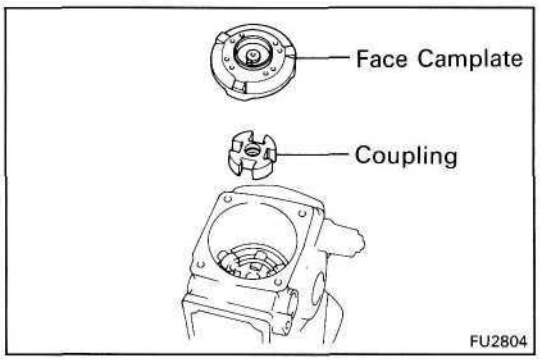

11. (1PZ)

ADJUST PLUNGER ADJUSTING SHIM

(a) Install the coupling and face camplate.

HINT: Do not assemble the coupling spring.

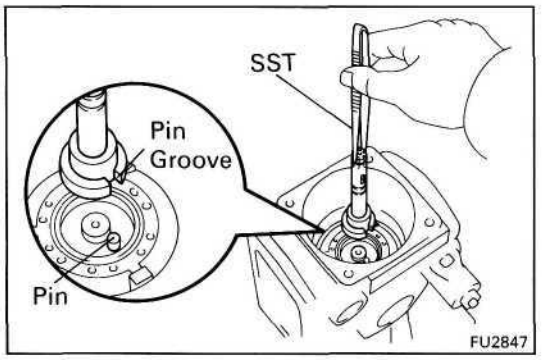

(b) Clean the plunger adjusting shim and contacting surface area.

(c) Align the pin groove of the pump plunger with the face camplate pin.

(d) Using SST, install the used plunger adjusting shim and pump plunger.

SST 09260-54012 (09269-54030)

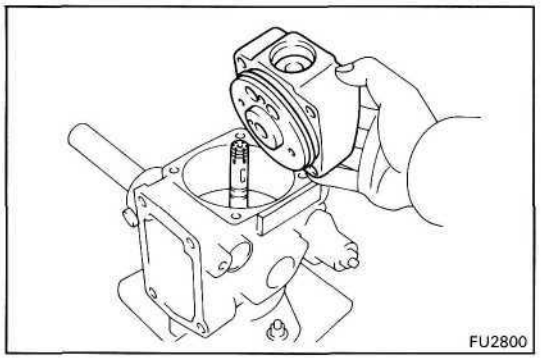

(e) Install the distributive head with the four bolts.

Torque: 120 kg-cm (9 ft-lb, 12 N·m)

NOTICE: Be careful not to damage the pump plunger.

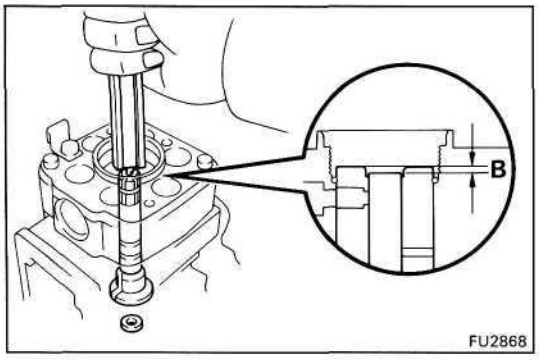

(f) Using vernier calipers, measure dimension B indicated in the illustration.

(g) Determine the plunger adjusting shim size by using the following formula and chart.

New adjusting shim thickness = T + (B - 3.3)
T ... Thickness of used shim
B ... Measured plunger position

Plunger adjusting shim selection chart

Installed shim mm	Measured clearance mm																			
	2.3	2.4	2.5	2.6	2.7	2.8	2.9	3.0	3.1	3.2 – 3.4	3.5	3.6	**3.7**	3.8	3.9	4.0	4.1	4.2	4.3	4.4
1.9											2.1	2.2	2.3	2.4	2.5	2.6	2.7	2.8	2.9	2.9
2.0									1.9		2.2	2.3	2.4	2.5	2.6	2.7	2.8	2.9	2.9	
2.1								1.9	1.9		2.3	2.4	2.5	2.6	2.7	2.8	2.9	2.9		
2.2							1.9	1.9	2.0		2.4	2.5	2.6	2.7	2.8	2.9	2.9			
2.3						1.9	1.9	2.0	2.1		2.5	2.6	2.7	2.8	2.9	2.9				
2.4					1.9	1.9	2.0	2.1	2.2		2.6	2.7	**2.8**	2.9	2.9					
2.5				1.9	1.9	2.0	2.1	2.2	2.3		2.7	2.8	2.9	2.9						
2.6			1.9	1.9	2.0	2.1	2.2	2.3	2.4		2.8	2.9	2.9							
2.7		1.9	1.9	2.0	2.1	2.2	2.3	2.4	2.5		2.9	2.9								
2.8	1.9	1.9	2.0	2.1	2.2	2.3	2.4	2.5	2.6		2.9									
2.9	1.9	2.0	2.1	2.2	2.3	2.4	2.5	2.6	2.7											

Plunger adjusting shim thickness mm (in.)	1.9 (0.075)	2.0 (0.079)	2.1 (0.083)	2.2 (0.087)	2.3 (0.091)	2.4 (0.094)	2.5 (0.098)	2.6 (0.102)	2.7 (0.106)	2.8 (0.110)	2.9 (0.114)

EXAMPLE: The 2.4 mm (0.094 in.) shim is installed and measured clearance is 3.7 mm (0.146 in.). Replace the 2.4 mm (0.094 in.) shim with a 2.8 mm (0.110 in.) shim.

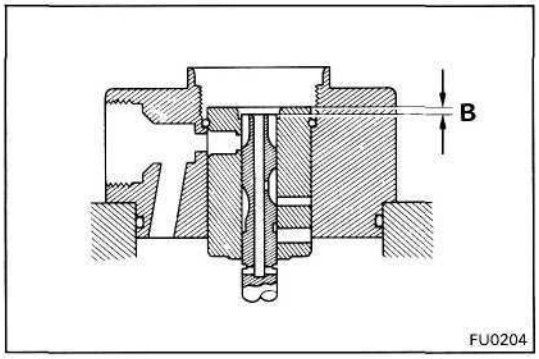

(h) Install a new plunger adjusting shim and recheck dimension B.

Dimension B: 3.2-3.4 mm (0.126-0.134 in.)

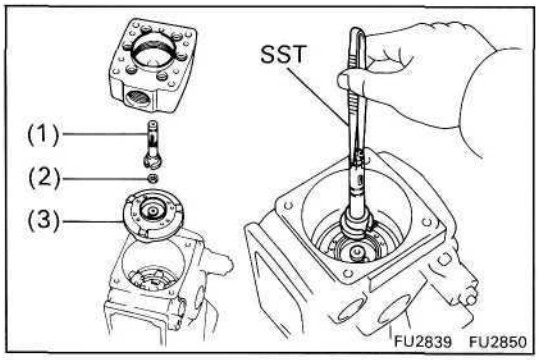

(i) Remove the distributive head.
(j) Using SST, remove the following parts:
  (1) Pump plunger
  (2) Plunger adjusting shim
  (3) Face camplate

SST 09260-5401 2 (09269-54030)

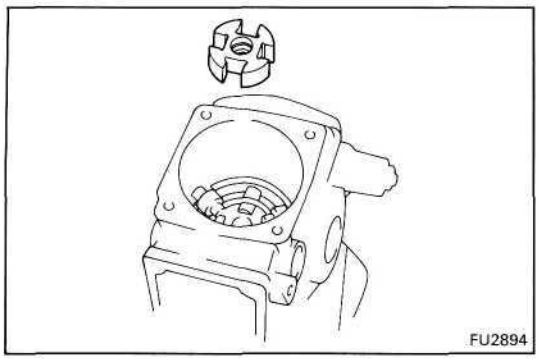

12. (1 HZ and 1HD-T)
INSTALL COUPLING

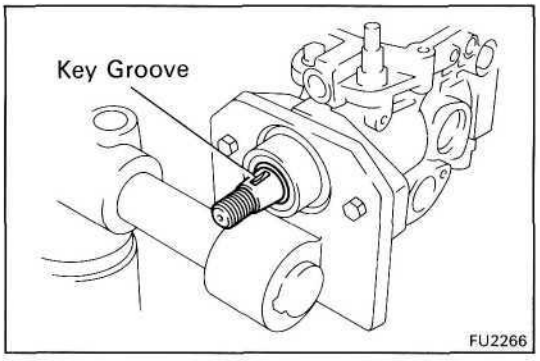

13. INSTALL FACE CAM PLATE

(a) Face the drive shaft with the key groove facing upward.

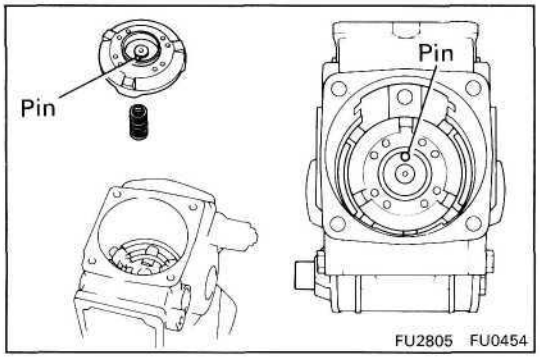

(b) Install the coupling spring and camplate with the camplate pin facing the governor cover side.

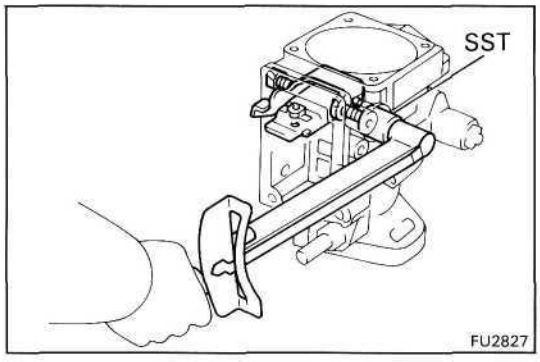

14. INSTALL GOVERNOR LINK

(a) Using SST, install the governor link with two new gaskets and the two support bolts.

Torque: 140 kg-cm (10 ft-lb, 14 N-m)

SST 09260-54012 (09269-54040)

(b) Check that the governor link moves smoothly.

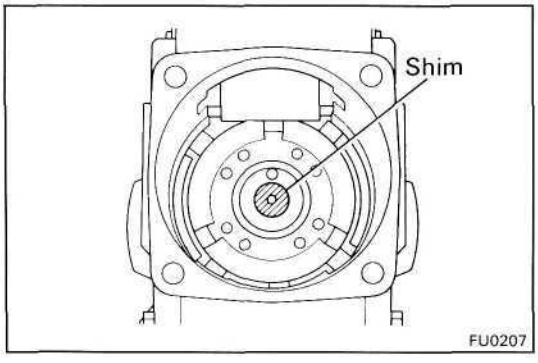

15. INSTALL PUMP PLUNGER

(a) (1PZ)
Place the previously used plunger adjusting shim on center of the camplate.

(1 HZ and 1HD-T)
Place the previously used plunger adjusting shim on the center of the camplate.

NOTICE: Do not apply grease to the shim.

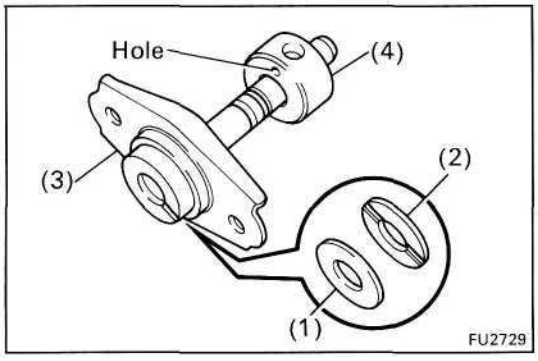

(b) Install the following parts to the pump plunger:
(1) Lower plunger plate
(2) Upper plunger plate
(3) Lower spring seat
(4) Spill ring

HINT: Face the spill ring with the hole facing the lower spring seat.

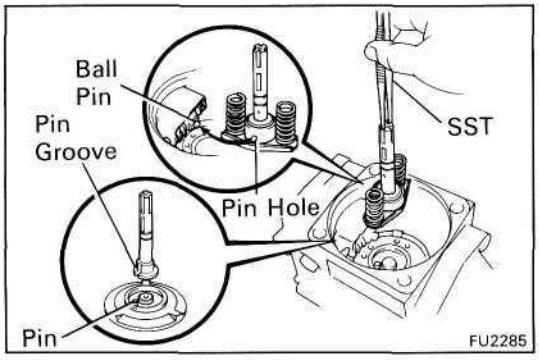

(c) Align the pin groove of the plunger with the pin of the face camplate.
(d) Align the ball pin of the governor link with the pin hole of the spill ring.
(e) Using SST, install the pump plunger and two plunger springs.

SST 09260-5401 2 (09269-54030)

16. INSTALL DISTRIBUTIVE HEAD

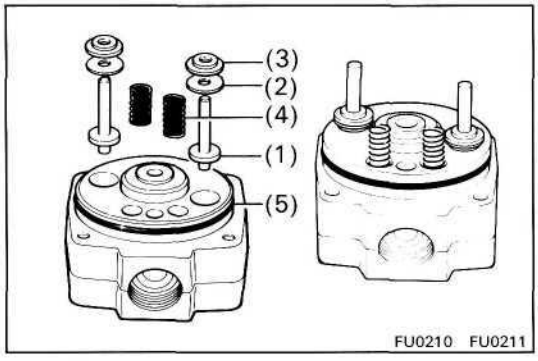

(a) Apply No.50 DENSO grease to the following parts and install them to the distributive head:
(1) Two plunger spring guides
(2) Two new selected plunger spring shims
(3) Two upper spring seats
(4) Two lever support springs
(5) New O-ring

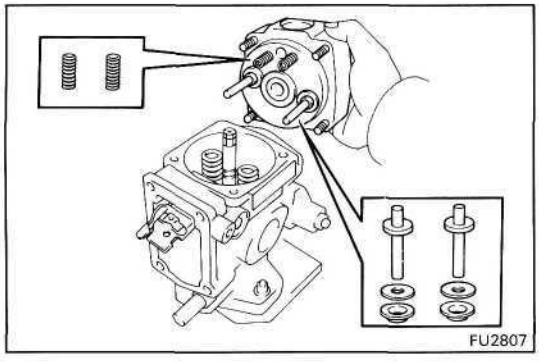

(b) Install the distributive head.

NOTICE: Be careful not to damage the pump plunger.

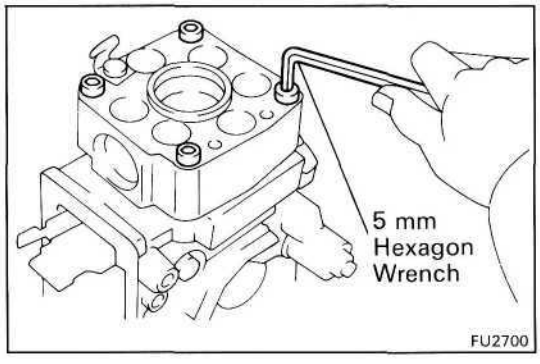

(c) Using 5 mm hexagon wrench, install the four bolts.

Torque: 120 kg-cm (9 ft-lb, 12 N·m)

HINT: Use the bolt which is 45 mm (1.77 in.) in length.

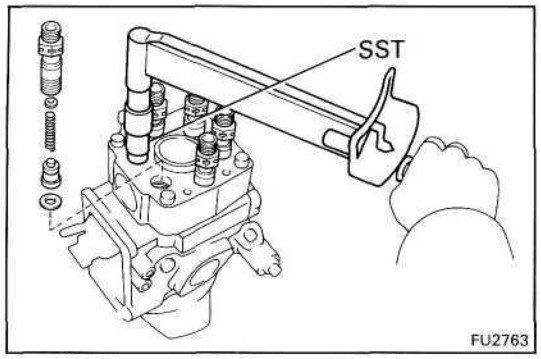

17. INSTALL DELIVERY VALVE HOLDERS

(a) Install new gaskets and the valves into the distributive head.

(b) Install the spring seats and springs into the delivery valve holders.

(c) Using SST, install the delivery valve holders.

SST 09260-54012 (09269-54020)

Torque:

1PZ and 1HZ	**500 kg-cm (36 ft-lb, 49 N-m)**
1HD-T	**550 kg-cm (40 ft-lb, 54 N-m)**

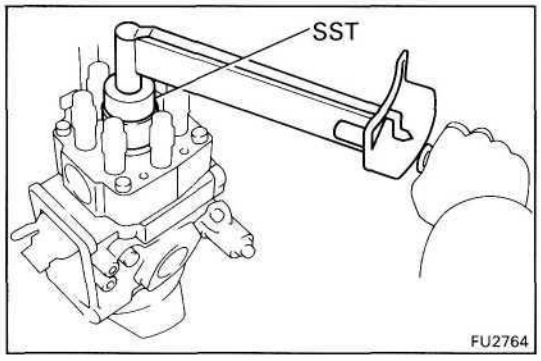

18. (IPZ only)

INSTALL DISTRIBUTIVE HEAD PLUG

(a) Install a new O-ring to the head plug.

(b) Using SST, install the head plug.

SST 09260-5401 2 (09262-54010)

Torque: 700 kg-cm (51 ft-lb, 69 N-m)

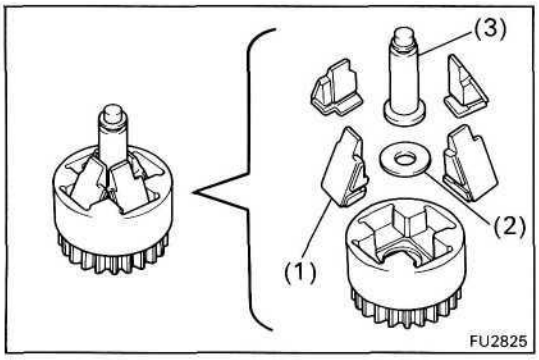

19. INSTALL GOVERNOR SHAFT AND FLYWEIGHT HOLDER

(a) Install the following parts to the flyweight holder:

(1) Four flyweight

(2) No.2 flyweight washer

(3) Governor sleeve

HINT: Replace the four flyweights as a set.

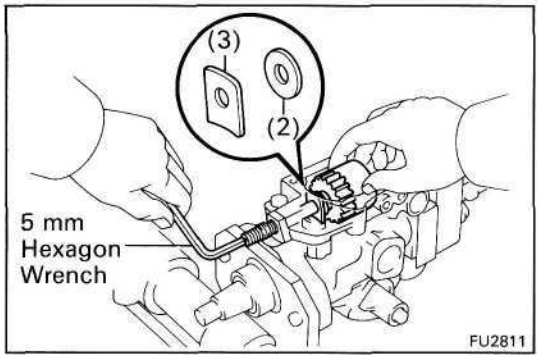

(b) Install a new O-ring to the governor shaft.

(c) Place the flyweight holder assembly (1) in position, and install the No.1 flyweight washer (2) and governor gear adjusting washer (3) between the flyweight holder and pump housing.

(d) Install the governor shaft through the governor gear adjusting washer, No.1 flyweight washer and flyweight holder assembly.

(e) Using a 5 mm hexagon wrench, turn the governor shaft counterclockwise.

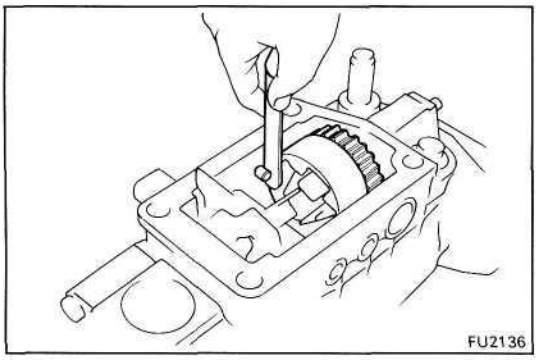

20. CHECK FLYWEIGHT HOLDER THRUST CLEARANCE

Using a thickness gauge, measure the thrust clearance between the housing pin and flyweight holder.

Thrust clearance: 0.15-0.35 mm (0.0059-0.0138 in.)

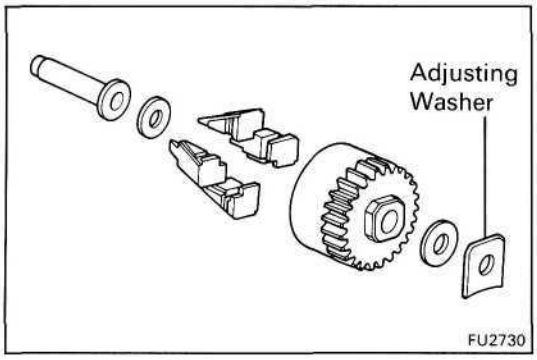

If the thrust clearance is not as specified, adjust with a governor gear adjusting washer.

Governor gear adjusting washer thickness:
1.05 mm (0.0413 in.)
1.25 mm (0.0492 in.)
1.45 mm (0.0571 in.)
1.65 mm (0.0650 in.)
1.85 mm (0.0728 in.)

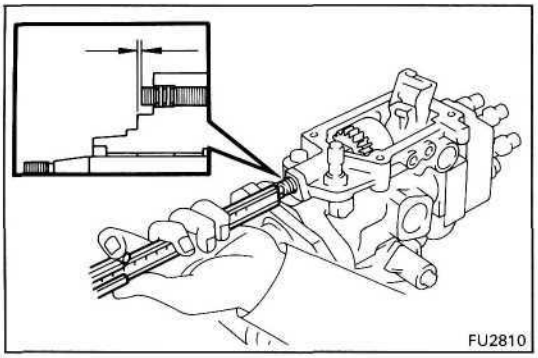

21. ADJUST PROTRUSION OF GOVERNOR SHAFT

(a) Using vernier calipers, measure the protrusion of the governor shaft.

Protrusion: 0.5-2.0 mm (0.020-0.079 in.)

If the protrusion is not as specified, adjust by turning the governor shaft.

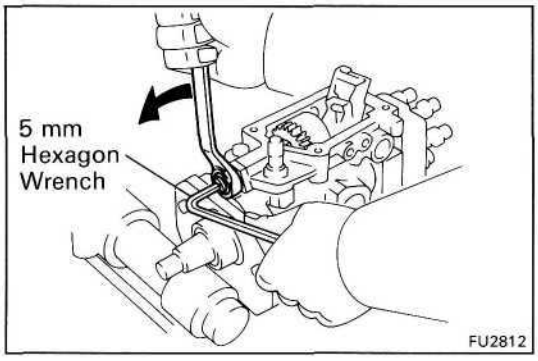

(b) Install and tighten the nut while holding the governor shaft with a 5 mm hexagon wrench.

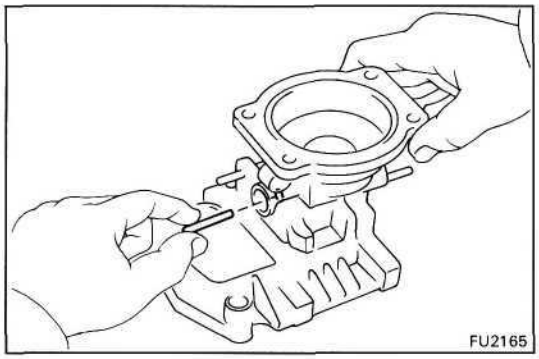

22. (1 PZ (w/ HAC) and 1 HZ (w/ HAC)) ASSEMBLE HIGH ALTITUDE COMPENSATOR

Install control lever

(a) Insert the connecting pin into governor cover.

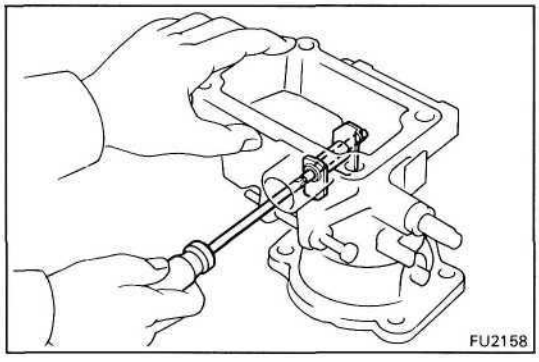

(b) Using a small screwdriver, install the control lever with the support pin.

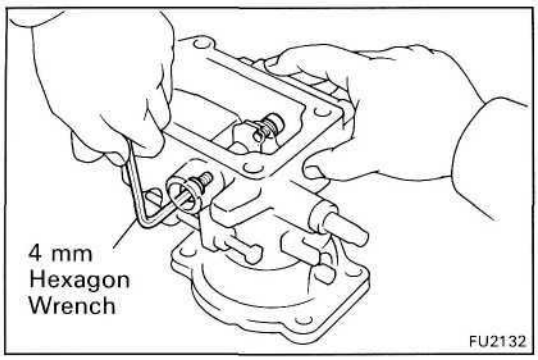

(c) Using a 4 mm hexagon wrench, install two new gaskets and the two bolts.

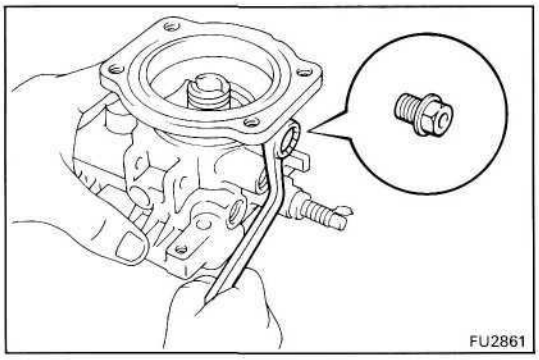

23. (1HD-T)
ASSEMBLE BOOST COMPENSATOR

A. Install No.2 overflow screw

Install the No.2 overflow screw and cover.

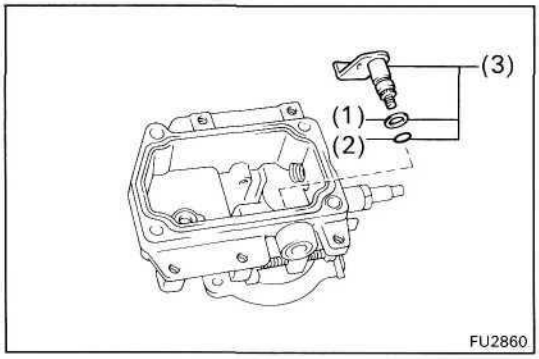

B. Install No.2 PCS lever

Install the following parts to the governor cover:

(1) Plate washer
(2) O-ring
(3) No.2 lever, O-ring and washer assembly

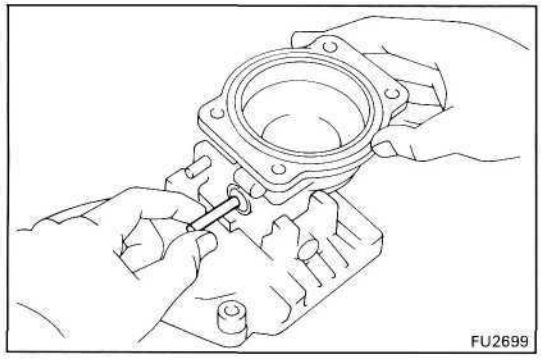

C. Install control lever

(a) Insert the connecting pin into governor cover.

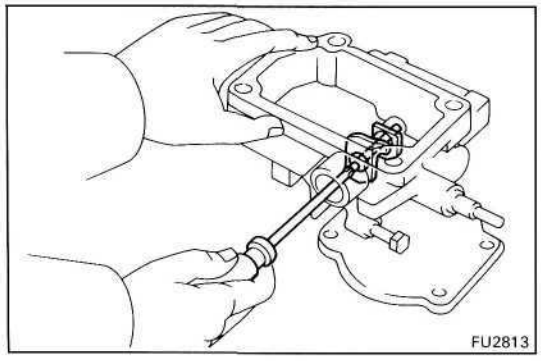

(b) Using a small screwdriver, install the control lever with the support pin.

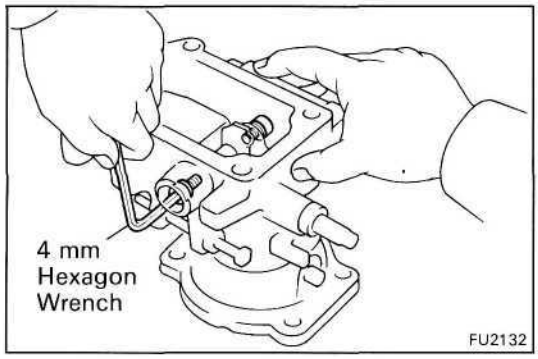

(c) Using a 4 mm hexagon wrench, install two new gaskets and the two bolts.

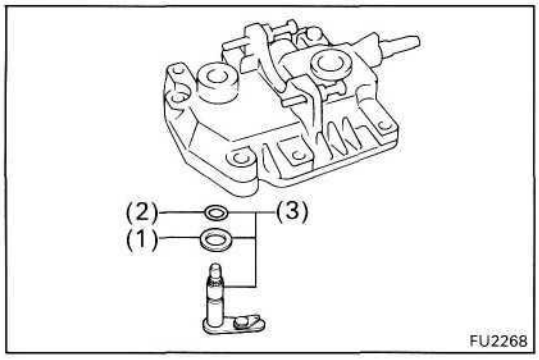

24. INSTALL ADJUSTING LEVER SHAFT TO GOVERNOR SHAFT

Install the following parts to the governor cover:

(1) Plate washer

(2) New O-ring

(3) Adjusting lever shaft, O-ring and plate washer assembly

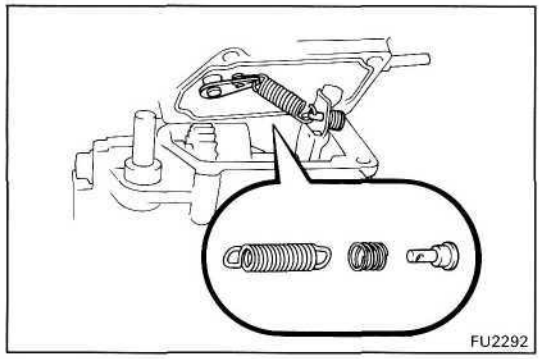

25. INSTALL GOVERNOR COVER

(a) Install the speed control spring to the adjusting shaft.

(b) Install a new gasket to the groove of the governor cover.

(c) Install the damper spring and spring seat, and connect the speed control spring to the spring seat.

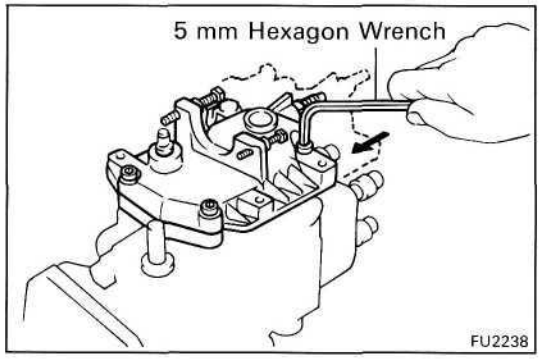

(d) Using a 5 mm hexagon wrench, install the governor cover with the four bolts.

Torque: 85 kg-cm (74 in.-lb, 8.3 N·m)

HINT: Use the bolt which is 35 mm (1.38 in.) in length.

(e) (w/ HACand 1HD-T)
Install the idle speed adjusting screw.

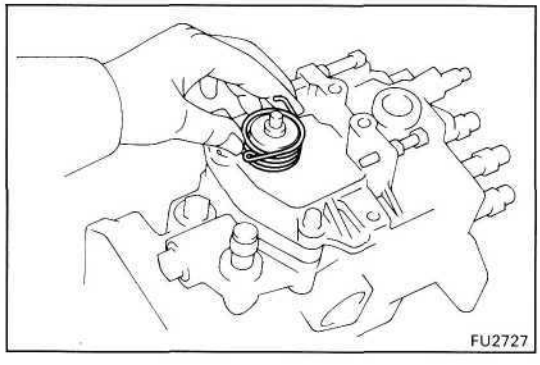

26. INSTALL ADJUSTING LEVER

(a) Place the return spring on the governor cover.

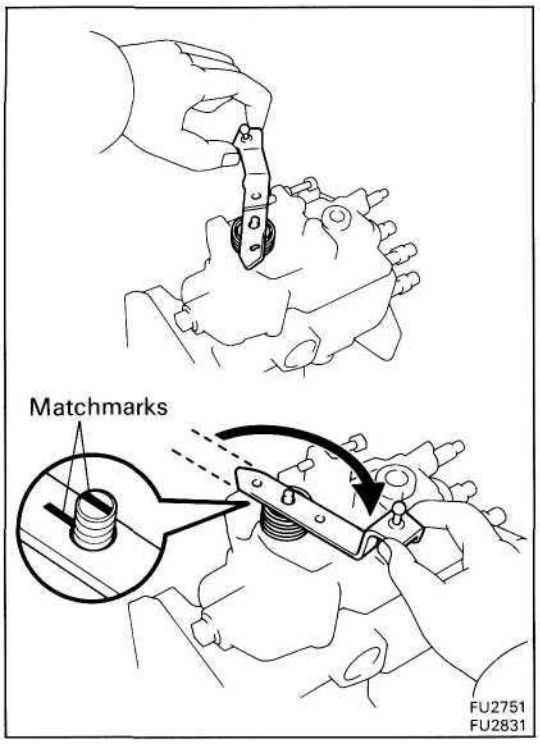

(b) Hook the return spring to the adjusting lever, and turn and place the adjusting lever on the governor shaft.

(c) Align the lines of the adjusting lever shaft and adjusting lever.

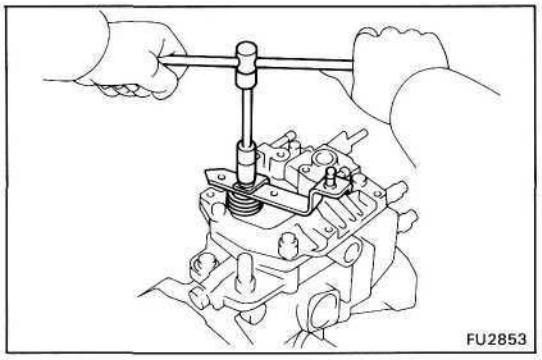

(d) Install the adjusting lever with the spring guide and nut.

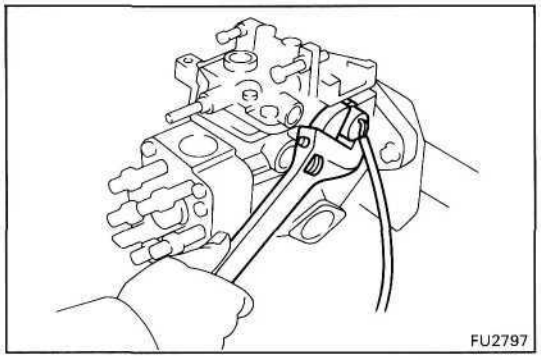

27. (w/TACHOMETER)
INSTALL PICKUP SENSOR

(a) Install a new O-ring and pickup sensor.

(b) Connect the two lead wires to the connector.

Torque: 210 kg-cm (15 ft-lb, 21 N·m)

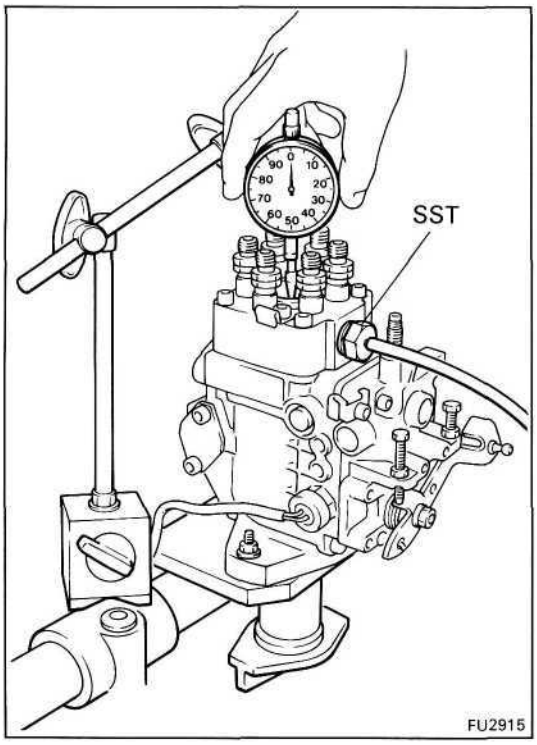

28. (1HZand1HD-Tonly)
ADJUST PLUNGER PRE-STROKE

(a) Install SST to the fuel cut solenoid installation screw section.

SST 09275-17010

(b) Set the dial indicator so that the tip of the dial indicator push rod touches the upper surface of the plunger.

(c) Rotate the drive shaft, set the plunger to BDC and set the scale on the dial indicator to 0 mm (0 in.)

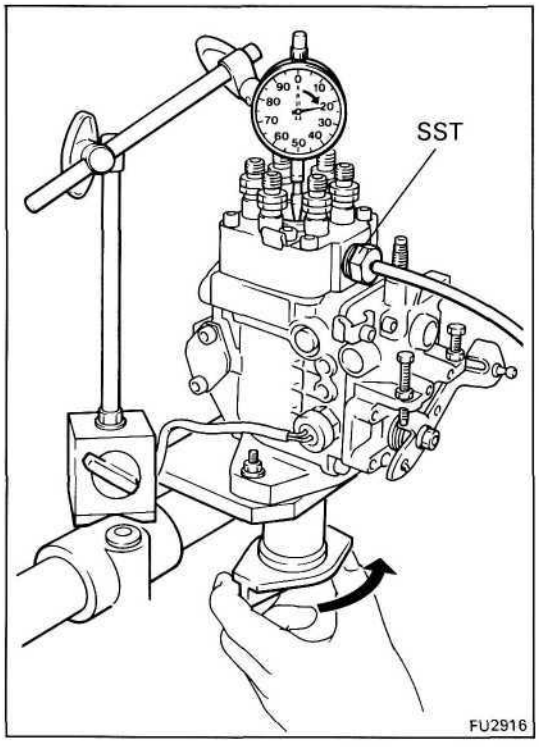

(d) Apply a few drops of light oil (diesel fuel) to the top surface of the plunger, and when 0.1 kg/cm^2 (1.4 psi, 49 kPa) of air is applied to SST, bubbles appear on the upper surface of the plunger.

SST 09275-17010

(e) Slowly rotate the drive shaft in the pump rotation direction (clockwise) and read the dial indicator when the bubbles on the top of the plunger disappear.

Pre-stroke: 0.15-0.25 mm (0.0059- 0.0098 in.)

If the pre-stroke is not as specified, replace the plunger adjusting shim under the plunger with a different sized shim.

Adjusting thim thickness		mm (in.)
1.90 (0.0748)	2.35 (0.0925)	2.80 (0.1102)
1.95 (0.0768)	2.40 (0.0945)	2.85 (0.1122)
2.00 (0.0787)	2.45 (0.0965)	2.90 (0.1142)
2.05 (0.0807)	2.50 (0.0984)	2.94 (0.1157)
2.10 (0.0827)	2.55 (0.1004)	2.99 (0.1177)
2.15 (0.0846)	2.60 (0.1024)	3.04 (0.1197)
2.20 (0.0866)	2.65 (0.1043)	3.09 (0.1216)
2.25 (0.0886)	2.70 (0.1063)	3.14 (0.1236)
2.30 (0.0906)	2.75 (0.1083)	3.19 (0.1256)

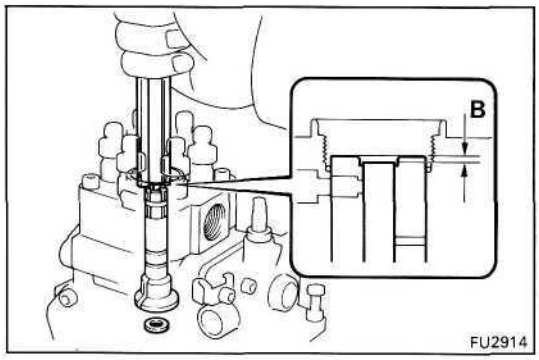

HINT: If the shim is made thicker, the pre-stroke is decreased

(f) After completing the pre-stroke adjustment, check that dimension B is within specifications.

Dimension B: 2.8-3.2 mm (0.110-0.126 in.)

If dimension B is not within the specification, replace the distributor head.

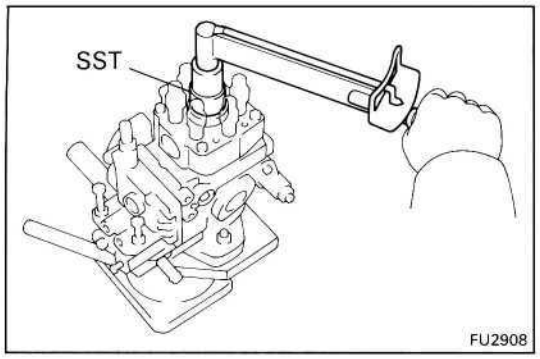

29. (1HZand 1HD-T)

INSTALL DISTRIBUTIVE HEAD PLUG

(a) Install a new O-ring to the head plug.

(b) Using SST, install the head plug.

SST 09260-5401 2 (09262-54010)

Torque: 1HZ 700 kg-cm (51 ft-lb, 69 N·m)
1HD-T 900 kg-cm (65 ft-lb, 88 N·m)

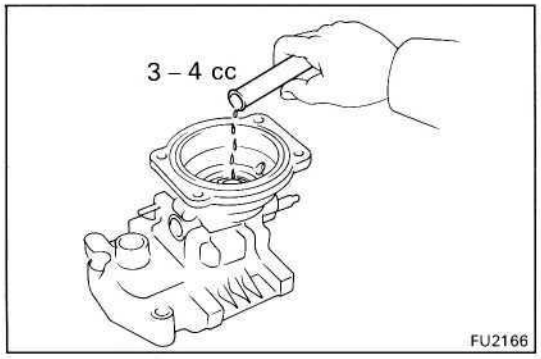

30. (1 PZ (w/ HAC) and 1 HZ (w/ HAC))
ASSEMBLE HIGH ALTITUDE COMPENSATOR

A. Install pneumatic bellows

(a) Insert 3-4 cc (0.18-0.24 cu in.) of engine oil into the bushing hole.

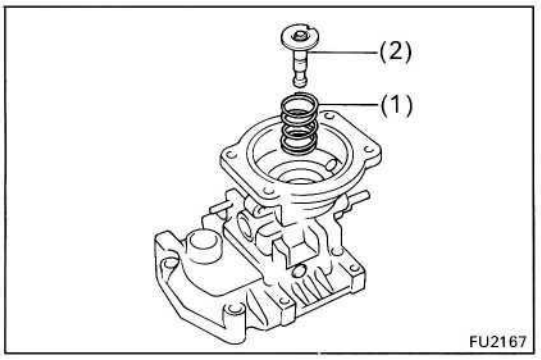

(b) Place the following parts on the governor cover:
(1) Pneumatic bellows spring
(2) Push rod

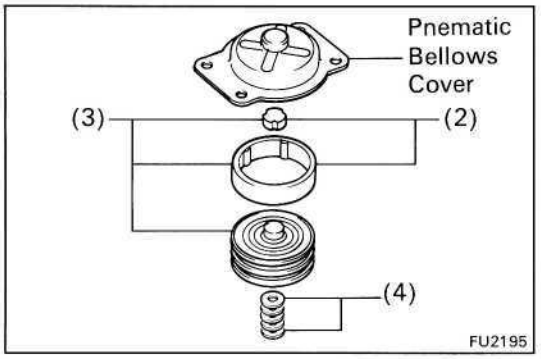

(c) Install the following parts to the pneumatic bellows cover:
(1) Pneumatic bellows
(2) Two rubber caps
(3) Pneumatic bellows and two rubber caps assembly
(4) Shims

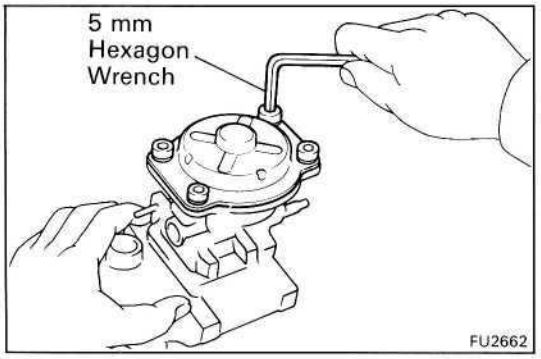

(d) Install a new gasket and the pneumatic bellows and bellows cover assembly to the governor cover.

(e) Using a 5 mm hexagom wrench, install the four bolts.

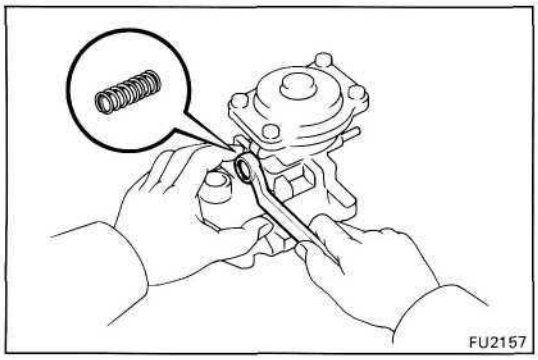

B. Install lever control spring

Install the lever control spring with a new gasket and the bolt.

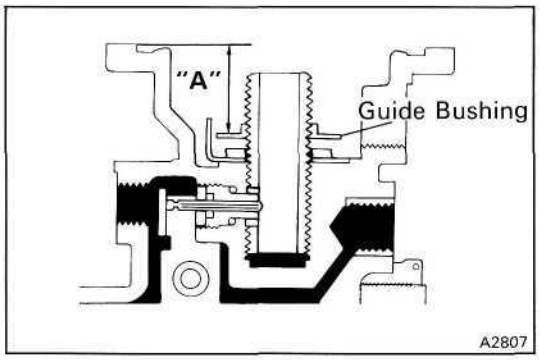

31. (1HD-T)
ASSEMBLE BOOST COMPENSATOR

A. Install guide bushing

Install and adjust the guide bushing to the dimension "A" as shown in the illustration.

Dimension "A":

Europe 19.2-19.3 mm (0.755- 0.760 in.)
Others 18.6-18.7 mm (0.732- 0.736 in.)

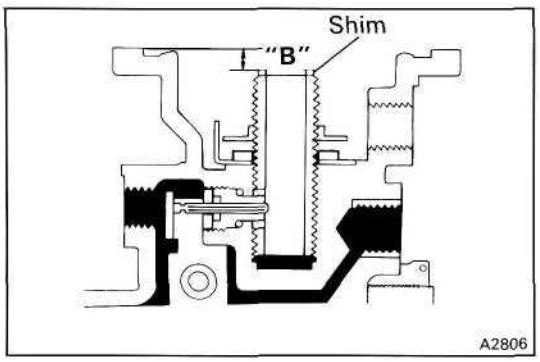

B. Install boost compensator diaphragm

(a) Adjust boost compensator shim

(1) Place the shim on the guide bushing

(2) Using vernier calipers, measure the dimension "B" as shown in the illustration.

Dimension "B":

Europe 4.8-5.0 mm (0.189-0.197 in.)
Others 6.0-6.2 mm (0.236-0.244 in.)

If the dimension is not within specification, select and install the correct shim.

Adjusting shim thickness:

1.1 mm (0.043 in.)
1.3 mm (0.051 in.)
1.5 mm (0.059 in.)
1.7 mm (0.067 in.)
1.9 mm (0.075 in.)
2.1 mm (0.083 in.)
2.3 mm (0.090 in.)
2.5 mm (0.098 in.)
2.7 mm (0.106 in.)
2.9 mm (0.114 in.)
3.1 mm (0.122 in.)
3.3 mm (0.130 in.)

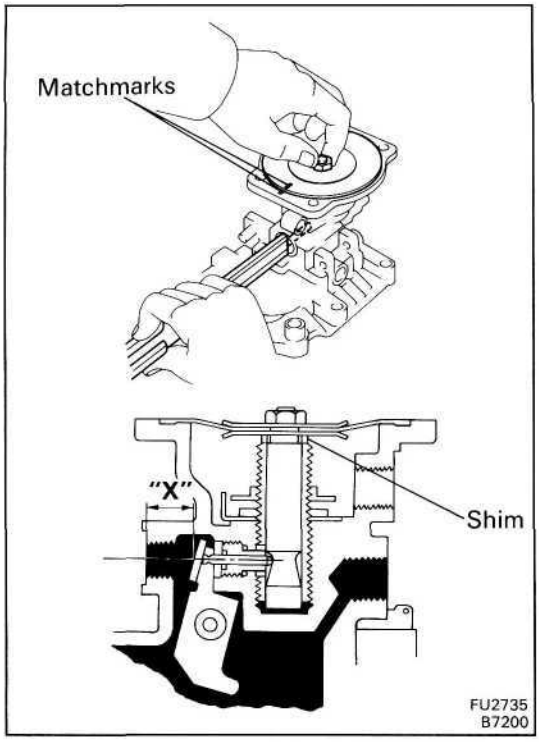

(b) Adjust the installation direction of boost compensator diaphragm.

(1) Install the shim and diaphragm.

HINT: Do not assemble the spring.

(2) While pushing on the diaphragm, measure dimension "X" with vernier calipers as shown.

Dimension "X": 6.9-7.1 mm (0.272-0.280 in.)

HINT: Measure at the center of the hole.

(3) Place matchmarks on the diaphragm and governor cover.

(4) Remove the diaphragm.

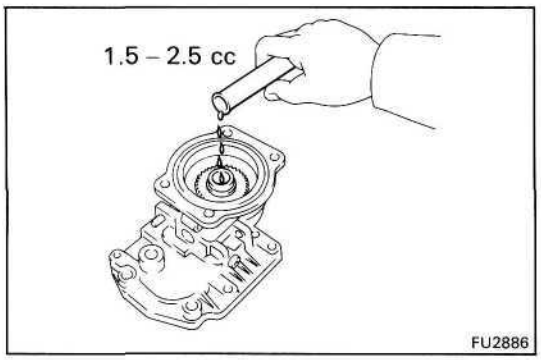

(c) Insert 1.5-2.5 cc (0.09-0.15 cu in.) of engine oil into the bushing hole.

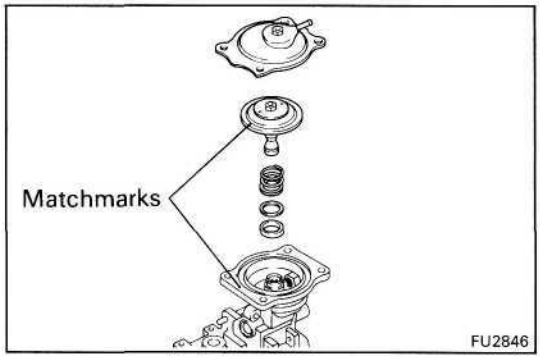

(d) Install spring, shim and diaphragm.

(e) Align the matchmarks on the diaphragm and governor cover.

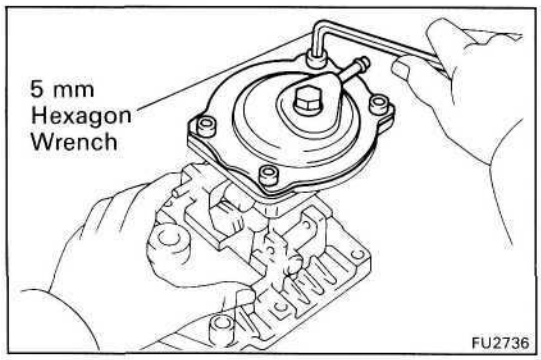

(f) Using a 5 mm hexagon wrench, install the four bolts.

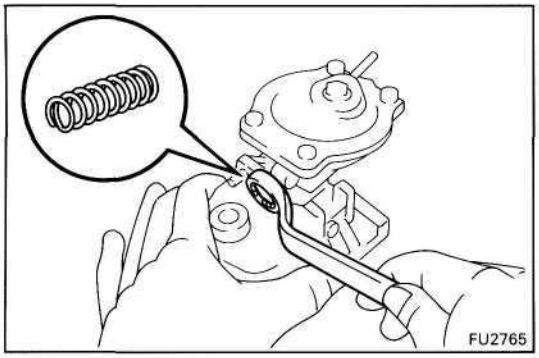

C. Install lever control spring

Install the lever control spring with a new gasket and the bolt.

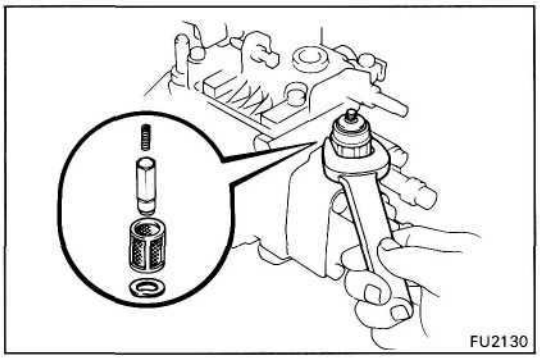

32. INSTALL FUEL CUT SOLENOID

(a) Install a new O-ring on the fuel cut solenoid.

(b) Install the strainer, valve, spring, a new gasket and the fuel cut solenoid.

Torque: 225 kg-cm (16 ft-lb, 22 N·m)

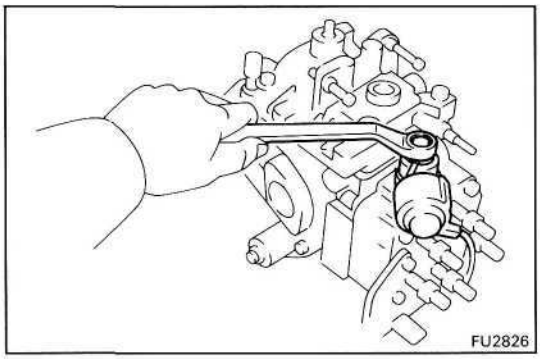

(c) Install the lead wire to the fuel cut solenoid with the nut.

(d) Install the dust cover to the fuel cut solenoid.

(e) Install the lead wire connector to bracket.

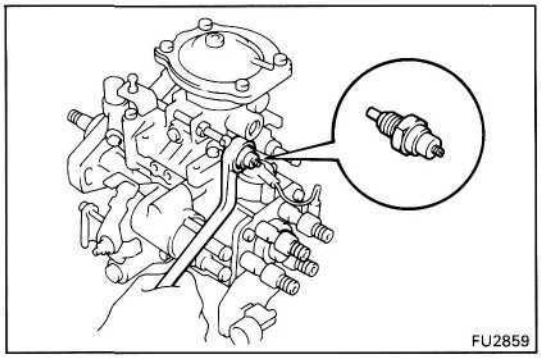

33. (w/ Dash Pot)
INSTALL DASH POT

Install the dash pot and gasket.

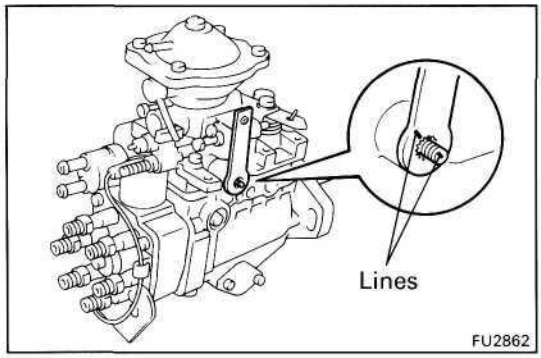

34. (w/ PCS)
INSTALL NO.1 PCS LEVER

(a) Align the lines of the levers.

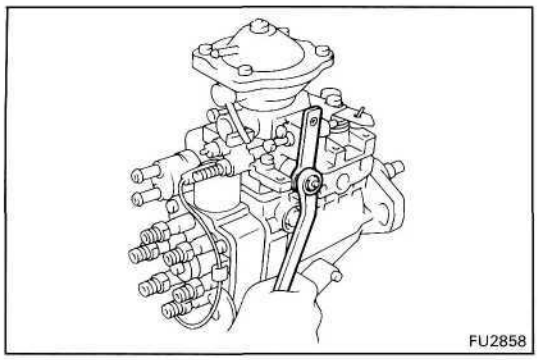

(b) Install the nut.

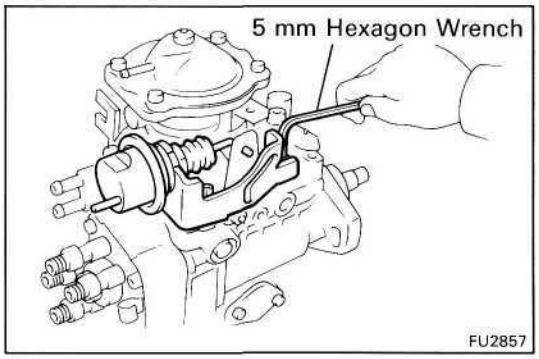

35. (w/ **PCS)**
INSTALL PCS ACTUATOR

(a) Using a 5 mm hexagon wrench, install the PCS actuator assembly with the two bolts.

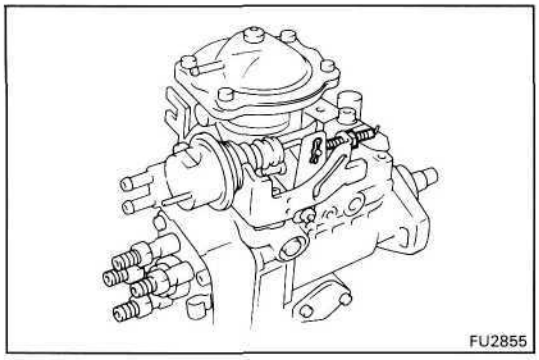

(b) Install the clip.

(c) Install the PCS adjusting screw.

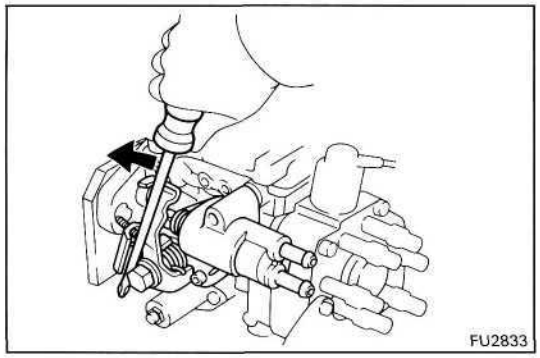

36. (w/ ACSD)
INSTALL THERMO WAX

(a) Using a screwdriver, turn the cold starting lever counterclockwise approx. 20°.

(b) Put a metal plate (thickness of 3.5-7.5 mm (0.138-0.295 in.)) between the cold starting lever and thermo wax plunger.

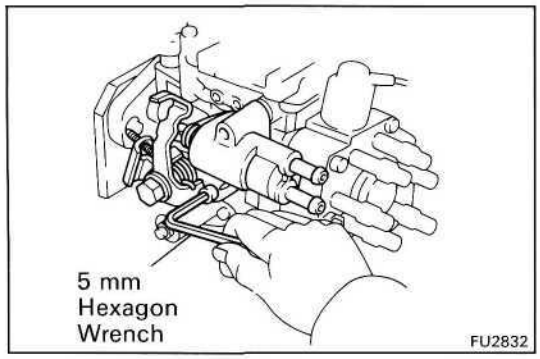

(c) Install a new O-ring and the thermo wax with the two bolts.

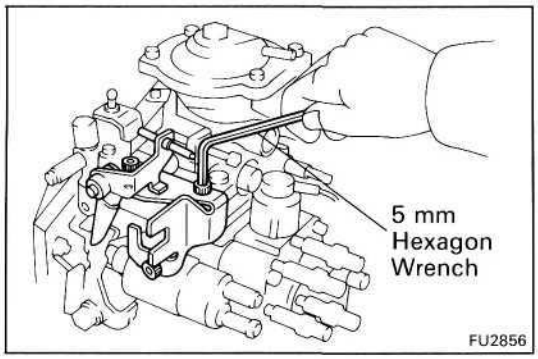

37. (w/ ACSD)
INSTALL IDLE-UP LEVER

Using a 5 mm hexagon wrench, install the idle-up lever with the three bolts.

38. (w/ A/C)
INSTALL IDLE-UP ACTUATOR

39. REMOVE INJECTION PUMP FROM SST (STAND)

SST 09241 -76022 and 09245-54010

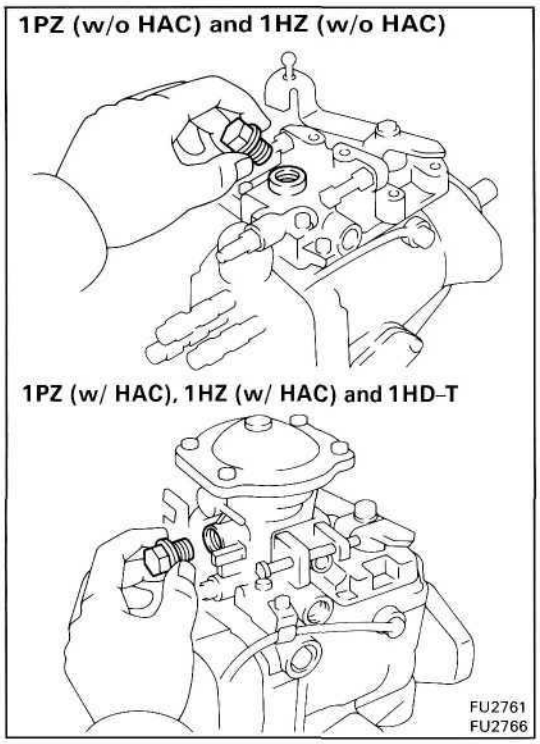

40. PERFORM AIR TIGHT TEST

(a) Install a bolt to the overflow port.

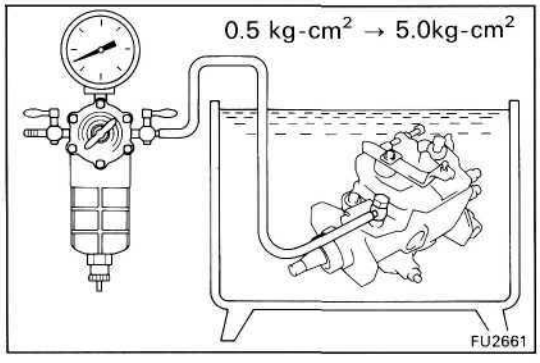

(b) Connect an air hose to the fuel inlet pipe and place the injection pump into diesel fuel.

(c) Apply 0.5 kg/cm^2 (7 psi, 49 kPa) of pressure and confirm that there are no leaks.

(d) Next check that there are no leaks with 5.0 kg/cm^2 (71 psi, 490 kPa) of pressure applied.

41. INSTALL SET KEY OF INJECTION PUMP DRIVE PULLEY ON DRIVE SHAFT

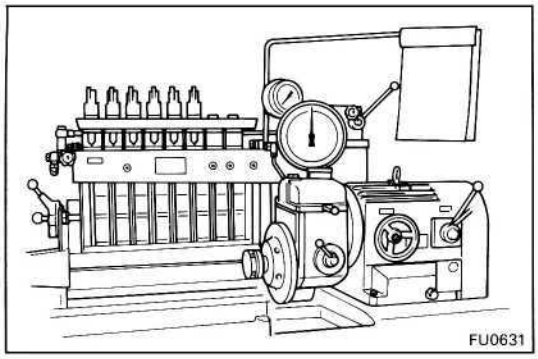
FU0631

ADJUSTMENT OF INJECTION PUMP

1. PRETEST CHECK AND PREPARATION

(a) The specifications for test nozzle and nozzle holders are as follows.

Test nozzle: DN12SD12 (NIPPONDENSO)

Test nozzle opening pressure:
145-155 kg/cm^2
(2,062- 2,205 psi, 14,220-15,200 kPa)

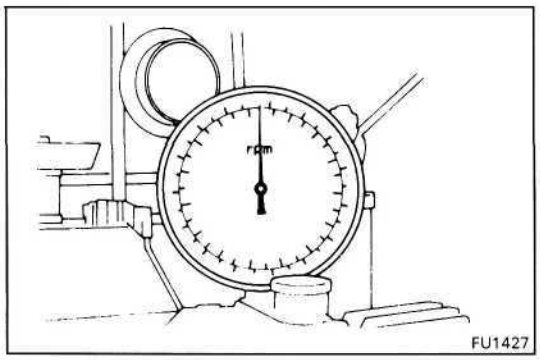

FU1427

(b) Check the accuracy of the tachometer.

Allowable error: ± 40 rpm

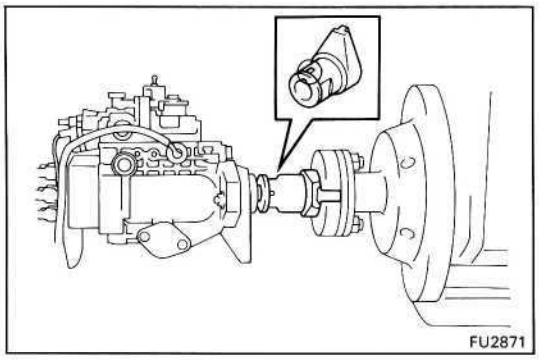
FU2871

(c) Install the angle gauge stand.

(d) Mount the injection pump body on the pump tester.

HINT: Place a mark on the key groove portion of the coupling.

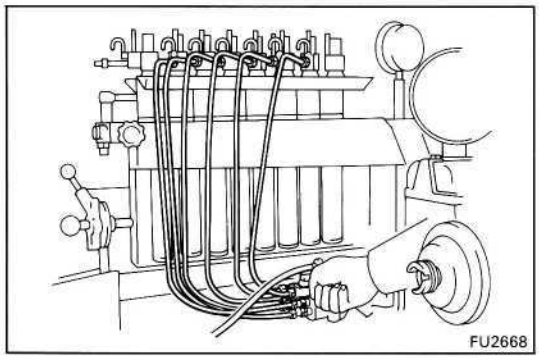
FU2668

(e) Install an injection pipe with the following specifications.

Outer diameter:	**6.0 mm (0.236 in.)**
Inner diameter:	**2.0 mm (0.079 in.)**
Length:	**840 mm (33.07 in.)**
Minimum bending radius:	**25 mm (0.98 in.) or more**

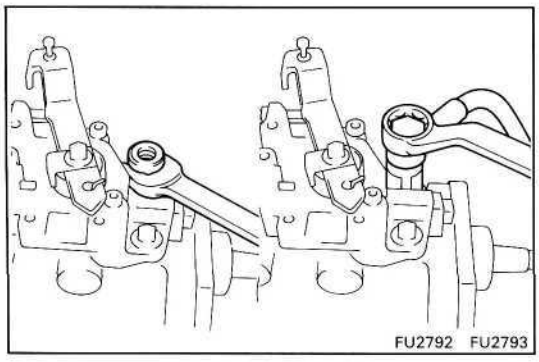
FU2792 FU2793

(f) Remove the fuel inlet hollow screw.

(g) Connect the fuel inlet pipe with an adapter.

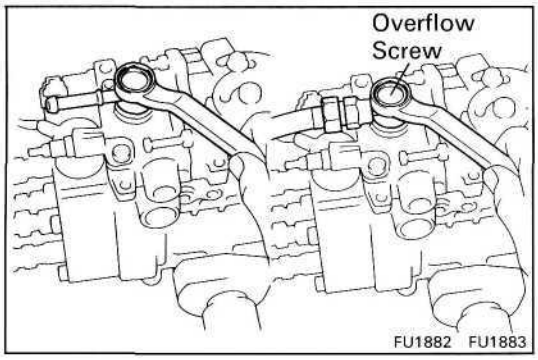

(h) Install the overflow hose with the overflow screw.

HINT: Always use the overflow screw installed on the pump to be adjusted.

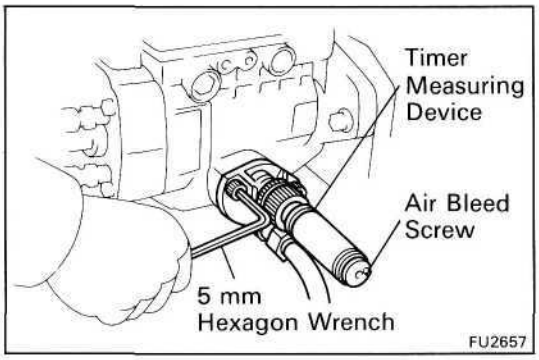

(i) Using a 5 mm hexagon wrench, remove the two bolts and RH timer cover.

(j) Install the inner pressure gauge with the timer measuring device.

Part No. 95095-10220 and 95095-10231

(NIPPONDENSO)

HINT: Bleed the air by the air bleed screw.

(k) (1HD-T)
Connect SST (turbocharger pressure gauge) to the boost compensator.

SST 09992-00241

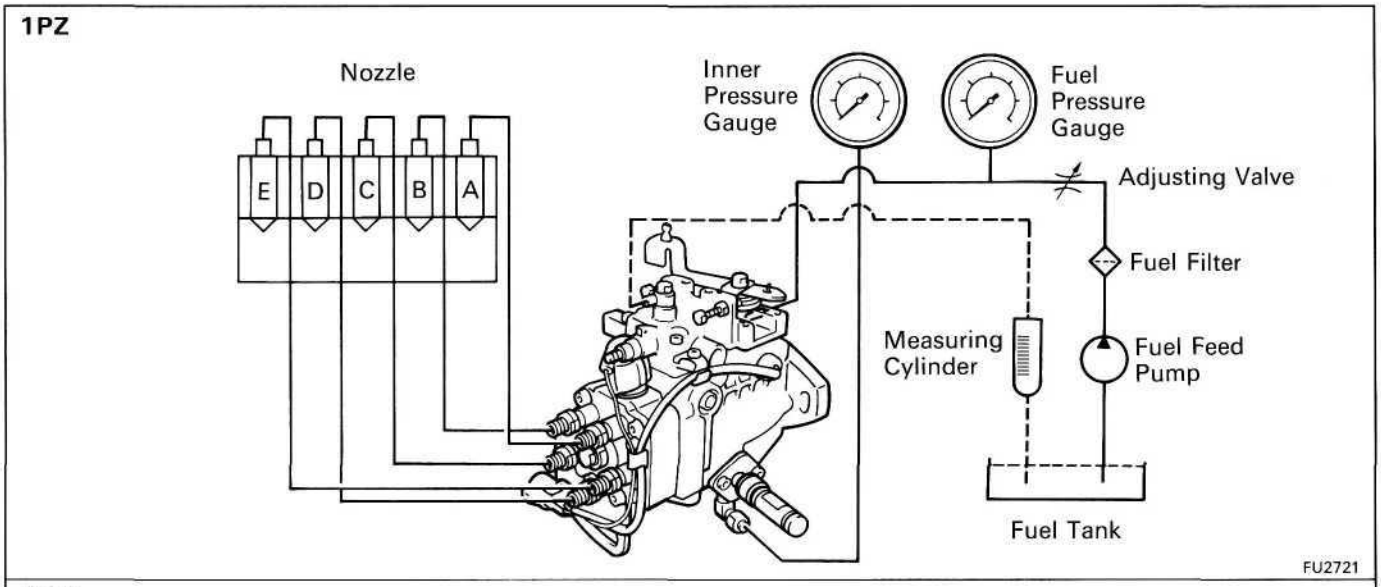

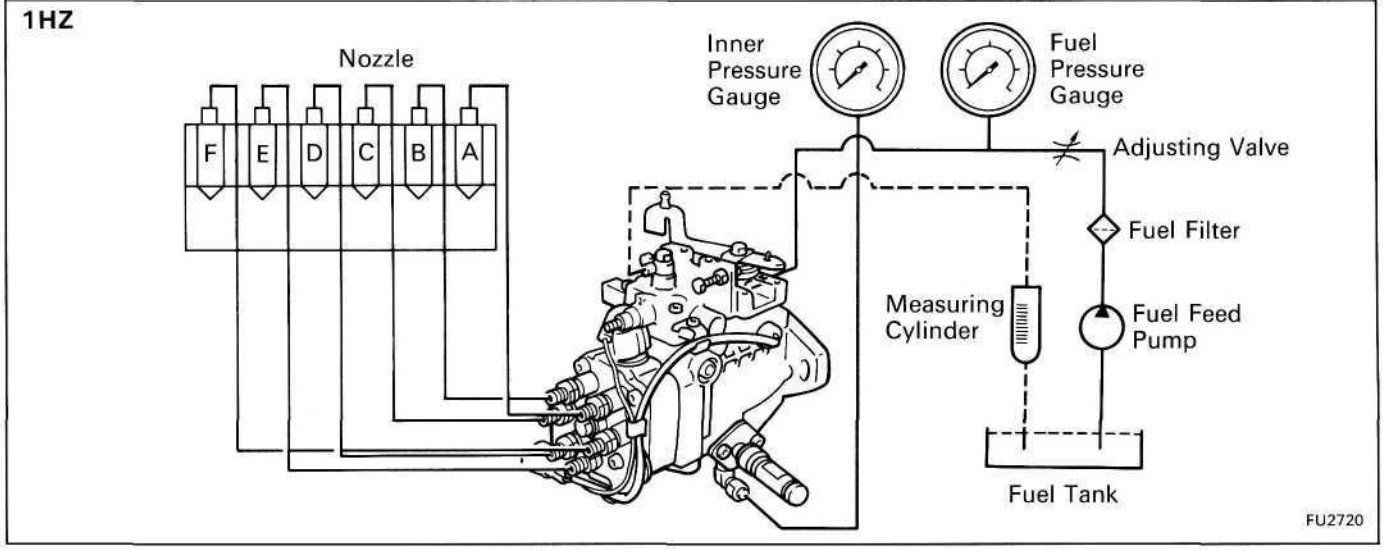

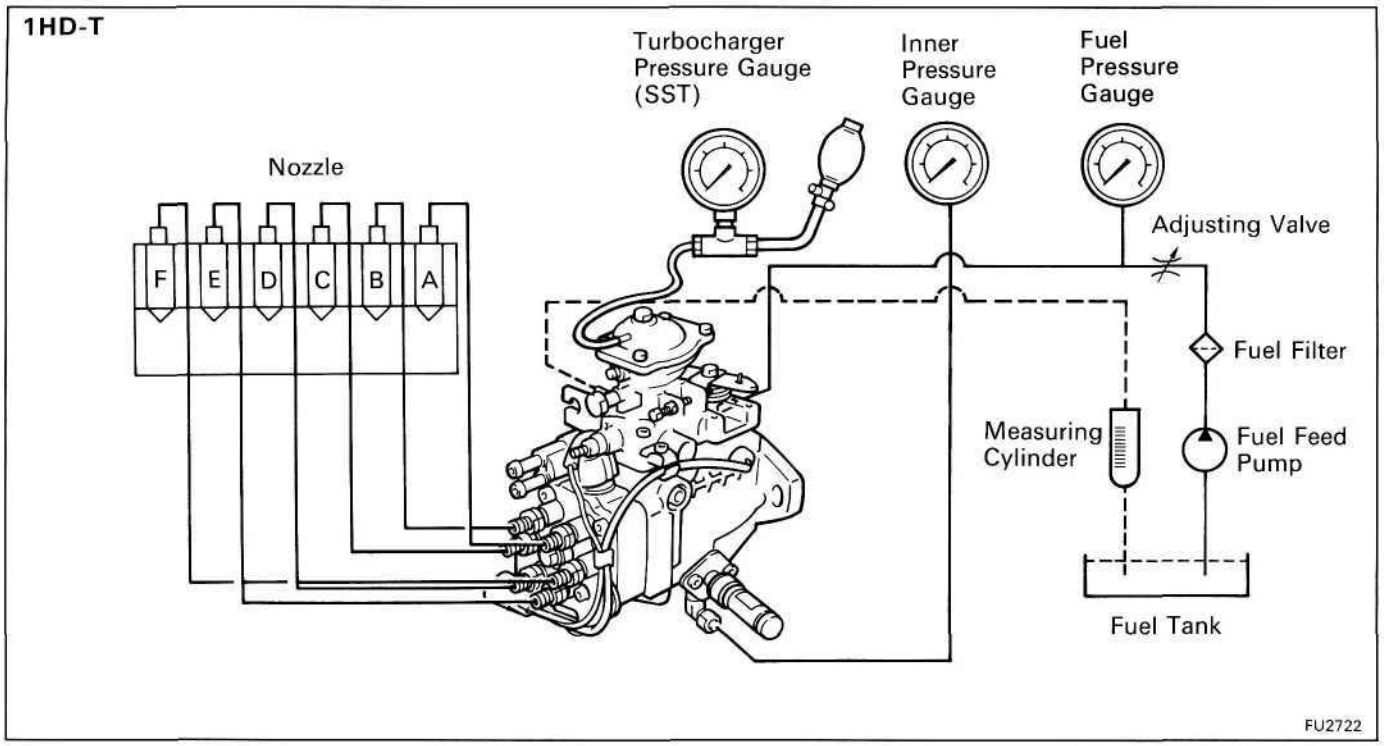

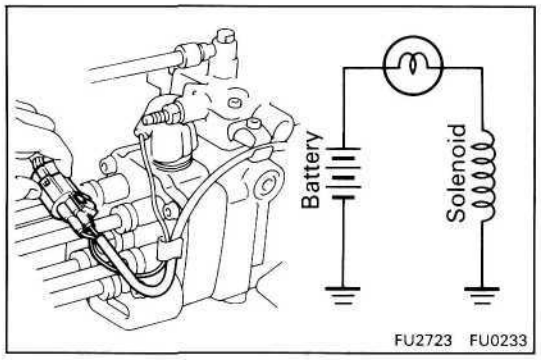

(l) (12 V type)
Apply approx. 6 volts of DC power to the fuel cut solenoid.

(m) (24 V type)
Apply approx. 12 volts of DC power to the fuel cut solenoid.

NOTICE:

- **When applying voltage to the solenoid, position the battery as far away from the solenoid as possible so that a spark does not occur.**
- **When connecting the battery cable, connect the solenoid side first.**

(n) The pressure for feeding fuel to the injection pump should be 0.2 kg/cm^2 (2.8 psi, 20 kPa). The fuel temperature for pump testing should be 40-45°C (104-113°F).

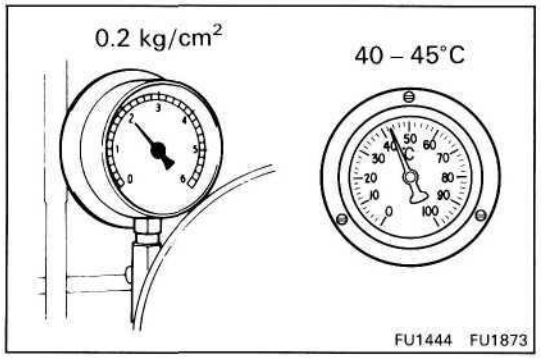

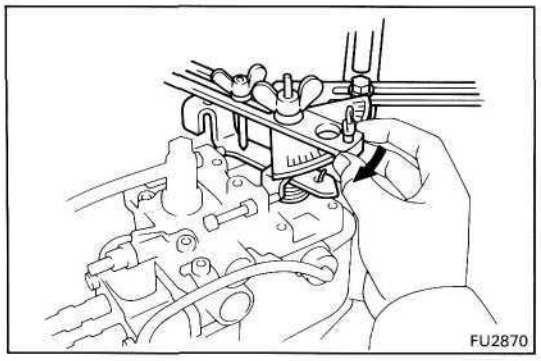

(o) Install an angle gauge to the stand and set it to the adjusting lever.

(p) Secure the adjusting lever fully on the maximum speed side.

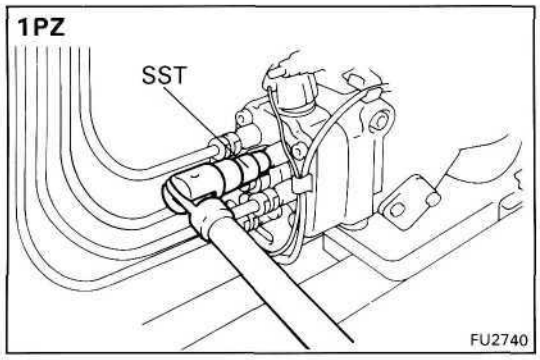

(q) Check the installation direction of the camplate as follow:

- (1PZ)
  Disconnect the injection pipe from the position marked "A" on the distributive head.

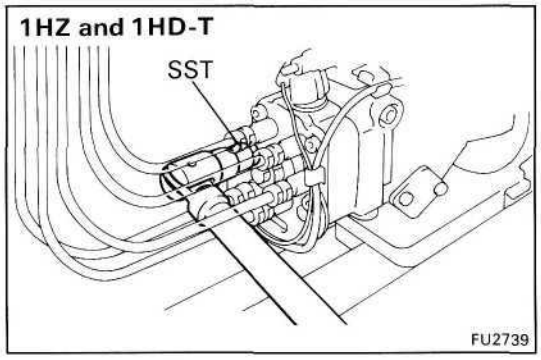

- (1 HZ and 1HD-T)
  Disconnect the injection pipe from the position marked "C" on the distributive head.
- Using SST, remove the delivery valve holder.

SST 09260-54012 (09269-54020)

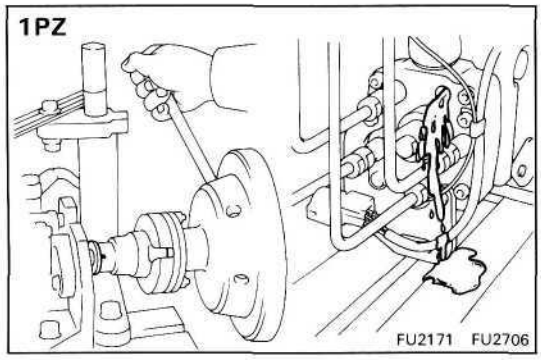

- Check that fuel is flowing out when the mark is in the position shown in the illustration.

If not, it is improperly assembled.

- Disassemble and change the camplate position 180° in the opposite direction.

HINT: At this time, disconnect the fuel cut solenoid wire harness.

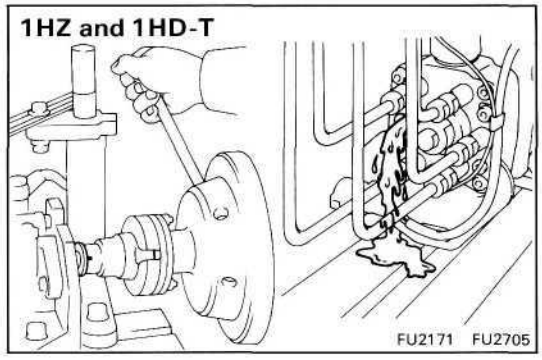

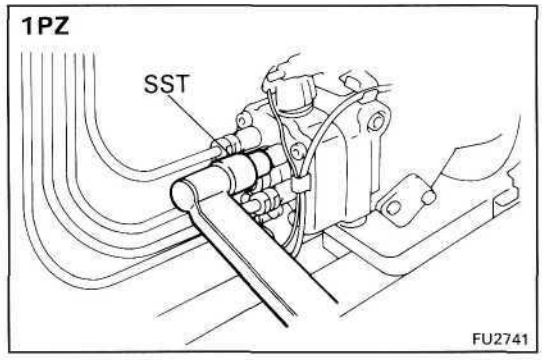

- Using SST, install the delivery valve holder.

SST 09260-5401 2 (09269-54020)

- Connect the injection pipe.

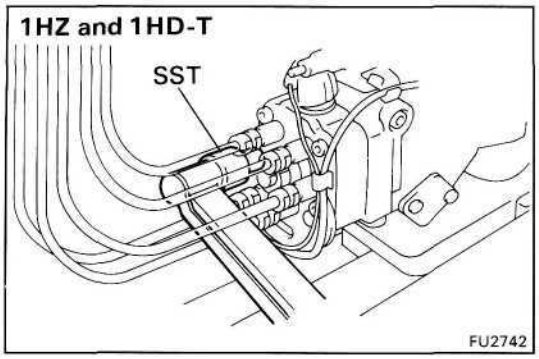

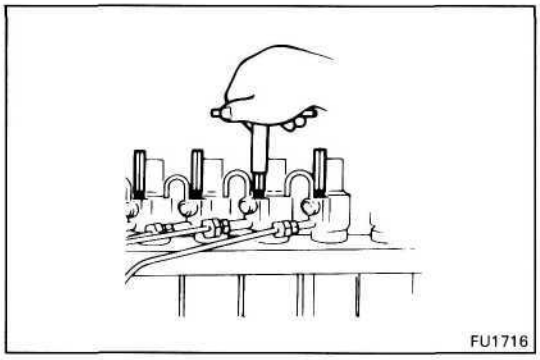

(r) Bleed the air from the injection pipes.

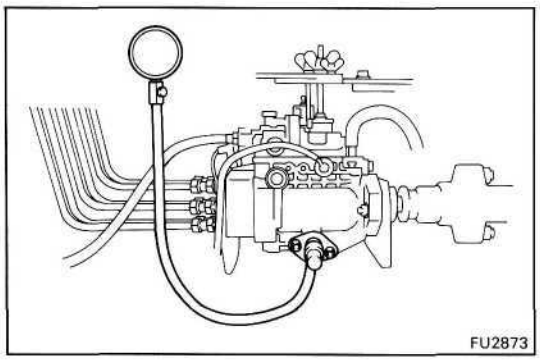

(s) Race the injection pump for 5 minutes at 2,000 rpm.

NOTICE: Check that there is no fuel leakage or abnormal noise.

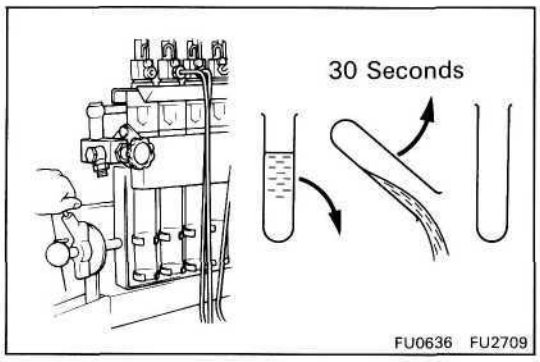

HINT:

- Measure the volume of each injection cylinder with a measuring cylinder.
- Before measuring the injection volume first hold the cylinder tilted for at least 30 seconds to discard all the fuel.

2. PRESET FULL LOAD INJECTION VOLUME

(a) Set the adjusting lever to maximum position.

(b) (1PZ (w/ HAC) and 1 HZ (w/ HAC))
Apply 760 ± 1.5 mmHg (29.92 ± 0.06 in.Hg, 101.3 ± 0.2 kPa) absolute pressure.

(c) (1HD-T (w/o BACS))
Apply 0.81 kg/cm^2 (11.5 psi, 79 kPa) of pressure to the boost compensator.

(d) (1HD-T (w/ BACS))
Apply 1.29 kg/cm^2 (18.3 psi, 127 kPa) of pressure to the boost compensator.

(e) (1HD-T (w/ PCS))
Apply vacuum to the PCS actuator.

(f) Measure the injection volume.

Item	Pump rpm	No. of measuring strokes	Injection volume cc (cu in.)
1PZ	1,200	200	11.78 – 12.18 (0.72 – 0.74)
1HZ	1,200	200	11.80 – 12.20 (0.72 – 0.74)
1HD-T (w/o BACS)	1,800	200	13.58 – 14.18 (0.83 – 0.87)
1HD (w/ BACS)	1,800	200	13.14 – 13.74 (0.80 – 0.84)

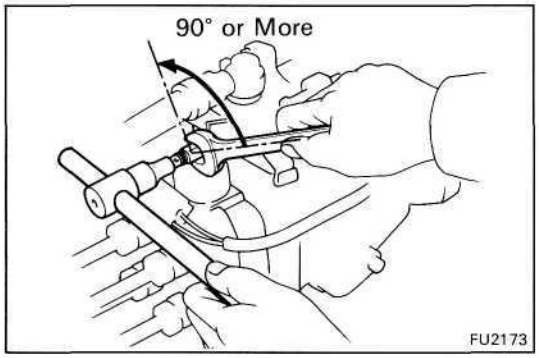

(g) Remove the collar seal as follows:

- Hold the full load set screw, and release the collar seal from the spot weld by turning the lock nut counterclockwise by 90° or more.

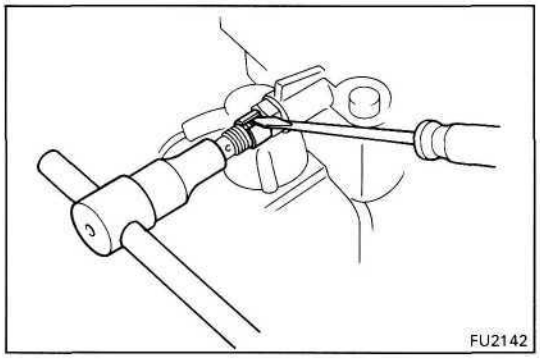

- Using a screwdriver, remove the collar seal.

(h) (w/ Wire Seal Type)
Cut off the wire seal.

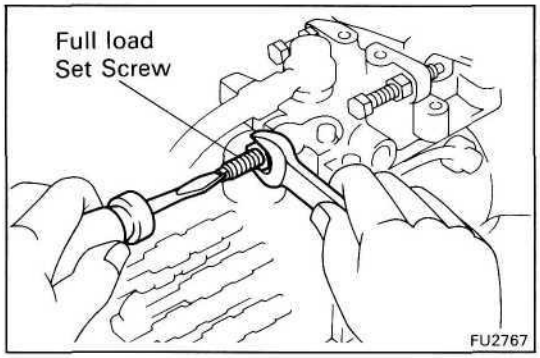

(i) Adjust by turning the full load set screw.

HINT: The injection volume will increase about 3 cc (0.18 cu in.) with each 1/2 turn of the screw.

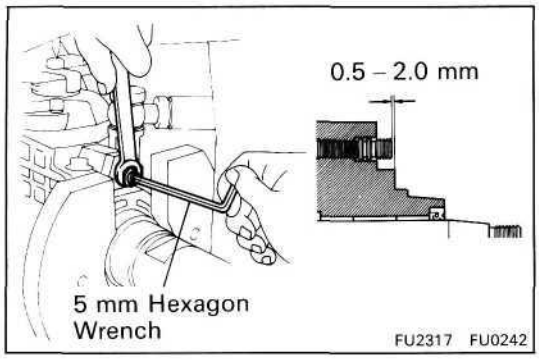

3. (w/o HIGH ALTITUDE)
PRE-SETTING OF LOAD SENSING TIMER

Using a 5 mm hexagon wrench, adjust the protrusion of the governor shaft.

Protrusion: 0.5-2.0 mm (0.020-0.079 in.)

4. PRESET MAXIMUM SPEED

(a) Set the adjusting lever to maximum position.

(b) (1 PZ (w/ HAC) and 1 HZ (w/ HAC))
Apply 760 ± 1.5 mmHg (29.92 ± 0.06 in.Hg, 101.3 ± 0.2 kPa) absolute pressure.

(c) (1HD-T (w/o BACS))
Apply 0.81 kg/cm^2 (11.5 psi, 79 kPa) of pressure to the boost compensator.

(d) (1HD-T (w/ BACS))
Apply 1.29 kg/cm^2 (18.3 psi, 1 27 kPa) of pressure to the boost compensator.

(e) (1HD-T (w/ PCS))
Apply vacuum to the PCS actuator.

(f) Measure the injection volume.

Item	Pump rpm	No. of measuring strokes	Injection volume cc (cu in.)
1PZ	2,300	200	4.0 – 6.0 (0.24 – 0.37)
1HZ	2,300	200	3.0 – 5.0 (0.18 – 0.31)
1HD-T	2,200	200	3.0 – 5.0 (0.18 – 0.31)

(g) Cut off the seal wire.

(h) Adjust the injection volume with the maximum speed adjusting screw.

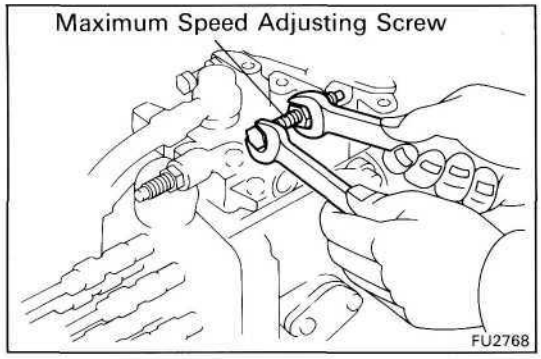

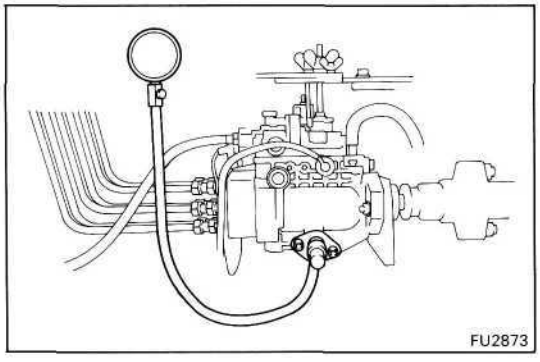

5. ADJUST PUMP INNER PRESSURE

(a) Measure the pump inner pressure at the below listed rpm.

Item	Pump rpm	Inner pressure kg/cm² (psi, kPa)
1PZ	500	2.45 – 3.05 (35 – 43, 240 – 299)
	2,000	6.4 – 7.0 (91 – 100, 628 – 686)
1HZ	500	2.5 – 3.1 (36 – 44, 245 – 304)
	2,000	7.1 – 7.7 (101 – 110, 696 – 755)
1HD-T (w/o BACS)	400	2.2 – 3.1 (31 – 44, 216 – 304)
	1,900	8.1 – 8.4 (115 – 119, 794 – 824)
	2,200	9.0 (128, 883) or less
1HD-T (w/ BACS)	400	2.7 – 3.6 (38 – 51, 265 – 353)
	2,200	8.7 – 9.0 (124 – 128, 853 – 893)

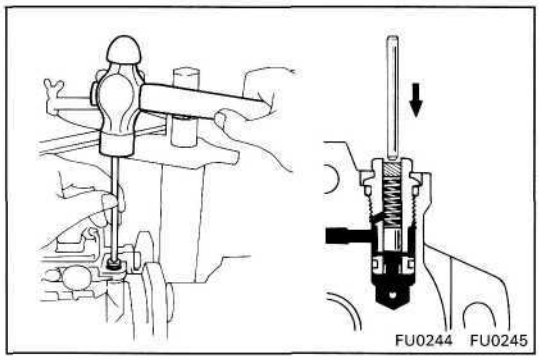
FU0244 FU0245

(b) If the pressure is low, adjust by lightly tapping the regulator valve piston while watching the pressure gauge.

HINT: If the pressure is too high or if the regulator valve was tapped in too far, the regulator valve must be replaced.

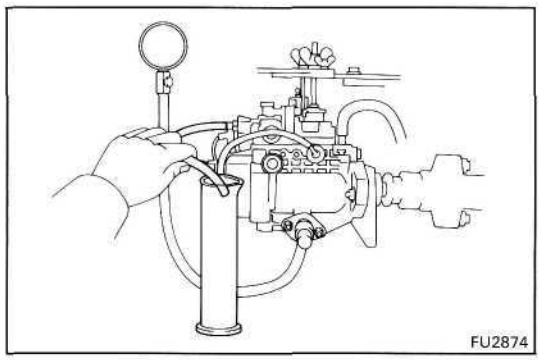
FU2874

6. CHECK OVERFLOW VOLUME

Measure the overflow volume at the below listed rpm.

Item	Pump rpm	Overflow volume cc/min. (cc in./min.)
1PZ and 1HZ	2,000	366 – 800 (22.3 – 48.8)
1HD-T	1,900	583 – 1,083 (35.6 – 66.1)

HINT: Always use the overflow screw installed on the pump to be adjusted.

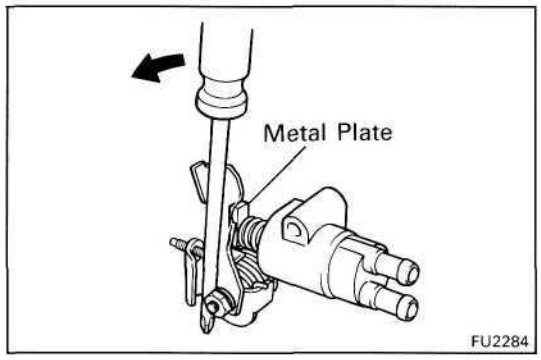

FU2284

7. (w/ ACSD)
RELEASE COLD STARTING SYSTEM FOR NEXT INSPECTIONS

(a) Using a screwdriver, turn the cold starting lever counterclockwise approx. 20°.

(b) Put a metal plate (thickness of 3.5-7.5 mm (0.138-0.295 in.)) between the cold starting lever and thermo wax plunger.

HINT: Keep the cold starting system released until all measurements and adjustments are finished.

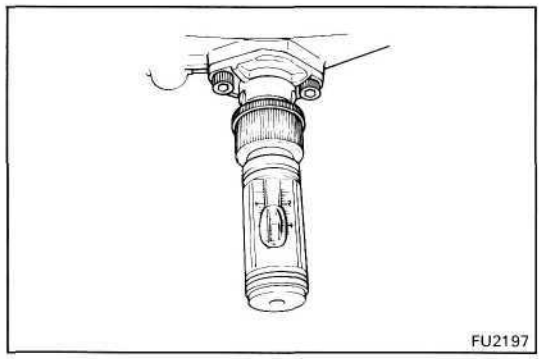
FU2197

8. ADJUST TIMER

(a) Set the timer measuring device at zero.

(b) Measure the timer piston stroke at the below listed rpms.

Item	Pump rpm	Timer piston stroke mm (in.)
1PZ	600	0.58 – 1.58 (0.0288 – 0.0622)
	1,200	3.02 – 4.02 (0.1189 – 0.1583)
	1,600	4.65 – 5.65 (0.1830 – 0.2224)
	2,000	6.28 – 7.28 (0.2472 – 0.2866)
	2,500	6.88 – 7.88 (0.2709 – 0.3102) (LST non-opeational)
1HZ	600	0.43 – 1.43 (0.0169 – 0.0563)
	1,200	3.23 – 4.23 (0.1272 – 0.1665)
	1,600	5.09 – 6.09 (0.2004 – 0.2398)
	2,000	6.88 – 7.88 (0.2709 – 0.3102)
	2,500	6.88 – 7.88 (0.2709 – 0.3102) (LST non-opeational)
1HD-T (Europe)	1,300	1.4 – 2.4 (0.055 – 0094)
	1,440	3.0 – 4.0 (0.118 – 0.157)
	1,700	5.9 – 6.9 (0.232 – 0.272)
	1,900	7.7 – 8.7 (0.303 – 0.343)
1HD-T (Others)	800	1.05 – 2.05 (0.0413 – 0.0807)
	1,400	4.9 – 5.9 (0.193 – 0.232)
	1,700	6.42 – 7.42 (0.2528 – 0.2921)
	1,900	7.7 – 8.7 (0.303 – 0.343)

HINT: Check that the hysteresis is within 0.3 mm (0.012 in.)

(c) Using a 5 mm hexagon wrench, adjust by the timer adjusting screw.

HI NT: The stroke will decrease with turn to clockwise and increase with turn to counterclockwise.

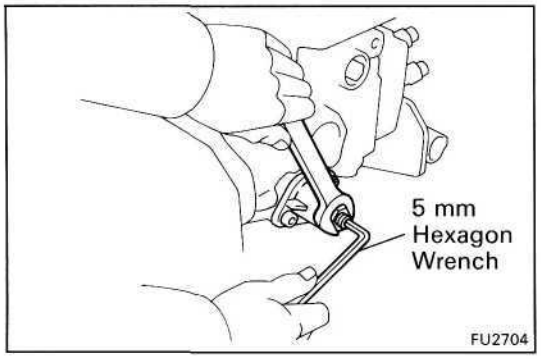

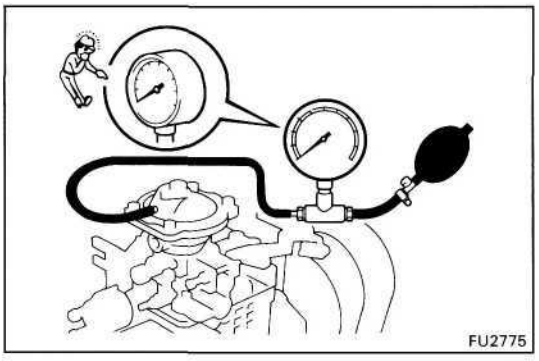

9. (1HD-T)
CHECK AIR TIGHTNESS OF BOOST COMPENSATOR

(a) Apply 1.00 kg/cm^2 (14.2 psi, 98 kPa) of pressure to the boost compensator.

(b) Measure the time it takes for the pressure to drop to 0.97 kg/cm^2 (13.8 psi, 95 kPa).

Pressure drop: 10 seconds or more

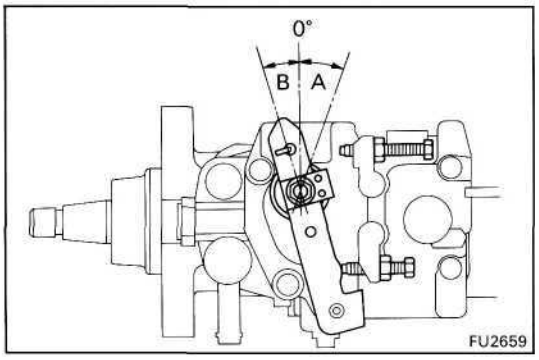

10. ADJUST FULL LOAD INJECTION VOLUME

(a) The adjusting lever angle for the adjustment below should be as shown in the illustration.

Adjusting lever angle	
A (Maximum speed side)	B (Idle speed side)
Plus 21 – 31°	Minus 12 – 22°

(b) (1 PZ (w/ HAC) and 1 HZ (w/ HAC))
Apply 760 ± 1.5 mmHg (29.92 ± 0.06 in.Hg, 101.3 ± 0.2 kPa) absolute pressure.

(c) (1HD-T (w/o BACS))
Apply 081 kg/cm^2 (11.5 psi, 79 kPa) of pressure to the boost compensator.

(d) (1HD-T (w/ BACS))
Apply 1.29 kg/cm^2 (18.3 psi, 1 27 kPa) of pressure to the boost compensator.

(e) (1HD-T (w/ PCS))
Apply vacuum to the PCS actuator.

(f) Measure the full load injection volume.

Item	Adjusting lever angle	Pump rpm	No. of measuring strokes	Injection volume cc (cc in.)
1PZ	Plus 21 – 31°	1,200	200	11.78 – 12.18 (0.72 – 0.74)
1HZ	Plus 21 – 31°	1,200	200	11.80 – 12.20 (0.72 – 0.74)
1HD-T (w/o BACS)	Plus 21 – 31°	1,100	200	13.58 – 14.18 (0.83 – 0.87)
1HD-T (w/ BACS)	Plus 21 – 31°	1,100	200	13.14 – 13.74 (0.80 – 1.84)

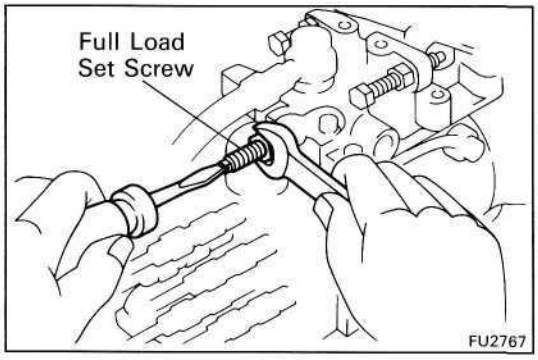

(g) Adjust by turning the full load set screw.

HINT: The injection volume will increase about 3 cc (0.18 cu in.) with each 1/2 turn of the screw.

(h) (1HD-T (w/ PCS))
Release the vacuum to the PCS actuator.

(i) (1HD-T (w/PCS))
Measure the injection volume.

Pump rpm	No. of measuring strokes	Injection volume cc (cu in.)
1,100	200	11.0 – 12.2 (0.67 – 0.74)

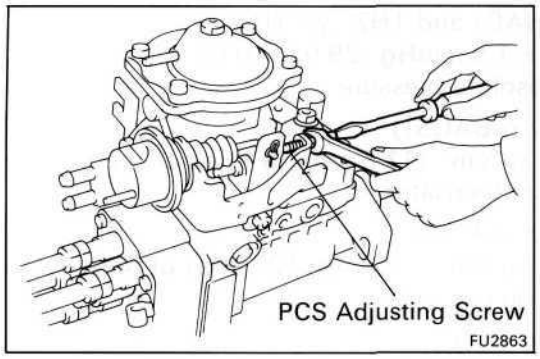

(j) (1HD-T(w/ PCS))
Adjust by turning the PCS adjusting screw.

HINT: By screwing in the adjusting screw, the injection volume is increased; unscrewing the adjusting screw decreases the injection volume.

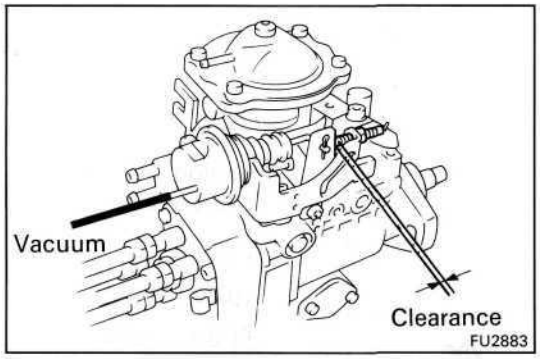

(k) (1HD-T (w/PCS))
Apply vacuum to the PCS actuator and check that the clearance between No.1 PCS lever and adjusting screw at least 3 mm (0.12 in.).

11. ADJUST MAXIMUM SPEED

(a) (1PZ (w/HAC) and 1HZ (w/HAC))
Apply 760 ± 1.5 mmHg (29.92 ± 0.06 in.Hg, 101.3 ± 0.2 kPa) absolute pressure.

(b) (1HD-T (w/o BACS))
Apply 0.81 kg/cm^2 (11.5 psi, 79 kPa) of pressure to the boost compensator.

(c) (1HD-T (w/ BACS))
Apply 1.29 kg/cm^2 (18.3 psi, 127 kPa) of pressure to the boost compensator.

(d) (1HD-T (w/ PCS))
Apply vacuum to the PCS actuator.

(e) Measure the injection volume at each pump rpm.

Item	Adjusting lever angle	pump rmp	No. of measuring strokes	Injection volume cc (cu in.)	Remarks
1PZ	Plus 21 – 31°	2,300	200	4.0 – 6.0 (0.24 – 0.37)	Adjust
		2,500		1.0 (0.06) or less	–
1HZ	Plus 21 – 31°	2,300	200	3.0 – 5.0 (0.18 – 0.31)	Adjust
		2,550		1.0 (0.06) or less	–
1HD-T	Plus 21 – 31°	2,200	200	3.0 – 5.0 (0.18 – 0.31)	Adjust
		2,350		1.0 (0.06) or less	–

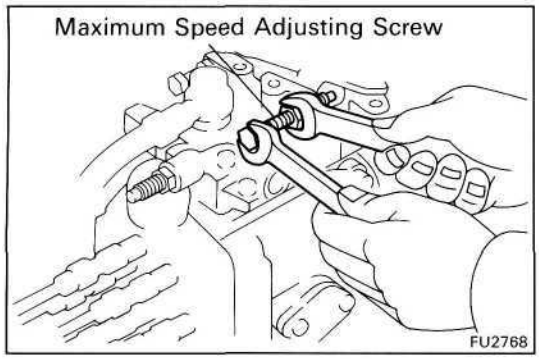

(f) Adjust by turning the maximum speed adjusting screw.

12. CHECK INJECTION VOLUME

(a) (1 PZ (w/ HAC) and 1 HZ (w/ HAC))
Apply 760 ± 1.5 mmHg (29.92 ± 0.06 in.Hg, 101.3 ± 0.2 kPa) absolute pressure.

(b) (1PZand1HZ)
Measure the injection volume at each pump rpm.

Item	Adjusting lever angle	Pump rpm	No. of measuring strokes	Injection volume cc (cu in.)	Variation limit cc (cu in.)	Remarks
1PZ	Plus 21 – 31°	1,200	200	11.78 – 12.18 (0.72 – 0.74)	0.4 (0.02)	Basic full-load injection volume
		100		9.60 – 14.40 (0.59 – 0.88)	1.2 (0.07)	Volume during starting
		500		10.56 – 11.76 (0.64 – 0.72)	0.6 (0.04)	–
		2,000		11.62 – 12.82 (0.71 – 0.78)	0.6 (0.04)	–
1HZ	Plus 21 – 31°	1,200	200	11.80 – 12.20 (0.72 – 0.74)	0.4 (0.03)	Basic full-load injection volume
		100		9.60 – 14.40 (0.59 – 0.88)	1.2 (0.07)	Volume during starting
		500		9.74 – 10.94 (0.59 – 0.67)	0.6 (0.04)	–
		2,000		10.96 – 12.16 (0.67 – 0.74)	0.6 (0.04)	–

(c) (1HD-T (w/ PCS))
Apply vacuum to the PCS actuator.

(d) (1HD-T)
Measure the injection volume at each pump rpm and boost pressure.

Item	Adjusting lever angle	Pump rpm	Boost pressure kg/cm² (psi, kPa)	No. of measuring strokes	Injection volume cc (cu in.)	Variation limit cc (cu in.)	Remarks
1HD-T (Europe)	Plus 21 – 31°	1,100	0.81 (11.5, 79)	200	13.52 – 14.72 (0.83 – 0.90)	0.6 (0.04)	Basic full-load injection volume
		100	0 (0, 0)		11.60 – 16.40 (0.71 – 1.00)	1.2 (0.07)	Volume during starting
		500	0 (0, 0)		8.32 – 9.12 (0.51 – 0.56)	0.6 (0.04)	–
		1,800	0.81 (11.5, 79)		13.58 – 14.18 (0.83 – 0.87)	1.2 (0.07)	–
1HD-T (Others) (w/o BACS)	Plus 21 – 31°	1,100	0.81 (11.5, 79)	200	11.70 – 12.90 (0.71 – 0.79)	0.6 (0.04)	Basic full-load injection volume
		100	0 (0, 0)		11.60 – 16.40 (0.71 – 1.00)	1.2 (0.07)	Volume during starting
		500	0 (0, 0)		8.68 – 9.48 (0.53 – 0.58)	0.6 (0.04)	–
		1,800	0.81 (11.5, 79)		13.58 – 14.18 (0.83 – 0.87)	1.2 (0.07)	–
1HD-T (Others) (w/ BACS)	Plus 21 – 31°	1,100	1.29 (18.3, 127)	200	11.70 – 12.90 (0.71 – 0.79)	0.6 (0.04)	Basic full-load injection volume
		100	0.50 (7.1, 49)		11.60 – 16.40 (0.71 – 1.00)	1.2 (0.07)	Volume during starting
		500	0.50 (7.1, 49)		8.20 – 9.20 (0.50 – 0.56)	0.6 (0.04)	–
		1,800	1.29 (18.3, 127)		13.14 – 14.74 (0.80 – 0.84)	1.2 (0.07)	–

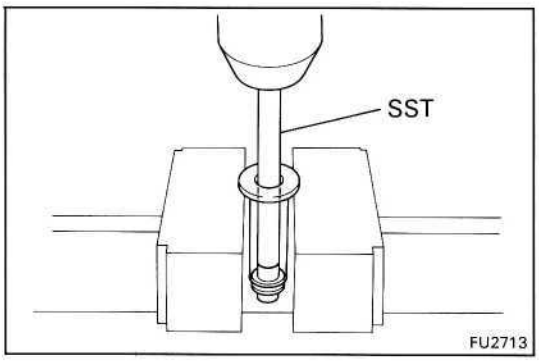

If the injection volume at 100 rpm is not as specified, replace the governor sleeve plug as follows:

- Using SST and a press, press out the sleeve plug assembly from the governor sleeve.

SST 09236-00101 (09237-00070)

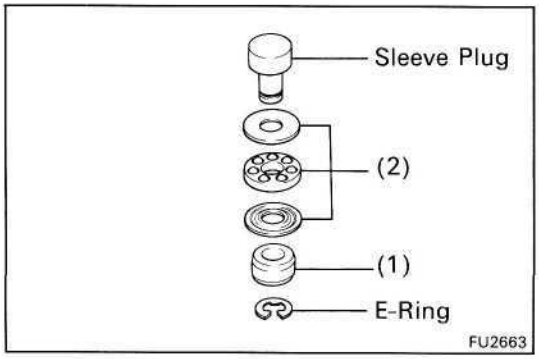

- Remove the E-ring and following parts from the sleeve plug:

(1) Stop ring

(2) Bearing and two bearing retainers

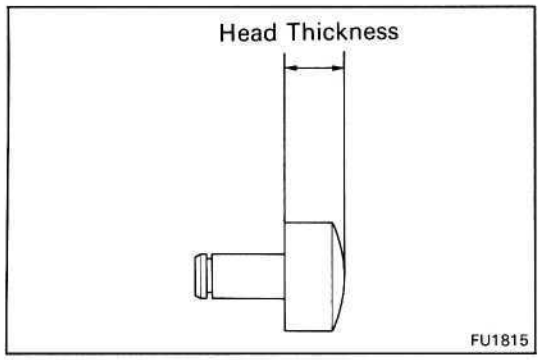

- Measure the head thickness of the sleeve plug, and select a new sleeve plug.

Sleeve plug head thichness for 1PZ and 1HZ mm (in.)		
3.0 (0.118)	3.5 (0.138)	4.0 (0.158)
3.1 (0.122)	3.6 (0.142)	4.1 (0.161)
3.2 (0.126)	3.7 (0.146)	4.2 (0.165)
3.3 (0.130)	3.8 (0.150)	
3.4 (0.134)	3.9 (0.154)	

Sleeve plug head thichness for 1HD-T mm (in.)		
3.0 (0.118)	4.3 (0.169)	5.6 (0.220)
3.1 (0.122)	4.4 (0.173)	5.7 (0.224)
3.2 (0.126)	4.5 (0.177)	5.8 (0.228)
3.3 (0.130)	4.6 (0.181)	5.9 (0.232)
3.4 (0.134)	4.7 (0.185)	6.0 (0.236)
3.5 (0.138)	4.8 (0.189)	6.1 (0.240)
3.6 (0.142)	4.9 (0.193)	6.2 (0.244)
3.7 (0.146)	5.0 (0.197)	6.3 (0.248)
3.8 (0.150)	5.1 (0.201)	6.4 (0.252)
3.9 (0.154)	5.2 (0.205)	6.5 (0.256)
4.0 (0.158)	5.3 (0.209)	6.6 (0.260)
4.1 (0.161)	5.4 (0.213)	
4.2 (0.165)	5.5 (0.216)	

HINT: Lengthening the plug 0.1 mm (0.004 in.) will decrease injection volume by 0.6 cc (0.04 cu in.).

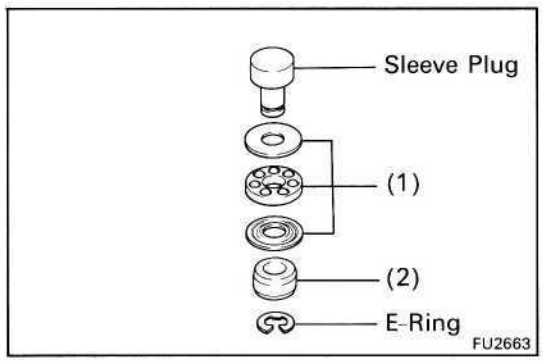

- Install the following parts to the new sleeve plug with a new E-ring:

(1) Bearing and two retainers

(2) Stop ring

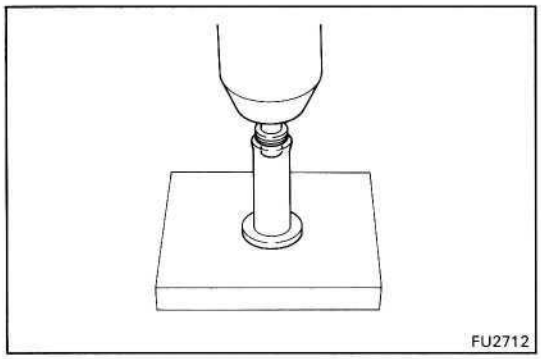

- Using a press, press in the sleeve plug assembly to the governor sleeve.

13. (1HD-T)
ADJUST FULL LOAD MINIMUM INJECTION VOLUME

(a) Measure the injection volume.

Item	Pump rpm	No. of measuring strokes	Injection volume cc (cu in.)
Europe	500	200	8.32 – 9.12 (0.51 – 0.56)
Others (w/o BACS)	500	200	8.68 – 9.48 (0.53 – 0.58)
Others (w/ BACS)	500	200	7.54 – 8.34 (0.46 – 0.51)

(b) Using a hexagon wrench, adjust the tinner slide pin.

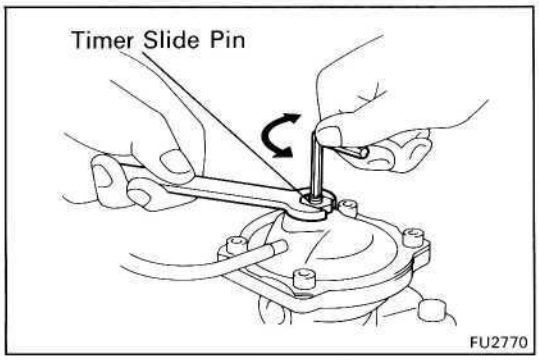

14. (1HD-T)
ADJUST BOOST COMPENSATOR CHARACTERISTIC

(a) Apply pressure to the boost compensator.

(b) Measure the injection volume bushing.

Item	Pump rpm	Boost pressure kg/cm^2 (psi, kPa)	No. of measuring strokes	Injection volume cc (cu in.)
Europe	1,100	0.48 (6.8, 47)	200	12.44 – 13.44 (0.76 – 0.82)
Others (w/o BACS)	1,100	0.54 (7.7, 53)	200	10.86 – 11.86 (0.66 – 0.72)
Others (w/ BACS)	500	0.50 (7.1, 49)	200	8.20 – 9.20 (0.50 – 0.56)

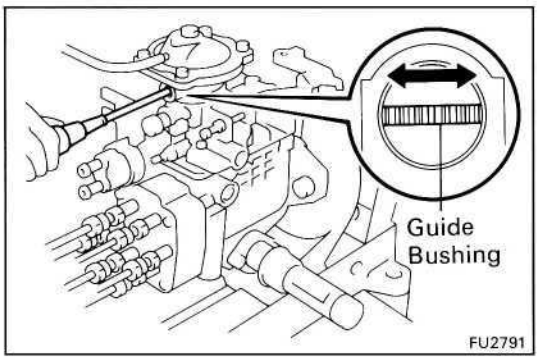

(c) Using a screwdriver, adjust the guide bushing.

HINT: When the guide bushing is turned clockwise, as seen from above, the injection volume will increase.

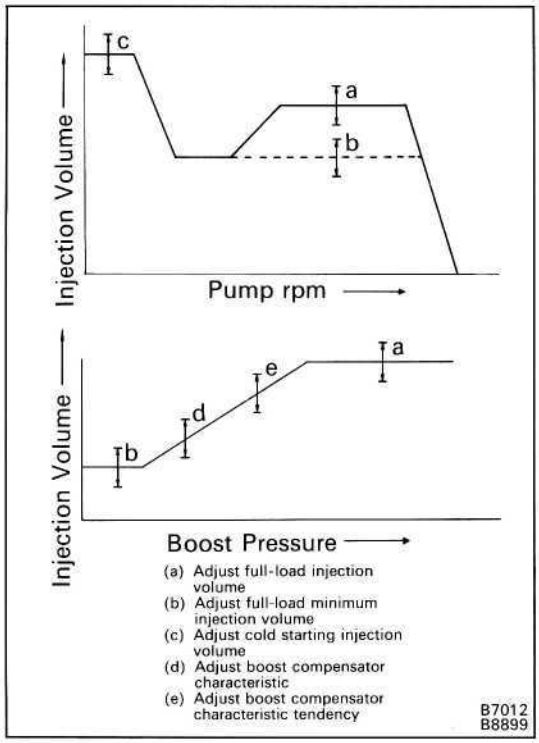

15. (1HD-T)
INSPECT BOOST COMPENSATOR CHARACTERISTIC TENDENCY

(a) Apply pressure to the boost compensator.

(b) Measure injection volume.

Item	Pump rpm	Boost pressure kg/cm^2 (psi, kPa)	No. of measuring strokes	Injection volume cc (cu in.)
Europe	1,100	0.27 (3.8, 26)	200	10.50 – 11.70 (0.64 – 0.71)
Others (w/o BACS)	1,100	0.41 (5.8, 40)	200	9.48 – 10.68 (0.58 – 0.65)
Others (w/ BACS)	500	0.81 (11.5, 79)	200	9.80 – 11.00 (0.60 – 0.67)

16. (1HD-T)
CHECK HYSTERESIS

(w/o BACS)

Compare the injection volume when the boost compensator pressure is lowered from 0.81 kg/cm^2 (11.5 psi, 79 kPa) to 0 kg/cm^2 (0 psi, 0 kPa) and, conversely, when it is raised from zero.

(w/ BACS)

Compare the injection volume when the boost compensator pressure is lowered from 1.25 kg/cm^2 (18.3 psi, 127 kPa) to 0 kg/cm^2 (0 psi, 0 kPa) and, conversely, when it is raised from zero.

HINT: Make measurements after moving the adjusting lever between idle and maximum three times for each lowering of the pressure.

Item	Pump rpm	Boost pressure kg/cm^2 (psi, kPa)	No. of measuring strokes	Injection volume cc (cu in.)	Hysteresis cc (cu in.)
Europe	1,100	0.81 (11.5, 79)	200	13.52 – 14.72 (0.82 – 0.90)	–
	1,100	0.48 (6.8, 47)	200	12.44 – 13.44 (0.76 – 0.82)	–
	1,100	0.27 (3.8, 26)	200	10.50 – 11.70 (0.64 – 0.71)	0.3 (0.02) or less
	1,100	0 (0, 0)	200	9.70 – 11.10 (0.59 – 0.68)	–
Others (w/o BACS)	1,100	0.81 (11.5, 79)	200	11.70 – 12.90 (0.71 – 0.79)	–
	1,100	0.54 (7.7, 53)	200	10.86 – 11.86 (0.66 – 0.72)	–
	1,100	0.41 (5.8, 40)	200	9.48 – 10.68 (0.58 – 0.65)	0.3 (0.02) or less
	1,100	0 (0, 0)	200	8.62 – 10.02 (0.53 – 0.61)	–

Cont'd

Item	Pump rpm	Boost pressure kg/cm² (psi, kPa)	No. of measuring strokes	Injection volume cc (cu in.)	Hysteresis cc (cu in.)
Others (w/ BACS)	1,100	1.29 (18.3, 127)	200	11.70 – 12.90 (0.71 – 0.79)	–
	500	0.81 (11.5, 79)	200	9.80 – 11.00 (0.60 – 0.67)	0.3 (0.02) or less
	500	0.50 (7.1, 49)	200	8.20 – 9.20 (0.50 – 0.56)	–
	500	0 (0, 0)	200	7.54 – 8.34 (0.46 – 0.51)	–

If not within standard value, check each sliding part of the boost compensator and check whether or not there is any oil.

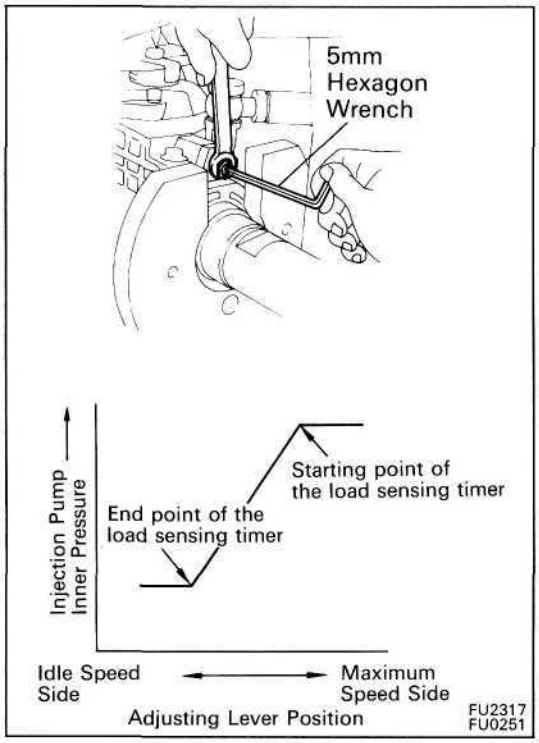

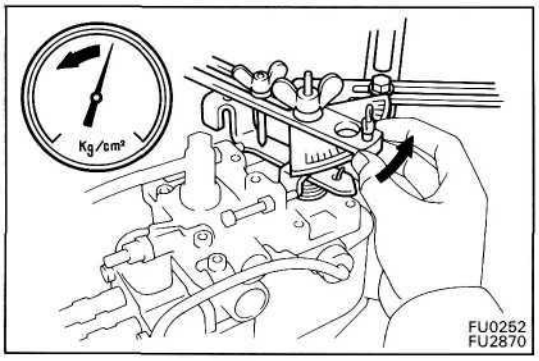

17. (w/o **HIGH ALTITUDE)**
ADJUST LOAD SENSING TIMER

(a) Using a 5 mm hexagon wrench, adjust the starting and end points of the load sensing timer by turning the governor shaft.

(b) (1 PZ (w/ HAC) and 1 HZ (w/ HAC))
Apply 760 ± 1.5 mmHg (29.92 ± 0.06 in.Hg, 101.3 ± 0.2 kPa) absolute pressure.

(c) (1HD-T (w/o BACS))
Apply 0.81 kg/cm² (11.5 psi, 79 kPa) of pressure to the boost compensator.

(d) (1HD-T (w/ BACS))
Apply 1.29 kg/cm² (18.3 psi, 127 kPa) of pressure to the boost compensator.

(e) (1HD-T (w/ PCS))
Apply vacuum to the PCS actuator.

(f) Measure the injection volume.

Item	Adjusting lever position	Pump rpm	No. of measuring strokes
1PZ, 1HZ	Maximum speed side	1,600	200
1HD-T		1,800	

(g) Slowly move the adjusting lever from the maximum speed side to the idle speed side, and secure it at the point where the pump inner pressure begins to drop.

(h) Measure the injection volume at the drop point (starting point).

Item	Pump rpm	No. of measuring strokes	Injection volume cc (cu in.)
1PZ	1,600	200	Measured value at step (f) minus 1.4 (0.09) ± 0.3 (0.02)
1HZ	1,600	200	Measured value at step (f) minus 1.4 (0.09) ± 0.3 (0.02)
1HD-T (Europe)	1,800	200	Measured value at step (f) minus 1.6 (0.10) ± 0.6 (0.04)
1HD-T (Others)	1,800	200	Measured value at step (f) minus 1.2 (0.07) ± 0.2 (0.01)

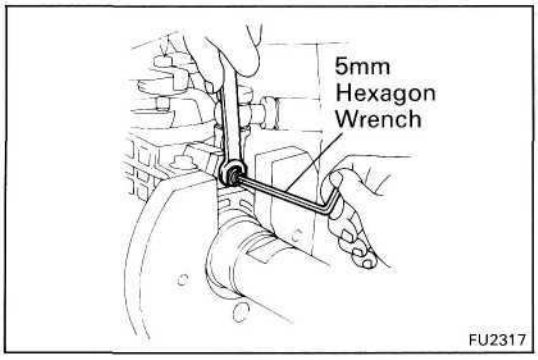

(i) Using a 5 mm hexagon wrench, adjust by turning the governor shaft, and perform the measurement again it is as specified.

HINT: The injection volume will increase approx. 3 cc (0.2 cu in.) with each 1 /2 turn of the governor shaft.

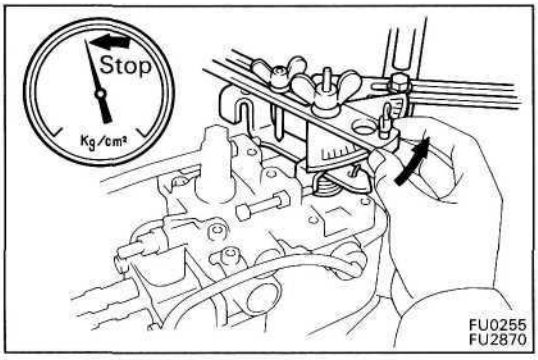

(j) (1PZand1HZ)
Check the end point injection volume by slowly moving the adjusting lever from the maximum speed side to the idle speed side, and secure it at the point where the pump inner pressure stops dropping.

Item	Pump rpm	No. of measuring strokes	Injection volume cc (cu in.)
1PZ	1,600	200	9.08 – 9.88 (0.55 – 0.60)
1HZ	1,600	200	8.2 (0.50) or more

(k) (1HD-T (Europe))
Check the timer piston stroke when the the pump rpm is 1,440 rpm and injection volume is 8.4-9.2 cc (0.51 -0.56 cu in.).

Timer piston stroke: 2.0 mm (0.079 in.) or less

(l) (1HD-T (Others))
Check the injection volume when the pump rpm is 1,440 rpm and timer piston stroke is 3.7-4.3 mm (0.146- 0.169 in.).

Injection volume: 6 cc (0.37 cu in.)

HINT: The end point for 1HD-T engine is hard to identify, so use the methods used in (k) or (l) above.

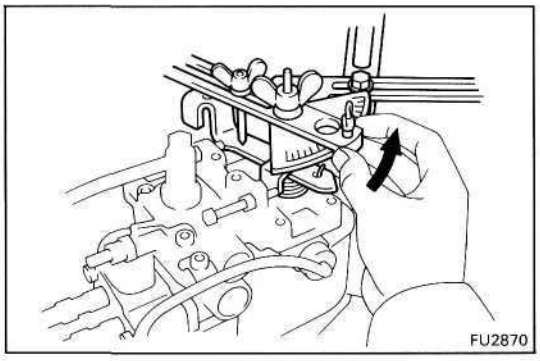

(m) Check the timer piston fluctuation when the adjusting lever is moved from the maximum speed side to the idle speed side.

Item	Pump rpm	Timer piston fluctuation mm (in.)
1PZ	1,600	2.19 – 3.19 (0.0862 – 0.1256)
1HZ	1,600	2.73 – 3.73 (0.1075 – 0.1469)
1HD-T (Europe)	1,440	0.70 – 1.70 (0.0276 – 0,0669)
1HD-T (Others)	1,440	1.96 – 2.96 (0.0772 – 0.1165)

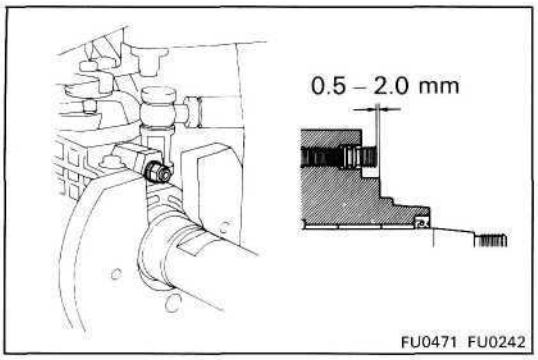

(n) Check the protrusion of the governor shaft.
Protrusion: 0.5-2.0 mm (0.020-0.079 in.)

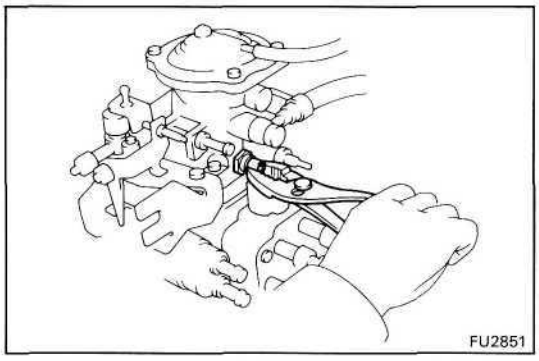

18. ADJUST IDLE SPEED

(a) (w/ Dash Pot)
Using pliers, remove the dash pot cover.

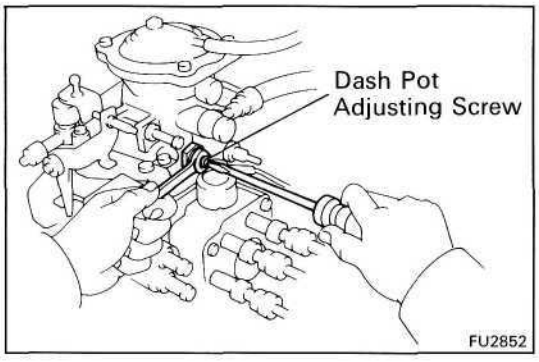

(b) (w/ Dash Pot)
Fully loosen the dash pot adjusting screw.

(c) Measure the injection volume for each pump rpm.

Item	Adjusting lever angle	Pump rpm	No. of measuring strokes	Injection volume cc (cu in.)	Variation limit cc (cu in.)	Remarks
1PZ	Minus 12 – 22°	325	200	q = 2.94 ~ 3.94 (0.18 ~ 0.24)	0.4 (0.02)	Adjust
		300		More than q Plus 0.5 (0.03)	–	–
		400		q Minus 1.2 ~ 2.2 (0.07 ~ 0.13)	–	
1HZ (M/T)	Minus 12 – 22°	375	200	q = 2.3 ~ 3.3 (0.14 ~ 0.20)	0.4 (0.02)	Pre-set
		350		More than q Plus 0.5 (0.03)	–	–
		450		q Minus 1.2 ~ 2.2 (0.07 ~ 0.13)	–	
		325		2.60 ~ 3.60 (0.16 ~ 0.22)	0.4 (0.02)	Adjust
1HZ (A/T)	Minus 12 – 22°	375	200	q = 2.3 ~ 3.3 (0.14 ~ 0.20)	0.4 (0.02)	Pre-set
		350		More than q Plus 0.5 (0.03)	–	–
		450		q Minus 1.2 ~ 2.2 (0.07 ~ 0.13)	–	
		375		1.64 ~ 2.64 (0.10 ~ 0.16)	0.4 (0.02)	Adjust

Cont'd

Item	Adjusting lever angle	Pump rpm	No. of measuring strokes	Injection volume cc (cu in.)	Variation limit cc (cu in.)	Remarks
1HD-T (Europe M/T)	Full position	400	200	9.32 ~ 11.72 (0.57 ~ 0.72)	–	–
	Minus 12 – 22°	325		q = 3.70 ~ 4.70 (0.23 ~ 0.29)	0.4 (0.02)	Adjust
		300		More than q Plus 0.5 (0.03)	–	–
1HD-T (Europe A/T)	Full position	400	200	10.30 ~ 12.70 (0.69 ~ 0.77)	–	–
	Minus 12 – 22°	325		q = 2.84 ~ 3.84 (0.17 ~ 0.23)	0.4 (0.02)	Adjust
		300		More than q Plus 0.5 (0.03)	–	–
1HD-T (Others M/T)	Full position	400	200	9.20 ~ 11.60 (0.56 ~ 0.71)	–	–
	Minus 12 – 22°	325		q = 3.70 ~ 4.70 (0.23 ~ 0.29)	0.4 (0.02)	Adjust
		300		More than q Plus 0.5 (0.03)	–	–
1HD-T (Others A/T)	Full position	400	200	10.18 ~ 12.58 (0.62 ~ 0.77)	–	–
	Minus 12 – 22°	325		q = 2.84 ~ 3.84 (0.17 ~ 0.23)	0.4 (0.02)	Adjust
		300		More than q Plus 0.5 (0.03)	–	–

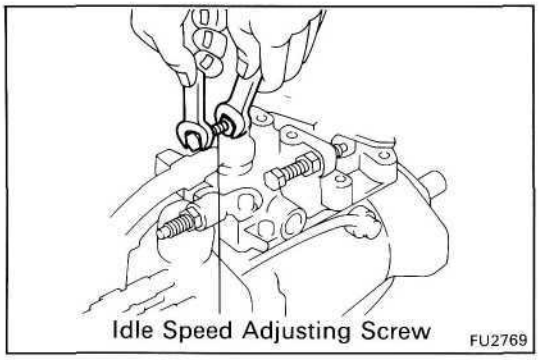

(d) Adjust by turning the idle speed adjusting screw.

(e) (w/ Dash Pot)
Set the adjusting lever to the angle for the injection volume shown below.

Item	Pump rpm	No. of measuring strokes	Injection volume cc (cu in.)
1HZ	700	200	q = 0.5 ~ 0.9 (0.03 ~ 0.05)
1HD-T	400	200	q = 0.1 ~ 0.3 (0.01 ~ 0.02)

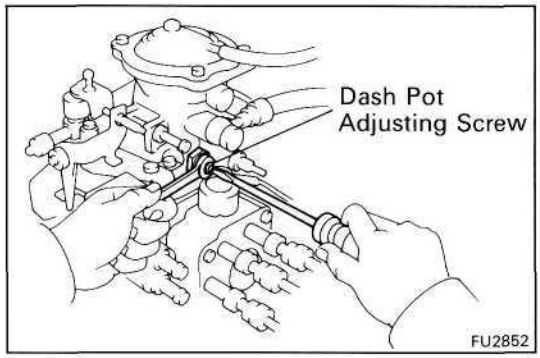

(f) (w/ Dash Pot)
Adjust the injection volume with the dash pot adjusting screw.

HINT: The stroke will decrease with turn to clockwise and increase with turn to counterclockwise.

Item	Pump rpm	No. of measuring strokes	Injection volume cc (cu in.)
1HZ	700	200	q Plus 0.2 ~ 0.3 (0.01 ~ 0.02)
1HD-T	400	200	q Plus 0.1 ~ 0.3 (0.01 ~ 0.02)

(g) (w/ Dash Pot)
Install the dash pot cover.

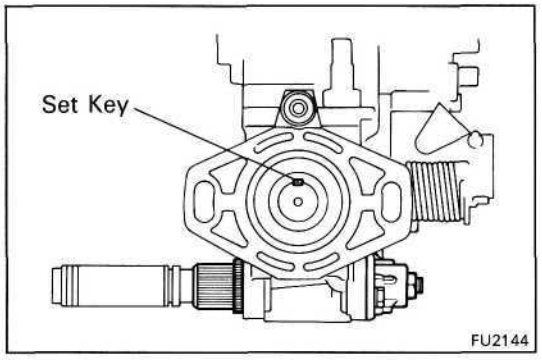

19. (w/ACSD)
ADJUST COLD STARTING SYSTEM

(a) Remove the overflow screw and check the fuel temperature in the fuel pump.

Fuel temperature: 15 - 35°C (59 - 95 °F)

(b) Set the set key of the pump drive shaft in a vertical or horizontal position.

(c) Set the scale of the timer measuring device to zero.

(d) Check the adjusting lever opening angle and consider this angle as zero.

(e) Remove the metal plate between the cold starting lever and thermo wax plunger.

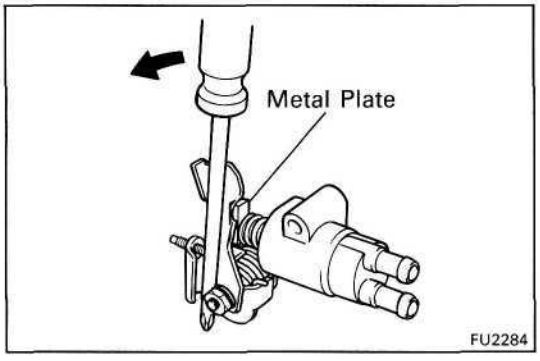

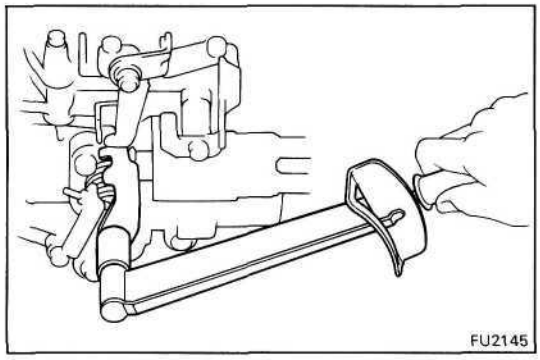

(f) Torque the cold starting lever clockwise to approx. 50 kg-cm (43 in.-lb, 4.9 N-m) and keep the lever tightened for about 10 seconds. Then release the torque.

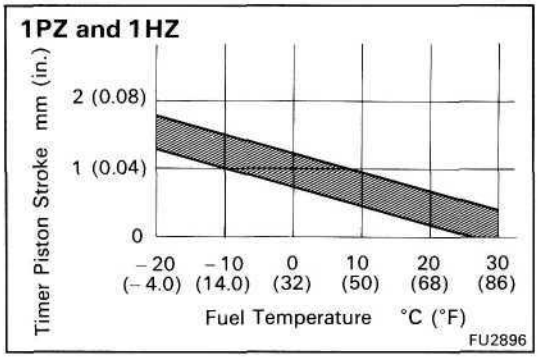

(g) Measure the timer piston stroke.

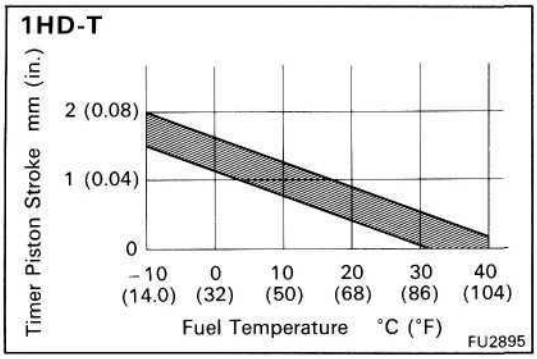

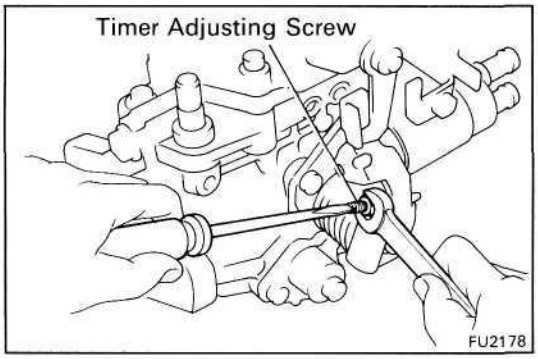

(h) Adjust by turning the timer adjusting screw.

HINT: Screw in for stroke decrease.

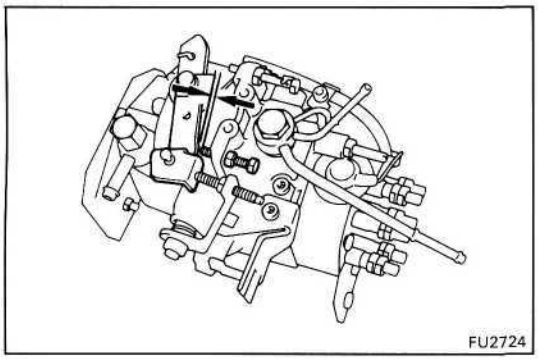

20. (w/ ACSD)
ADJUST FAST IDLE

(a) Measure the clearance between the adjusting lever and idle speed adjusting screw.

Item	Fuel temperature	Clearance
1PZ and 1HZ	15°C (59°F)	1.3 mm (0.051 in.)
	30°C (86°F)	0 mm (0 in.)
1HD-T	15°C (59°F)	1.6 mm (0.063 in.)
	40°C (104°F)	0 mm (0 in.)

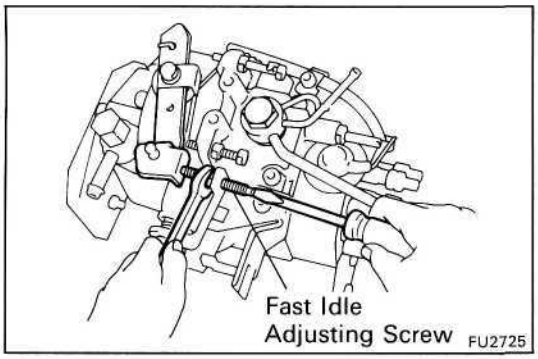

(b) Adjust by turning the fast idle adjusting screw.

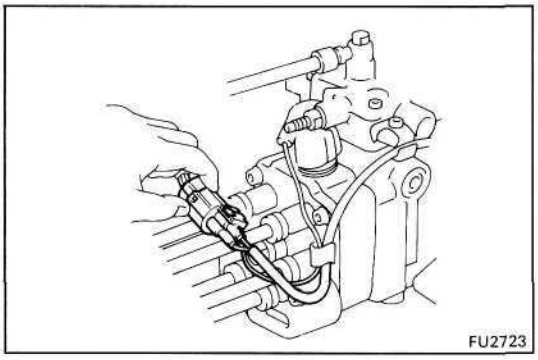

21. POST ADJUSTMENT CHECK

(a) Check that injection stops when the fuel cut solenoid harness is removed.

Pump revolution: 100 rpm

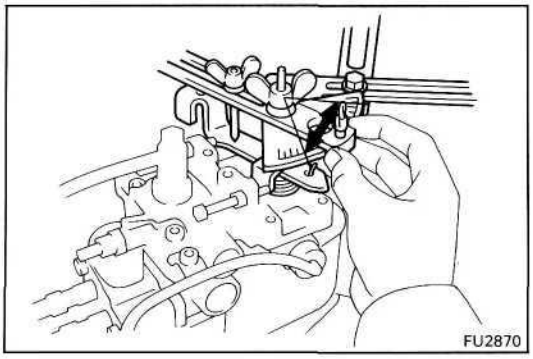

(b) Check the adjusting lever movement.

Adjusting lever angle: 38-48°

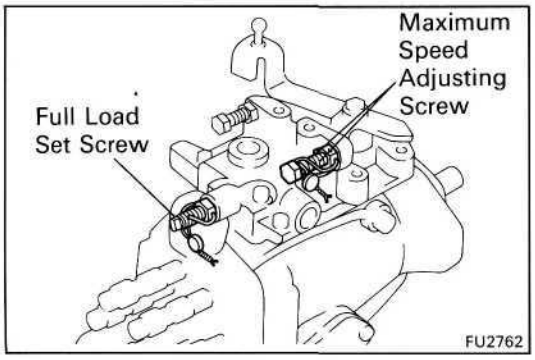

22. SEAL PARTS

Seal the maximum speed adjusting screw and full load set screws with new lead seals.

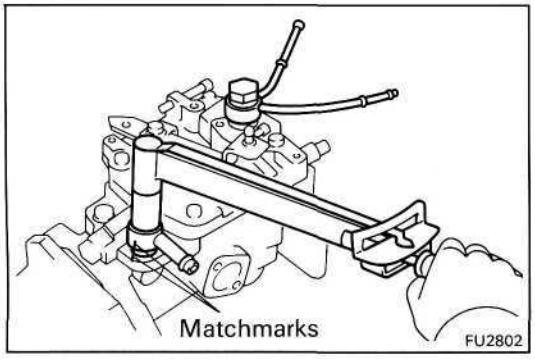

23. INSTALL TWO FUEL PIPES

Torque:

Inlet	**250 kg-cm (18 ft-lb, 25 N·m)**
Outlet	**225 kg-cm (16 ft-lb, 22 N·m)**

24. INSTALL INJECTION PUMP STAY

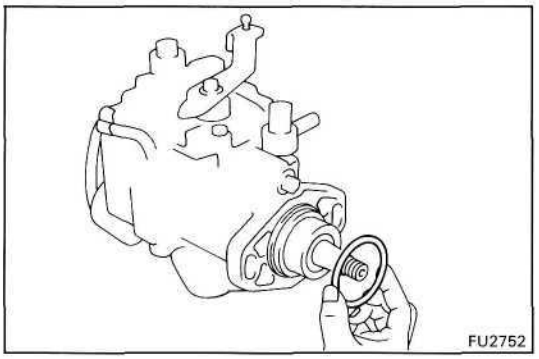

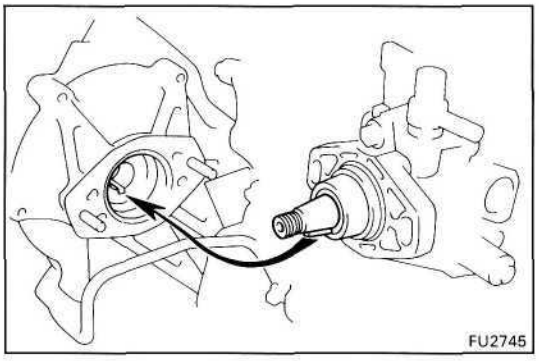

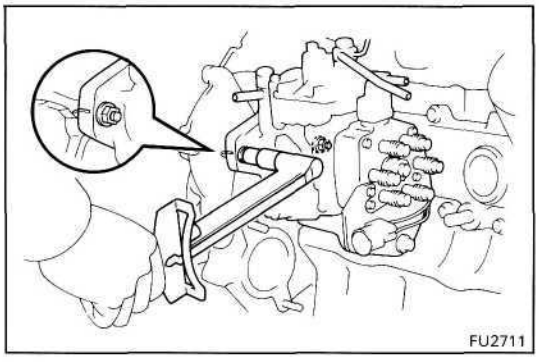

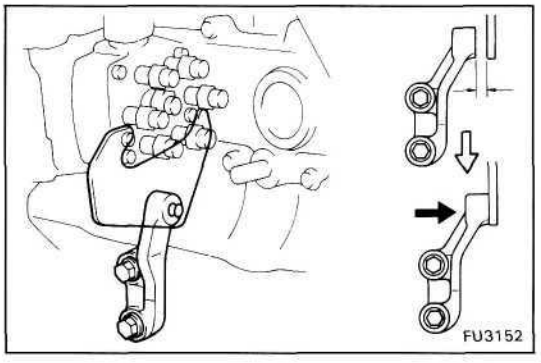

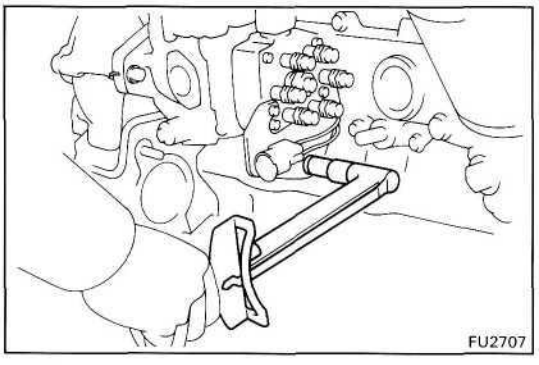

INSTALLATION OF INJECTION PUMP

(See page FU-27)

1. INSTALL INJECTION PUMP

NOTICE: Do not put the injection pump (with HAC, or for the 1 HD-T) at an angle more than 45° from the horizontal.

(a) (1PZ and 1 HZ (M/T for Europe))

Place the cylinder block insulator in position.

(b) Install a new O-ring to the pump.

(c) Apply a light coat of engine oil on the O-ring.

(d) Align the set key on the drive shaft and groove of the injection pump drive gear.

(e) Align the period lines (or matchmarks) of the injection pump and timing belt case.

(f) Install the two nuts holding the injection pump to the timing gear case.

Torque: 185 kg-cm (13 ft-lb, 18 N-m)

(g) Install the pump stay mount bolt.

Torque: 700 kg-cm (51 ft-lb, 69 N·m)

NOTICE: Before tightening to the standard torque, check whether the pumpstay is up against the pump braket.

If there is a gap, loosen the bolts joining the pump stay to the cylinder block and set the pump stay against the pump bracket.

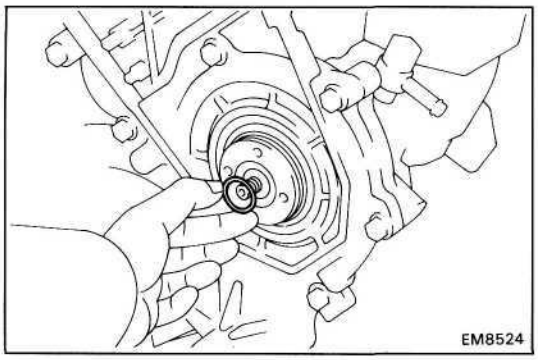

(h) Install a new O-ring to the injection pump drive gear.

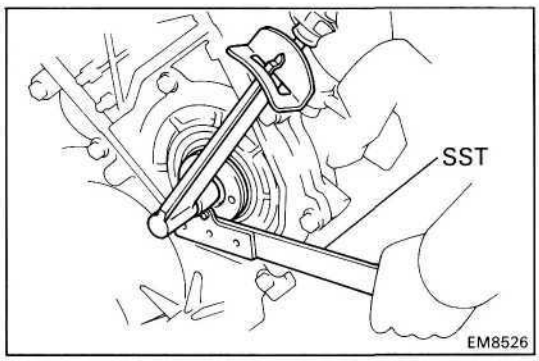

(i) Install the injection pump drive gear set nut.

(j) Using SST, torque the nut.

SST 09330-00021

Torque: 1,000 kg-cm (72 ft-lb, 98 N·m)

2. CHECK INJECTION TIMING (See page EM-24)

3. INSTALL INJECTION PIPES
(See step 3 on page FU-15)

Torque:
"IPZand 1HZ 150 kg-cm (11 ft-lb, 15 N·m)
1HD-T 250 kg-cm (18 ft-lb, 25 N·m)

4. (w/ BACS)
CONNECT BACS VACUUM HOSE

5. (w/ PCS)
CONNECT PCS VACUUM HOSE

6. (1HD-T)

CONNECT BOOST COMPENSATOR HOSE

7. CONNECT FUEL HOSES TO INJECTION PUMP

8. CONNECT INJECTION PUMP CONNECTOR

9. (w/ ACSD)
CONNECT WATER BY-PASS HOSES TO THERMO WAX

10. (w/A/C)
CONNECT A/C IDLE-UP VACUUM HOSE

11. (A/T)
CONNECT THROTTLE CABLE

12. CONNECT ACCELERATOR CONNECTING ROD

13. INSTALL NO.2 CAMSHAFT TIMING PULLEY
(See step 4 on page EM-39)

14. INSTALL TIMING BELT
(See steps 6 to 9 on pages EM-39 to 41)

15. **FILL WITH ENGINE COOLANT (See page CO-5)**
16. **START ENGINE AND CHECK FOR FUEL LEAKS**
17. **CHECK IDLE SPEED AND MAXIMUM SPEED (See page EM-27)**

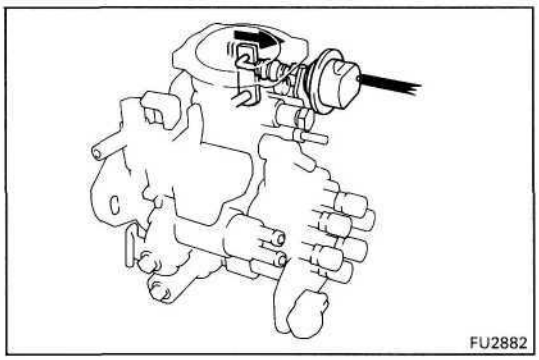

POWER CONTROL SYSTEM (PCS) (HDB30(w/ M/T) only)

ON-VEHICLE INSPECTION

INSPECT POWER CONTROL SYSTEM (PCS)

(a) Start the engine.

(b) Depress the clutch pedal and check the operation of the actuator at each shift position.

Standard:

Shifting to 1st or Reverse..... Actuator not operating

Sifting to other positions..... Actuator operates

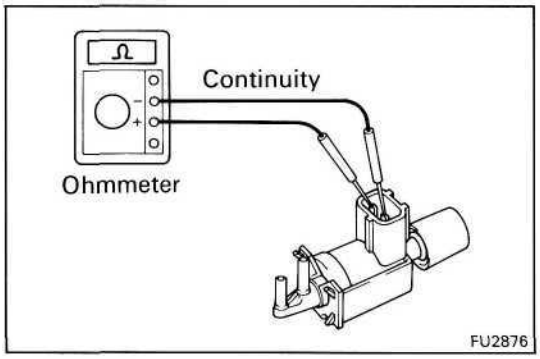

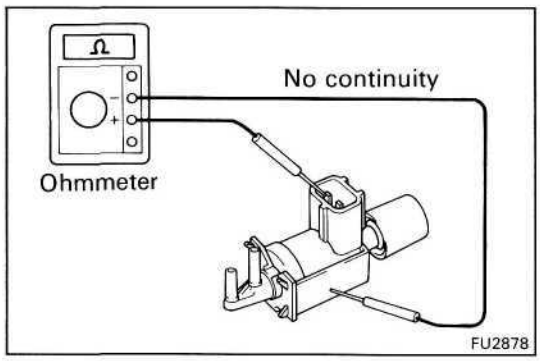

INSPECTION OF POWER CONTROL SYSTEM (PCS) COMPONENTS

1. INSPECT PCS VSV

A. Inspect VSV for open circuit

Using an ohmmeter, check that there is continuity between the terminals.

Resistance (Cold): 33-39 Q

If there is no continuity, replace the VSV.

B. Inspect VSV for ground

Using an ohmmeter, check that there is no continuity between each terminal and the body.

If there is continuity, replace the VSV.

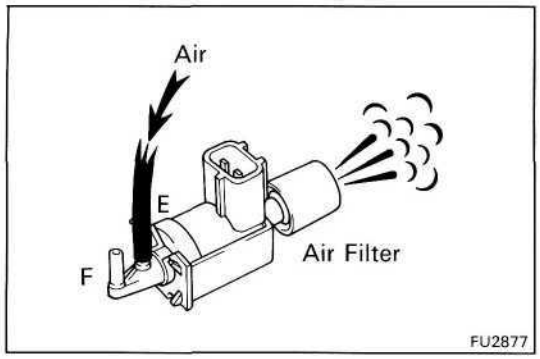

C. Inspect VSV operation

(a) Check that air flows from pipes E to the filter.

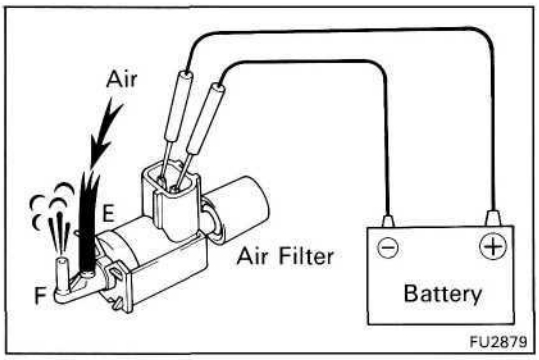

(b) Apply battery voltage across the terminals.

(c) Check that air flows from pipe E to F.

If operation is not as specified, replace the VSV.

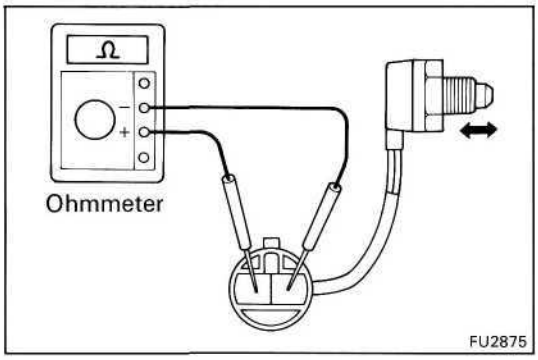

2. INSPECT SHIFT POSITION SWITCH

(a) Check that there is no continuity between terminals when the switch is pushed (shift position 1st or reverse).

(b) Check that there is continuity between terminals when switch is free (shift position others).

If continuity is not as specified, replace the switch.

COOLING SYSTEM

Page
DESCRIPTION.....CO-2
TROUBLESHOOTING.....CO-4
CHECK AND REPLACEMENT OF ENGINE COOLANT.....CO-4
WATER PUMP.....CO-6
THERMOSTAT.....CO-10
RADIATOR.....CO-12

DESCRIPTION

This engine utilizes a pressurized water forced circulation cooling system which includes a thermostat equipped with a by-pass valve mounted on the inlet side.

1PZ and 1HZ

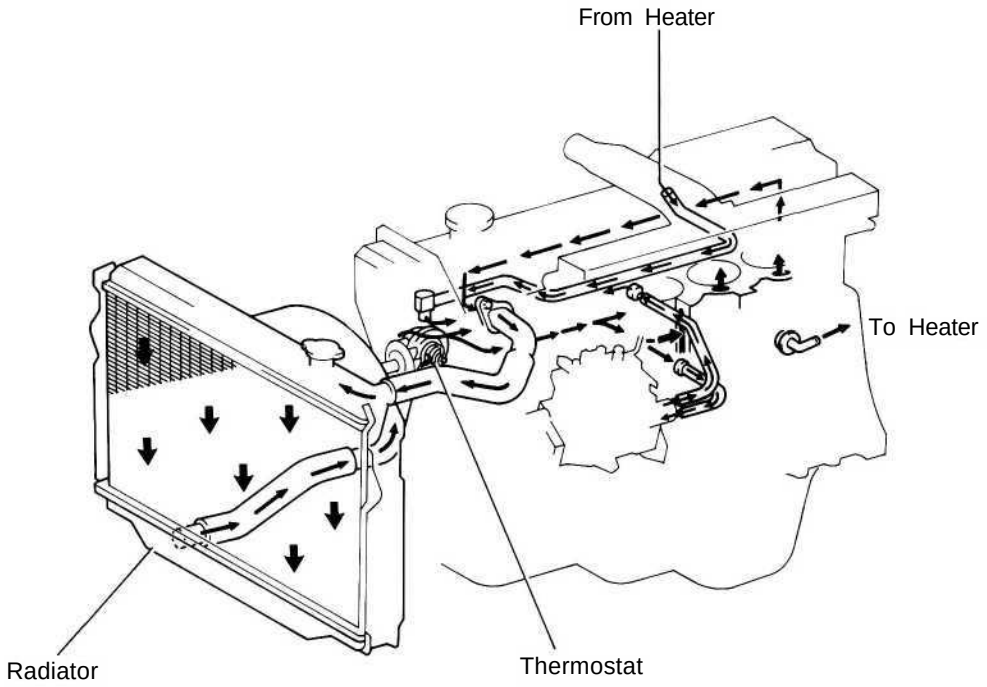

1HD-T

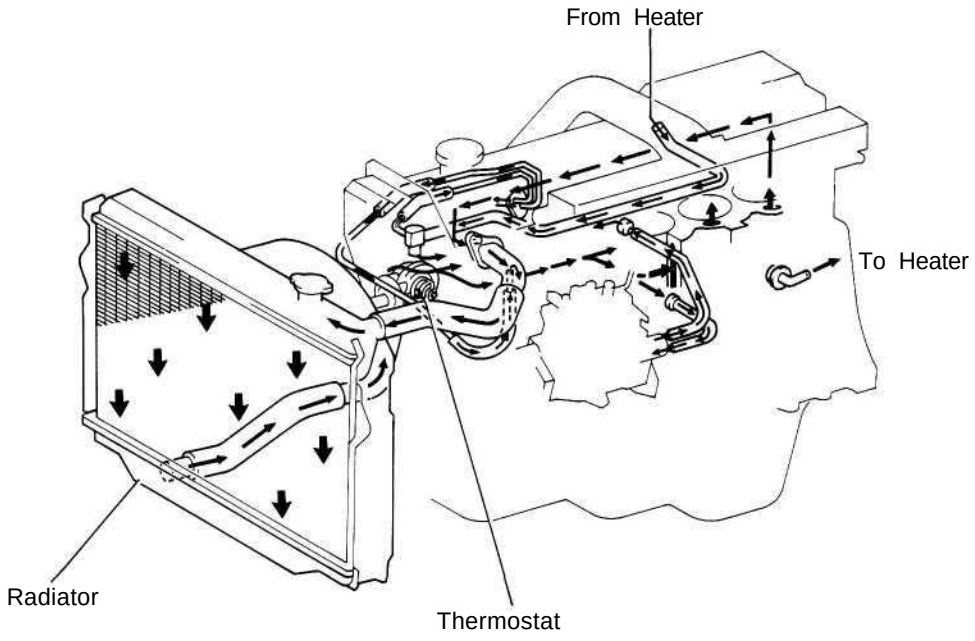

C01049
C01050

The cooling system is composed of the water jacket (inside the cylinder block and cylinder head), radiator, water pump, thermostat, cooling fan, hoses and other components. Coolant which is heated in the water jacket is pumped to the radiator, where it is cooled by the cooling fan and the vehicle windstream. Coolant which has been cooled is then sent back to the engine by the water pump, where it cools the engine. The water jacket is a network of channels in the shell of the cylinder block and cylinder head through which coolant passes. It is designed to provide adequate cooling of the cylinders and combustion chambers which become the hottest during engine operation.

RADIATOR

The radiator performs the function of cooling the coolant which has passed through the water jacket and become hot, and it is mounted in the front of the vehicle. The radiator consists of an upper tank and lower tank, and a core which connects the two tanks. The upper tank contains an inlet for coolant from the water jacket and a filler inlet. It also has a hose through which excess coolant or steam can flow. The lower tank has an outlet and drain cock for the coolant. The core contains many tubes and cooling fins through which coolant flows from the upper tank to the lower tank so that coolant has been heated up as it passes through the water jacket is cooled heae by the air sucked through the radiator by the cooling fan, as well as by the wind generated by the vehicle's travel. Models with an automatic transmission include an automatic transmissions fluid cooler built into the lower tank of the radiator.

RADIATOR CAP

The radiator cap is a pressure type cap which seals the radiator, resulting in pressurization of the radiator as the coolant expands. The pressurization prevents the coolant from boiling even when the coolant temperature exceeds 100°C (212°F). A relief valve (pressurization valve) and a vacuum valve (negative pressure valve) are built into the radiator cap. When the pressure generated inside the cooling system exceeds the limit (coolant temperature: 110-120°C, 230 - 248°F, pressure; 0.3-1.0 kg/cm^2, 4.3-14.2 psi, 29.4-98.1 kPa) the relief valve is opened by the pressure and lets steam escape through the overflow pipe. The vacuum valve opens to allow atmospheric air to enter to alleviated the vacumm which develops in the cooling system after the engine is stopped and the coolant temperature drops. The valve's opening allows the pressure in the cooling system to return to the reservoir tank.

RESERVOIR TANK

The reservoir tank is used to catch coolant which overflows the cooling system as a result of volumetric expansion when the coolant is heated. When the coolant temperature drops the coolant in the reservoir tank returns to the radiator, thus keeping the radiator full at all times and avoiding needless coolant loss. To find out if the coolant needs to be replenished, check the reservoir tank level.

WATER PUMP

The water pump is used for forced circulation of coolant through the cooling system. It is mounted on the front of the cylinder block and driven by a drive belt.

THERMOSTAT

The thermostat has a wax type by-pass valve and is mounted in the cylinder block. The thermostat includes a type of automatic valve operated by fluctuations in the coolant temperature. This valve closes when the coolant temperature drops, preventing the circulation of coolant through the radiator and thus permitting the engine to warm up rapidly. The valve opens when the coolant temperature has risen, allowing the circulation of coolant. Wax inside the thermostat expands when heated and contracts when cooled. Heating the wax thus generates pressure which overpowers the force of the spring which keeps the valve closed, thus opening the valve. When the wax cools, its contraction causes the force of the spring to take effect once more, closing the valve. The thermostat in this engine operates at a temperature of 76°C (169°F).

TROUBLESHOOTING

Problem	Possible cause	Remedy	Page
Engine overheats	Fan belt loose or missing	Adjust or replace belts	CH-5
	Dirt, leaves or insects on radiator or condenser	Clean radiator or condenser	CO-12
	Hoses, water pump, thermostat housing, radiator, heater, core plugs or head gasket leakage	Repair as necessary	
	Thermostat faulty	Check thermostat	CO-10
	Injection timing retarded	Adjust timing	EM-24
	Fluid coupling faulty	Replace fluid coupling	CO-7
	Radiator hose plugged or rotted	Replace hose	
	Water pump faulty	Replace water pump	CO-7
	Radiator plugged or cap faulty	Check radiator	CO-12
	Cylinder head or block cracked or plugged	Repair as necessary	

HINT: Removal of the thermostat would have an adverse effect, causing a lowering of cooling efficiency. Do not remove the thermostat, even if the engine tends to overheat.

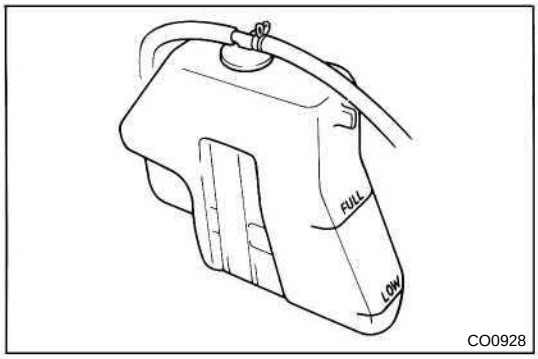

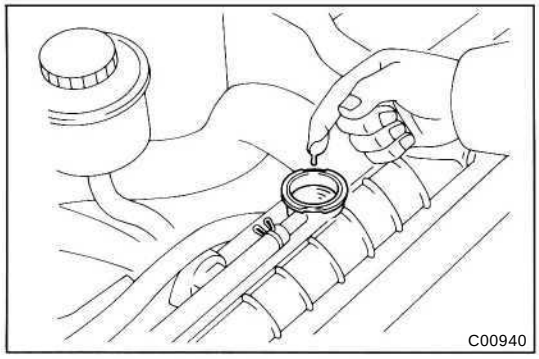

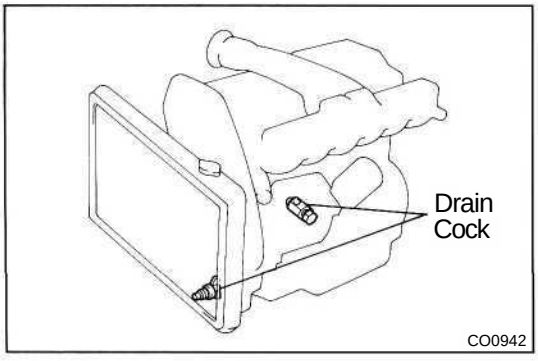

CHECK AND REPLACEMENT OF ENGINE COOLANT

1. CHECK ENGINE COOLANT LEVEL AT RESERVOIR TANK

The coolant level should be between the "LOW" and "FULL" lines.

If low, check for leaks and add coolant up to the "FULL" line.

2. CHECK ENGINE COOLANT QUALITY

There should not be any excessive deposits of rust or scales around the radiator cap or radiator filler hole, and the coolant should be free from oil.

If excessively dirty, replace the coolant.

3. REPLACE ENGINE COOLANT

(a) Remove the radiator cap.

CAUTION: To avoid the danger of being burned, do not remove it while the engine and radiator are still hot, as fluid and steam can be blown out under pressure.

(b) Drain the coolant from the radiator and engine drain cocks.

(c) Close the drain cocks.

Torque (Engine drain cock):
250 kg-cm (18 ft-lb, 25 N-m)

(d) Fill the system with coolant.
Use a good brand of ethylene-glycol or TOYOTA radiator conditioner or equivalent anticorrosive, mixed according to the manufacturer's directions.

Ethylene-glycol type: This type has an antifreeze and anticorrosive effect.
TOYOTA radiator conditioner: This has only an anticorrosive effect.

NOTICE:
- **Do not use alcohol type coolant.**
- **The coolant should be mixed with demineralized water or distilled water.**

Capacity (w/o Heater):
PZJ70, 73, 75
9.6 liters (10.1 US qts, 8.4 Imp. qts)
HZJ70, 73, 75
M/T 9.9 liters (10.5 US qts, 8.7 Imp. qts)
A/T 9.7 liters (10.3 US qts, 8.5 Imp. qts)
HZJ80 and HDJ80
M/T 10.4 liters (11.0 US qts, 9.2 Imp. qts)
A/T 10.2 liters (10.8 US qts, 9.0 Imp. qts)
HZB30 and HDB30
10.2 liters (10.8 US qts, 9.0 Imp. qts)
Capacity (w/ Heater):
PZJ70, 73, 75
10.3 liters (10.9 US qts, 9.1 Imp. qts)
HZJ70, 73, 75
M/T 10.6 liters (11.2 US qts, 9.3 Imp. qts)
A/T 10.4 liters (11.0 US qts, 9.2 Imp. qts)
HZJ80and HDJ80
M/T 11.1 liters (11.6 US qts, 9.8 Imp. qts)
A/T 10.9 liters (11.5 US qts, 9.6 Imp. qts)
HZB30 and HDB30
14.6 liters (15.4 US qts, 12.8 Imp. qts)
Capacity (w/ Front and rear heaters):
PZJ70, 73 75
11.3 liters (11.9 US qts, 9.9 Imp. qts)
HZJ70, 73, 75
11.6 liters (12.2 US qts, 10.2 Imp. qts)
HZJ80 and HDJ80
M/T (Europe)
12.0 liters (12.7 US qts, 10.6 Imp. qts)
A/T (Europe)
11.8 liters (12.5 US qts, 10.4 Imp. qts)
M/T (Others)
11.9 liters (12.6 US qts, 10.5 Imp. qts)
A/T (Others)
11.7 liters (12.4 US qts, 10.3 Imp. qts)

(e) Reinstall the radiator cap.

(f) Warm up the engine and check for leaks.

(g) Recheck the coolant level and refill as necessary.

WATER PUMP

COMPONENTS

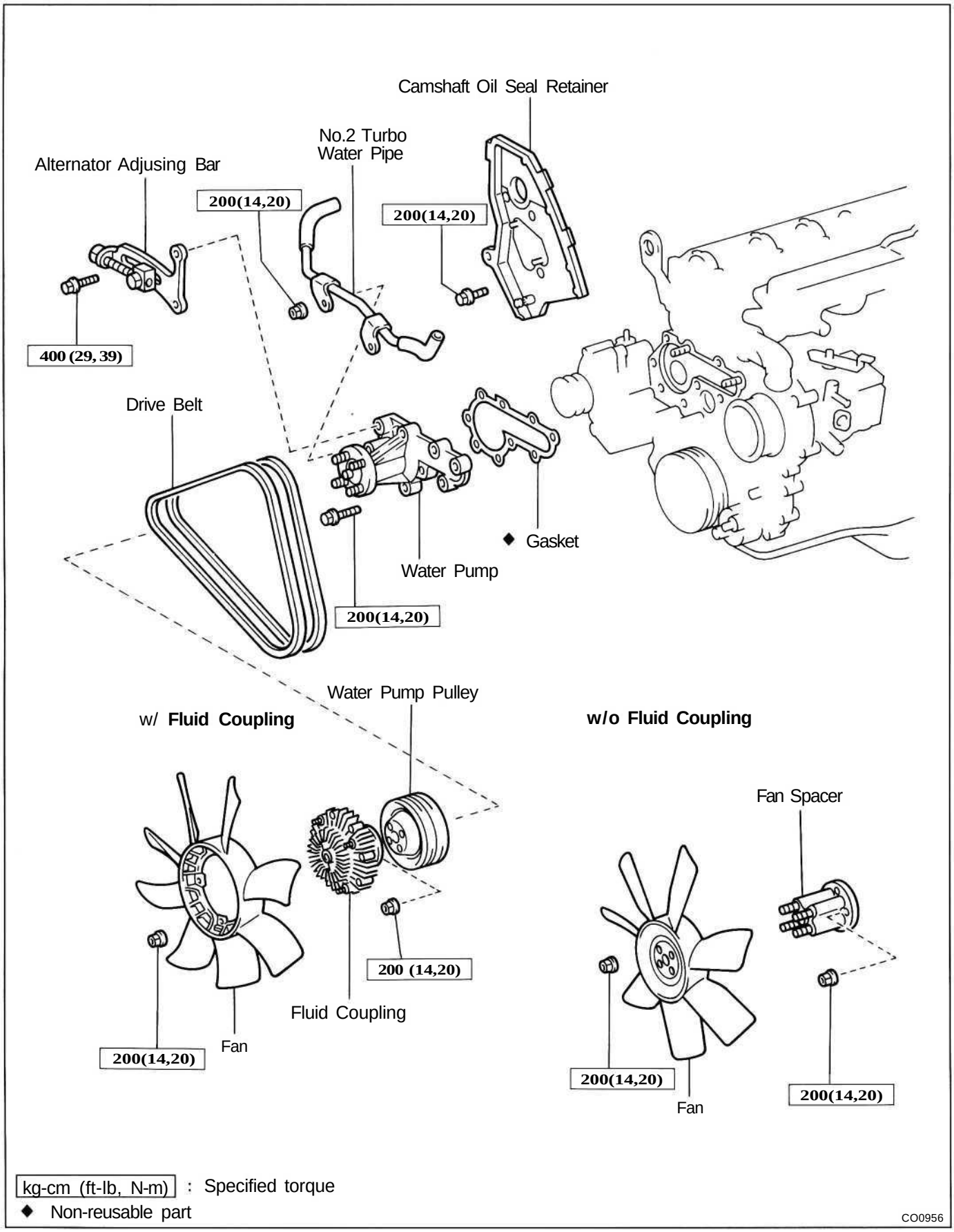

kg-cm (ft-lb, N-m) : Specified torque

◆ Non-reusable part

CO0956

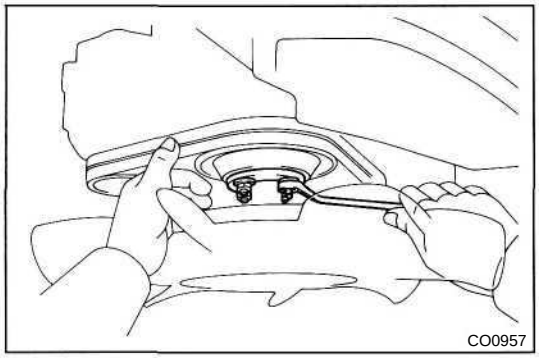

REMOVAL OF WATER PUMP

(See page CO-6)

1. **DRAIN ENGINE COOLANT (See page CO-5)**

2. **REMOVE DRIVE BELT, FAN AND WATER PUMP PULLEY**
   (a) Stretch the belt tight and loosen the four pump pulley set nuts.
   (b) Loosen the pivot bolt, lock bolt and adjusting bolt, and remove the drive belt.
   (c) Remove the four nuts, fan and fluid coupling (fan spacer) assembly and pulley.

3. **REMOVE TIMING BELT AND IDLER PULLEY (See steps 1 to 4 on pages EM-33 to 34)**

4. **REMOVE NO.1 CAMSHAFT TIMING PULLEY (See steps 6 to 8 on pages EM-34 to 35)**

5. **REMOVE CAMSHAFT OIL SEAL RETAINER (See step 14 on page EM-55)**

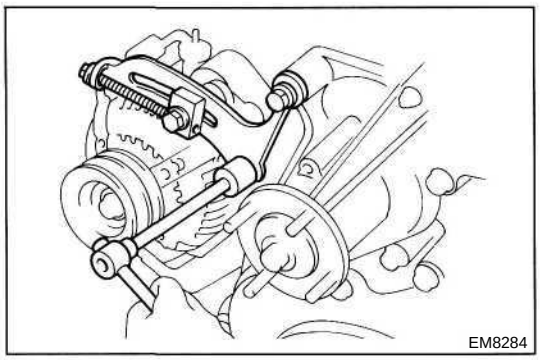

6. **REMOVE WATER PUMP**
   (a) (1HD-T)
   Disconnect the turbo water by-pass hoses.
   (b) Remove the three bolts and alternator adjusting bar.

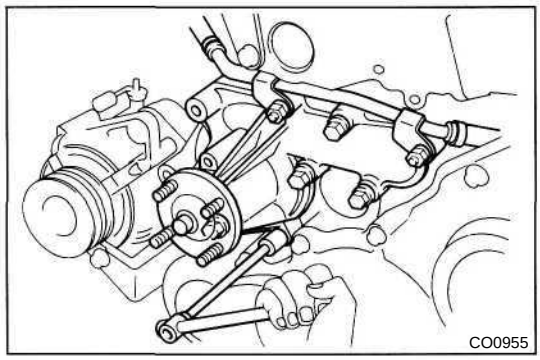

   (c) Remove the five bolts, two nuts, No.2 turbo water pipe (1 HD-T), water pump and gasket.

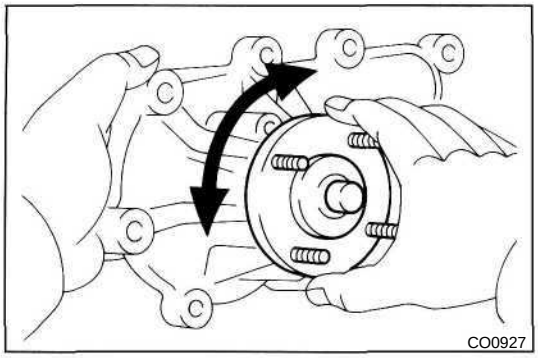

INSPECTION OF WATER PUMP

1. INSPECT WATER PUMP

Turn the pulley and check that the water pump bearing moves smoothly and quietly.

If necessary, replace the water pump.

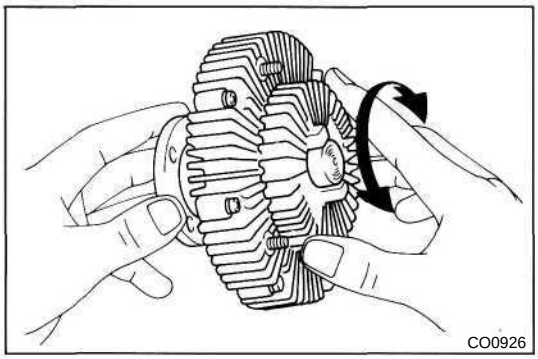

2. INSPECT FLUID COUPLING

Check the fluid coupling for damage and silicon oil leakage.

If necessary, replace the fluid coupling.

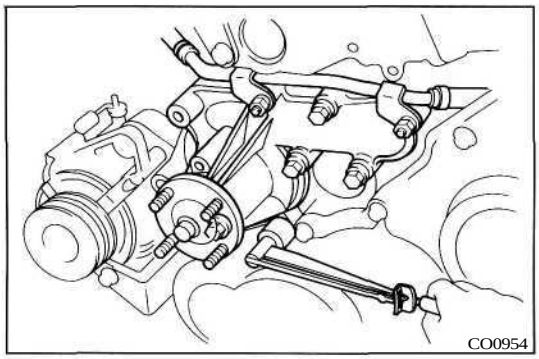

INSTALLATION OF WATER PUMP

(See page CO-6)

1. INSTALL WATER PUMP

(a) Install a new gasket, the water pump and No.2 turbo water pipe (1 HD-T) with the five bolts and two nuts.

Torque: 200 kg-cm (14 ft-lb, 20 N-m)

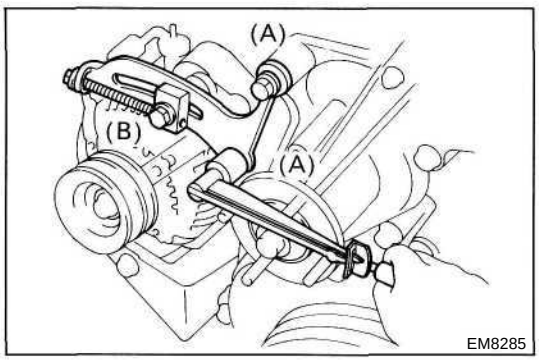

(b) Install the alternator adjusting bar with the two bolts (A).

Torque: 400 kg-cm (29 ft-lb, 39 N-m)

(c) Temporarily install the lock bolt (B).

(d) (1HD-T)
Connect the water by-pass hoses.

2. INSTALL CAMSHAFT OIL SEAL RETAINER
(See step 6 on page EM-79)

3. INSTALL NO.1 CAMSHAFT TIMING PULLEY
(See steps 1 to 3 on page EM-38)

4. INSTALL IDLER PULLEY TIMING BELT
(See steps 5 to 11 on pages EM-39 to 41)

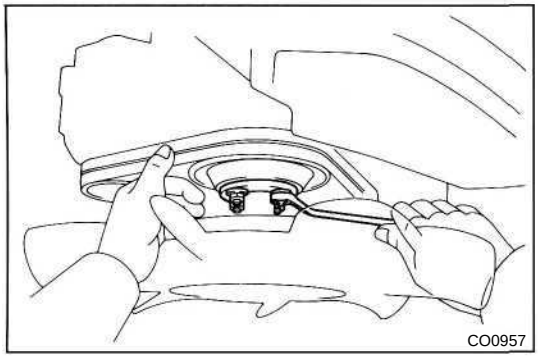

5. INSTALL WATER PUMP PULLEY, FAN AND DRIVE BELT

(a) Install the pump pulley, the fluid fan and coupling (fan spacer) assembly with the four nuts.

(b) Place the drive belt on each pulley.

(c) Stretch the belt tight and torque the four nuts.

Torque: 200 kg-cm (14 ft-lb, 20 N-m)

(d) Adjust the drive belt deflection.
(See step 3 on page CH-5)

6. FILL WITH ENGINE COOLANT (See page CO-5)

7. START ENGINE AND CHECK FOR LEAKS

THERMOSTAT

REMOVAL OF THERMOSTAT

1. DRAIN ENGINE COOLANT (See page CO-5)

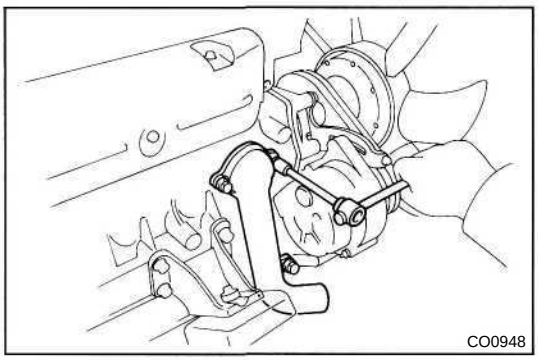
CO0948

2. REMOVE WATER INLET

Remove the three bolts and water inlet from the water inlet housing.

3. REMOVE THERMOSTAT

INSPECTION OF THERMOSTAT

INSPECT THERMOSTAT

HINT: The thermostat is numbered with the valve opening temperature.

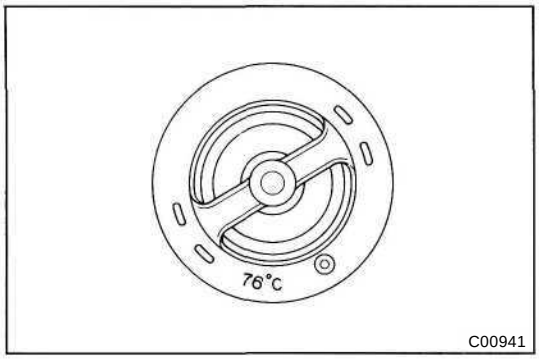

C00941

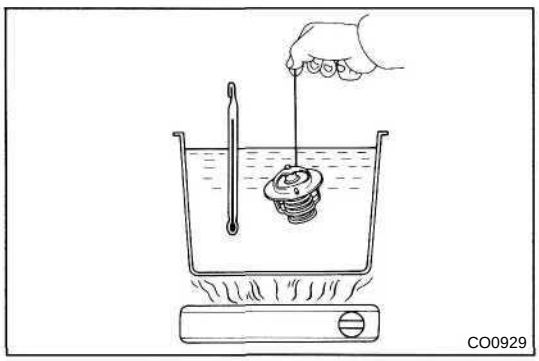
CO0929

(a) Immerse the thermostat in water and gradually heat the water.

(b) Check the valve opening temperature.

Valve opening temperature: 74-78X (165-172°F)

If the valve opening temperature is not as specified, replace the thermostat.

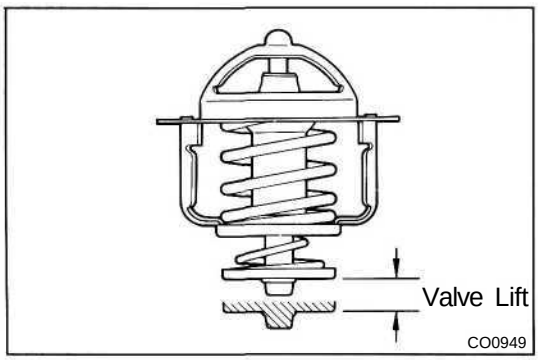

CO0949

(c) Check the valve lift.

Valve lift: 10 mm (0.39 in.) or more at 90°C (194°F)

If the valve lift is not as specified, replace the thermostat.

(d) Check that the valve spring is tight when the thermostat is fully closed.

If necessary, replace the thermostat.

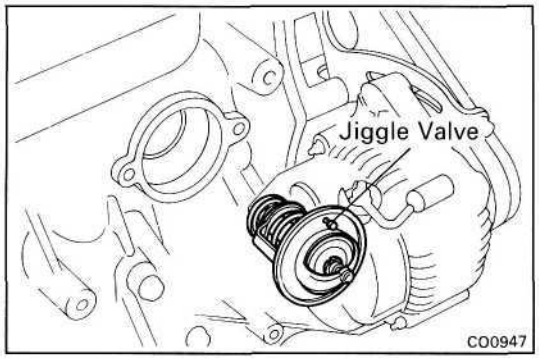

INSTALLATION OF THERMOSTAT

1. **PLACE THERMOSTAT IN CYLINDER BLOCK**
   (a) Install a new gasket to the thermostat.
   (b) Install the thermostat with the jiggle valve upward.

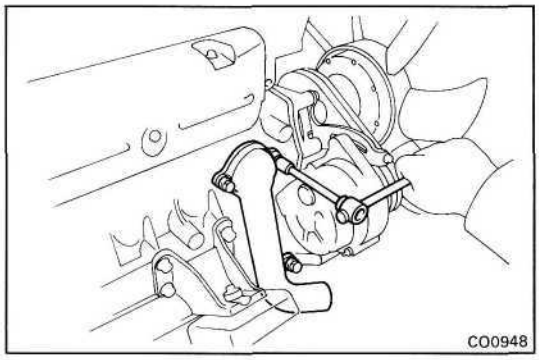

2. **INSTALL WATER INLET TO CYLINDER BLOCK**
   Install the water inlet with the three bolts.
   Torque: 200 kg-cm (14 ft-lb, 20 N-m)
   NOTICE: Torque the two upper bolts first.

3. **FILL WITH ENGINE COOLANT (See page CO-5)**

4. **START ENGINE AND CHECK FOR LEAKS**

RADIATOR

CLEANING OF RADIATOR

Using water or a steam cleaner, remove any mud and dirt from the radiator core.

NOTICE: If using a high pressure type cleaner, be careful not to deform the fins of the radiator core. If the cleaner nozzle pressure is 30-35 kg/cm^2(427-498 psi, 2,942-3,432 kPa), keep a distance of at least 40-50 cm (15.75-19.69 in.) between the radiator core and cleaner nozzle.

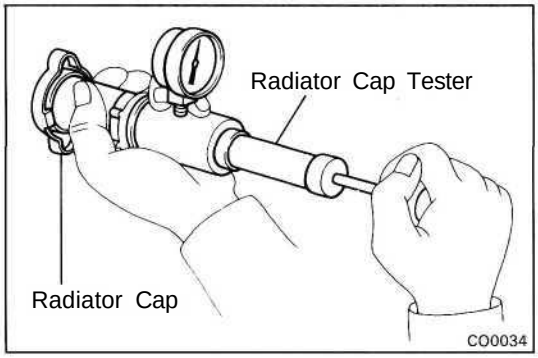

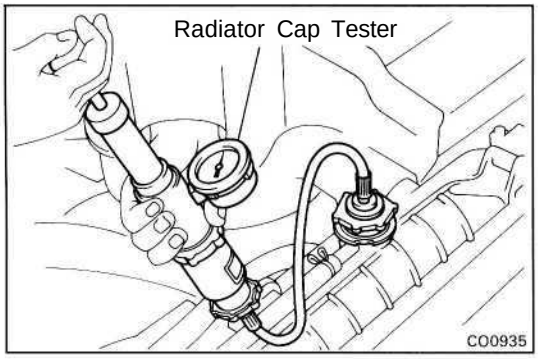

INSPECTION OF RADIATOR

1. INSPECT RADIATOR CAP

Using a radiator cap tester, pump the tester and measure the relief valve opening pressure.

Standard opening pressure:
0.75-1.05 kg/cm^2 (10.7-14.9 psi, 74-103 kPa)
Minimum opening pressure:
0.6 kg/cm^2 (8.5 psi, 59 kPa)

If the opening pressure is less than minimum, replace the radiator cap.

2. INSPECT COOLING SYSTEM FOR LEAKS

(a) Fill the radiator with coolant and attach a radiator cap tester.

(b) Warm up the engine.

(c) Pump it to 1.2 kg/cm^2 (17.1 psi, 118 kPa), check that pressure does not drop.

If the pressure drops, check for leaks the hoses, radiator or water pump. If no external leaks are found, check the heater core, cylinder block and head.

LUBRICATION SYSTEM

	Page
DESCRIPTION	LU-2
TROUBLESHOOTING	LU-4
OIL PRESSURE CHECK	LU-5
REPLACEMENT OF ENGINE OIL AND OIL FILTER	LU-6
OILPUMP	LU-8
OIL COOLER, RELIEF VALVE AND CHECK VALVE	LU-15
OIL NOZZLES AND CHECK VALVES	LU-20

DESCRIPTION

A fully pressurized, fully filtered lubrication system has been adopted for this engine.

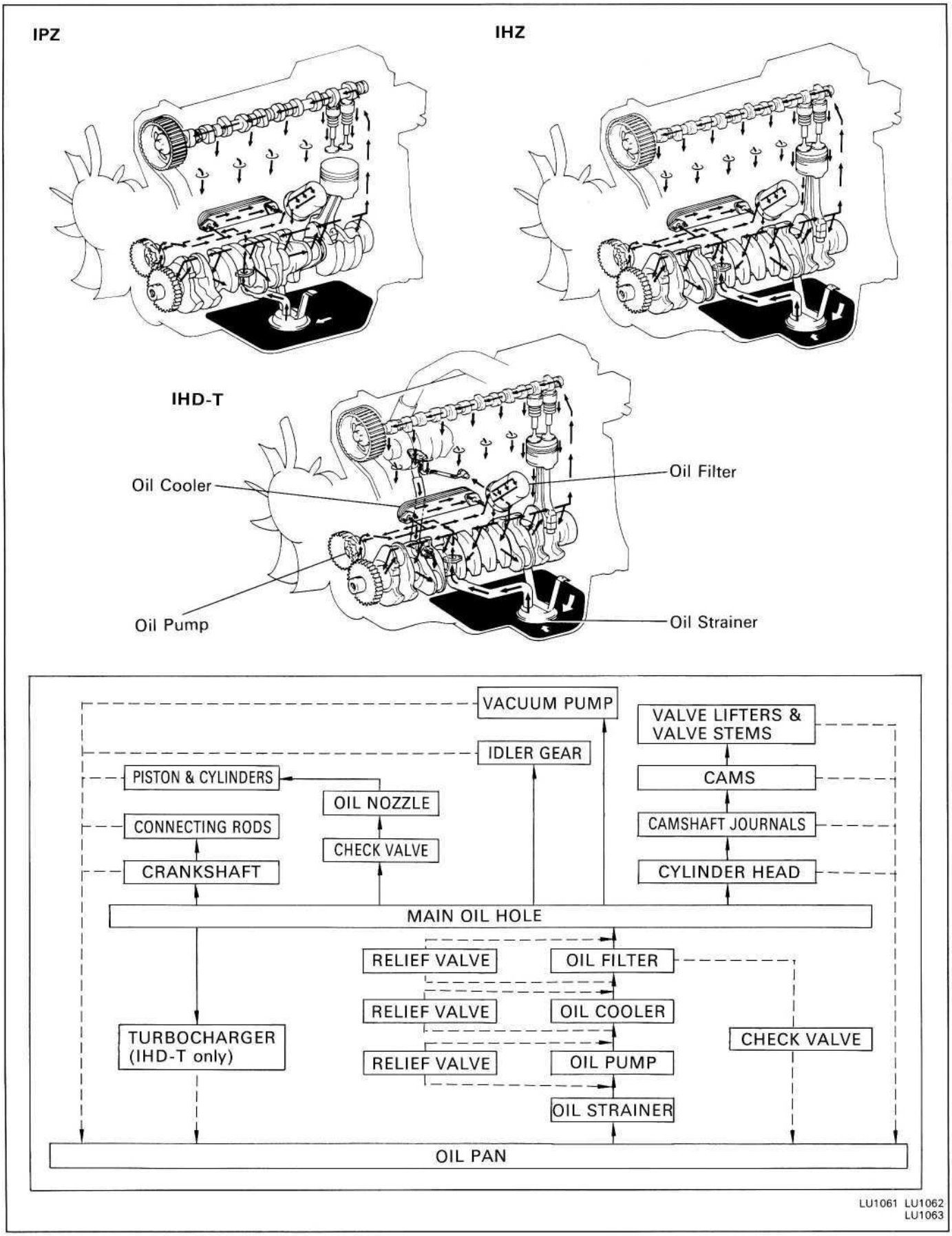

A pressure feeding lubrication system has been adopted to supply oil to the moving parts of this engine. The lubrication system consists of an oil pan, oil pump, oil filter and other external parts which supply oil to the moving parts in the engine block. The oil circuit is shown in the illustration at the top of the previous page. Oil from the oil pan is pumped up by the oil pump. After it passes through the oil filter, it is fed through the various oil holes in the crankshaft and cylinder block. After passing through the cylinder block and performing its lubricating function, the oil is returned by gravity to the oil pan. A dipstick on the center left side of the cylinder block is provided to check the oil level.

OIL PUMP

The oil pump pumps up oil from the oil pan and sends it under pressure to the various parts of the engine. An oil strainer is mounted in front of the inlet to the oil pump to remove impurities. The oil pump itself is a trochoid type pump, which uses a drive rotor and driven rotor inside the pump body. When the drive rotor rotates, the driven rotor rotates in the same direction. The axis of the driven rotor shaft is different from the center of the driven rotor, so when both rotors rotate, the space between the two rotors changes. Oil is drawn in when the space widens and is discharged when the space becomes narrow.

OIL PRESSURE REGULATOR (RELIEF VALVE)

At high engine speeds, the oil pump supplies more oil to each part that is necessary. For this reason, an oil pressure regulator which works to prevent oversupply of oil is installed on the oil pump. During normal oil supply, a coil spring and valve keep the by-pass closed, but when too much oil is being supplied, the pressure becomes extremely high, overpowering the force Of the spring and opening the valves. This allows the excess oil to flow through the valve and return to the inlet of the oil pump.

OIL FILTER

The oil filter is a full flow type filter with a built-in paper filter element. Particles of metal from wear, airborn dirt, carbon and other impurities can get in the oil during use and could cause accelerated wear or siezing if allowed to circulate through the engine. The oil filter, integrated into the oil line, removes these impurities as the oil passes through it. The filter is mounted outside the engine to simplify replacement of the filter element. A relief valve is also included ahead of the filter element to relieve the high oil pressure in case the filter element becomes clogged with impurities. The relief valve opens when the oil pressure overpowers the force of the spring. Oil passing through the relief valve by-passes the oil filter and flows directly into the main oil hole in the engine.

TROUBLESHOOTING

Problem	Possible cause	Remedy	Page
Oil leakage	Cylinder head, cylinder block or oil pump body damaged or cracked	Repair as necessary	
	Oil seal faulty	Replace oil seal	EM-48, 49, 72, 105
	Gasket faulty	Replace gasket	
Low oil pressure	Oil leskage	Repair as necessary	
	Relief valve faulty	Repair relief valve	LU-8
	Oil pump faulty	Repair oil pump	LU-9
	Engine oil poor quality	Replace engine oil	LU-6
	Crankshaft bearing faulty	Replace bearing	EM-84
	Connecting rod bearing faulty	Replace bearing	EM-84
	Oil filter clogged	Replace oil filter	LU-6
High oil pressure	Relief valve faulty	Repair relief valve	LU-8

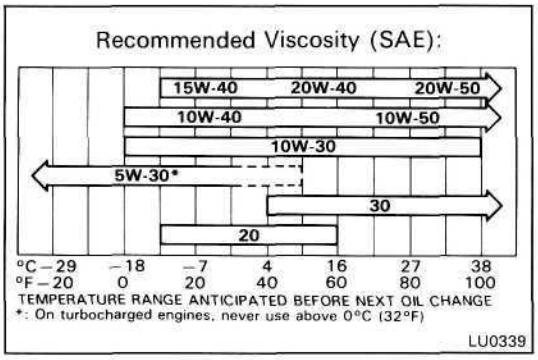

OIL PRESSURE CHECK

1. CHECK ENGINE OIL QUALITY

Check the oil for deterioration, entry of water, discoloring or thinning.

If the quality is poor, replace the oil.

Use API grade CD or better and recommended viscosity oil. (Europe)

Use API grade CC, CD or better and recommended viscosity oil. (Others)

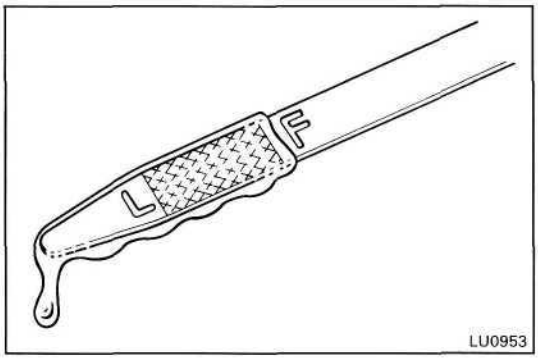

2. CHECK ENGINE OIL LEVEL

The oil level should be between the "L" and "F" marks on the dipstick.

If low, check for leakage and add oil up to "F" mark.

NOTICE: Do not fill with engine oil above the "F" mark.

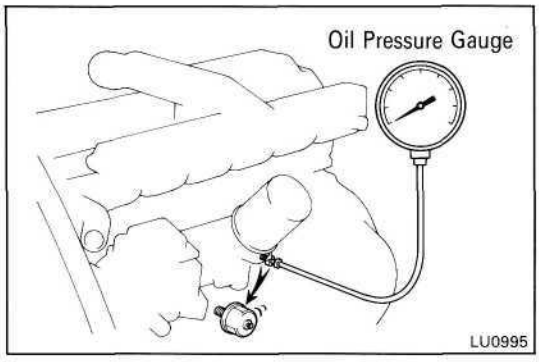

3. REMOVE OIL PRESSURE SENDER GAUGE

4. INSTALL OIL PRESSURE GAUGE

5. WARM UP ENGINE

Allow the engine to reach normal operating temperature.

6. CHECK OIL PRESSURE

Oil pressure:

At idling	**0.3 kg/cm^2 (4.3 psi, 29 kPa) or more**
At 3,000 rpm	**2.5 kg/cm^2 (36 psi, 245 kPa) or more**

7. REMOVE OIL PRESSURE GAUGE

8. REINSTALL OIL PRESSURE SENDER GAUGE

9. START ENGINE AND CHECK FOR LEAKS

REPLACEMENT OF ENGINE OIL AND OIL FILTER

NOTICE:

- **Prolonged and repeated contact with mineral oil will result in the removal of natural fats from the skin, leading to** dryness, **irritation and dermatitis. In addition, used engine oil contains potentially harmful contaminants which may cause skin cancer. Adequate means of skin protection and washing facilities should be provided.**
- **Care should be taken, therefore, when changing engine oil, to minimize the frequency and length of time your skin is exposed to used engine oil. Protective clothing and gloves, that cannot be penetrated by oil, should be worn. The skin should be thorougthly washed with soap and water, or use waterless hand cleaner, to remove any used engine oil. Do not use gasoline, thinners, or solvents.**
- **In order to preserve the environment, used oil and used oil filters must be disposed of only at designated disposal sites.**

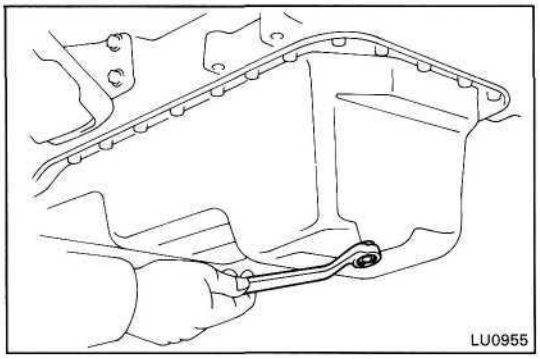

1. DRAIN ENGINE OIL

(a) Remove the oil filler cap.

(b) Remove the oil drain plug, and drain the oil into a container.

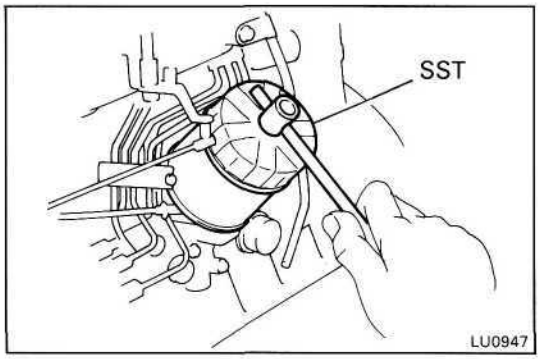

2. REPLACE OIL FILTER

(a) Using SST, remove the oil filter.

SST 09228-10001

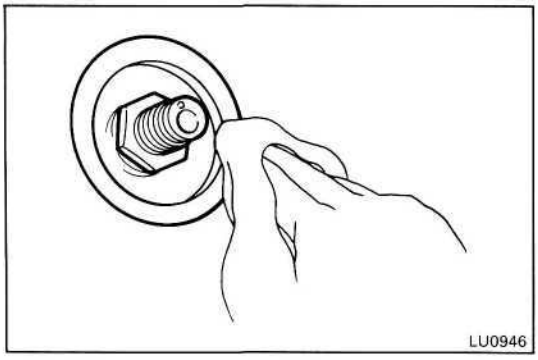

(b) Clean and check the oil filter installation surface.

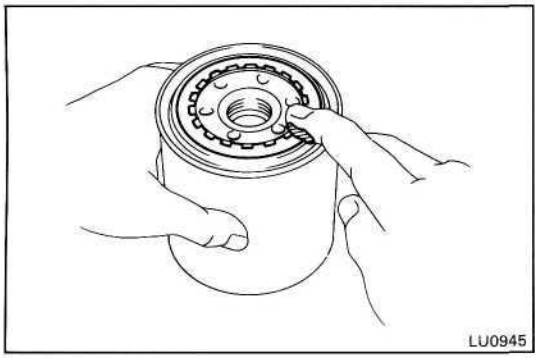

(c) Apply clean engine oil to the gasket of a new oil filter.

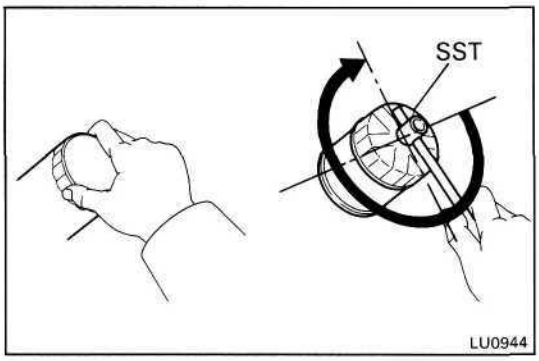

(d) Lightly screw the oil filter into place, and tighten it until the gasket contacts the seat.

(e) Using SST, tighten it additional 3/4 turn.

SST 09228-10001

3. FILL WITH ENGINE OIL

(a) Clean and install the oil drain plug with a new gasket.

Torque: 250 kg-cm (18 ft-lb, 25 N-m)

(b) Fill with new engine oil (API grade CC (ex. Europe), CD or better and recommended viscosity oil).

Capacity (PZJ70, 73. 75):
Drain and refill
w/ Oil filter change
9.0 liters (9.5 US qts, 7.9 Imp. qts)
w/o Oil filter change
7.7 liters (8.1 US qts, 6.8 Imp. qts)
Dry fill 9.3 liters (9.8 US qts, 8.2 Imp. qts)

Capacity (HZJ70, 73, 75):
Drain and refill
w/ Oil filter change
9.5 liters (10.0 US qts, 8.4 Imp. qts)
w/o Oil filter change
8.2 liters (8.7 US qts, 7.2 Imp. qts)
Dry fill 9.8 liters (10.4 US qts, 8.6 Imp. qts)

Capacity (HZJ80 and HDJ80):
Drain and refill
w/ Oil filter change
9.3 liters (9.8 US qts, 8.1 Imp. qts)
w/o Oil filter change
8.0 liters (8.5 US qts, 7.0 Imp. qts)
Dry fill 9.6 liters (10.1 US qts, 8.4 Imp. qts)

Capacity (HZB30 and HDB30):
Drain and refill
w/ Oil filter change
9.8 liters (10.4 US qts, 8.6 Imp. qts)
w/o Oil filter change
8.5 liters (9.0 US qts, 7.5 Imp. qts)
Dry fill 10.1 liters (10.7 US qts, 8.9 Imp. qts)

(c) Reinstall the oil filler cap.

4. START ENGINE AND CHECK FOR LEAKS

5. RECHECK ENGINE OIL LEVEL (See page LU-5)

OIL PUMP

COMPONENT

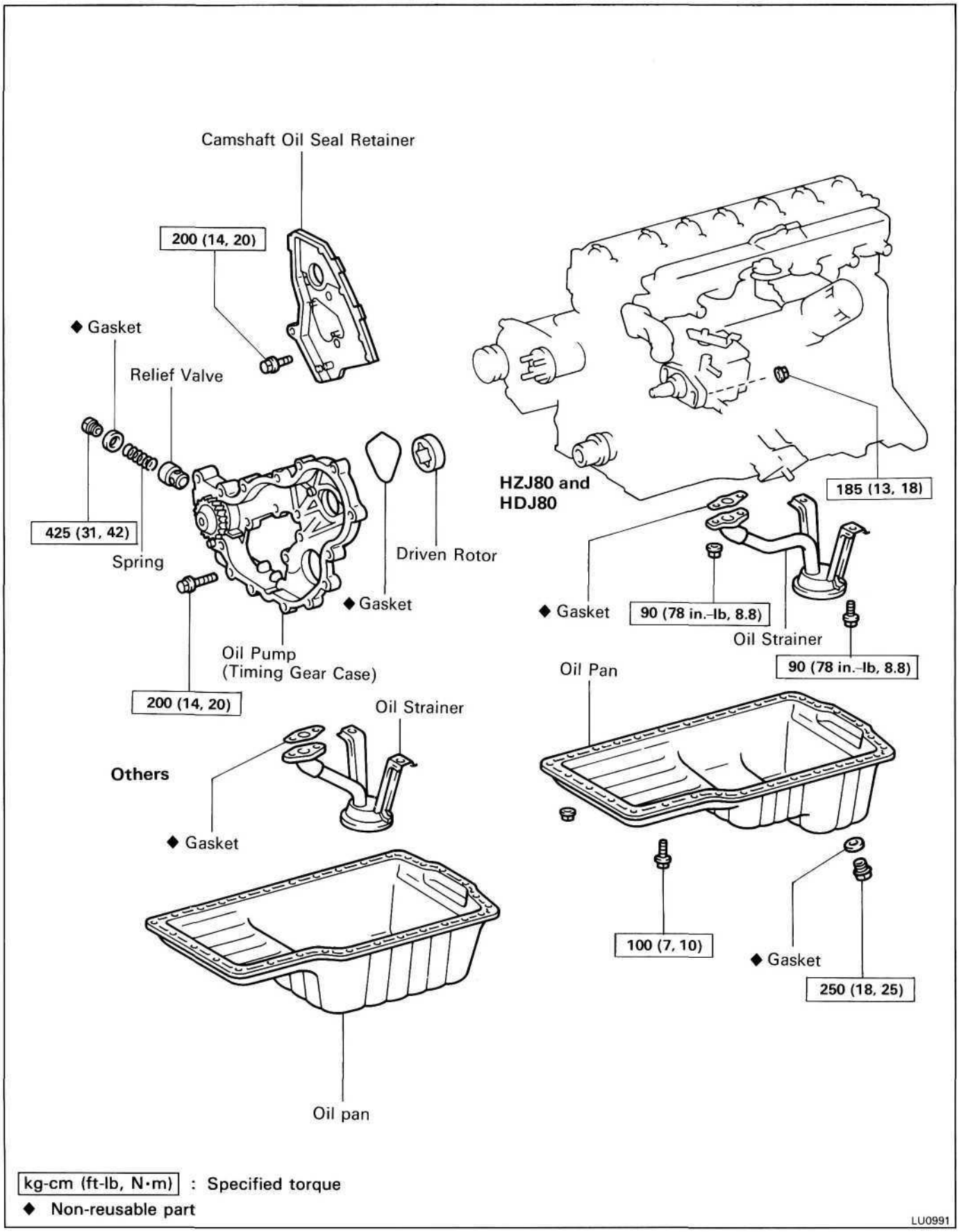

kg-cm (ft-lb, N·m) : Specified torque

◆ Non-reusable part

LU0991

REMOVAL OF OIL PUMP

(See page LU-8)

HINT: When repairing the oil pump, the oil pan and strainer should be removed and cleaned.

1. **DRAIN ENGINE COOLANT (See page CO-4)**

2. **DRAIN ENGINE OIL (See page LU-6)**

3. **REMOVE TIMING GEARS**
   (See steps 1 to 12 on pages EM-43 to 45)

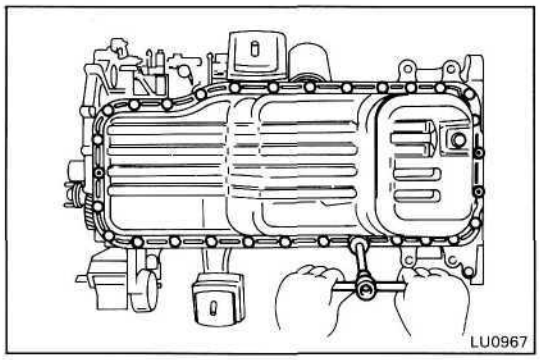

4. **REMOVE OIL PAN**

   (a) Remove the twenty-three bolts (1PZ) or twenty-seven bolts (1 HZ and IHD-T) and three nuts.

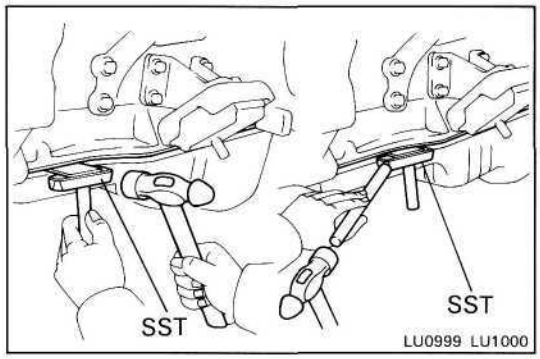

   (b) Insert the blade of SST between the cylinder block and oil pan, cut off applied sealer and remove the oil pan.

SST 09032-001 00

NOTICE:
- **Do not use SST for the timing gear case side and rear oil seal retainer.**
- **Be careful not to damage the oil pan flange.**

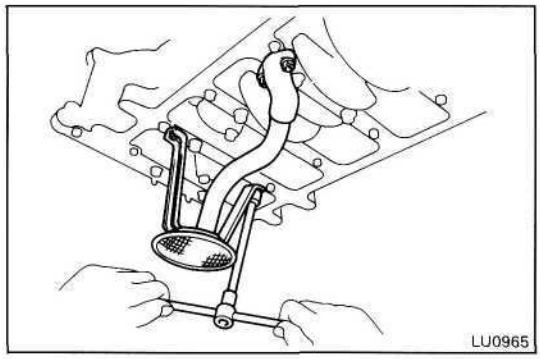

5. **REMOVE OIL STRAINER**

   Remove the two bolts, two nuts, oil strainer and gasket.

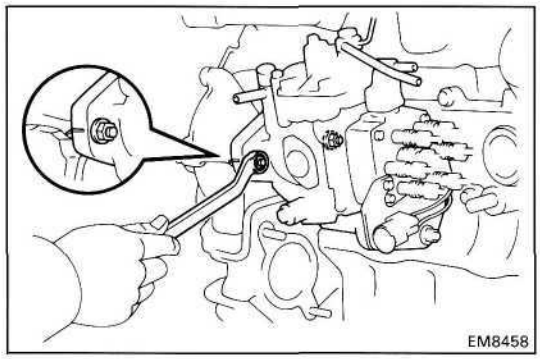

6. **REMOVE OIL PUMP (TIMING GEAR CASE)**

   (a) Before removing the two nuts holding the timing gear case to the injection pump, check if the injection pump period lines are aligned.

   If not, place new matchmarks for reinstallation.

   (b) Remove the two nuts.

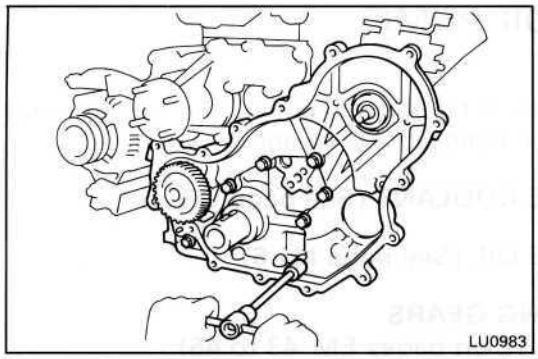

(c) Remove the seven bolts, timing gear case and gasket.

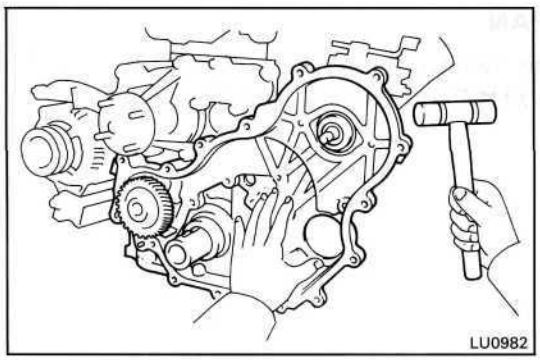

(d) Using a plastic-faced hammer, lightly tap out the timing gear case.

(e) Remove the gasket.

DISASSEMBLY OF OIL PUMP

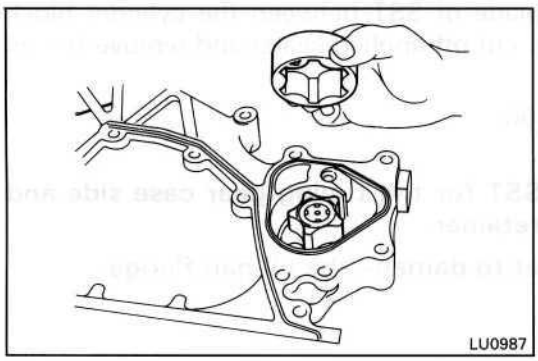

1. REMOVE DRIVEN ROTOR

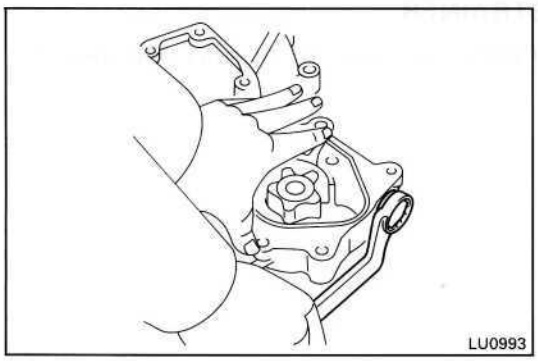

2. REMOVE RELIEF VALVE

Remove the plug, gasket, spring and relief valve.

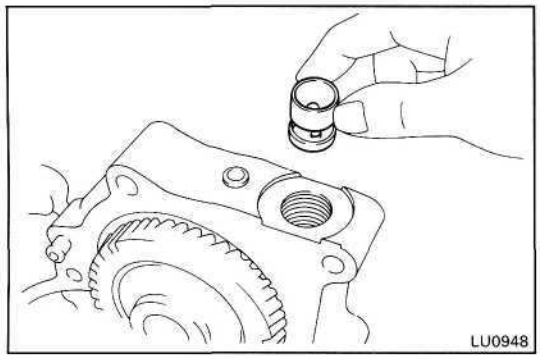

INSPECTION OF OIL PUMP

1. INSPECT RELIEF VALVE

Coat the valve with engine oil and check that it falls smoothly into the valve hole by its own weight.

If it does not, replace the relief valve. If necessary, replace the oil pump assembly.

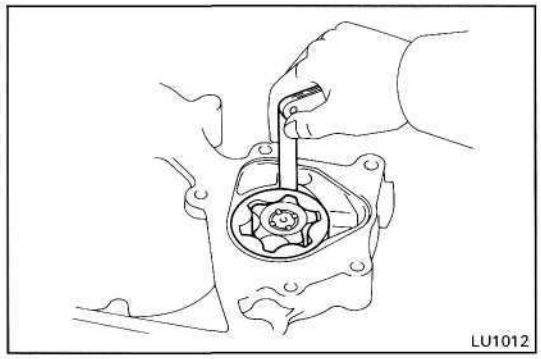

2. INSPECT DRIVE AND DRIVEN ROTORS

A. Inspect rotor body clearance

Using a thickness gauge, measure the clearance between the driven rotor and body.

Standard body clearance: 0.10-0.17 mm (0.039-0.0067 in.)
Maximum body clearance: 0.20 mm (0.0079 in.)

If the body clearance is greater than maximum, replace the oil pump assembly.

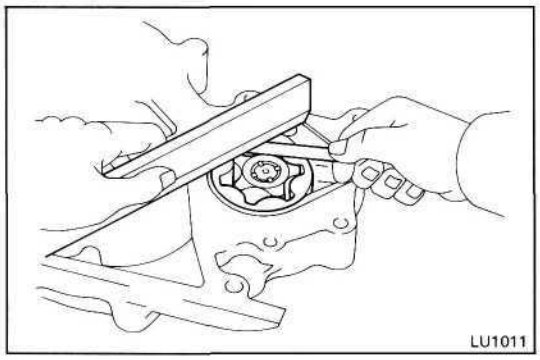

B. Inspect rotor side clearance

Using a thickness gauge and precision straight edge, measure the clearance between the rotors and precision straight edge.

Standard side clearance: 0.03-0.09 mm (0.0012-0.0035 in.)
Maximum side clearance: 0.15 mm (0.0059 in.)

If the side clearance is greater than maximum, replace the oil pump assembly.

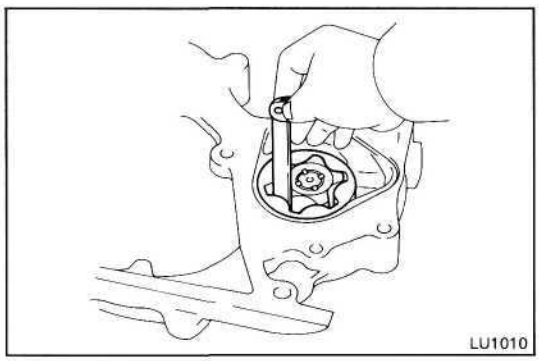

C. Inspect rotor tip clearance

Using a thickness gauge, measure the clearance between the drive and driven rotors.

Standard tip clearance: 0.08 — 0.16 mm (0.0031 - 0.0063 in.)
Maximum tip clearance: 0.21 mm (0.0083 in.)

If the tip clearance is greater than maximum, replace the oil pump assembly.

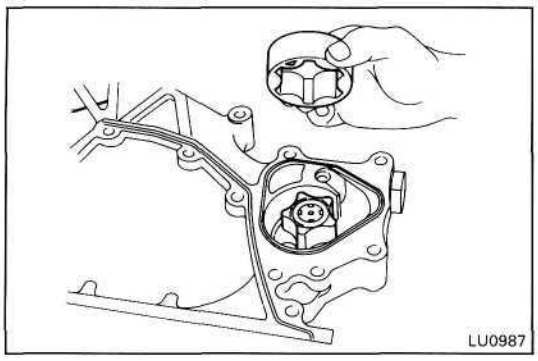

ASSEMBLY OF OIL PUMP

(See page LU-8)

1. INSTALL DRIVEN ROTOR

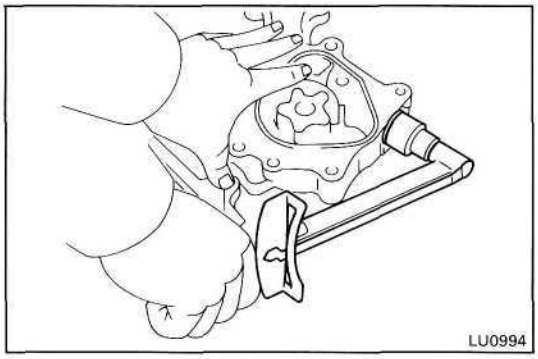

2. INSTALL RELIEF VALVE

(a) Insert the relief valve and spring into the installation hole of the timing gear case.

(b) Install a new gasket and the plug.

Torque: 425 kg-cm (31 ft-lb, 42 N-m)

INSTALLATION OF OIL PUMP

(See page LU-8)

1. INSTALL OIL PUMP (TIMING GEAR CASE)

(a) Remove any old packing (FIPG) material and be careful not to drop any oil on the contact surfaces of the timing gear case and cylinder block.

- Using a razor blade and gasket scraper, remove all the old packing (FIPG) material from the gasket surfaces and sealing groove.
- Thoroughly clean all components to remove all the loose material.
- Using a non-residue solvent, clean both sealing surfaces.

(b) Apply seal packing to the timing gear case as shown in the illustration.

Seal packing: Part No.08826-00080 or equivalent

- Install a nozzle that has been cut to a 2 - 3 mm (0.08-0.12 in.) opening.
- Parts must be assembled within 5 minutes of application. Otherwise the material must be removed and reapplied.
- Immediately remove nozzle from the tube and reinstall cap.

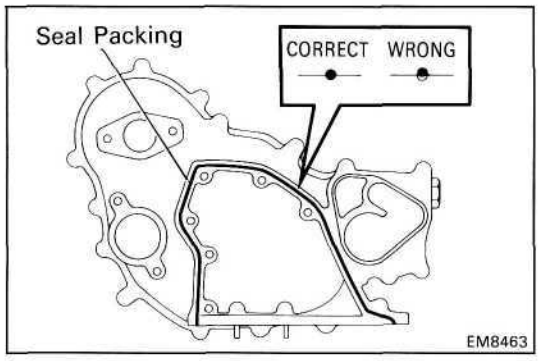

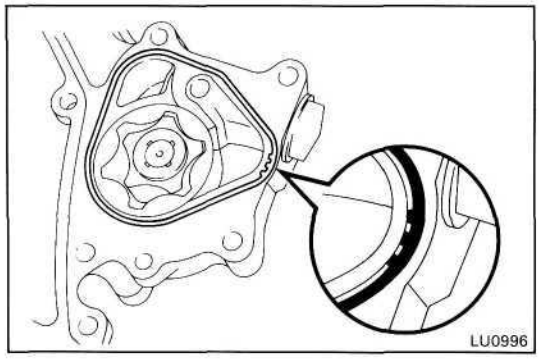

(c) Place a new gasket into the groove of the timing gear case as shown in the illustration.

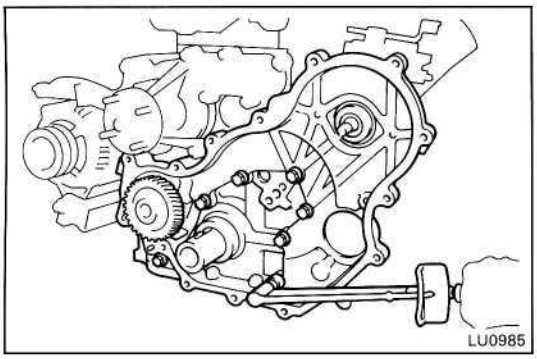

(d) Install the timing gear case with the seven bolts.

Torque: 200 kg-cm (14 ft-lb, 20 N-m)

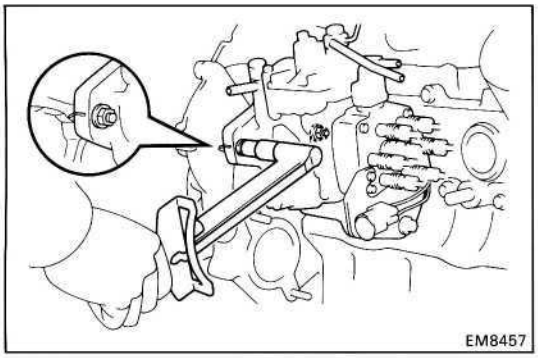

(e) Install the two nuts holding the injection pump to the timing gear case.

Torque: 185 kg-cm (13 ft-lb, 18 N-m)

(f) Check that the injection pump period lines (or matchmarks) are aligned.

If not correct, align the period lines (or matchmarks) by tilting the injection pump.

2. POUR ENGINE OIL INTO OIL PUMP

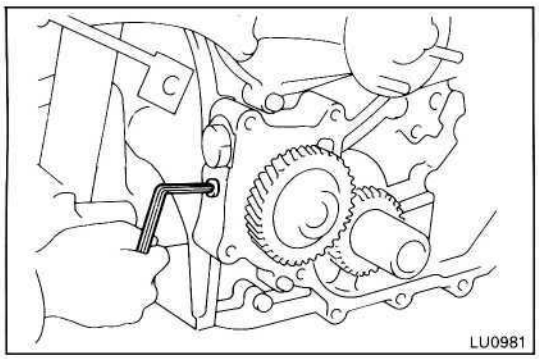

(a) Using a 5 mm hexagon wrench, remove the taper screw plug.

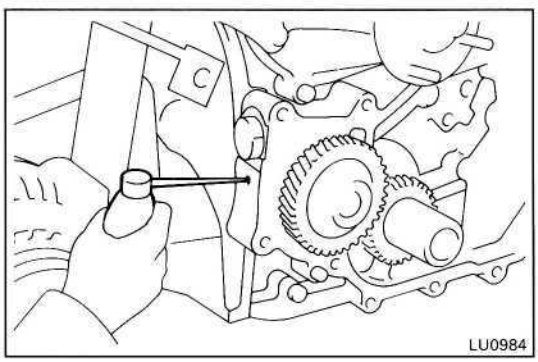

(b) Pour in approx. 10 cc (0.061 cu in.) of engine oil into the oil pump.

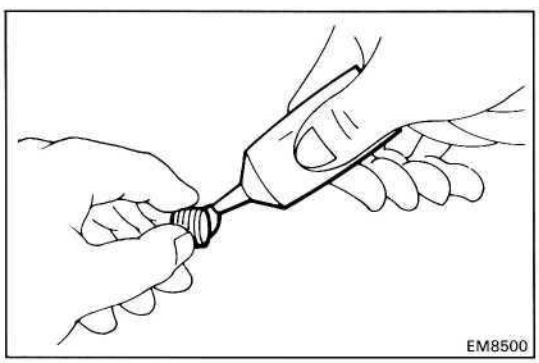

(c) Apply adheshive to two or three threads of the taper screw.

Adhesive: Part No. 08833-00070, THREE BOND 1324 or equivalent

(d) Using a 5 mm hexagon wrench, install the taper screw.

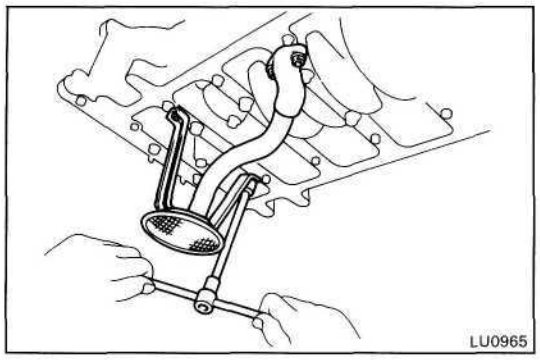

3. INSTALL OIL STRAINER

Install a new gasket and the oil strainer with the two bolts and two nuts.

Torque: 90 kg-cm (78 in.-lb, 8.8 N·m)

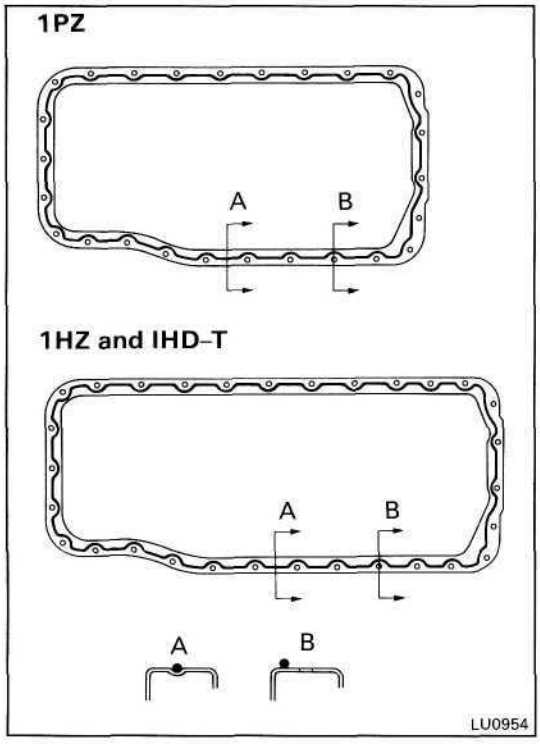

4. INSTALL OIL PAN

(a) Remove any old packing (FIPG) material and be careful not to drop any oil on the contact surfaces of the oil pan and cylinder block.

- Using a razor blade and gasket scraper, remove all the old packing (FIPG) material from the gasket surfaces and sealing groove.
- Thoroughly clean all components to remove all the loose material.
- Using a non-residue solvent, clean both sealing surfaces.

NOTICE: Do not use a solvent which will affect the painted surfaces.

(b) Apply seal packing to the oil pan as shown in the illustration.

Seal packing: Part No.08826-00080 or equivalent

- Install a nozzle that has been cut to a 5 mm (0.20 in.) opening.
- Parts must be assembled within 5 minutes of application. Otherwise the material must be removed and reapplied. *
- Immediately remove nozzle from the tube and reinstall cap.

(c) Install the oil pan with the twenty-three bolts (1 PZ) or twenty-seven bolts (1 HZ and 1 HD-T) and three nuts.

Torque: 100 kg-cm (7 ft-lb, 10 N·m)

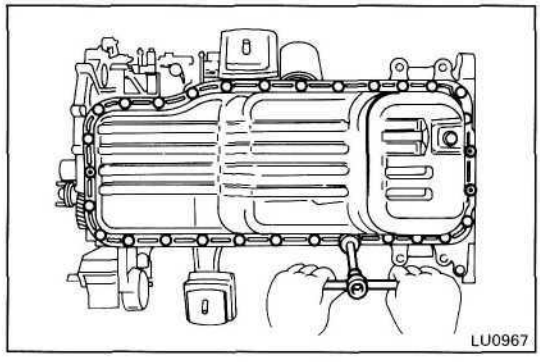

5. INSTALL TIMING GEARS

(See steps 2 to 12 on pages EM-50 to 53)

6. FILL WITH ENGINE OIL (See page LU-7)

7. FILL WITH ENGINE COOLANT (See page CO-5)

8. START ENGINE AND CHECK FOR LEAKS

OIL COOLER, RELIEF VALVE AND CHECK VALVE

COMPONENTS

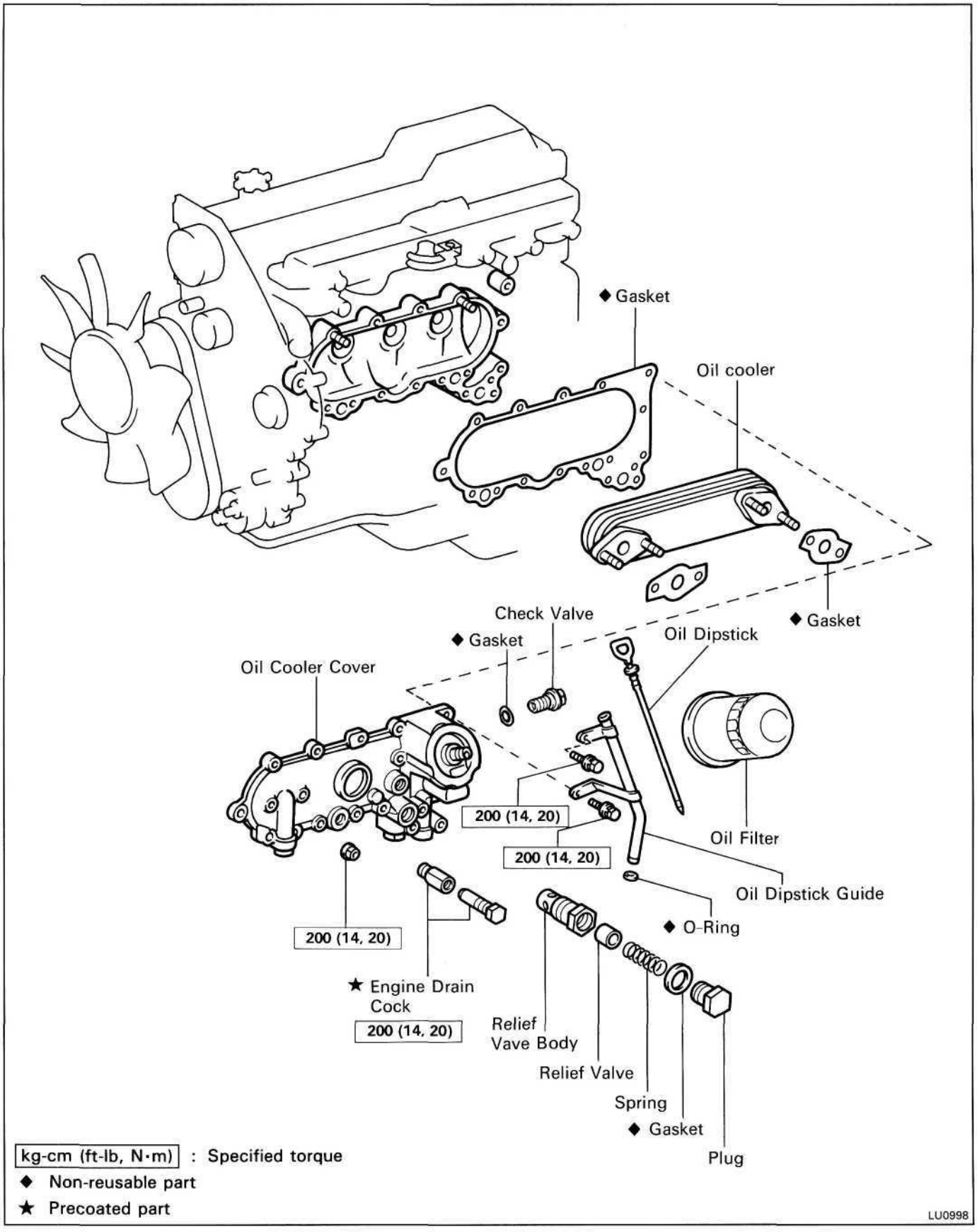

REMOVAL OF OIL COOLER, RELIEF VALVE AND CHECK VALVE

(See page LU-15)

1. **DRAIN ENGINE COOLANT (See page CO-4)**
2. **REMOVE OIL FILTER (Seepage LU-6)**
3. **REMOVE INJECTION PUMP (See page FU-27)**

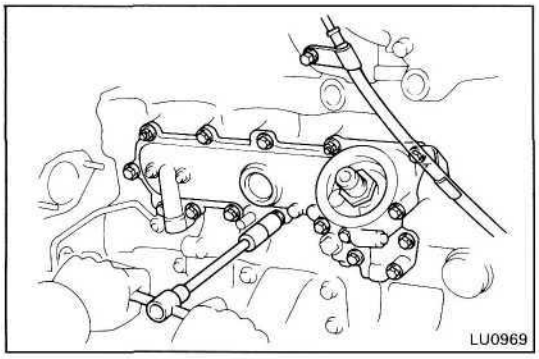

4. **REMOVE OIL DIPSTICK AND GUIDE**
   (a) Remove the two bolts, oil dipstick and guide.
   (b) Remove the oil ring from the oil dipstick guide.
5. **REMOVE OIL COOLER AND OIL COOLER COVER ASSEMBLY**
   Remove the thirteen bolts, two nuts, oil cooler and oil cooler assembly and gasket.

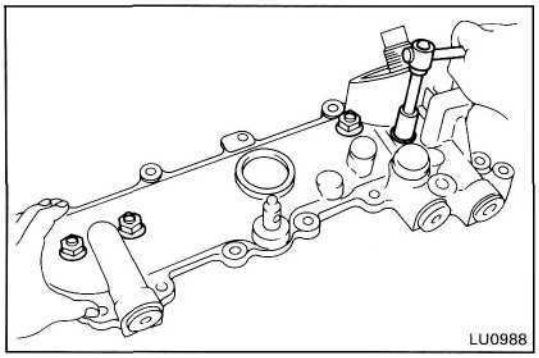

6. **SEPARATE OIL COOLER AND OIL COOLER COVER**
   Remove the four nuts, oil cooler and two gaskets from the oil cooler cover.

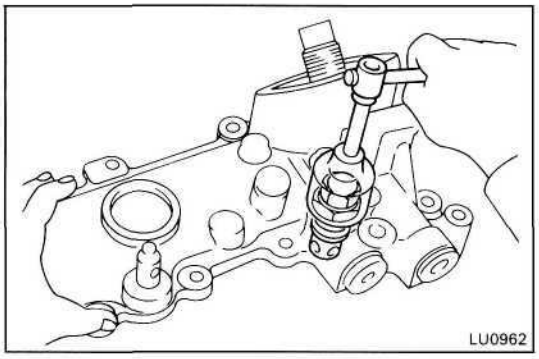

7. **REMOVE RELIEF VALVE**
   Remove the relief valve and gasket.

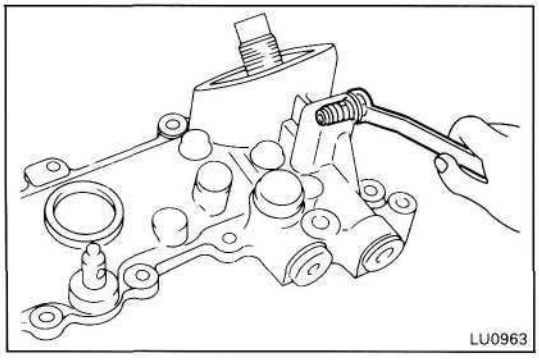

8. **REMOVE CHECK VALVE**
   Remove the check valve and gasket.

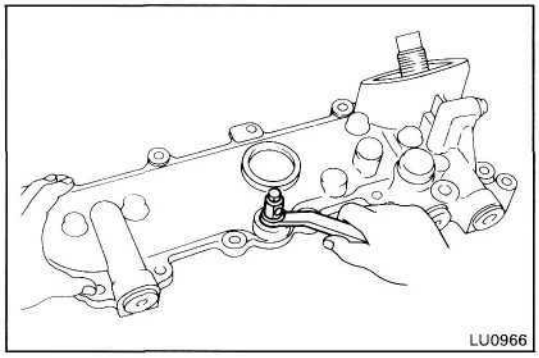

9. REMOVE ENGINE DRAIN COCK

INSPECTION OF OIL COOLER, RELIEF VALVE AND CHECK VALVE

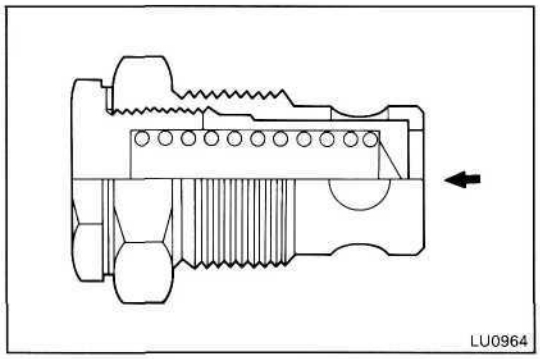

1. INSPECT RELIEF VALVE

Push the valve with a wooden stick to check if it is stuck.
If stuck, replace the relief valve.

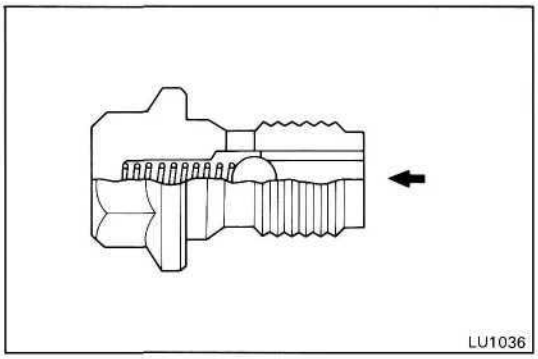

2. INSPECT CHECK VALVE

Push the valve with a wooden stick to check if it is stuck.
If stuck, replace the check valve.

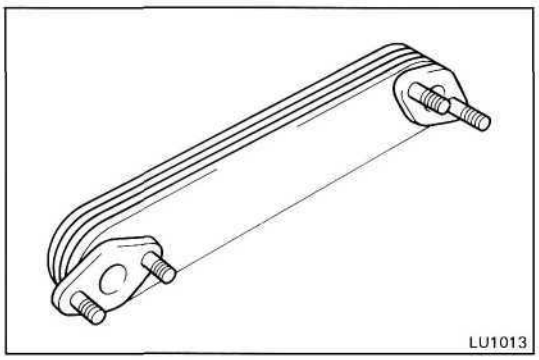

3. INSPECT OIL COOLER

Check the oil cooler for damage or clogging.
If necessary, replace the oil cooler.

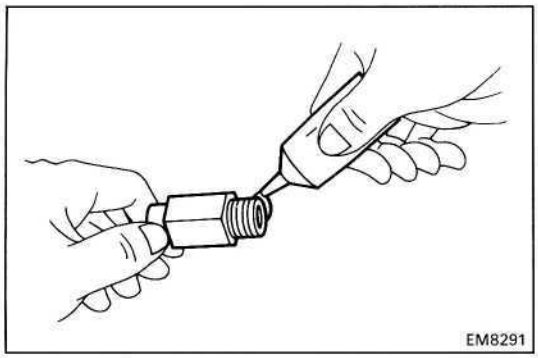

INSTALLATION OF OIL COOLER, RELIEF VALVE AND CHECK VALVE

(See page LU-15)

1. INSTALL ENGINE DRAIN COCK

(a) Apply adhesive to two or three threads of the drain cock.

Adhesive: Part No. 08833-00070, THREE BOND 1324 or equivalent

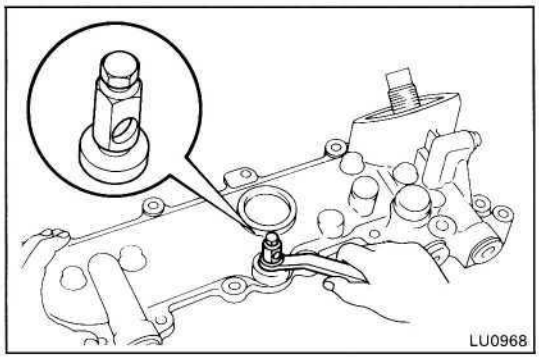

(b) Install and torque the drain cock as shown.

Torque: 200 kg-cm (14 ft-lb, 20 N·m)

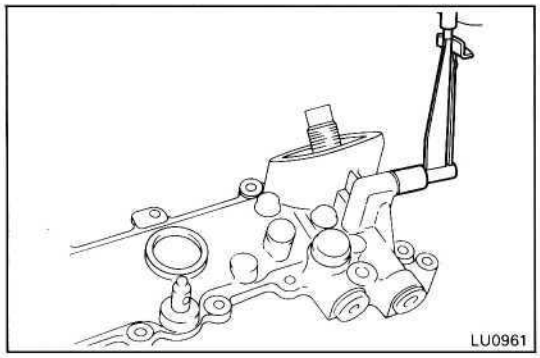

2. INSTALL CHECK VALVE

Install the check valve with a new gasket.

Torque: 275 kg-cm (20 ft-lb, 27 N-m)

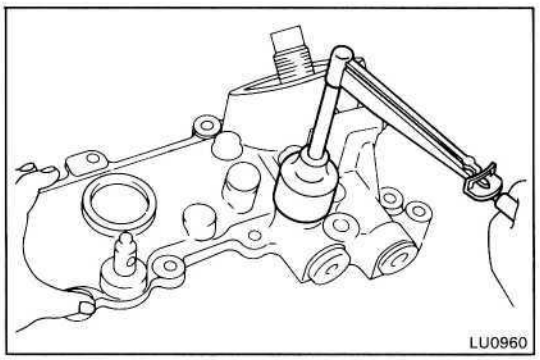

3. INSTALL RELIEF VALVE

Install the relief valve with a new gasket.

Torque: 400 kg-cm (29 ft-lb, 39 N·m)

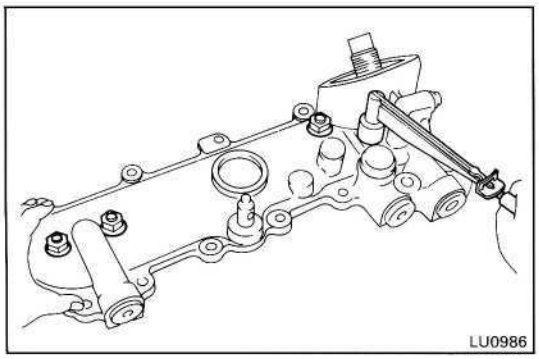

4. ASSEMBLE OIL COOLER AND OIL COOLER COVER

Install two new gaskets and the oil cooler to the oil cooler cover with the four nuts.

Torque: 200 kg-cm (14 ft-lb, 20 N-m)

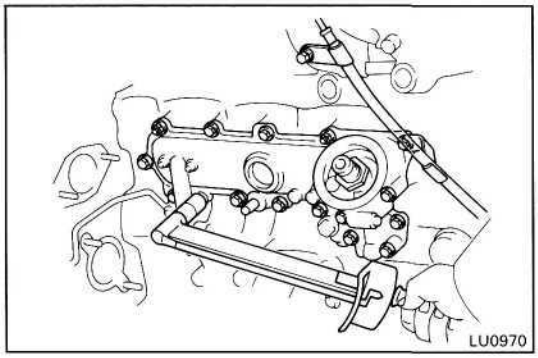

5. INSTALL OIL COOLER AND OIL COOLER COVER ASSEMBLY

Install a new gasket, the oil cooler and oil cooler cover assembly with the thirteen bolts and two nuts.

Torque: 200 kg-cm (14 ft-lb, 20 N-m)

6. INSTALL OIL DIPSTICK GUIDE AND DIPSTICK

(a) Install a new O-ring to the oil dipstick guide.

(b) Apply engine oil to the new O-ring.

(c) Install the oil dipstick and guide with the two bolts.

Torque:
Intake manifold side
200 kg-cm (14 ft-lb, 20 N-m)
Oil cooler cover side
200 kg-cm (14 ft-lb, 20 N-m)

7. INSTALL INJECTION PUMP
(See page FU-93)

8. INSTALL OIL FILTER (See page LU-6)

9. FILL WITH ENGINE COOLANT (See page CO-5)

10. START ENGINE AND CHECK FOR LEAKS

11. CHECK ENGINE OIL (See page LU-5)

OIL NOZZLES AND CHECK VALVES

COMPONENTS

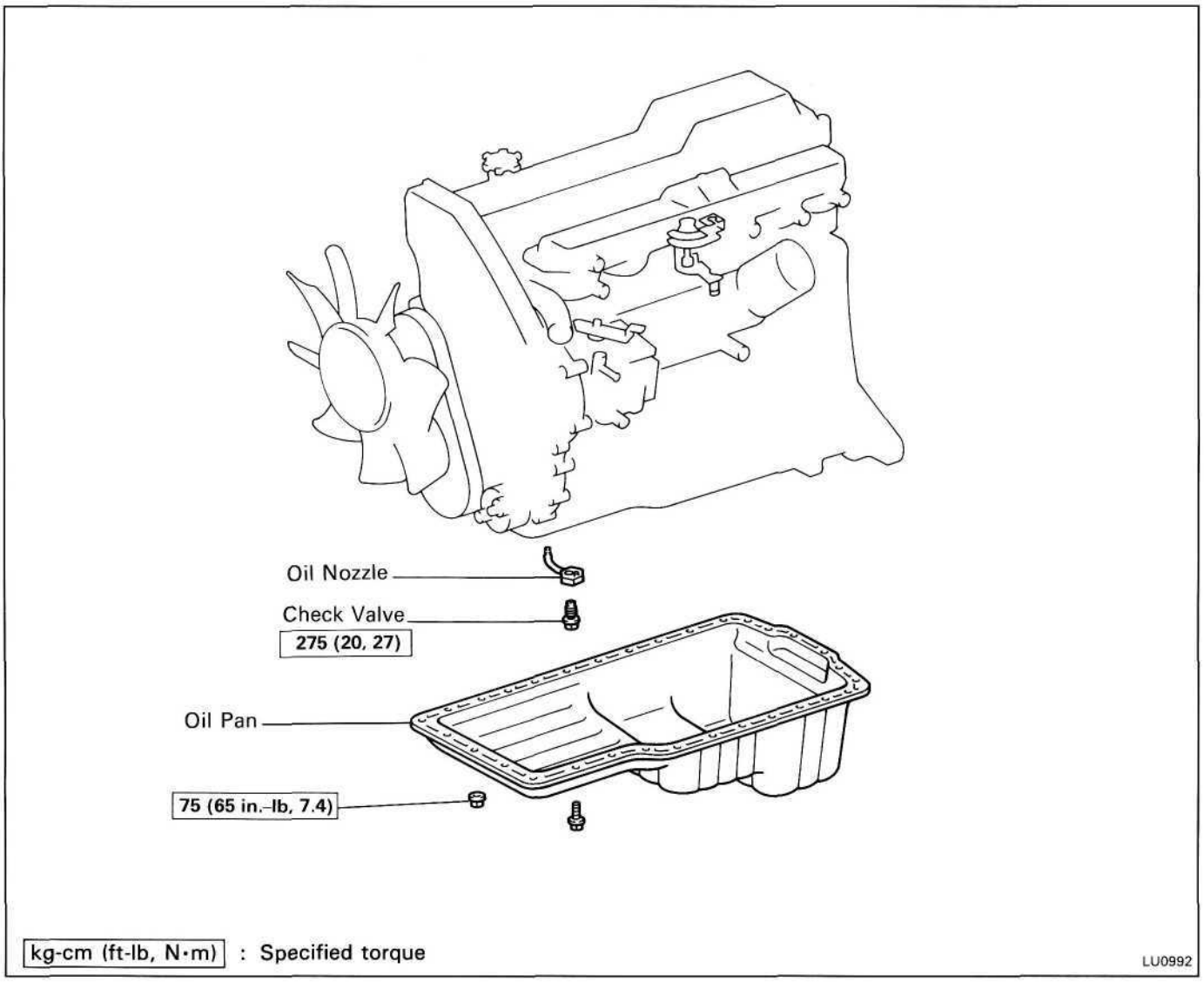

REMOVAL OF OIL NOZZLES AND CHECK VALVES

1. **DRAIN ENGINE OIL (See page LU-6)**

2. **REMOVE OIL PAN**
   (See step 4 on page LU-9)

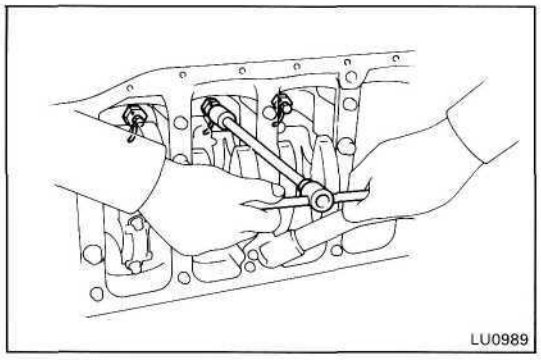

3. **REMOVE CHECK VALVE AND OIL NOZZLES**

   Remove the five (1 PZ) or six (1 HZ and 1HD-T) check valves and oil nozzles.

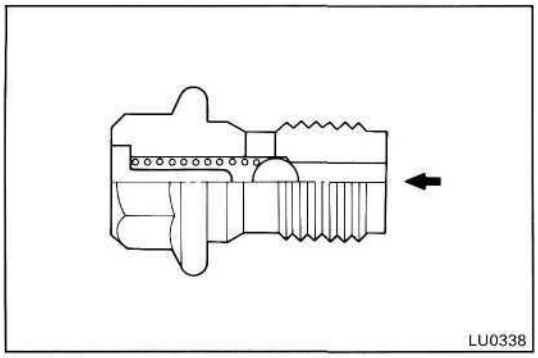

INSPECTION OF OIL NOZZLES AND CHECK VALVES

1. INSPECT CHECK VALVES

Push the valve with a wooden stick to check if it is stuck.

If stuck, replace the check valve.

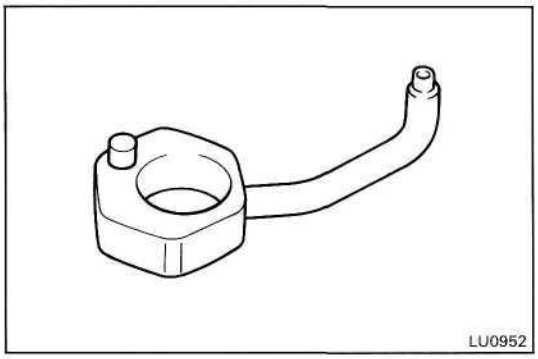

2. INSPECT OIL NOZZLES

Check the oil nozzles for damage or clogging.

If necessary, replace the oil nozzle.

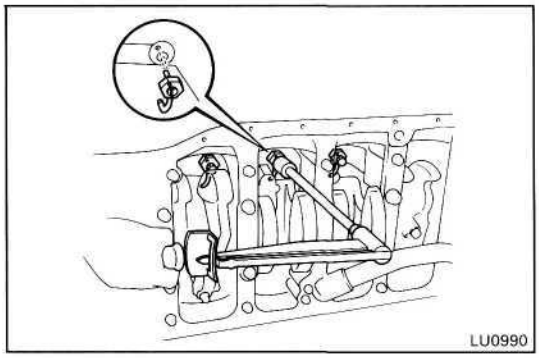

INSTALLATION OF OIL NOZZLES AND CHECK VALVES

(See page LU-20)

1. INSTALL OIL NOZZLES AND CHECK VALVES

(a) Align the pin of the oil nozzle with the pin hole of the cylinder block.

(b) Install the oil nozzle with the check valve. Install the five (1PZ) or six (1HZ and 1HD-T) oil nozzles and check valves.

Torque: 275 kg-cm (20 ft-lb, 27 N·m)

2. INSTALL OIL PAN

(See step 4 on page LU-14)

3. FILL WITH ENGINE OIL (See page LU-7)

4. START ENGINE AND CHECK FOR LEAKS

LUBRICANT

Item		Capacity			Classification
		Liters	Us qts	Imp.qts	
Manual transmission oil	G40	2.8	3.0	2.5	API GL-4 or GL-5
	G52	2.6	2.8	2.3	SAE 75W-90
	H41	3.5	3.7	3.1	
	H55F	4.9	5.2	4.3	
	R141F	3.2	3.4	2.8	
	R150F	3.0	3.2	2.6	
	R151F	3.0	3.2	2.6	
Automatic transmission fluid					ATF DEXRON® II
Dry fill					
w/o Oil cooler		15.0	15.9	13.2	
w/ Oil cooler		15.4	16.3	13.6	
Drain and refill		6.0	6.3	5.3	
Transfer oil	G40, G52	2.1	2.2	1.8	API GL-4 or GL-5, SAE90
	H41, H55F	2.2	2.3	1.9	
	R140F, R150F, R151F	2.2	2.3	1.9	
Differential oil					
Front					API GL-5
RJ and LJ series		1.9	2.1	1.7	Above −18°C (0°F) SAE90
FJ, PZJ and HZJ series		2.6	2.7	2.3	Below −18°C (0°F) SAE 80W or 80W-90
Rear (w/o LSD)					API GL-5
RJ and LJ series		1.85	2.0	1.6	Above −18°C (0°F) SAE90
FJ, PZJ and HZJ series		2.5	2.6	2.2	Below −18°C (0°F) SAE80W or 80W-90
Rear (w/ LSD)					API GL-5 for LSD
RJ and LJ series		1.85	2.0	1.6	Above −18°C (0°F) SAE90
FJ, PZJ and HZJ series		2.5	2.6	2.2	Below −18°C (0°F) SAE 80W or 80W-90
Power steering fluid					ATF DEXRON® II
Gear box		0.51	0.54	0.45	
Total		0.8	0.85	0.70	
Steering gear box oil		0.64	0.68	0.56	API GL-4, SAE90
Brake fluid		—	—	—	SAE J1703 or FMVSS No.116 DOT3
P.T.O oil		0.5	0.5	0.4	API service GL-4 or GL-5 SAE 75W-90
Mechanical winch fluid		0.3	0.32	0.26	API GL-4 SAE 85W-90
Electric winch fluid		0.9	0.95	0.79	ATF Type F

STARTING SYSTEM

Page

PRE-HEATING SYSTEM ST-2
Super Glow Type (Europe and Australia) ST-2
Fixed Delay Type (HZJ80 and HDJ80) ex. (Europe and Australia) ST-9
Fixed Delay Type (PZJ, HZJ75, HZB and HDB) ex. (Europe and Australia) ST-11
TROUBLESHOOTING ST-13
STARTING SYSTEM CIRCUIT ST-13
STARTER ST-15
STARTER RELAY (PZJ, HZJ and HDJ) ST-26
STARTER RELAY (HZB and HDB) ST-27
VOLTAGE CONVERTER TIMER (HZJ80 and HDJ80) (w/24 V Starter) ST-28
VOLTAGE CONVERTER RELAY (HZJ80 and HDJ80) (w/24 V Starter) ST-29
24 V HOLD WARNING RELAY (HZJ80 and H DJ80) (w/ 24 V Starter) ST-30

TIMER CHARACTERISTIC DIAGRAM (Cont'd)

(1HZ for Europe)

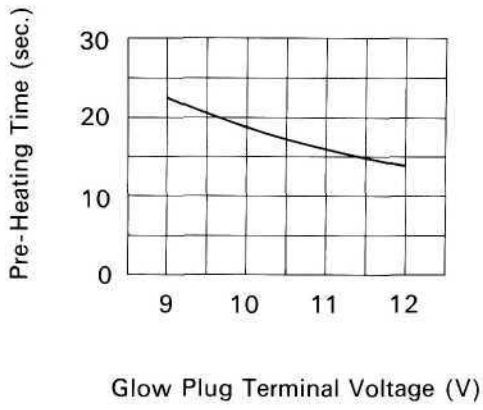

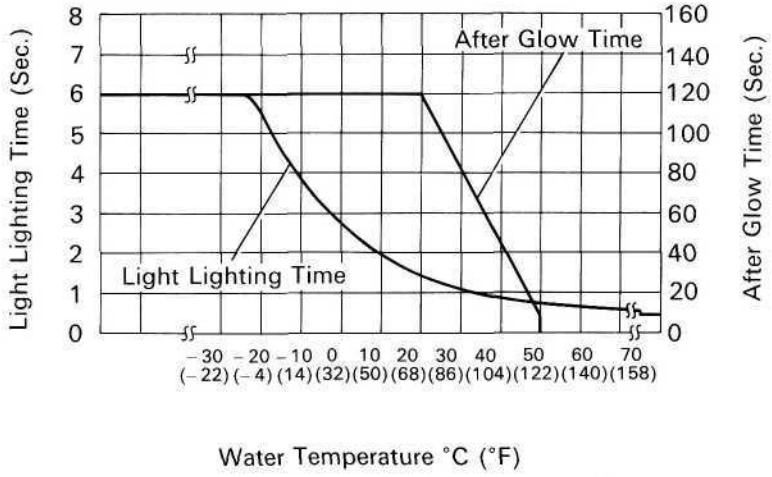

(1HD-T for Europe)

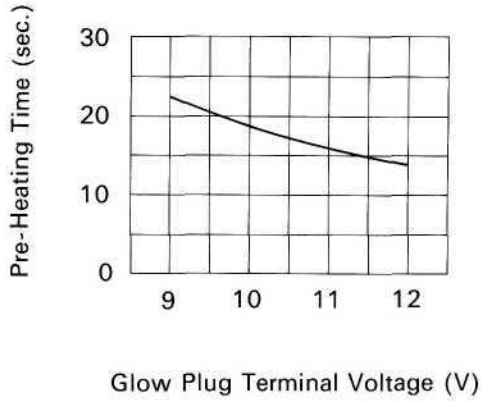

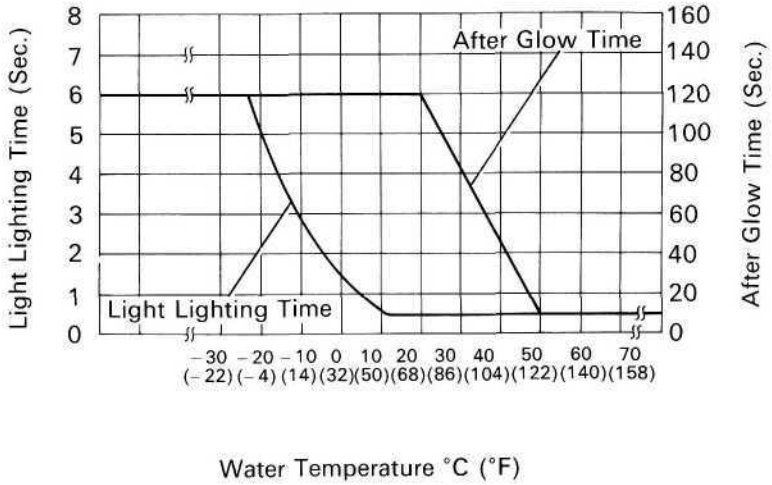

24 V Type

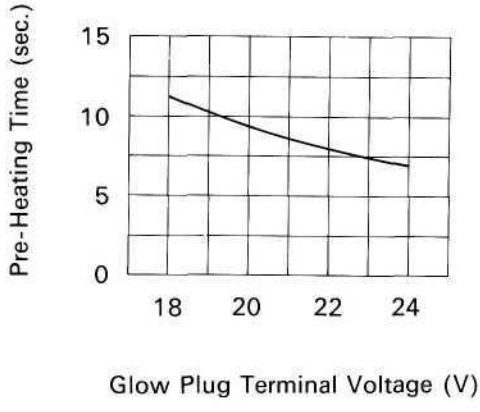

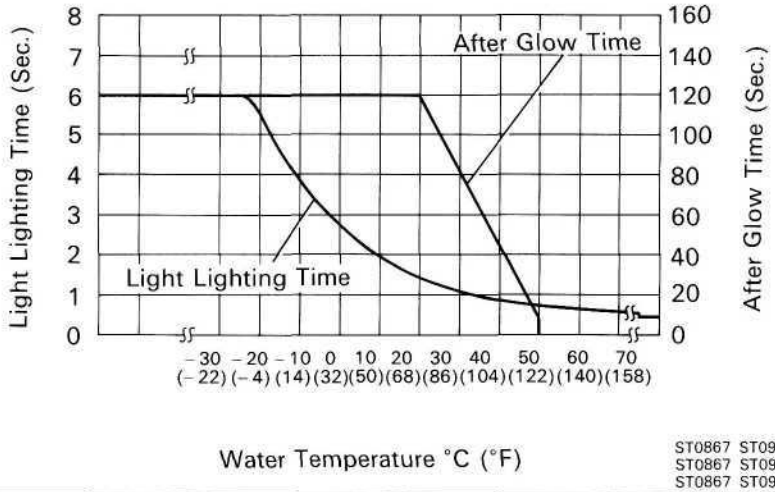

ST0867 ST0900
ST0867 ST0901
ST0867 ST0900

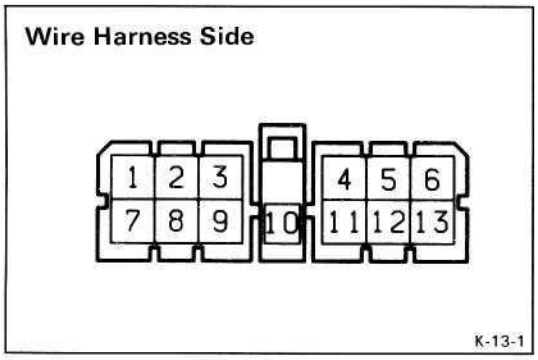

INSPECTION OF COMPONENTS

Pre-Heating Timer

LOCATION:

PZJ, HZJ, HDJ — Under the instrument panel on the passenger side.

HZB, HDB — Under the instrument panel center.

INSPECT PREHEATING TIMER CIRCUIT

Disconnect the connector from the pre-heating timer, and check the connector on the wire harness side as shown in the following chart.

Check for	Tester connection	Condition	Specified value
Continuity	1 – Ground	–	Continuity
Voltage	3 – Ground	Turn starter switch OFF	No voltage
		Turn starter switch ON	Battery voltage
Voltage	4 – Ground	Turn starter switch OFF	No voltage
		Turn starter switch ON	Battery voltage
Continuity	5 – Ground	–	Continuity
Continuity	6 – Ground	–	Continuity
Continuity	7 – Ground	–	Continuity
Continuity	10 – Ground	–	Continuity
Voltage	11 – Ground	Turn starter switch OFF	No voltage
		Turn starter switch START	Battery voltage

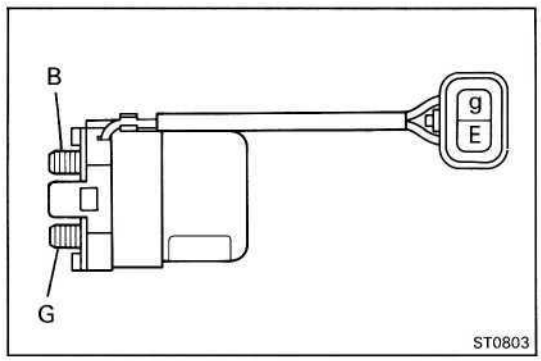

No. 1 Glow Plug Relay

LOCATION: In the engine compartment on the left side.

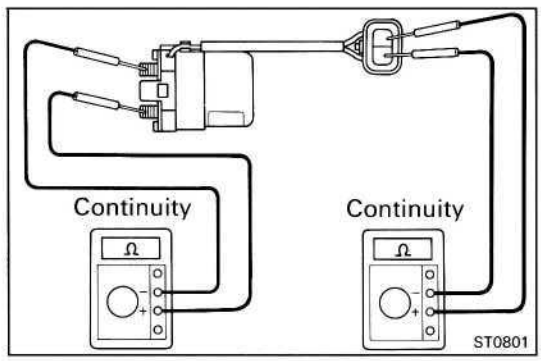

1. INSPECT RELAY CONTINUITY

(a) Using an ohmmeter, check that there is continuity between terminals E and g.

(b) Check that there is no continuity between terminals B and G.

If continuity is not as specified, replace the relay.

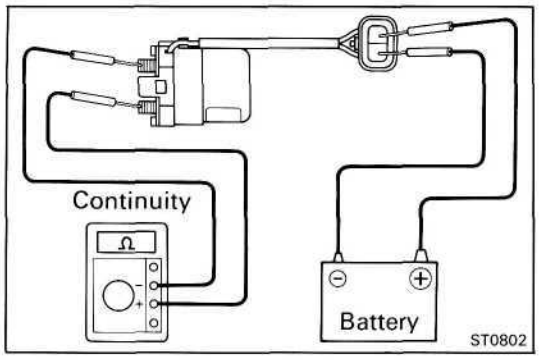

2. INSPECT RELAY OPERATION

(a) Apply battery voltage across terminals E and g.

(b) Using an ohmmeter, check that there is continuity between terminals B and G.

If operation is not as specified, replace the relay.

No.2 Glow Plug Relay (PZJ, HZJ and HDJ)

LOCATION: In the engine compartment on the left side.

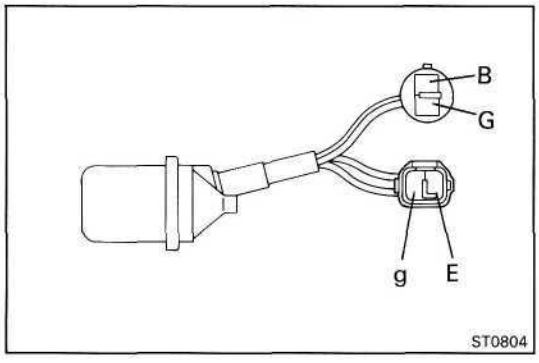

1. INSPECT RELAY CONTINUITY

(a) Using an ohmmeter, check that there is continuity between terminals E and g.

(b) Check that there is no continuity between terminals B and G.

If continuity is not as specified, replace the relay.

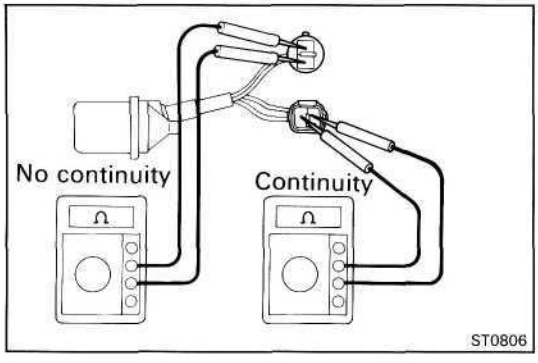

2. INSPECT RELAY OPERATION

(a) Apply battery voltage across terminals E and g.

(b) Using an ohmmeter, check that there is continuity between terminals B and G.

If operation is not as specified, replace the relay.

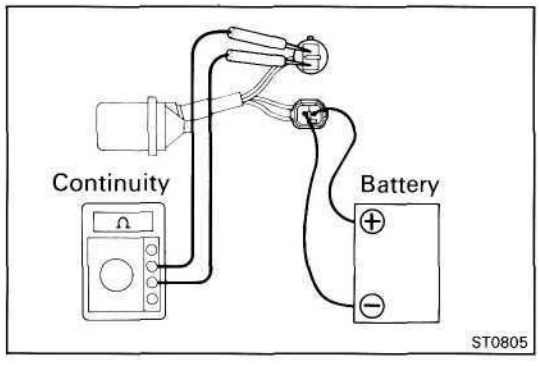

No.2 Glow Plug Relay (HZB and HDB)

LOCATION: Inside wall adjacent to center door.

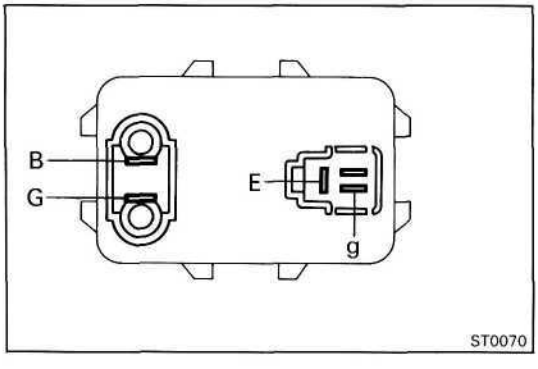

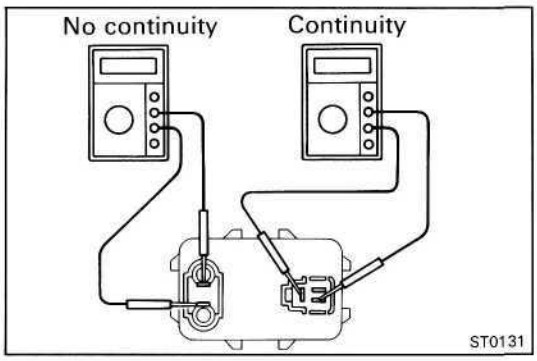

1. INSPECT RELAY CONTINUITY

(a) Using an ohmmeter, check that there is continuity between terminals E and g.

(b) Check that there is no continuity between terminals B and G.

If continuity is not as specified, replace the relay.

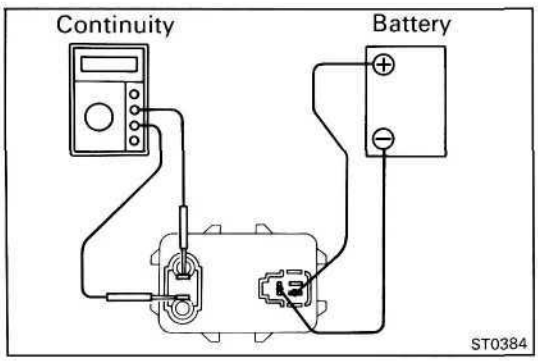

2. INSPECT RELAY OPERATION

(a) Apply battery voltage across terminals E and g.

(b) Using an ohmmeter, check that there is continuity between terminals B and G.

If operation is not as specified, replace the relay.

Glow Plug

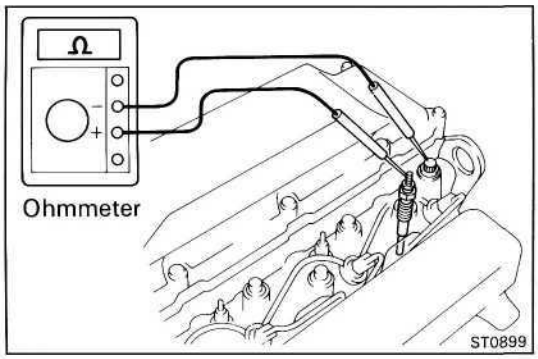

INSPECT GLOW PLUG

Using an ohmmeter, check that there is continuity between the glow plug terminal and ground.

If there is no continuity, replace the glow plug.

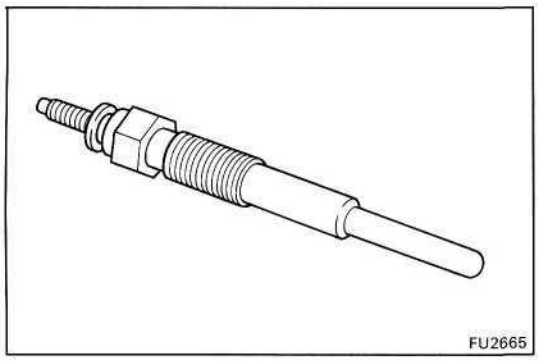

HINT:

- Be careful not to damage the glow plug pipes as it could cause an open circuit or shorten life of the plugs.
- Avoid getting oil and gasoline on the glow plug when cleaning.
- During inspection, be sure to wipe any oil off the glow plug terminal and bakelite washer with a dry cloth.
- Be careful not to apply more than 11 volts (12 V type) or 22 volts (24 v type) to the glow plug as it could cause an open circuit.

Glow Plug Resistor

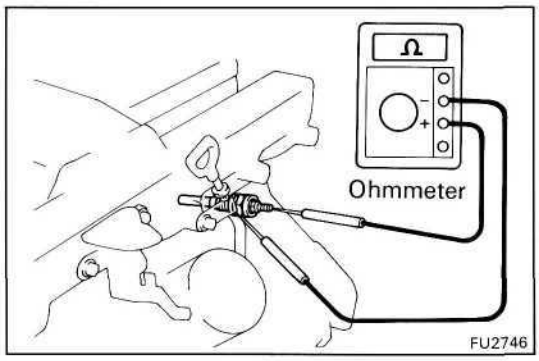

INSPECT GLOW PLUG RESISTOR

Using an ohmmeter, check that there is continuity between the resistor terminals.

If there is no continuity, replace the resistor.

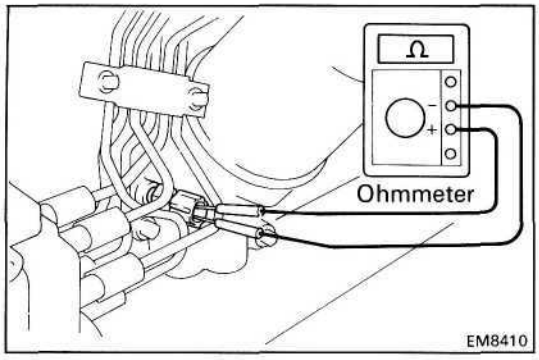

Water Temperature Sensor

INSPECT TEMPERATURE SENSOR

Using an ohmmeter, measure the resistance between the sensor terminals.

Resistance: Refer to chart

If the resistance is not as specified, replace the sensor.

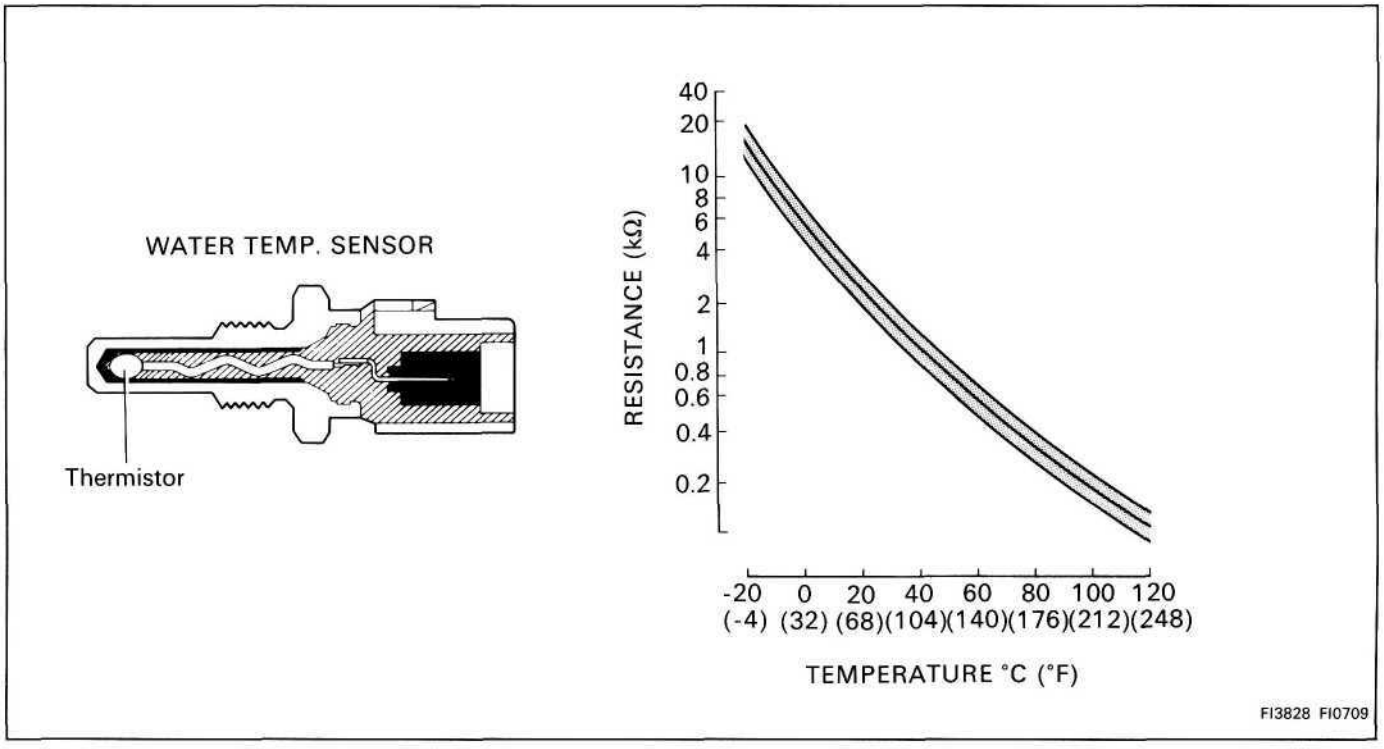

TROUBLESHOOTING

Problem	Possible cause	Remedy	Page
Engine will not crank	Battery charge low	Check battery specific gravity Charge or replace battery	CH-5
	Battery cables loose, corroded or worn	Repair or replace cables	
	Neutral start switch faulty (A/T only)	Replace switch	
	Fusible link blown	Replace fusible link	
	Starter relay faulty	Check relay	ST-25, 26
	Starter faulty	Repair starter	ST-15
	Starter switch faulty	Replace starter switch	
Engine cranks slowly	Battery charge low	Check battery specific gravity Charge or replace battery	CH-5
	Battery cables loose, corroded or worn	Repair or replace cables	
	Starter faulty	Repair starter	ST-15
Starter keeps running	Starter faulty	Repair starter	ST-15
	Starter switch faulty	Repalce starter switch	
	Short in wiring	Repair wiring	
Starter spins but engine will not crank	Pinion gear teach broken or faulty starter	Repair starter	ST-15
	Flywheel teeth broken	Replace flywheel	ST-15

STARTING SYSTEM CIRCUIT

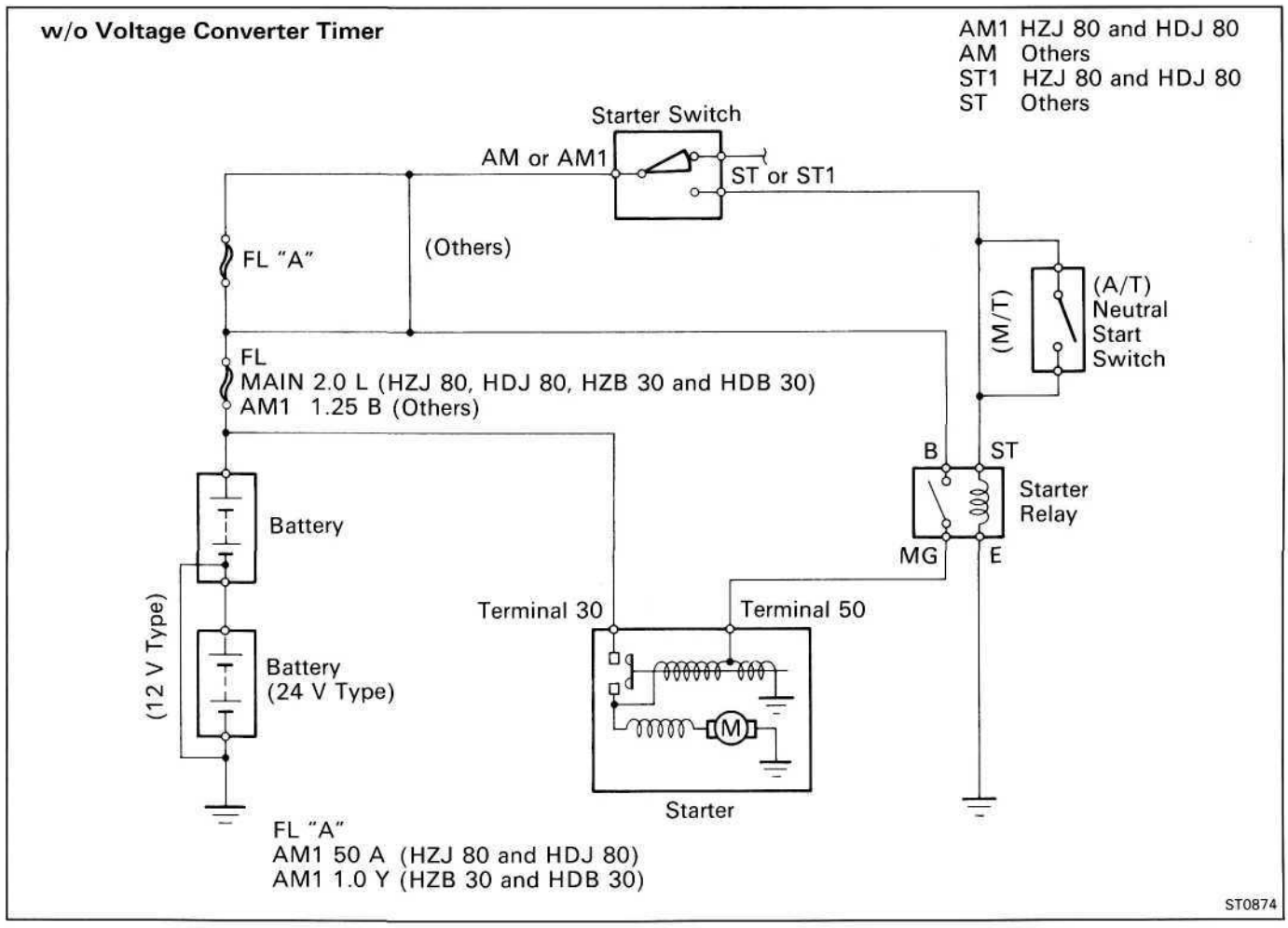

STARTING SYSTEM CIRCUIT (Cont'd)

w/ Voltage Converter Timer

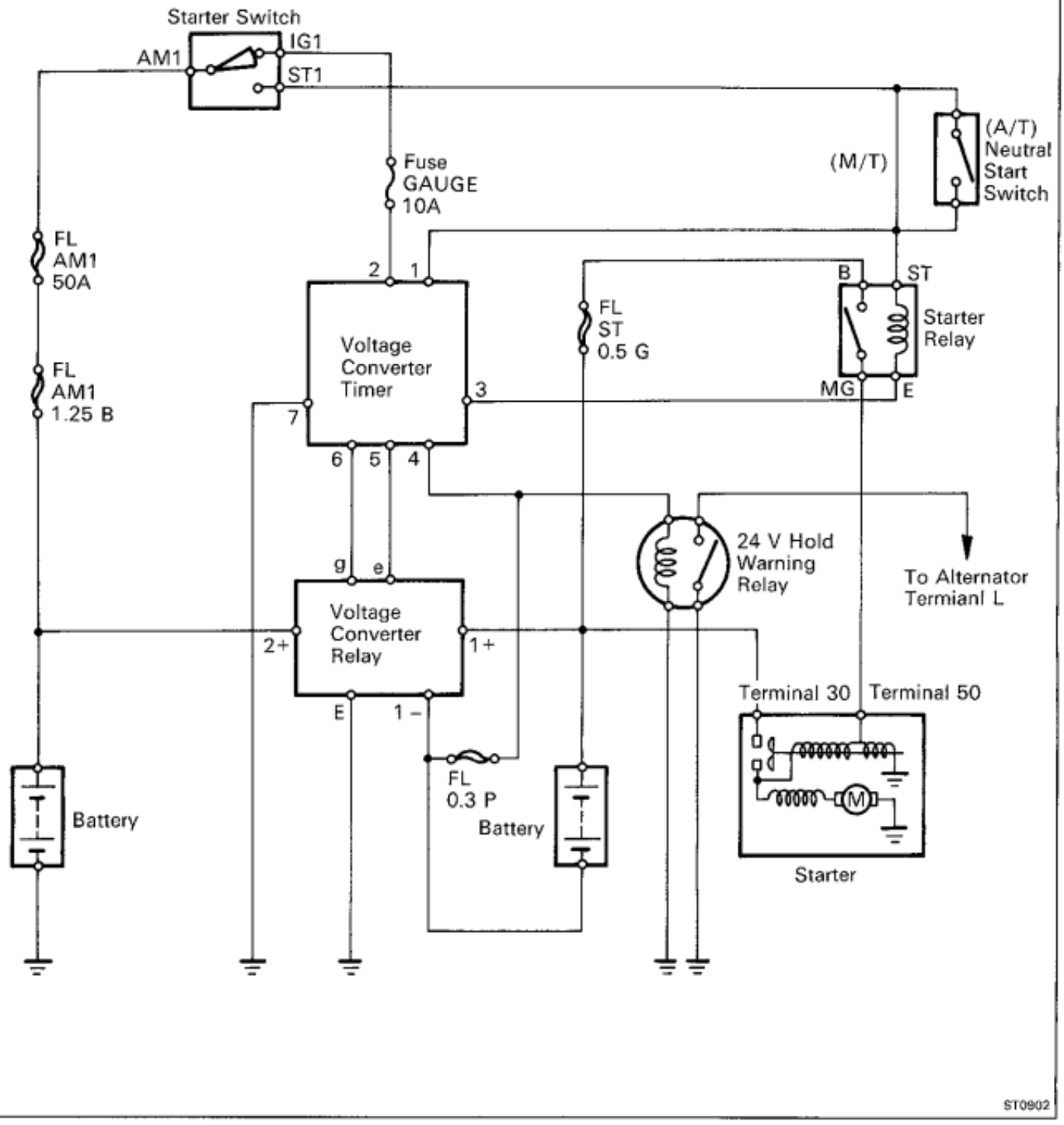

STARTER

COMPONENTS

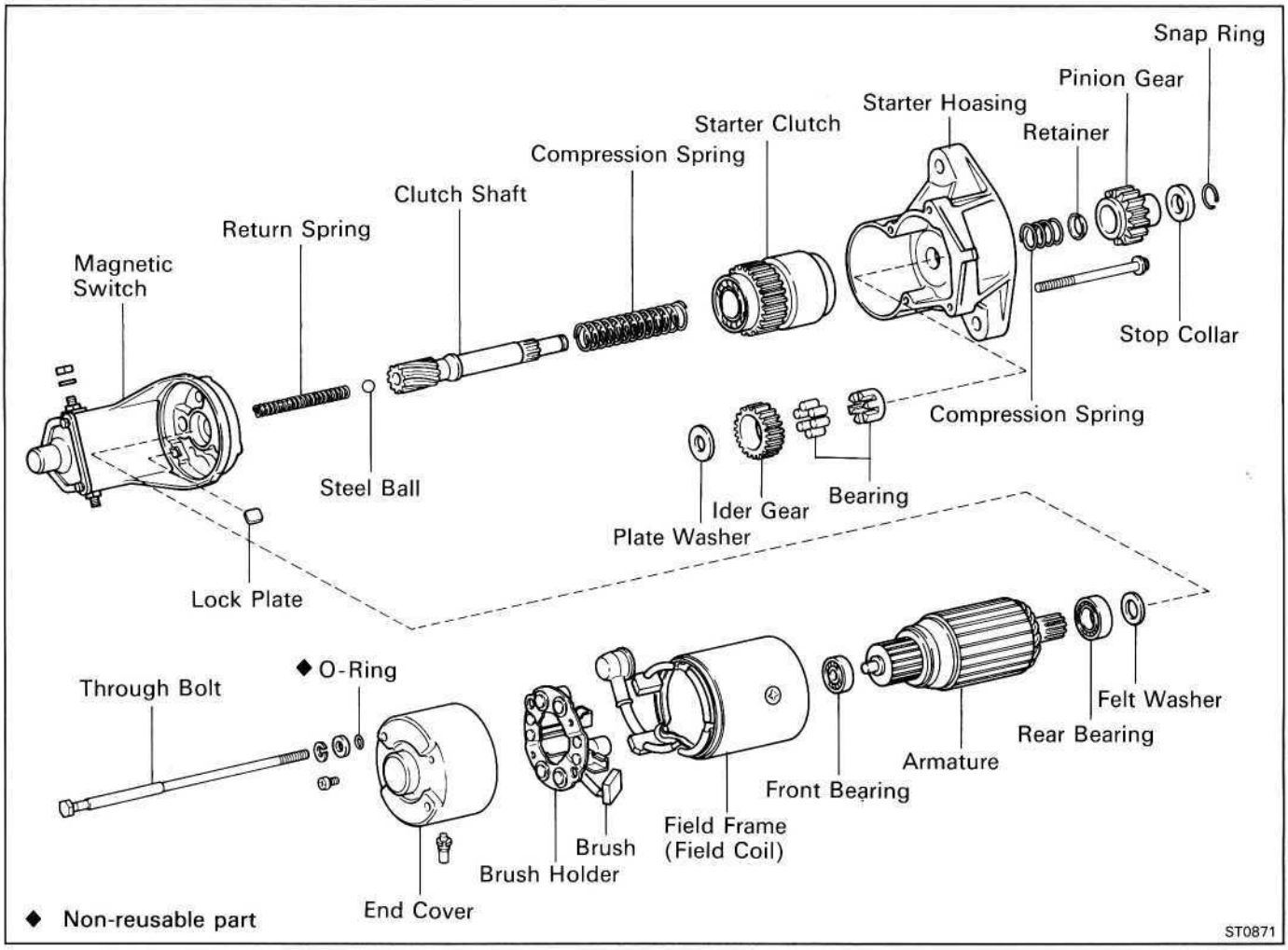

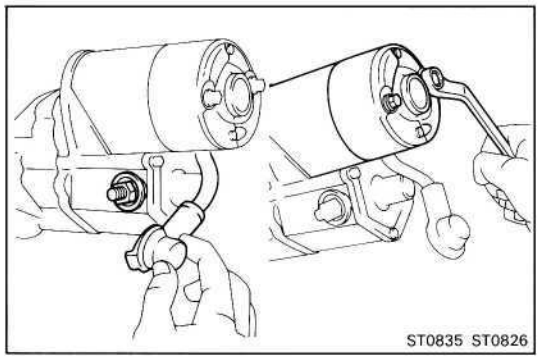

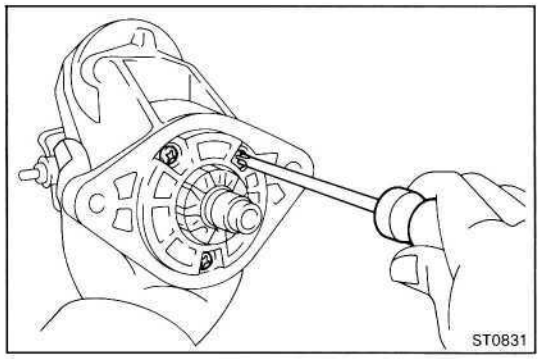

DISASSEMBLY OF STARTER

1. REMOVE FIELD FRAME AND ARMATURE

(a) Remove the nut and spring washer, and disconnect the lead wire from the magnetic switch terminal.

(b) Remove the two through bolts, spring washers, plate washers and O-rings.

(c) Pull out the field frame together with the armature.

(d) Remove the felt washer and lock plate.

2. REMOVE STARTER HOUSING, CLUTCH ASSEMBLY AND GEARS

(a) Remove the three screws.

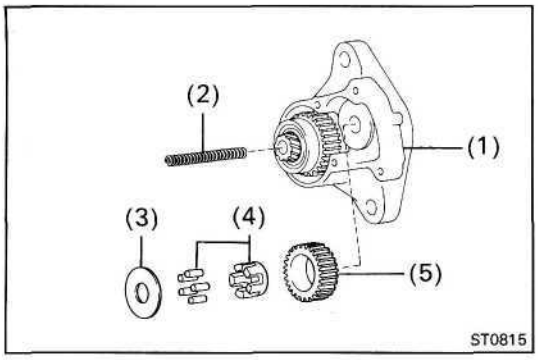

(b) Remove the following parts from the magnetic switch:
(1) Starter housing and clutch assembly
(2) Return spring
(3) Plate washer
(4) Idler gear
(5) Bearing

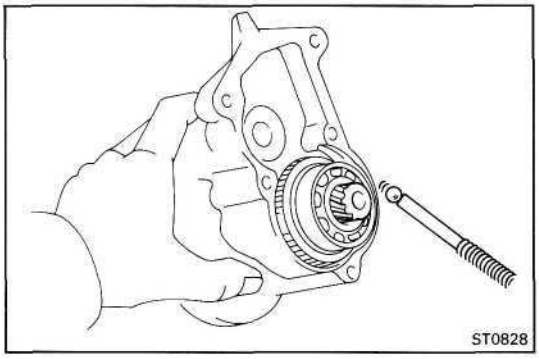

3. REMOVE STEEL BALL

Using a magnetic finger, remove the steel ball from the clutch shaft hole.

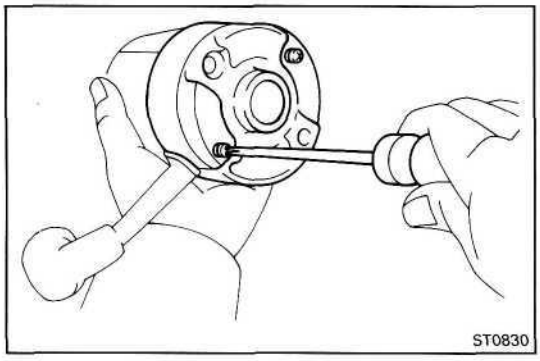

4. REMOVE BRUSH HOLDER

(a) Remove the two screws and end cover from the field frame.

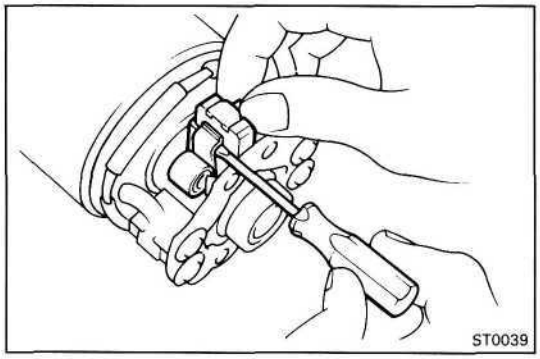

(b) Using a screwdriver, hold the spring back and disconnect the brush from the brush holder. Disconnect the four brushes, and remove the brush holder.

5. REMOVE ARMATURE FROM FIELD FRAME

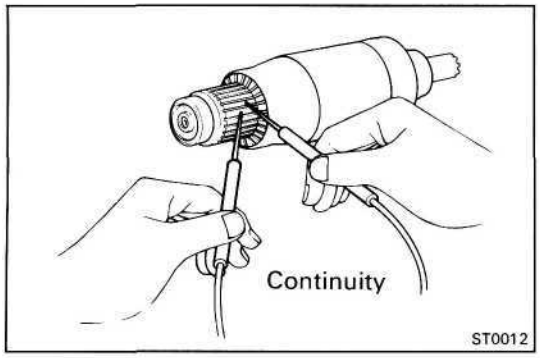

INSPECTION AND REPAIR OF STARTER

Armature Coil

1. INSPECT COMMUTATOR FOR OPEN CIRCUIT

Using an ohmmeter, check that there is continuity between the segments of the commutator.

If there is no continuity, replace the armature.

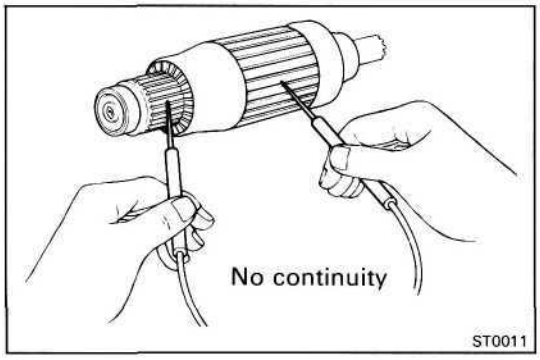

2. INSPECT COMMUTATOR FOR GROUND

Using an ohmmeter, check that there is no continuity between the commutator and armature coil core.

If there is continuity, replace the armature.

Commutator

1. INSPECT COMMUTATOR FOR DIRTY AND BURNT SURFACE

If the surface is dirty or burnt, correct with sandpaper (No.400) or on a lathe.

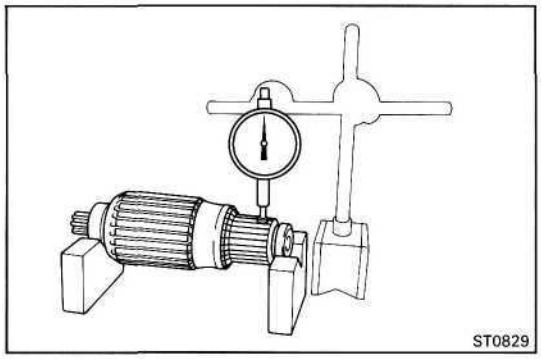

2. INSPECT COMMUTATOR FOR RUNOUT

(a) Place the commutator on V-blocks.

(b) Using a dial indicator, measure the circle runout.

Maximum circle runout: 0.05 mm (0.0020 in.)

If the circle runout is greater than maximum, correct it on a lathe.

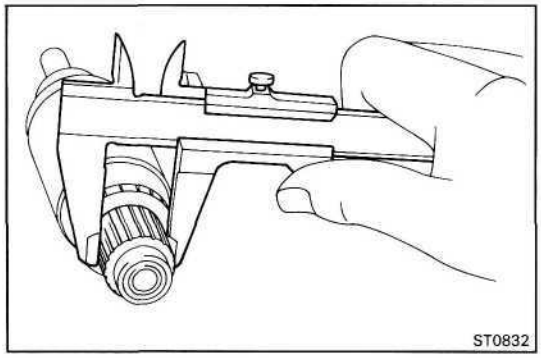

3. INSPECT COMMUTATOR DIAMETER

Using calipers, measure the diameter.

Standard diameter: 36.0 mm (1.417 in.)

Minimum diameter: 35.0 mm (1.378 in.)

If the diameter of the commutator is less than minimum, replace the armature.

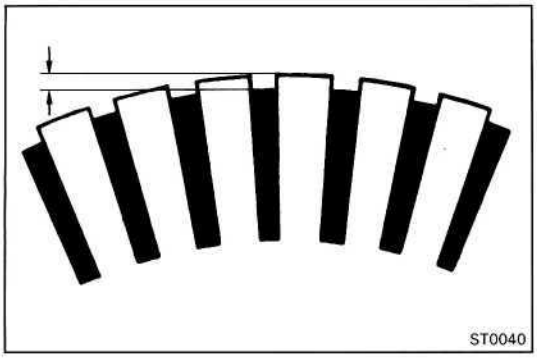

4. INSPECT UNDERCUT DEPTH

Check that the undercut depth is clean and free of foreign material. Smooth out the edge.

Standard undercut depth: 0.7-0.9 mm (0.028-0.035 in.)

Minimum undercut depth: 0.2 mm (0.008 in.)

If the undercut depth is less than minimum, correct it with a hacksaw blade.

Field Coil (Field Frame)

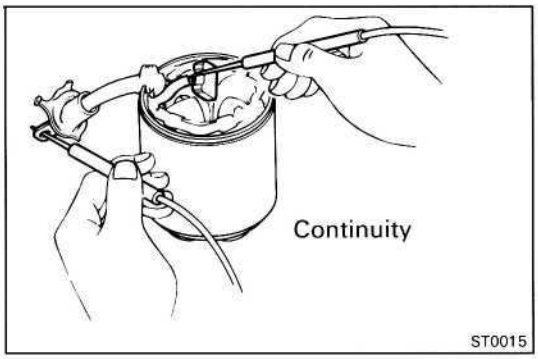

1. INSPECT FIELD COIL FOR OPEN CIRCUIT

Using an ohmmeter, check that there is continuity between the lead wire and field coil brush lead.

If there is no continuity, replace the field frame.

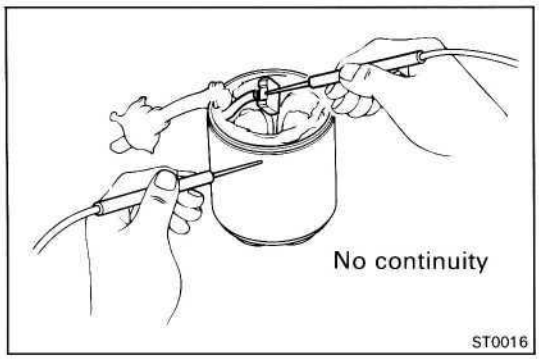

2. INSPECT FIELD COIL FOR GROUND

Using an ohmmeter, check that there is no continuity between the field coil end and field frame.

If there is continuity, replace the field frame.

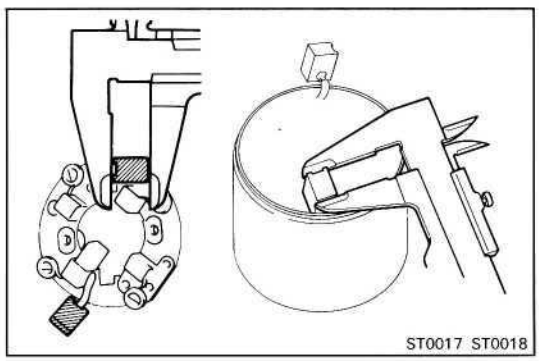

Brushes

INSPECT BRUSH LENGTH

Using calipers, measure the brush length.

Standard length: 20.5-21.0 mm (0.807-0.827 in.)

Minimum length: 13.0 mm (0.512 in.)

If the length is less than minimum, replace the brush holder and field frame.

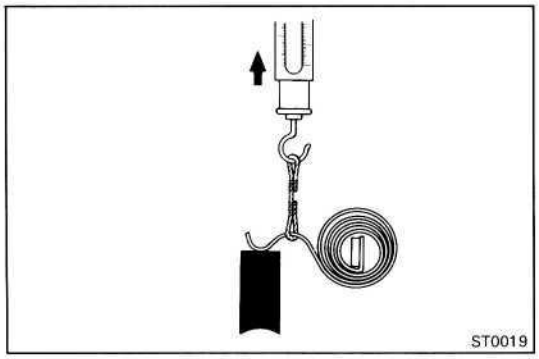

Brush Springs

INSPECT BRUSH SPRING LOAD

Take the pull scale reading the instant the brush spring separates from the brush.

Standard installed load: 3.2-4.0 kg (7.1 -8.8 lb, 31-39 N)

If the installed load is not as specified, replace the brush springs.

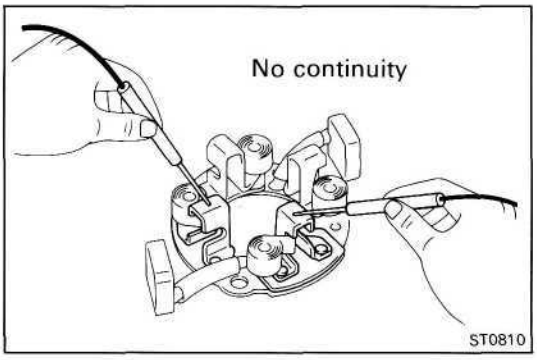

Brush Holder

INSPECT BRUSH HOLDER INSULATION

Using an ohmmeter, check that there is no continuity between the positive (+) and negative (-) brush holders.

If there is continuity, repair or replace the brush holder.

Clutch and Gears

1. INSPECT GEAR TEETH

Check the gear teeth on the pinion gear, idler gear and the clutch assembly for wear or damage.

If damaged, replace the gear or clutch assembly.

If damaged, also check the flywheel ring gear for wear or damage.

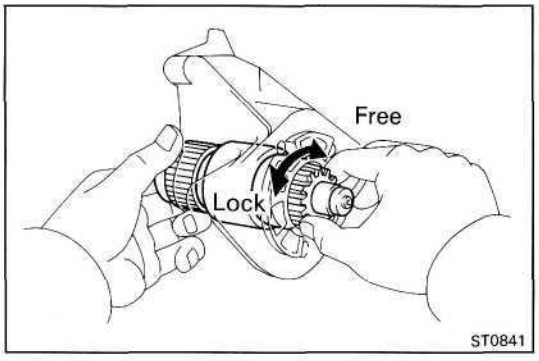

2. INSPECT CLUTCH PINION GEAR

Rotate the pinion gear clockwise and check that it turns freely. Try to rotate the pinion gear counterclockwise and check that it locks.

If necessary, replace the clutch assembly.

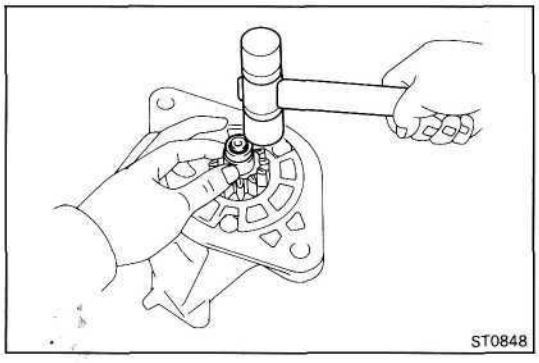

3. IF NECESSARY, REPLACE CLUTCH ASSEMBLY

A. Disassembly starter housing and clutch assembly

(a) Push down the pinion gear and starter housing.

(b) Using a plastic-faced hammer, tap in the stop collar.

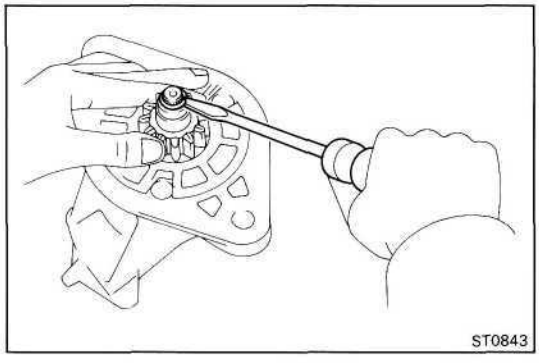

(c) Using a screwdriver, pry out the snap ring.

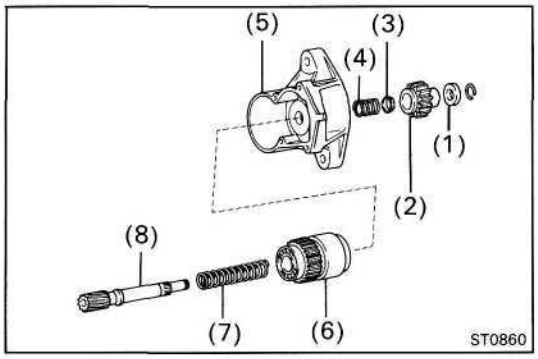

(d) Disassembly the following parts:
(1) Stop collar
(2) Pinion gear
(3) Retainer
(4) Compression spring
(5) Starter housing
(6) Starter clutch
(7) Compression spring
(8) Clutch shaft

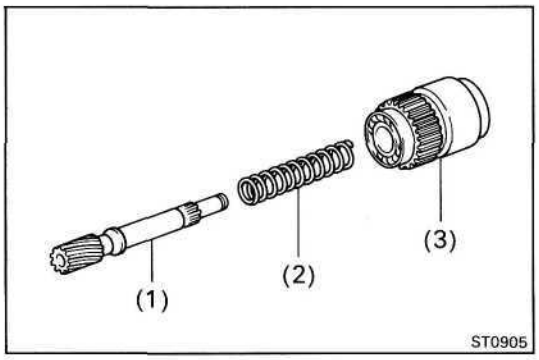

B. Assemble starter housing and clutch assembly

(a) 1st, assemble the following parts:
(1) Clutch shaft
(2) Compression spring
(3) Starter clutch

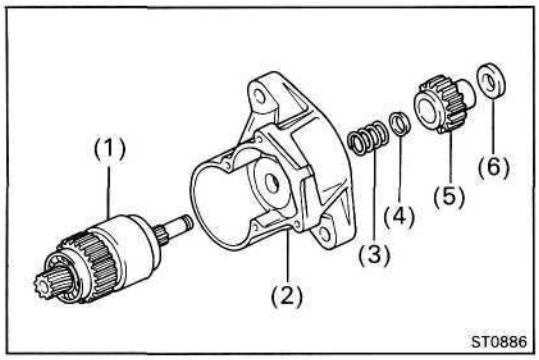

(b) 2nd, assemble the following parts:
(1) Clutch shaft and starter shaft assembly
(2) Starter housing
(3) Compression spring
(4) Retainer
(5) Pinion gear
(6) Stop collar

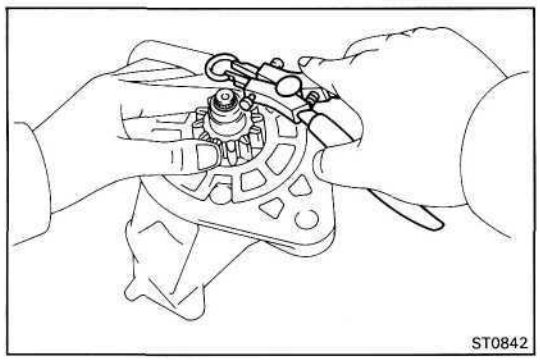

(c) Push down the pinion gear and starter housing.
(d) Using snap ring pliers, install the snap ring.

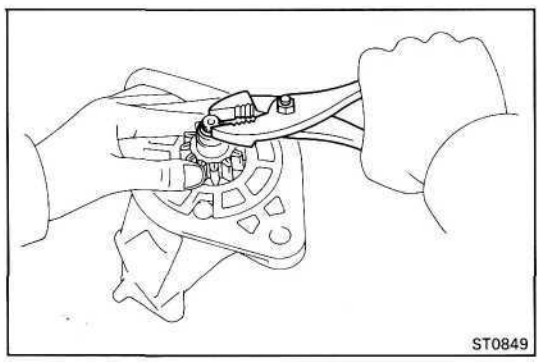

(e) Using pliers, compress the snap ring.
(f) Check that the snap ring fits correctly.

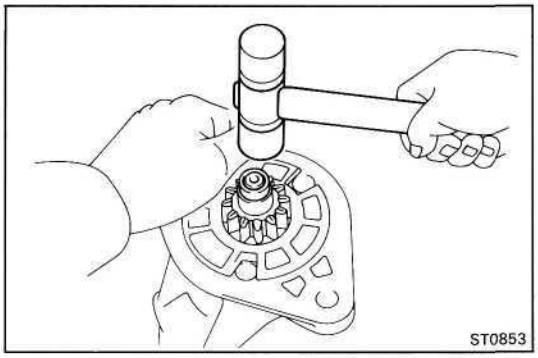

(g) Using a plastic-faced hammer, tap the clutch shaft and install the stop collar onto the snap ring.

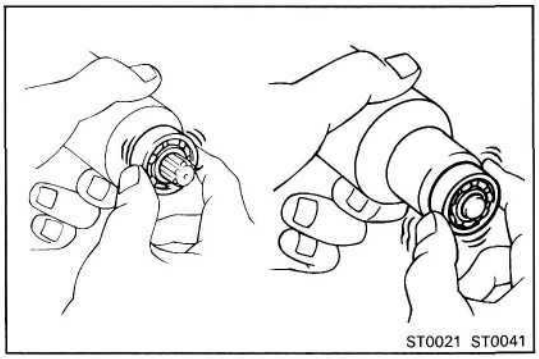

Bearings

1. INSPECT BEARINGS

Turn each bearing by hand while applying inward force.

If resistance is felt or if the bearing sticks, replace the bearing.

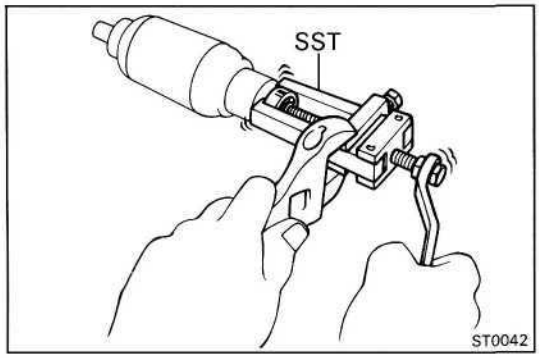

2. IF NECESSARY, REPLACE BEARINGS

A. Remove bearings

Using SST, remove the bearing.

SST 09286-46011

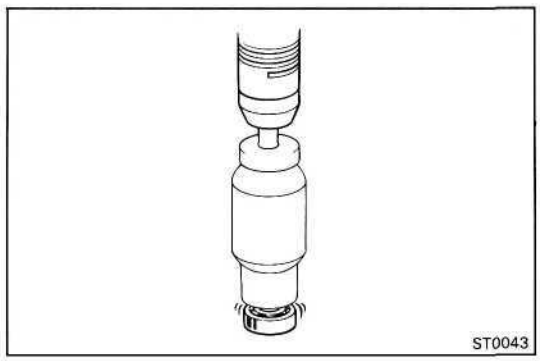

B. Install bearings
(Front)

Using a press, press in a new bearing.

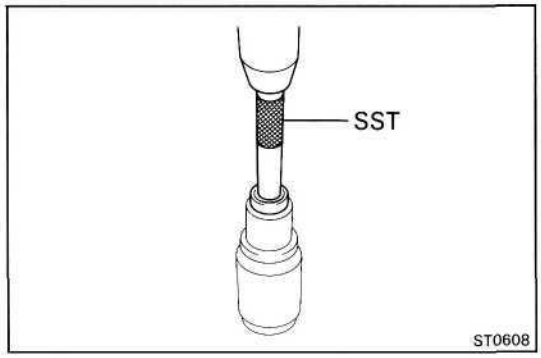

(Rear)

Using SST and a press, press in a new bearing.

SST 09285-76010

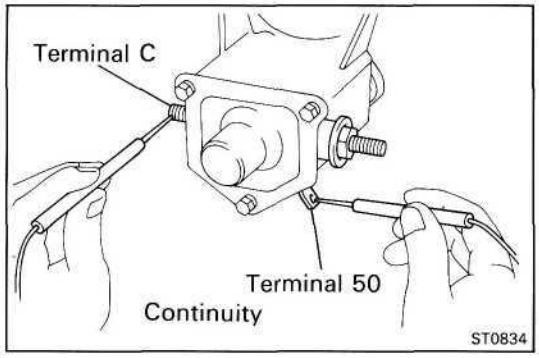

Magnetic Switch

1. PERFORM PULL-IN COIL OPEN CIRCUIT TEST

Using an ohmmeter, check that there is continuity between terminals 50 and C.

If there is no continuity, replace the magnetic switch.

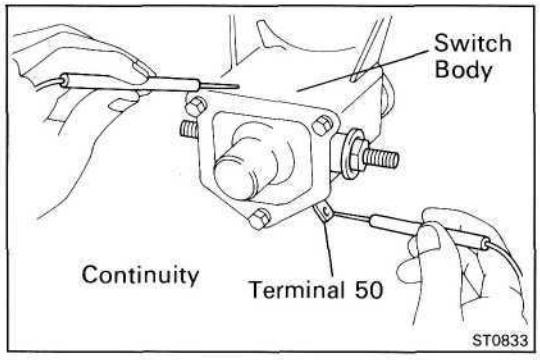

2. PERFORM HOLD-IN COIL OPEN CIRCUIT TEST

Using an ohmmeter, check that there is continuity between terminal 50 and the switch body.

If there is no continuity, replace the magnetic switch.

ASSEMBLY OF STARTER

(See **pageST-15)**

HINT: Use.high-temperature grease to lubricate the bearings and gears when assembling the starter.

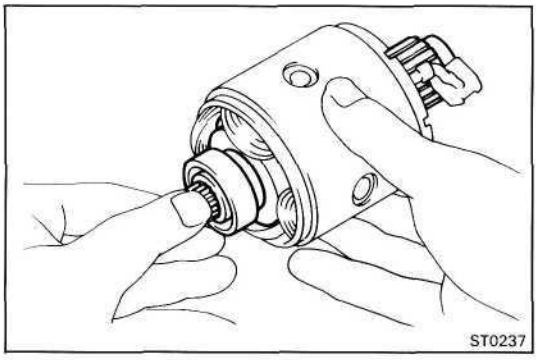

1. PLACE ARMATURE INTO FIELD FRAME

Apply grease to the armature bearings, and insert the armature into the field frame.

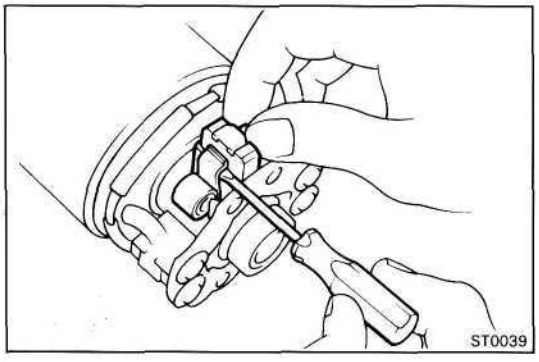

2. INSTALL BRUSH HOLDER

(a) Place the brush holder on the armature.

(b) Using a screwdriver, hold the brush spring back, and connect the brush into the brush holder. Connect the four brushes.

HINT: Check that positive (+) lead wires are not grounded.

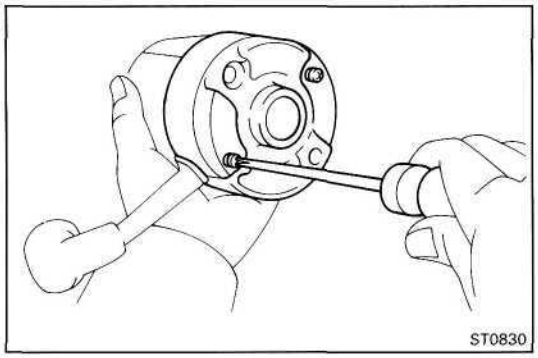

(c) Install the end cover with the two screws.

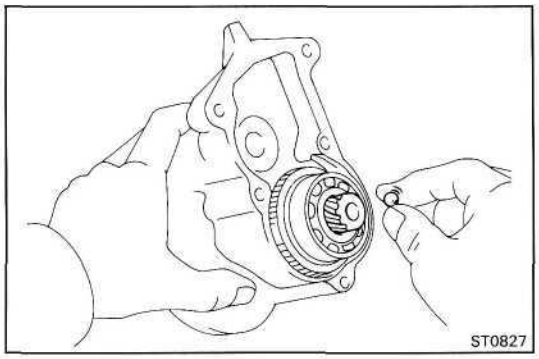

3. INSERT STEEL BALL INTO CLUTCH SHAFT HOLE

(a) Apply grease to the steel ball.

(b) Insert the steel ball into the clutch shaft hole.

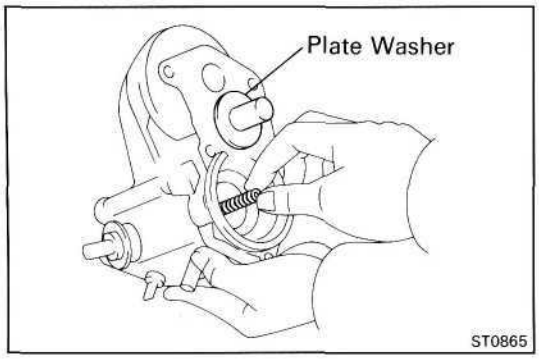

4. INSTALL GEAR, CLUTCH ASSEMBLY AND STARTER HOUSING

(a) Apply grease to the return spring.

(b) Insert the return spring into the magnetic switch hole.

(c) Install the plate washer to the magnetic switch.

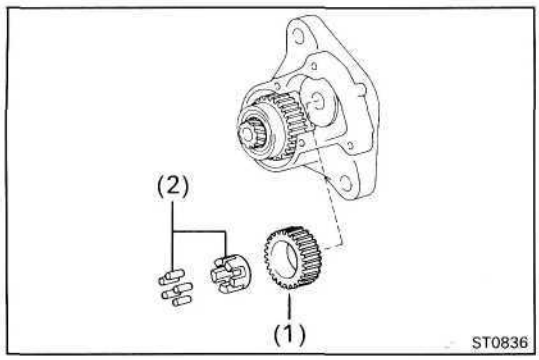

(d) Install the following parts to the starter housing:

(1) Idler gear

(2) Bearing

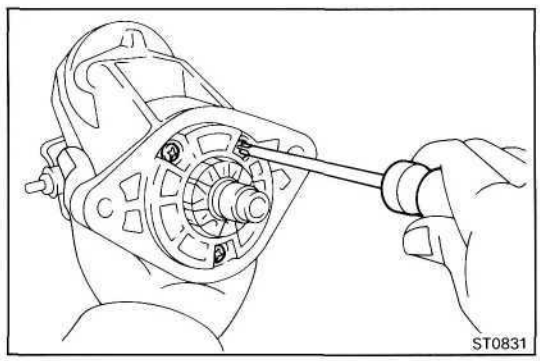

(e) Assemble the starter housing and magnetic switch with the three screws.

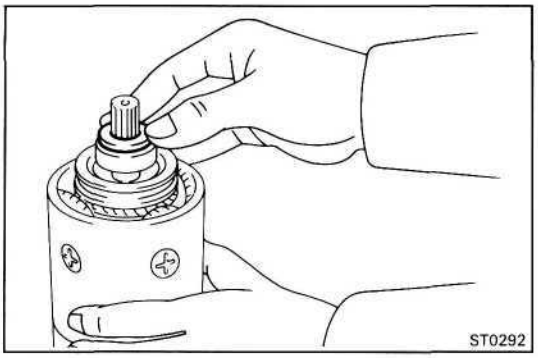

5. INSTALL FIELD FRAME AND ARMATURE ASSEMBLY

(a) Install a new felt washer to the armature.

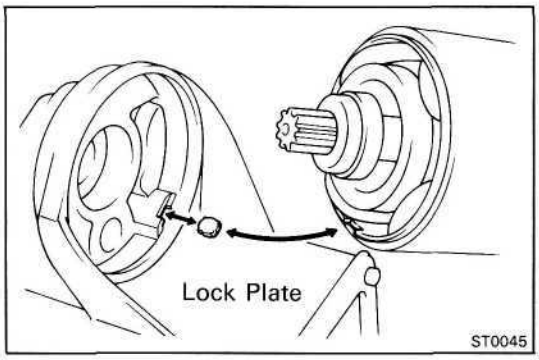

(b) Install the lock plate to the cutout portion of the magnetic switch.

(c) Align the lock plate with the cutout portion of the field frame.

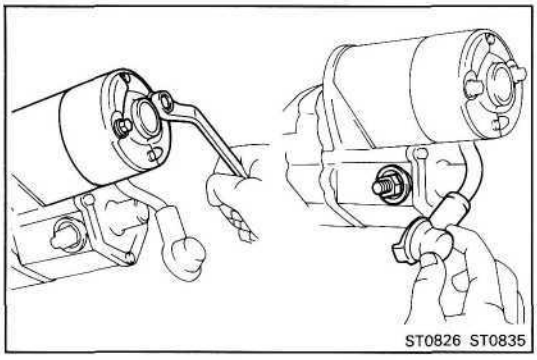

(d) Install the field frame and armature assembly with two new O-rings, the two plate washers, spring washers and two through bolts.

(e) Connect the lead wire to terminal C, and install the spring washer and nut.

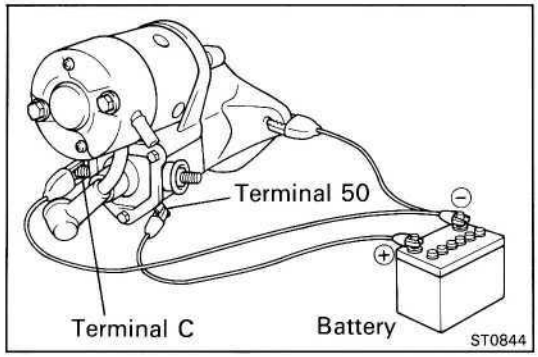

PERFORMANCE TEST OF STARTER

NOTICE: These tests must be performed within 3 to 5 seconds to avoid burning out the coil.

1. PERFORM PULL-IN TEST

(a) Disconnect the field coil lead wire from terminal C.

(b) Connect the battery to the magnetic switch as shown. Check that the clutch pinion gear moves outward.

If the clutch pinion gear does not move, replace the magnetic switch assembly.

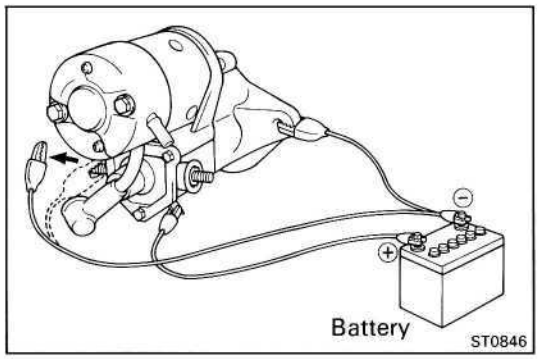

2. PERFORM HOLD-IN TEST

While connected as above with the clutch pinion gear out, disconnect the negative (-) lead from terminal C. Check that the pinion gear remains out.

If the clutch pinion gear returns inward, replace the magnetic switch assembly.

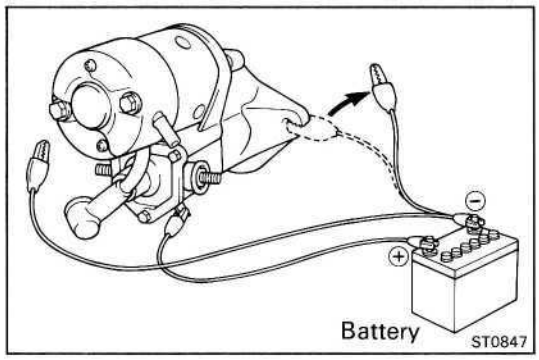

3. INSPECT CLUTCH PINION GEAR RETURN

Disconnect the negative (-) lead from the switch body. Check that the clutch pinion gear returns inward.

If the clutch pinion gear does not return, replace the magnetic switch assembly.

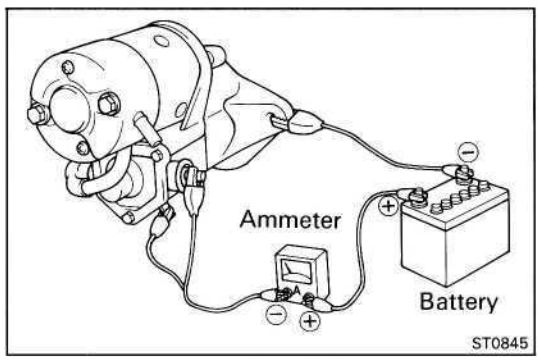

4. PERFORM NO-LOAD PERFORMANCE TEST

(a) Connect the battery and ammeter to the starter as shown.

(b) Check that the starter rotates smoothly and steadily with the pinion gear moving out. Check that the ammeter shows the specified current.

Specified current:

12 V type 180 A or less at 11 V
24 V type 90 A or less at 23 V

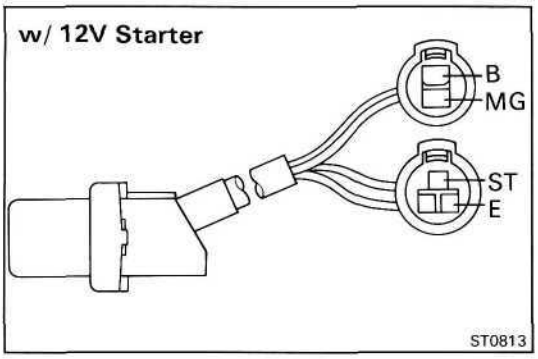

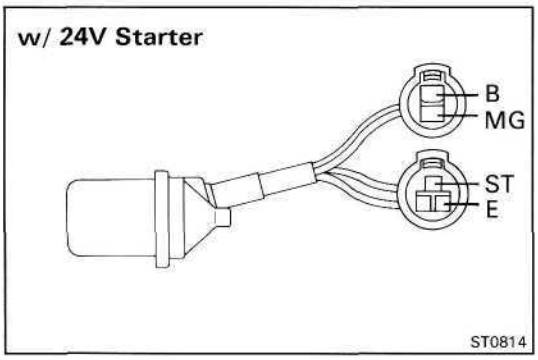

STARTER RELAY (PZJ, HZJ and HDJ)

LOCATION: In the engine compartment on the left side.

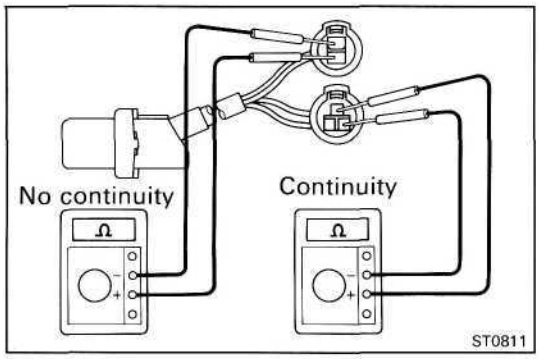

INSPECTION OF STARTER RELAY

1. INSPECT RELAY CONTINUITY

(a) Using an ohmmeter, check that there is continuity between terminals E and ST.

(b) Check that there is no continuity between terminals B and MG.

If continuity is not as specified, replace the relay.

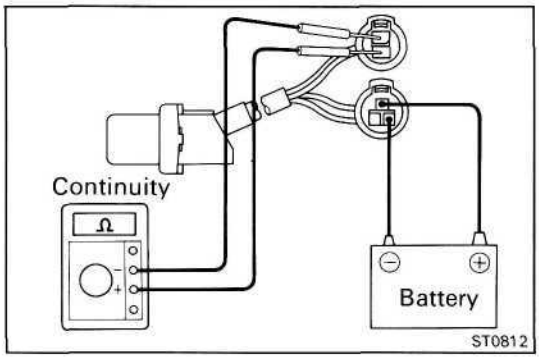

2. INSPECT RELAY OPERATION

(a) Apply battery voltage across terminals E and ST.

NOTICE: If the vehicle has a voltage coverter, **perform the check using a 12 V battery.**

(b) Using an ohmmeter, check that there is continuity between terminals B and MG.

If operation is not as specified, replace the relay.

CHARGING SYSTEM

Page
PRECAUTIONS.....CH-2
TROUBLESHOOTING.....CH-2
CHARGING SYSTEM CIRCUIT.....CH-3
ON-VEHICLE INSPECTION.....CH-5
ALTERNATOR.....CH-8

PRECAUTIONS

1. Check that the battery cables are connected to the correct terminals.
2. Disconnect the battery cables when the battery is given a quick charge.
3. Do not perform tests with a high voltage insulation resistance tester.
4. Never disconnect the battery while the engine is running.

TROUBLESHOOTING

Problem	Possible cause	Remedy	Page
Discharge warning light does not light with starter switch at "ON" and engine not running	Fuse blown	Check fuses	
	Light burned out	Replace light	
	Wiring connection loose	Tighten loose connection	
	IC regulator faulty	Replace IC regulator	CH-8
Discharge warning light does not go out with engine running (battery requires frequent recharging)	Drive belt loose or worn	Adjust or replace drive belt	CH-5
	Battery cables loose, corroded or worn	Repair or replce cables	
	Fuse blown	Check fuse	
	Fusible link blown	Replace fusible link	
	IC regulator or alternator faulty	Check charging system	CH-5
	Wiring faulty	Repair wiring	

CHARGING SYSTEM CIRCUIT

PZJ70,73,75**and HZJ**70,73,75

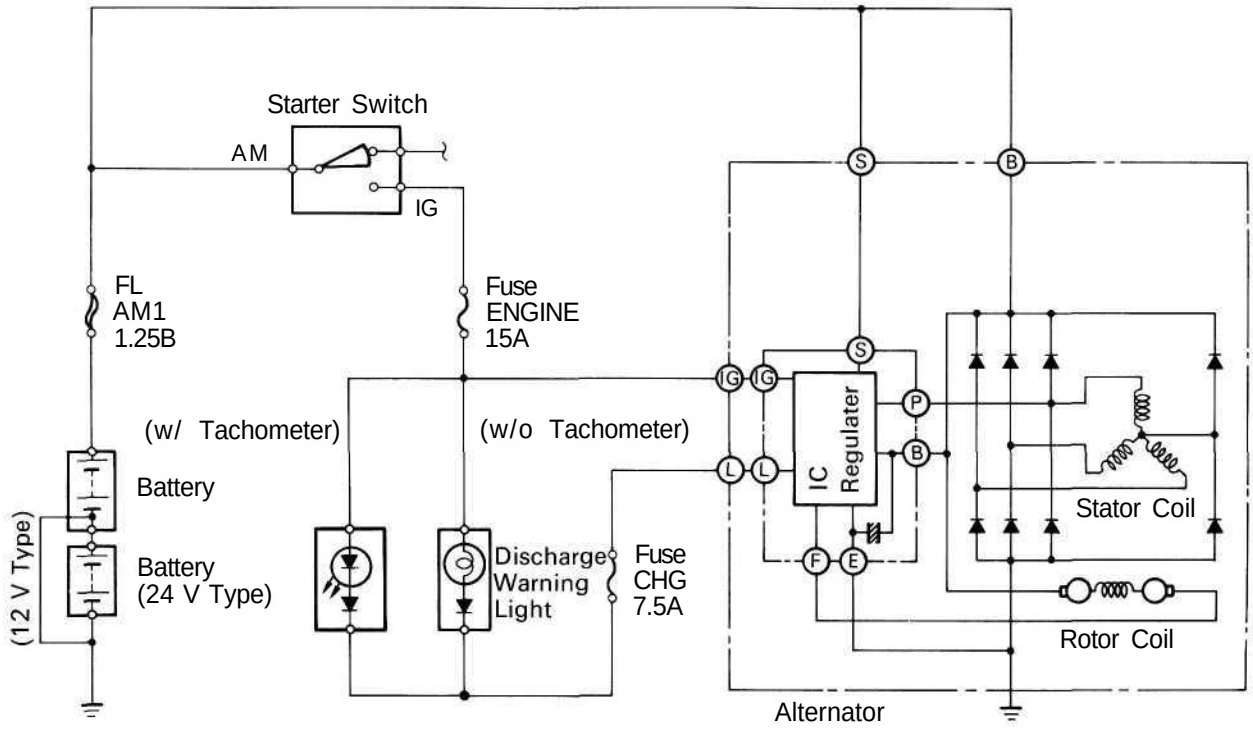

HZJ80**and HDJ**80

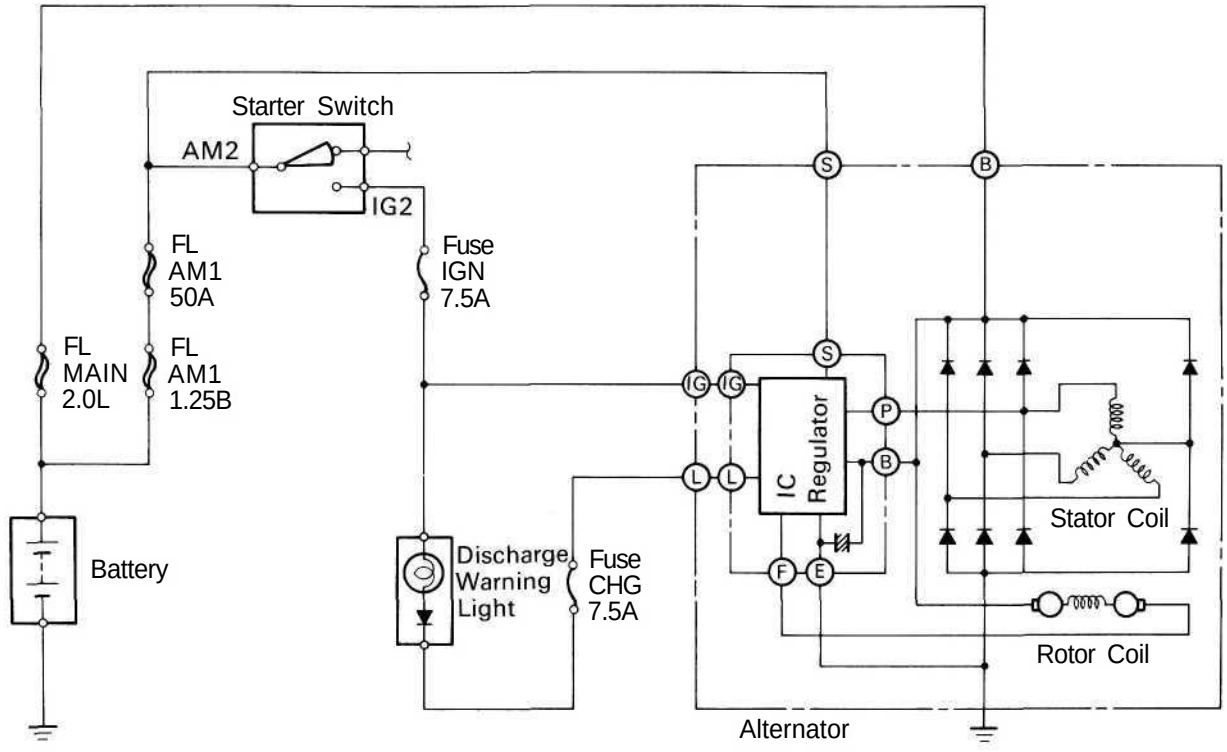

ST0884
ST0883

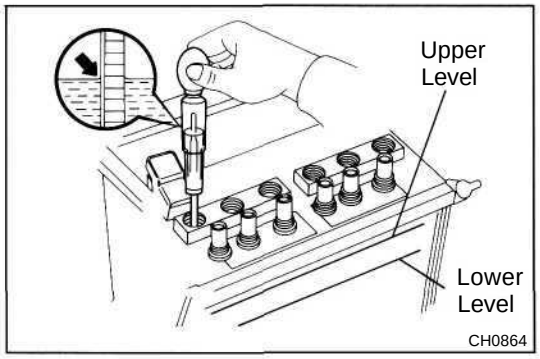

ON-VEHICLE INSPECTION

1. INSPECT BATTERY SPECIFIC GRAVITY AND ELECTROLYTE LEVEL

(a) Check the specific gravity of each cell.

Standard specific gravity:
When fully charged at 20°C (68°F)
1.25-1.27 (ex. (95D31 R and 95D31L))
1.27 -1.29 (95D31R and 95D31L)

If not as specified, charge the battery.

(b) Check the electrolyte quantity of each cell.

If insufficient, refill with distilled (or purified) water.

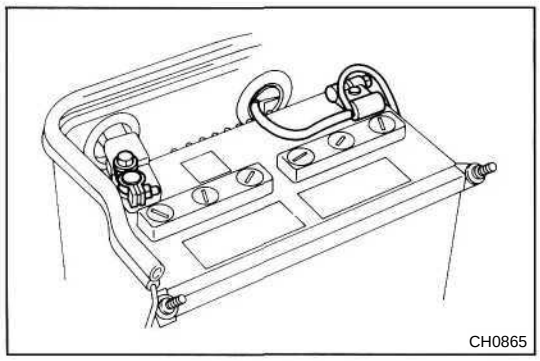

2. CHECK BATTERY TERMINALS, FUSIBLE LINKS AND FUSES

(a) Check that the battery terminals are not loose or corroded.

(b) Check the fusible links and fuses for continuity.

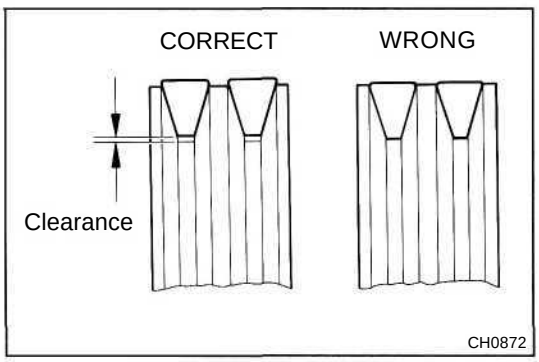

3. INSPECT DRIVE BELTS

(a) Visually check each belt for cracks, oiliness or wear. Check that the belt does not touch the bottom of the pulley groove.

If one belt has any of the above defects, replace both belts.

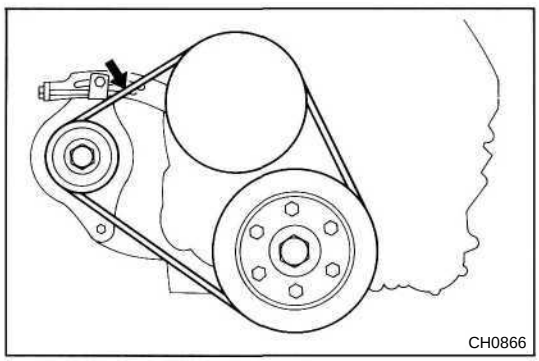

(b) Check the drive belt deflection by pressing on the belt at the points indicated in the illustration with 10 kg (22.0 lb, 98 N) of pressure.

Drive belt deflection:
New belt 6-7 mm (0.24-0.28 in.)
Used belt 8-11 mm (0.31 -0.43 in.)

If the deflection is not as specified, adjust it.

HINT:

- "New belt" refers to a belt which has been used 5 minutes or less on a running engine.
- "Used belt" refers to a belt which has been used on a running engine for 5 minutes or more.
- After installing a new belt, run the engine for about 5 minutes and recheck the deflection.

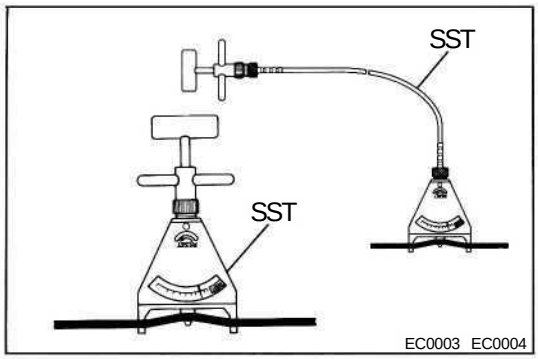

(c) (Reference)
Using SST, measure the drive belt tension.

SST 09216-00020 and 09216-00030

Drive belt tension: New belt 45-55 kg
Used belt 20-35 kg

If the belt tension is not as specified, adjust it.

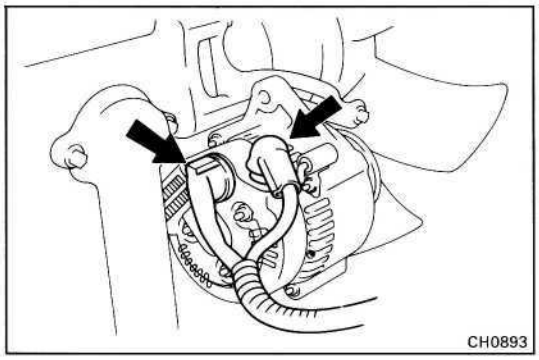

4. VISUALLY CHECK ALTERNATOR WIRING AND LISTEN FOR ABNORMAL NOISES

(a) Check that the wiring is in good condition.

(b) Check that there is no abnormal noise from the alternator while the engine is running.

5. INSPECT DISCHARGE WARNING LIGHT CIRCUIT

(a) Warm up the engine and then turn it off.

(b) Turn off all accessories.

(c) Turn the starter switch to "ON". Check that the discharge warning light is lit.

(d) Start the engine. Check that the light goes out.

If the light does not operate as specified, troubleshoot the discharge light circuit.

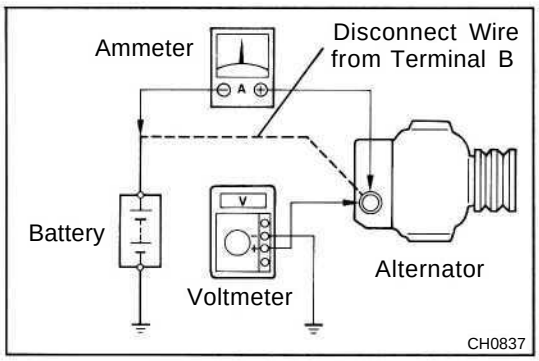

6. INSPECT CHARGING CIRCUIT WITHOUT LOAD

HINT: If a battery/alternator tester is available, connect the tester to the charging circuit as per manufacturer's instructions.

(a) If a tester is not available, connect a voltmeter and ammeter to the charging circuit as follows:

- Disconnect the wire from terminal B of the alternator and connect it to the negative (-) lead of the ammeter.
- Connect the positive (+) lead of the ammeter to terminal B of the alternator.
- Connect the positive (+) lead of the voltmeter to terminal B of the alternator.
- Ground the negative (-) lead of the voltmeter.

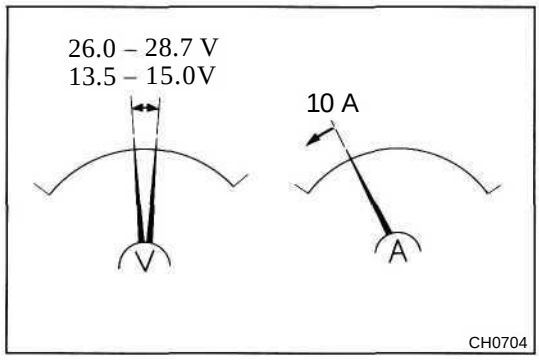

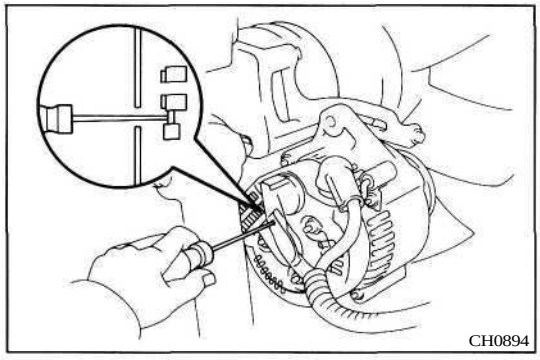

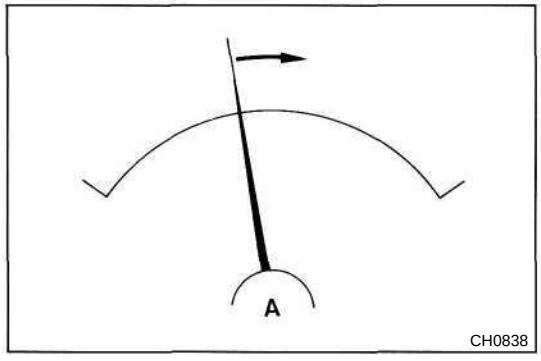

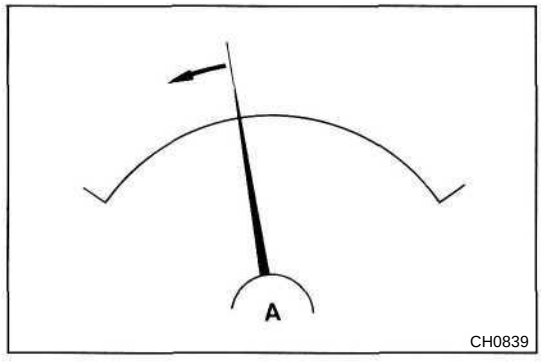

(b) Check the charging circuit as follows:
With the engine running from idling to 2,000 rpm, check the reading on the ammeter and voltmeter.

Standard amperage: 10 A or less

Standard voltage:

12 V type	**14.0-15.0 V at 25°C (77°F)**
	13.5-14.3 V at 135°C (275° F)
24 V type	**27.7-28.7 V at 25°C (77°F)**
	26.0-28.7 V at 135°C (275°F)

If the voltmeter reading is more than standard voltage, replace the IC regulator.

If the voltmeter reading is less than standard voltage, check the IC regulator and alternator as follows:

- With terminal F grounded, start the engine and check the voltmeter reading of terminalB.
- If the voltmeter reading is greater than standard , voltage, replace the IC regulator.
- If the voltmeter reading is less than standard voltage, check the alternator.

7. INSPECT CHARGING CIRCUIT WITH LOAD

(a) With the engine running at 2,000 rpm, turn on the high beam headlights and place the heater blower switch at "HI".

(b) Check the reading on the ammeter.

Standard amperage:

12 V 45, 55, 60, 80 A type	**30 A or more**
12 V 100 A type	**40 A or more**
24 V 30 A type	**15 A or more**
24 V 55 A type	**30 A or more**

If the ammeter reading is less than standard amperage, repair the alternator. (See page CH-8)

HINT: With the battery fully charged, the indication will sometimes be less than standard amperage.

ALTERNATOR

COMPONENTS

Type A

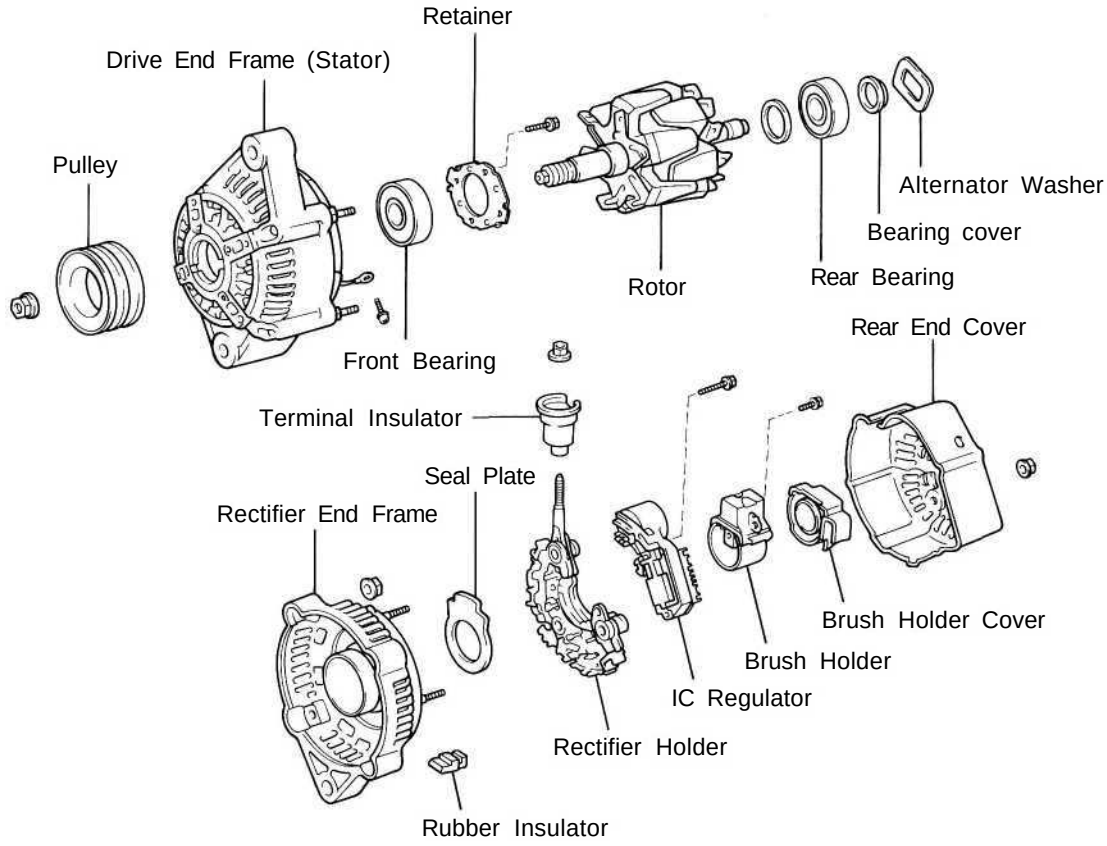

Type B

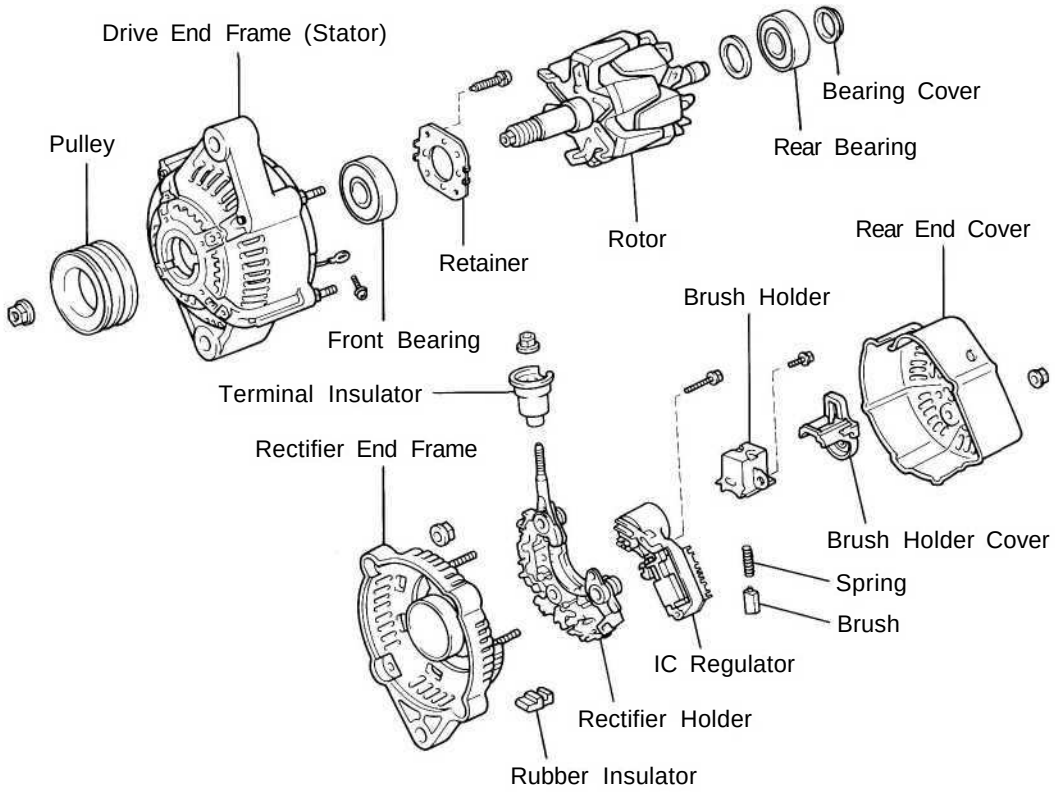

CH0857
CH0858

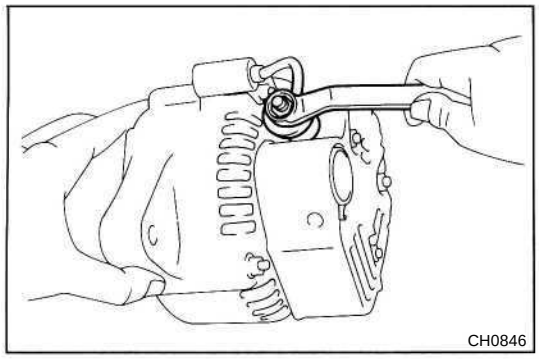

DISASSEMBLY OF ALTERNATOR

(See page CH-8)

1. REMOVE REAR END COVER

(a) (PZJ, HZJ and HDJ)
Remove the nut, condenser lead wire and terminal insulator.

(b) (HZB and HDB)
Remove the nut and terminal insulator.

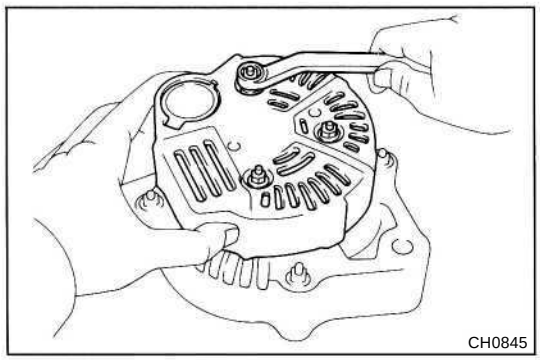

(c) Remove the three nuts and end cover.

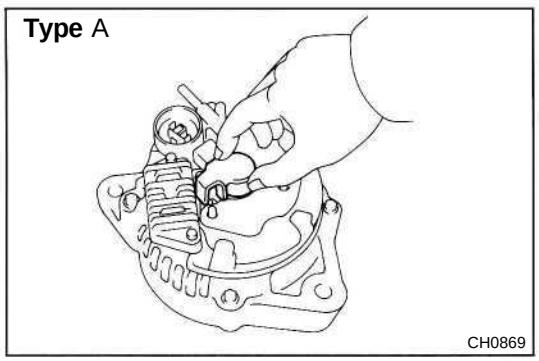

2. REMOVE BRUSH HOLDER AND IC REGULATOR

(a) (Type A)
Remove the brush holder cover from the brush holder.

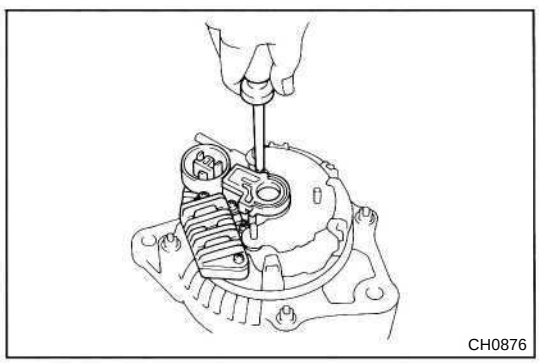

(b) Remove the five screws, brush holder, holder cover and IC regulator.

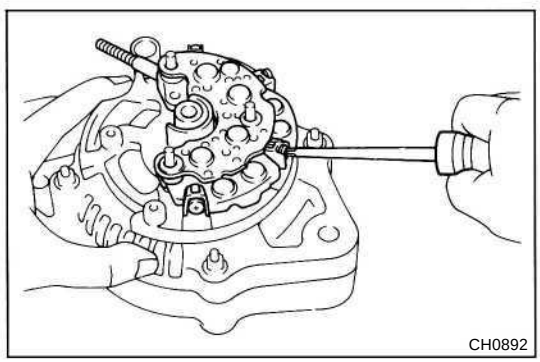

3. REMOVE RECTIFIER HOLDER

(a) Remove the four screws and rectifier holder.

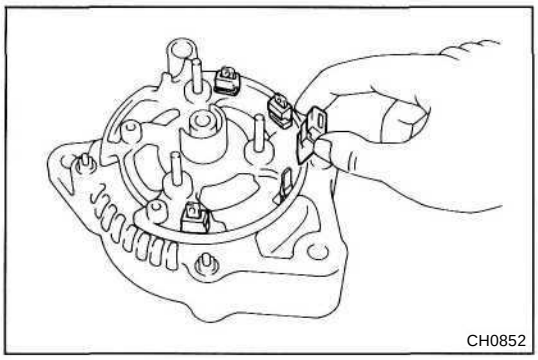

(b) Remove the four rubber insulator.

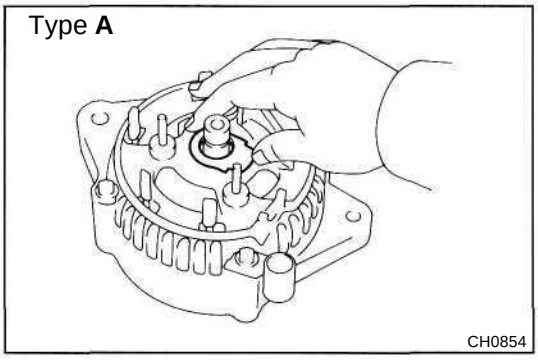

(c) (Type A)
Remove the seal plate.

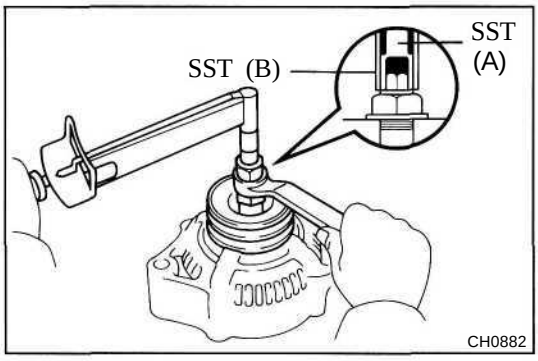

4. REMOVE PULLEY

(a) Hold SST (A) with a torque wrench, and tighten SST (B) clockwise to the specified torque.

SST 09820-63010

Torque: 400 kg-cm (29 ft-lb, 39 N-m)

(b) Check that SST (A) is secured to the rotor shaft.

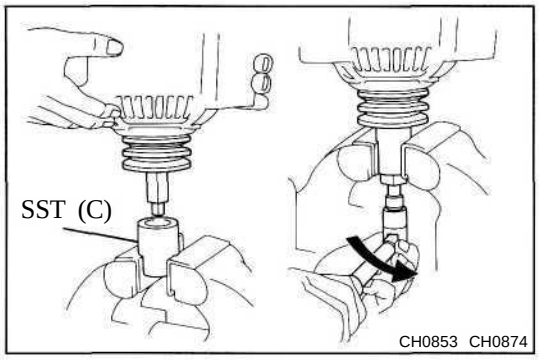

(c) As shown in the illustration, mount SST (C) in a vise, and install the alternator to SST (C).

(d) To loosen the pulley nut, turn SST (A) in the direction shown in the illustration.

NOTICE: To prevent damage to the rotor shaft, do not loosen the pulley nut more that one-half of a turn.

(e) Remove the alternator from SST (C).

(f) Turn SST (B) and remove SST (A and B).

(g) Remove the pulley nut and pulley.

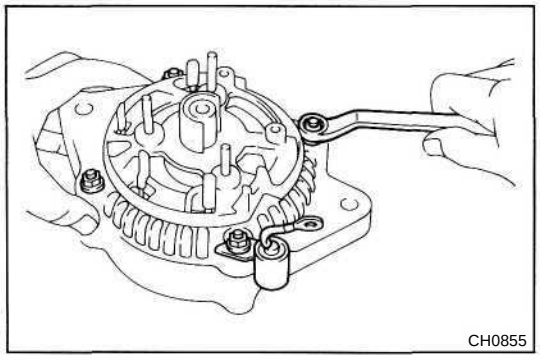

5. REMOVE RECTIFIER END FRAME

(a) (PZJ, HZJ and HDJ)
Remove the four nuts and condenser.

(b) (HZBandHDB)
Remove the four nuts.

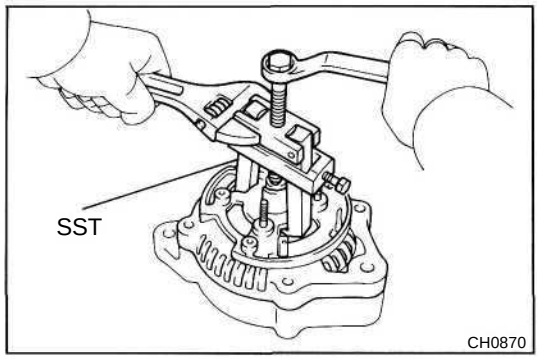

(c) Using SST, remove the rectifier end frame.
SST 09286-46011

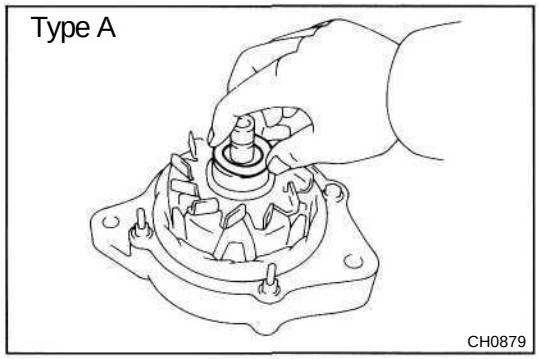

(d) (Type A)
Remove the alternator washer.

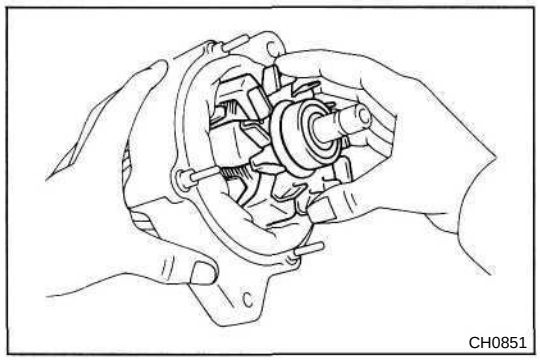

6. REMOVE ROTOR FROM DRIVE END FRAME

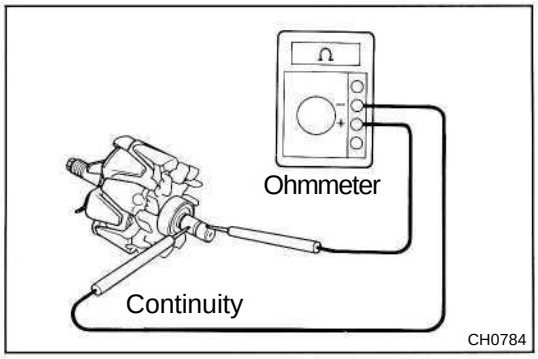

INSPECTION AND REPAIR OF ALTERNATOR

Rotor

1. INSPECT ROTOR FOR OPEN CIRCUIT

Using an ohmmeter, check that there is continuity between the slip rings.

Standard resistance (cold): 12VType 2.7-3.1 Q
24 V Type 1.0-1.4Q

If there is no continuity, replace the rotor.

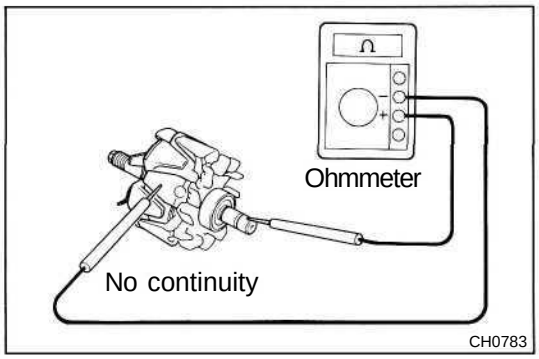

2. INSPECT ROTOR FOR GROUND

Using an ohmmeter, check that there is no continuity between the slip ring and the rotor.

If there is continuity, replace the rotor.

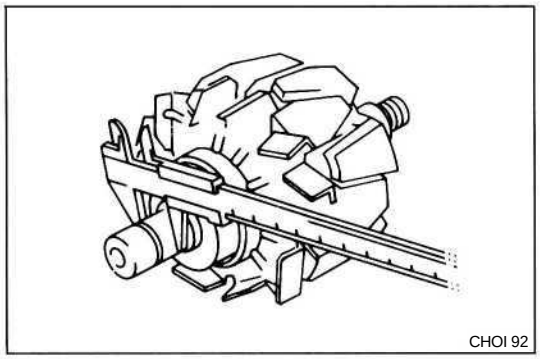

3. INSPECT SLIP RINGS

(a) Check that the slip rings are not rough or scored.

If rough or scored, replace the rotor.

(b) Using vernier calipers, measure the slip ring diameters.

Standard diameter: 14.2-14.4 mm
(0.559-0.567 in.)

Minimum diameter: 12.8 mm (0.504 in.)

If the diameter is less than minimum, replace the rotor.

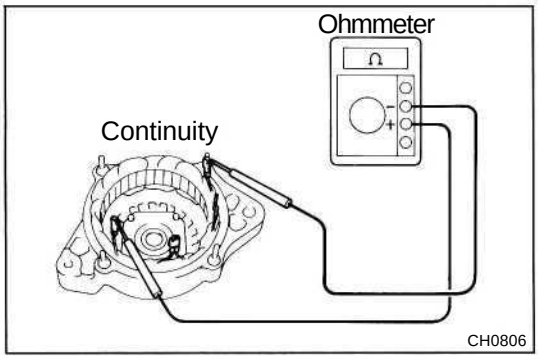

Stator (Drive End Frame)

1. INSPECT STATOR FOR OPEN CIRCUIT

Using an ohmmeter, check that there is continuity between the coil leads.

If there is no continuity, replace the drive end frame assembly.

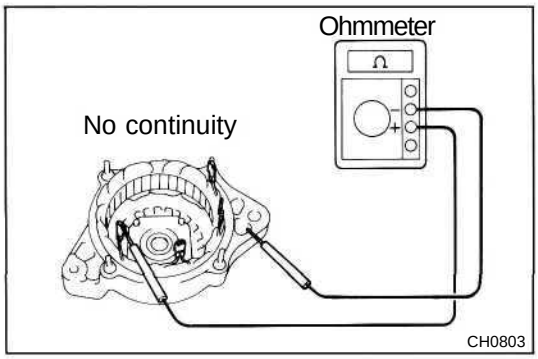

2. INSPECT STATOR FOR GROUND

Using an ohmmeter, check that there is no continuity between the coil leads and drive end frame.

If there is continuity, replace the drive end frame assembly.

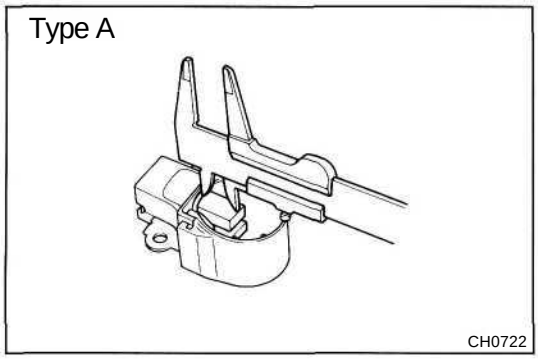

Brushes

1. INSPECT EXPOSED BRUSH LENGTH

Using vernier calipers or scale, measure the exposed brush length.

Standard exposed **length: 10.5** mm **(0.413** in.)

Minimum exposed length: 1.5 mm **(0.059** in.)

If the exposed length is less than minimum, replace the brushes and brush holder assembly (Type A) or brushes (Type B).

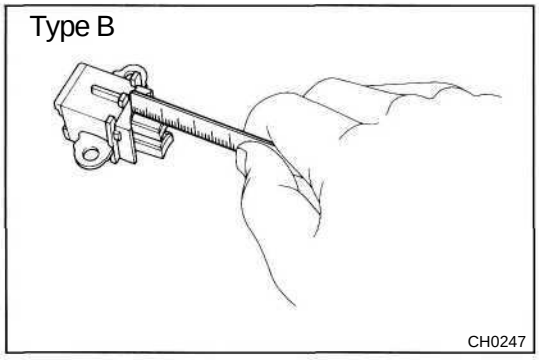

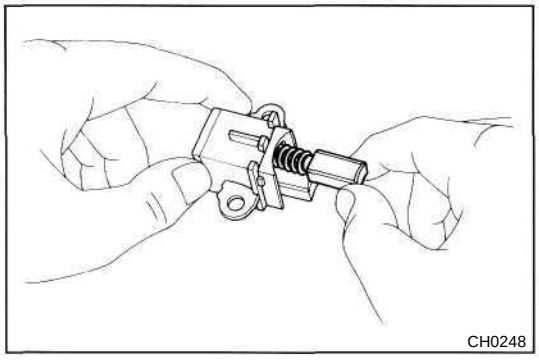

2. (Type B)
IF NECESSARY, REPLACE BRUSHES

(a) Unsolder and remove the brush and spring.

(b) Run the wire of the brush through the hole in the brush holder, and insert the spring and brush into the brush holder.

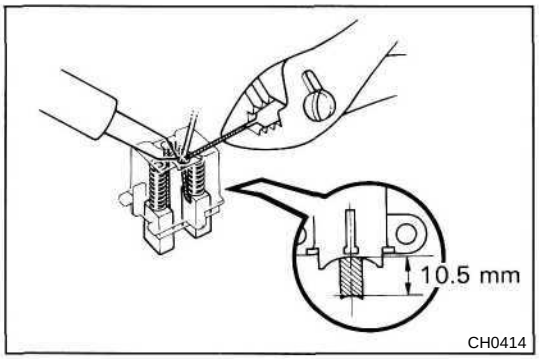

(c) Solder the brush wire to the brush holder at the exposed length.

Exposed **length: 10.5** mm **(0.413** in.)

(d) Check that the brush moves smoothly in the brush holder.

(e) Cut off the excess wire.

(f) Apply insulation paint to the soldered point.

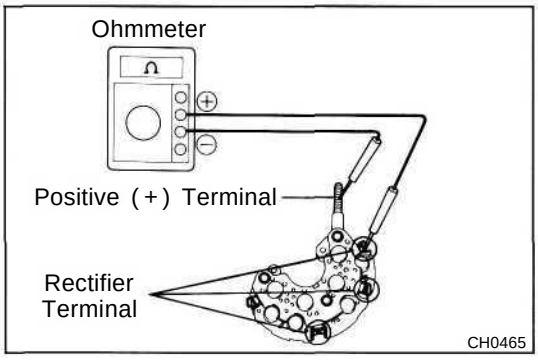

Rectifiers (Rectifier Holder)

1. INSPECT POSITIVE SIDE RECTIFIER

(a) Using an ohmmeter, connect one tester probe to the positive (+) terminal and the other to each rectifier terminal.

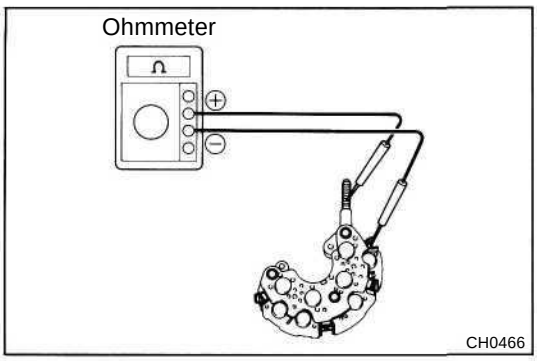

(b) Reverse the polarity of the tester probes and repeat step (a).

(c) Check that one shows continuity and the other shows no continuity.

If continuity is not as specified, replace the rectifier holder.

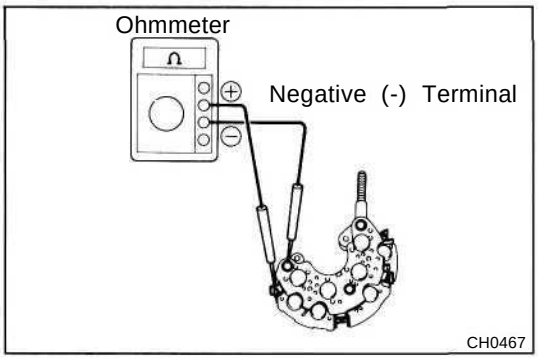

2. INSPECT NEGATIVE SIDE RECTIFIER

(a) Connect one tester probe to each rectifier terminal and the other to each rectifier negative (—) terminal.

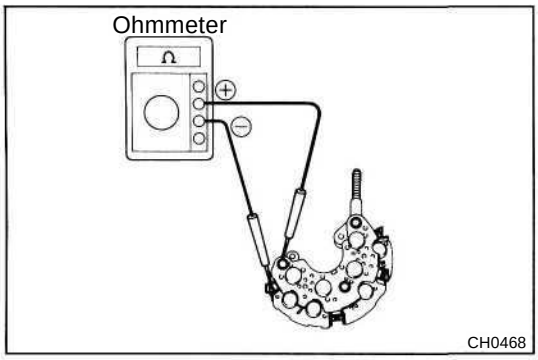

(b) Reverse the polarity of the tester probes.

(c) Check that one shows continuity and the other shows no continuity.

If continuity is not as specified, replace the rectifier holder.

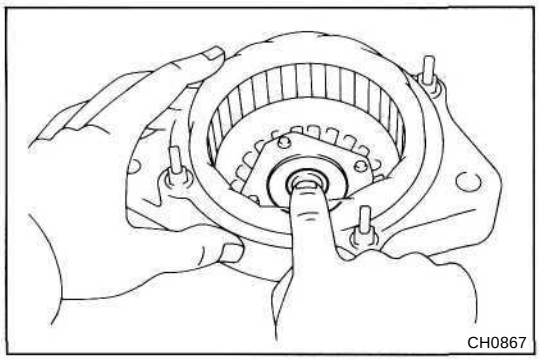

Bearings

1. INSPECT FRONT BEARING

Check that the bearing is not rough or worn.

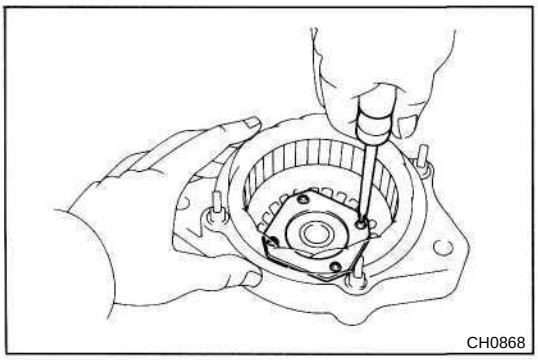

2. IF NECESSARY, REPLACE FRONT BEARING

(a) Remove the four screws, and bearing retainer.

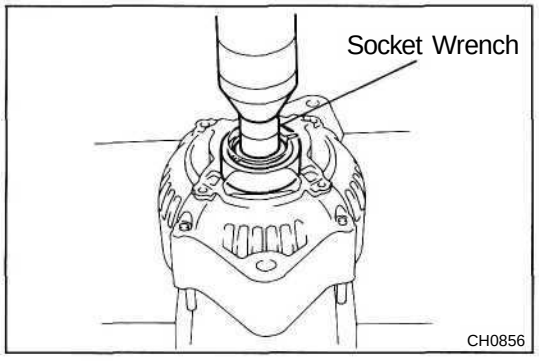

(b) Using a press and socket wrench, press out the front bearing.

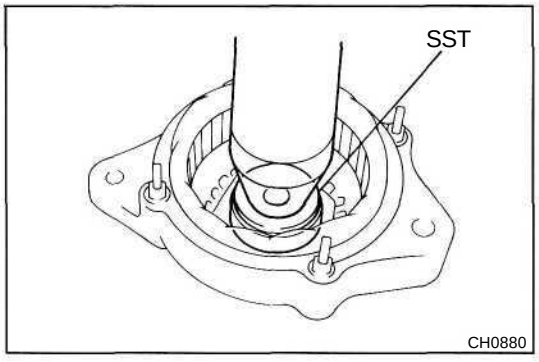

(c) Using SST and a press, press in a new bearing.
SST 09608-20012 (09608-00030)

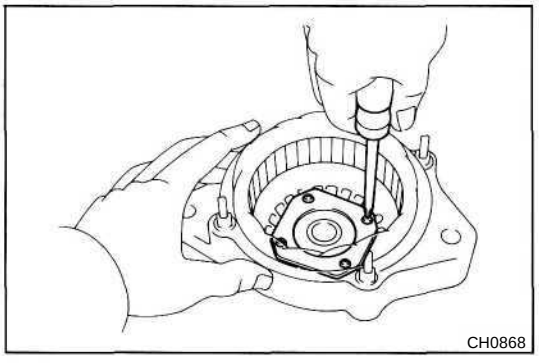

(d) Install the bearing retainer with the four screws.

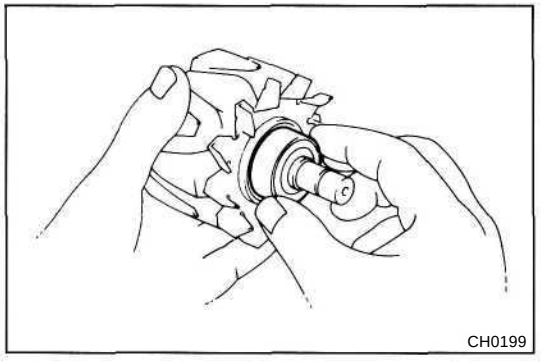

3. INSPECT REAR BEARING

Check that the bearing is not rough or worn.

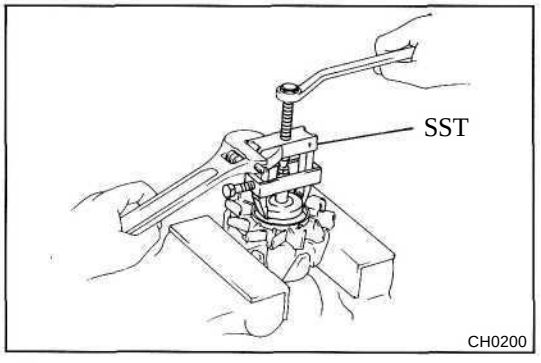

4. IF NECESSARY, REPLACE REAR BEARING

(a) Using SST, remove the bearing cover and bearing.
SST 09820-00021

NOTICE: Be careful not to damage the fan.

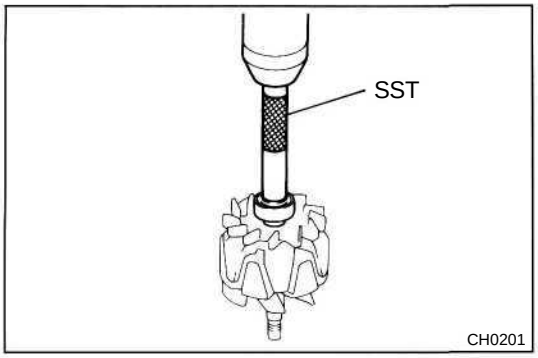

(b) Using SST and a press, press in a new bearing and bearing cover.

SST 09285-76010

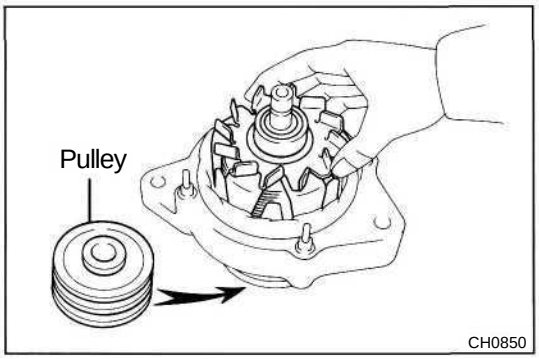

ASSEMBLY OF ALTERNATOR

(See page CH-8)

1. INSTALL ROTOR TO DRIVE END FRAME

(a) Place the rectifier end frame on the pulley.

(b) Install the rotor to the rectifier end frame.

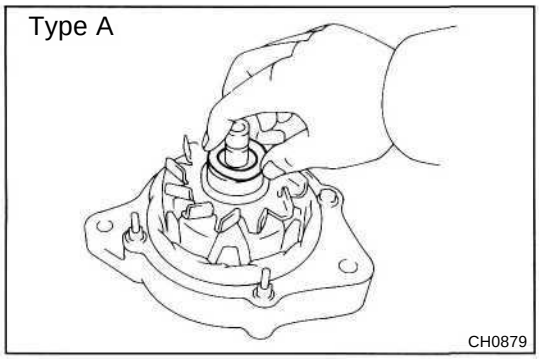

2. INSTALL RECTIFIER END FRAME

(a) (Type A)
Place the alternator washer on the rotor.

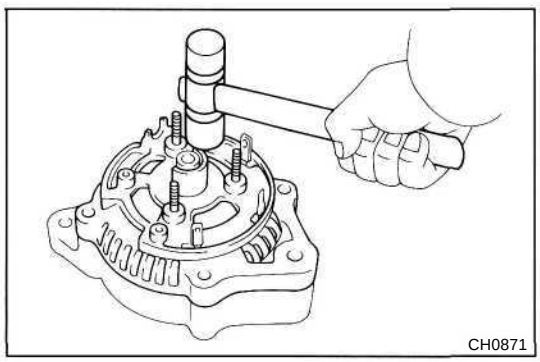

(b) Using a plastic-faced hammer, lightly tap in the end frame.

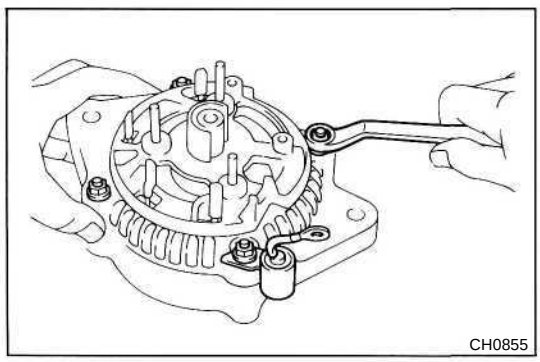

(c) (PZJ, HZJ and HDJ)
Install the codenser and four nuts.

(d) (HZBandHDB)
Install the four nuts.

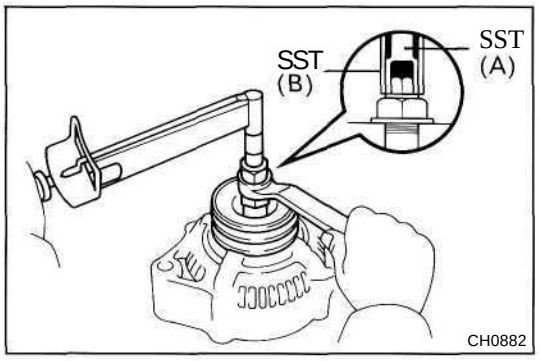

3. INSTALL PULLEY

(a) Install the pulley to the rotor shaft by tightening the pulley nut by hand.

(b) Hold SST (A) with a torque wrench, and tighten SST (B) clockwise to the specified torque.

SST 09820-63010

Torque: 400 kg-cm (29 ft-lb, 39 N·m)

(c) Check that SST (A) is secured to the pulley shaft.

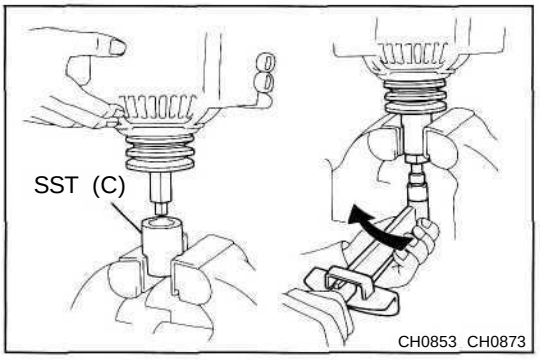

(d) As shown in the illustration, mount SST (C) in a vise, and install the alternator to SST (C).

(e) To torque the pulley nut, turn SST (A) in the direction shown in the illustration.

Torque: 1,125 kg-cm (81 ft-lb, 110 N-m)

(f) Remove the alternator from SST (C).

(g) Turn SST (B) and remove SST (A and B).

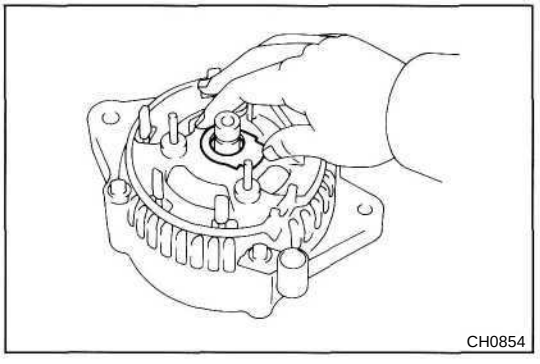

4. INSTALL RECTIFIER HOLDER

(a) (Type A)
Place the seal plate on the rectifier end frame.

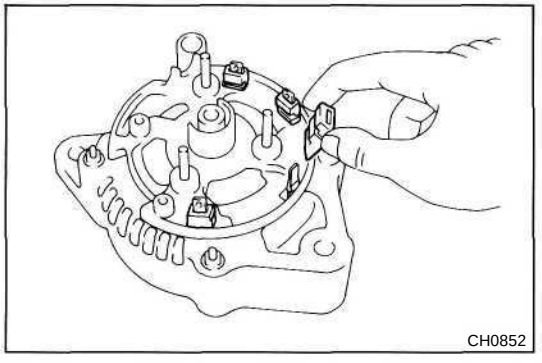

(b) Install the four rubber insulators on the lead wires.

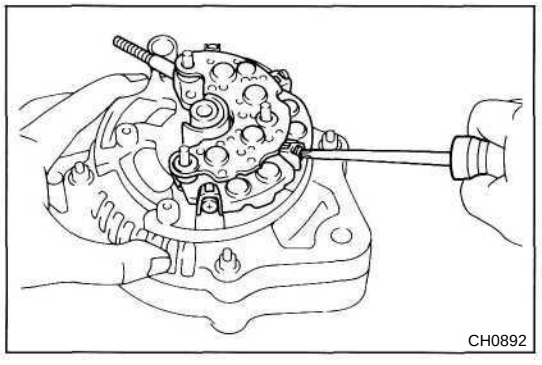

(c) Install the rectifier holder with the four screws.

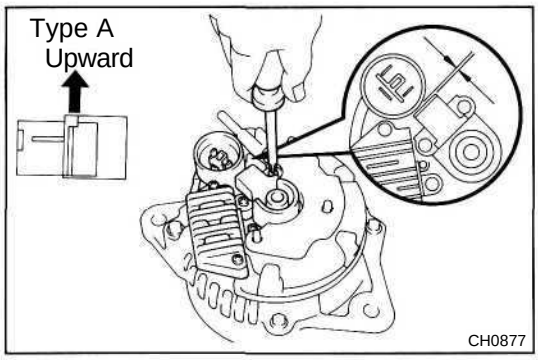

5. INSTALL IC REGULATOR AND BRUSH HOLDER (Type A)

(a) Place on the IC regulator and brush holder on the rectifier end frame.

NOTICE: Be careful about the holder installation direction.

(b) Install the five screws until there is a clearance of approx. 1.1 mm (0.043 in.) between the brush holder and connector.

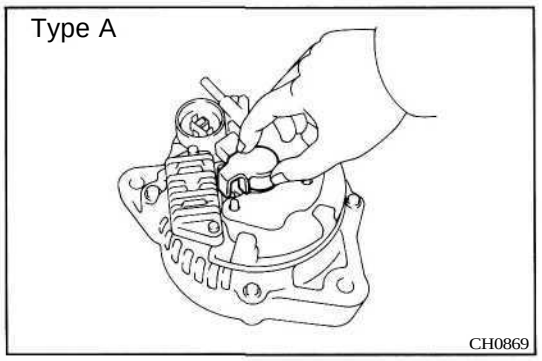

(c) Place the brush holder cover on the brush holder.

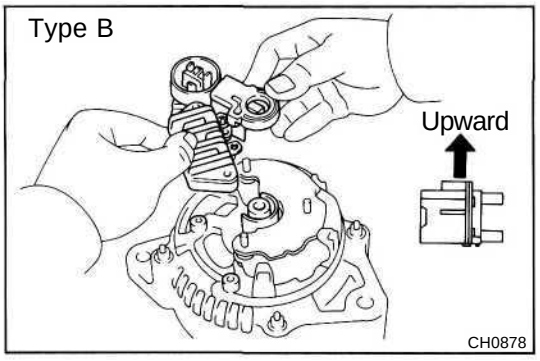

(Type B)

(a) Install the brush holder cover to the brush holder.

NOTICE: Be careful about the holder installation direction.

(b) Place the IC regulator together with the brush holder horizontally on the rectifier end frame.

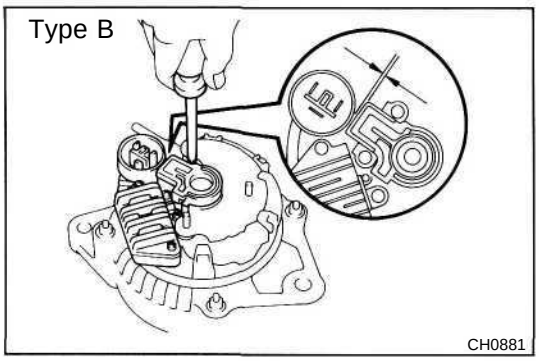

(c) Install the five screws until there is a clearance of approx. 1.1 mm (0.043 in.) between the brush holder and connector.

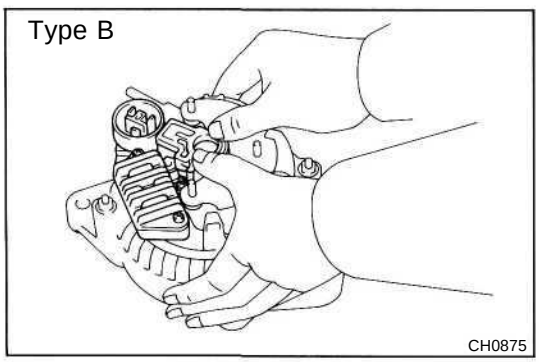

(d) Fit the brush holder cover.

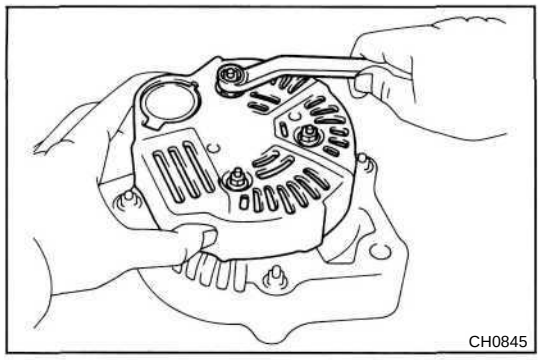

6. INSTALL REAR END COVER

(a) Install the rear end cover with the three nuts.

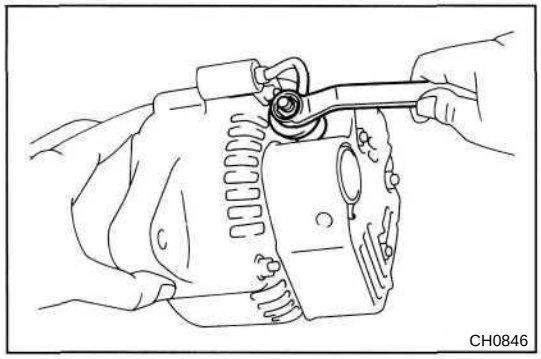

(b) (PZJ, HZJ and HDJ)
Install the terminal insulator, condenser lead wire with nut.

(c) (HZB and HDB)
Install the terminal insulator with the nut.

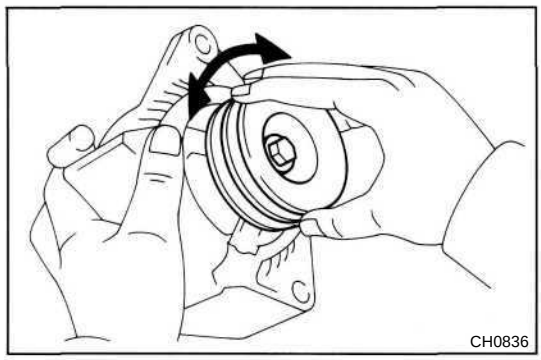

7. CHECK THAT ROTOR ROTATES SMOOTHLY

SERVICE SPECIFICATIONS

	Page
ENGINE MECHANICAL	A-2
TURBOCHARGER SYSTEM	A-8
FUEL SYSTEM	A-9
COOLING SYSTEM	A-21
LUBRICATION SYSTEM	A-21
STARTING SYSTEM	A-22
CHARGING SYSTEM	A-22

ENGINE MECHANICAL
Specifications

Engine tune-up	Coolant capacity			
	w/o Heater			
	PZJ70, 73, 75	9.6 liters	1O.1USqts	8.4 Imp. qts
	HZJ70, 73, 75			
	M/T	9.9 liters	10.5 US qts	8.7 Imp. qts
	A/T	9.7 liters	10.3 US qts	8.5 Imp. qts
	HZJ80and HDJ80			
	M/T	10.4 liters	11.0 US qts	9.2 Imp. qts
	A/T	10.2 liters	10.8 US qts	9.0 Imp. qts
	HZB30and HDB30	10.2 liters	10.8 US qts	9.0 Imp. qts
	w/ Heater			
	PZJ70, 73, 75	10.3 liters	10.9 US qts	9.1 Imp. qts
	HZJ70, 73, 75			
	M/T	10.6 liters	11.2 US qts	9.3 Imp. qts
	A/T	10.4 liters	11.0 US qts	9.2 Imp. qts
	HZJ80and HDJ80			
	M/T	11.1 liters	11.6 US qts	9.8 Imp. qts
	A/T	10.9 liters	11.5 US qts	9.6 Imp. qts
	HZB30and HDB30	14.6 liters	15.4 US qts	12.8 Imp. qts
	w/ Front and rear heaters			
	PZJ70, 73, 75	11.3 liters	11.9 US qts	9.9 Imp. qts
	HZJ70, 73, 75	11.6 liters	12.2 US qts	10.2 Imp. qts
	HZJ80and HDJ80			
	M/T (Europe)	12.0 liters	12.7 US qts	10.6 Imp. qts
	A/T (Europe)	11.8 liters	12.5 US qts	10.4 Imp. qts
	M/T (Othres)	11.9 liters	12.6 US qts	10.5 Imp. qts
	A/T (Others)	11.7 liters	12.4 US qts	10.3 Imp. qts
	Engine oil capacity (PZJ70, 73, 75)			
	Drain and refill w/ Oil filter change	9.0 liters	9.5 US qts	7.9 Imp. qts
	w/o Oil filter change	7.7 liters	8.1 US qts	6.8 Imp. qts
	Dry fill	9.3 liters	9.8 US qts	8.2 Imp. qts
	Engine oil capacity (HZJ70, 73, 75)			
	Drain and refill w/ Oil filter change	9.5 liters	10.0 US qts	8.4 Imp. qts
	w/o Oil filter change	8.2 liters	8.7 US qts	7.2 Imp. qts
	Dry fill	9.8 liters	10.4 US qts	8.6 Imp. qts
	Engine oil capacity (HZJ80 and HDJ80)			
	Drain and refill w/ Oil filter change	9.3 liters	9.8 US qts	8.1 Imp. qts
	w/o Oil filter change	8.0 liters	8.5 US qts	7.0 Imp. qts
	Dry fill	9.6 liters	10.1 US qts	8.4 Imp. qts
	Engine oil capacity (HZB30 and HDB30)			
	Drain and refill w/ Oil filter change	9.8 liters	10.4 US qts	8.6 Imp. qts
	w/o Oil filter change	8.5 liters	9.0 US qts	7.5 Imp. qts
	Dry fill	10.1 liters	10.7 US qts	8.9 Imp. qts
	Engine oil API grade			
	Europe	CD or better		
	Others	CC, CD or better		
	Alternator drive belt			
	Deflection New belt	6-7 mm	0.24-0.28 in.	
	Used belt	8-11 mm	0.31 -0.43 in.	
	Tension (Reference) New belt	45 - 55 kg		
	Used belt	20 - 35 kg		
	Battery specific gravity			
	When fully charged at 20°C (68°F)			
	95D31R and 95D31 L	1.27-1.29		
	ex. (95D31R and 95D31 L)	1.25-1.27		

Specification (Cont'd)

Engine tune-up (cont'd)	Valve clearance	Intake	0.1 5 - 0.25 mm 0.006 - 0.010 in.
		Exhaust	0.35 - 0.45 mm 0.014 - 0.018 in.
	New valve adjusting shim thickness		2.35 mm 0.0925 in.
			2.40 mm 0.0945 in.
			2.45 mm 0.0965 in.
			2.50 mm 0.0984 in.
			2.55 mm 0.1004 in.
			2.60 mm 0.1024 in.
			2.65 mm 0.1043 in.
			2.70 mm 0.1063 in.
			2.75 mm 0.1083 in.
			2.80 mm 0.1102 in.
			2.85 mm 0.1122 in.
			2.90 mm 0.1142 in.
			2.95 mm 0.1161 in.
			3.00 mm 0.1181 in.
			3.05 mm 0.1201 in.
			3.10 mm 0.1220 in.
			3.15 mm 0.1240 in.
			3.20 mm 0.1260 in.
			3.25 mm 0.1280 in.
			3.30 mm 0.1299 in.
	Injection timing		
	Plunger stroke	1 PZ	0.82 - 0.88 mm 0.0323 - 0.0346 in.
		1HZ	1.03-1.09 mm 0.0406-0.0429 in.
		1HD-T	1.29-1.35 mm 0.0508-0.0531 in.
	Idle speed	1 PZ	650 rpm
		1HZ (M/T)	650 rpm
		1 HZ (A/T)	710 rpm
		1HD-T(M/T)	650 rpm
		1HD-T (A/T)	800 rpm
	Maximum speed	1 PZ and 1 HZ	4,600 rpm
		1HD-T	4,400 rpm
	A/C idle-up setting speed		950 rpm
	Injection order	1 PZ	1 - 2 - 4 - 5 - 3
		1 HZ and 1HD-T	1 _ 4 _ 2 - 6 - 3 - 5
Compression pressure	Engine revolution at 250 rpm		
	1PZand1HZ	STD	37.0 kg/cm^2 (526 psi, 3,628 kPa) or more
		Limit	27.0 kg/cm^2 (384 psi, 2,648 kPa)
	1HD-T	STD	35.0 kg/cm^2 (498 psi, 3,432 kPa) or more
		Limit	25.0 kg/cm^2 (356 psi, 2,452 kPa)
	Difference of pressure between each cylinder		5.0 kg/cm^2 (71 psi, 490 kPa) or less
Idler pulley tension spring	Free length		72.7 mm 2.862 in.
	Installed load at 90.1 mm (3.547 in.)		23 - 28 kg (50.7 - 61.7 lb, 225 - 275 N)
Timing gear	Idler gear inside diameter		45.000-45.025 mm 1.7717 - 1.7726 in.
	Idler gear shaft diameter		44.950 - 44.975 mm 1.7679 - 1.7707 in.
	Idler gear oil clearance	STD	0.025 - 0.075 mm 0.0010 - 0.0030 in.
		Limit	0.20 mm 0.0079 in.
	Gear backlash	STD	0.05 - 0.1 5 mm 0.0020 - 0.0059 in.
		Limit	0.30 mm 0.0118 in.
	Idler gear thrust clearance	STD	0.05 - 0.1 5 mm 0.0020 - 0.059 in.
		Limit	0.30 mm 0.0118 in.

Specifications (Cont'd)

Cylinder head	Warpage			Limit	0.20 mm 0.0079 in.
	Valve seat	Refacing angle		Intake	25°, 45°, 70"
				Exhaust	25°, 45°, 60°
		Contacting angle			45°
		Contacting width		Intake	1.5-1.9 mm 0.059 - 0.075 in.
				Exhaust	1.8-2.2 mm 0.071 -0.087 in.
	Cylinder head bolt outer diameter			STD	10.800-11.000 mm 0.4252-0.4331 in.
				Limit	10.55 mm 0.41 54 in.
	New cylinder head gasket thickness				
	1PZ	Hole number "1"			1.16-1.24 mm 0.0457 - 0.0488 in.
		Hole number "3"			1.26-1.34 mm 0.0496-0.0528 in.
		Hole number "5"			1.36-1.44 mm 0.0535 - 0.0567 in.
	1HZand1HD-T	Cutout number "1"			1.15-1.25 mm 0.0453-0.0492 in.
		Cutout number "3"			1.25-1.35 mm 0.0492-0.0531 in.
		Cutout number "5"			1.35-1.45 mm 0.0531 - 0.0571 in.
Valve guide bushing	Inside diameter				8.010 - 8.030 mm 0.31 54 - 0.3161 in.
	Outside diameter			STD	13.004-13.025 mm 0.5112-0.5128 in.
				0/S 0.05	13.054-13.075 mm 0.51 54 - 0.5148 in.
Valve	Valve overall length		STD	Intake	103.29 – 103.69 mm 4.0655 - 4.0823 in.
				Exhaust	103.14-103.54 mm 4.0606-4.0764 in.
			Limit	Intake	102.79 mm 4.0468 in.
				Exhaust	102.64 mm 4.0409 in.
	Valve face angle				44.5°
	Stem diameter			Intake	7.975-7.990 mm 0.3140 - 0.3146 in.
				Exhaust	7.960 - 7.975 mm 0.31 34 - 0.3140 in.
	Stem oil clearance		STD	Intake	0.020- 0.055 mm 0.0008-0.0022 in.
				Exhaust	0.035 - 0.070 mm 0.0014 - 0.0028 in.
			Limit	Intake	0.08 mm 0.0031 in.
				Exhaust	0.10 mm 0.0039 in.
	Margin thickness		STD	Intake	1.6 mm 0.063 in.
				Exhaust	1.7 mm 0.067 in.
			Limit	Intake	1.1 mm 0.043 in.
				Exhaust	1.2 mm 0.047 in.
Valve spring	Free length				
	Yellow painted mark				46.20 mm 1.8189 in.
	Blue painted mark				49.14 mm 1.9346 in.
	Installed tension at 37.0 mm (1.457 in.)				30.7-33.9 kg (67.7-74.7 lb, 301 -332 N)
	Squareness			Limit	2.0 mm 0.075 in.
Valve lifter	Lifter diameter				40.892-40.902 mm 1.6099 - 1.6103 in.
	Cylinder head lifter bore diameter				40.960-40.980 mm 1.6126 - 1.6134 in.
	Oil clearance			STD	0.058 - 0.083 mm 0.0023 - 0.0033 in.
				Limit	0.10 mm 0.0039 in.
Manifold	Warpage			Limit	0.40 mm 0.0157 in.

Specifications (Cont'd)

Camshaft	Thrust clearance		STD	0.10-0.20 mm	0.0039-0.0079 in.
			Limit	0.30 mm	0.0118 in.
	Journal oil clearance				
	No.1 journal		STD	0.022 - 0.074 mm	0.0009 – 0.0029 in.
			Limit	0.10 mm	0.0039 in.
	Others		STD	0.030 - 0.066 mm	0.001 2 - 0.0026 in.
			Limit	0.10 mm	0.0039 in.
	Journal diameter				
	No.1 journal		STD	34.969 - 34.985 mm	1.3767 - 1.3774 in.
	Others			27.986-27.998 mm	1.1018 - 1.1023 in.
	Circle runout		Limit	0.10 mm	0.0039 in.
	Cam lobe height				
	1PZand1HZ	STD	Intake	55.090-55.110 mm	2.1689 - 2.1 697 in.
			Exhaust	55.940-55.960 mm	2.2024-2.2031 in.
		Limit	Intake	54.59 mm	2.1419 in.
			Exhaust	55.44 mm	2.1827 in.
	1HD-T	STD	Intake	54.440-54.460 mm	2.1433-2.1441 in.
			Exhaust	55.940 - 55.960 mm	2.2024 - 2.2031 in.
		Limit	Intake	53.94 mm	2.1236 in.
			Exhaust	55.44 mm	2.1827 in.
Combustion chamber (IPZand 1HZ)	Protrusion			Minus 0.04- Plus 0.04 mm	Minus 0.0016- Plus 0.0016 in.
	Shim thickness			0.03 mm	0.0012 in.
Cylinder block	Cylinder head surface warpage		Limit	0.20 mm	0.0079 in.
	Cylinder bore diameter				
		STD	Mark"1"	94.000 - 94.010 mm	3.7008 - 3.701 2 in.
			Mark "2"	94.010 - 94.020 mm	3.701 2 - 3.7016 in.
			Mark "3"	94.020-94.030 mm	3.7016 - 3.7020 in.
		Limit	STD	94.23 mm	3.7098 in.
			0/S 0.50	94.73 mm	3.7295 in.
	Main journal bore diameter				
	(Reference)	STD	Mark " 1 "	71.000 - 71.006 mm	2.7953 - 2.7955 in.
			Mark "2"	71.006-71.01 2 mm	2.7955 - 2.7957 in.
			Mark "3"	71.01 2-71.01 8 mm	2.7957 - 2.7960 in.
Piston and piston ring	Piston diameter	STD	Mark'T'	93.95 - 93.96 mm	3.6988 - 3.6992 in.
			Mark "2"	93.96 – 93.97 mm	3.6992 - 3.7000 in.
			Mark "3"	93.97 – 93.98 mm	3.7000 - 3.7000 in.
		0/S 0.50		94.45 _ 94.48 mm	3.7185 - 3.71 97 in.
	Piston oil clearance		STD	0.04-0.06 mm	0.0016-0.0024 in.
			Limit	0.14 mm	0.0055 in.
	Piston ring groove clearance		No.1	0.050 - 0.095 mm	0.0020 - 0.0037 in.
			No.2	0.060-0.100 mm	0.0024-0.0039 in.
			Oil	0.030 - 0.070 mm	0.0012 - 0.0028 in.
	Piston ring end gap	STD	No.1	0.27-0.54 mm	0.0106-0.0213 in.
			No.2	0.40 - 0.62 mm	0.0118 - 0.0244 in.
			Oil	0.20 - 0.52 mm	0.0079 - 0.0205 in.
		Limit	No.1	1.34 mm	0.0591 in.
			No.2	1.42 mm	0.0551 in.
			Oil	1.32 mm	0.0520 in.

Specification (Cont'd)

Connecting rod	Thrust clearance	STD	0.10-0.20 mm	0.0039-0.0079 in.
		Limit	0.30 mm	0.0118 in.
	Connecting rod oil clearance			
	STD STD		0.036 - 0.054 mm	0.0014 - 0.0021 in.
		U/S 0.25, U/S 0.50	0.037-0.077 mm	0.0015-0.0030 in.
	Limit		0.10 mm	0.0039 in.
	Connecting rod bearing center wall thickness			
	(Reference) STD	Mark "2"	1.486 - 1.489 mm	0.0585 - 0.0586 in.
		Mark "3"	1.489-1.492 mm	0.0586 - 0.0587 in.
		Mark "4"	1.492-1.495 mm	0.0587 - 0.0589 in.
		Mark "5"	1.495-1.498 mm	0.0589 - 0.0590 in.
		Mark "6"	1.498-1.501 mm	0.0590-0.0591 in.
	Rod bending Limit per 100 mm (3.94 in.)		0.03 mm	0.0012 in.
	Twist Limit per 100 mm (3.94 in.)		0.15 mm	0.0059 in.
	Connecting rod bolt outer diameter	STD	8.300 - 8.400 mm	0.3268 - 0.3307 in.
		Limit	7.95 mm	0.3130 in.
	Bushing inside diameter			
	IPZand 1HZ		29.008-29.020 mm	1.1 420 - 1.1 425 in.
	1HD-T		33.008-33.020mm	1.2995 - 1.3000 in.
	Piston pin diameter			
	IPZand 1HZ		29.000-29.012mm	1.1417 - 1.1422 in.
	1HD-T		33.000 - 33.01 2 mm	1.2992 - 1.2997 in.
	Piston pin oil clearance	STD	0.004 - 0.01 2 mm	0.0002 - 0.0005 in.
		Limit	0.03 mm	0.0012 in.
	Big end inner diameter			
	(Reference) STD	Mark " 1 "	62.014 - 62.020 mm	2.441 5 - 2.4417 in.
		Mark "2"	62.020 - 62.026 mm	2.4417 - 2.4420 in.
		Mark "3"	62.026 - 62.032 mm	2.4420 - 2.4422 in.
Crankshaft	Thrust clearance	STD	0.04-0.24 mm	0.0016-0.0094 in.
		Limit	0.30 mm	0.0118 in.
	Thrust washer thickness	STD	2.930-2.980 mm	0.11 54 - 0.11 73 in.
	Main journal oil clearance			
	STD STD		0.036-0.054 mm	0.0014-0.0021 in.
		U/S 0.25, U/S 0.50	0.037-0.077 mm	0.001 5-0.0030 in.
	Limit		0.10 mm	0.0039 in.
	Main journal diameter STD	Mark'T'	66.994 - 57.000 mm	2.7953 - 2.7955 in.
		Mark "2"	66.988 - 66.994 mm	2.7955 - 2.7957 in.
		Mark "3"	66.982 - 66.988 mm	2.7957 - 2.7960 in.
	U/S 0.25		66.745 - 66.755 mm	2.6278 - 2.3132 in.
	U/S 0.50		66.495 - 66.505 mm	2.61 79 - 2.3033 in.
	Main bearing center wall thickness			
	(Reference) STD	Mark "2"	1.486 - 1.489 mm	0.0585 - 0.0586 in.
		Mark "3"	1.489 - 1.492 mm	0.0586 - 0.0587 in.
		Mark "4"	1.492 - 1.495 mm	0.0587 - 0.0589 in.
		Mark "5"	1.495 - 1.498 mm	0.0589 - 0.0590 in.
		Mark "6"	1.498-1.501 mm	0.0590-0.0591 in.
	Crank pin diameter STD	Mark"1"	58.994 - 59.000 mm	2.3226 - 2.3228 in.
		Mark "2"	58.988 - 58.994 mm	2.3224 - 2.3226 in.
		Mark "3"	58.982 - 58.988 mm	2.3221 - 2.3224 in.
	U/S0.25		58.745 - 58.755 mm	2.3128 - 2.3132 in.
	U/S0.50		58.495 - 58.505 mm	2.3029 - 2.3033 in.
	Circle runout	Limit	0.06 mm	0.0024 in.
	Main journal taper and out-of-round	Limit	0.02 mm	0.0008 in.
	Crank pin taper and out-of-round	Limit	0.02 mm	0.0008 in.
Main bearing	Main bearing cap bolt outer diameter			
		STD	11.800-12.000 mm	0.4646-0.4724 in.
		Limit	11.50 mm	0.4528 in.

Torque Specifications

Part tightened		kg-cm	ft-lb	N·m
Injection pump x Timing gear case		185	13	18
Injection pump x Injection pump stay		700	51	69
Injection pump distributive head plug bolt				
IPZand 1HZ		170	12	17
1HD-T		250	18	25
No.1 camshaft timing pulley x Camshaft		1,000	72	98
No.2 camshaft timing pulley x Injection pump drive gear		315	23	31
Idler pulley bolt x Cylinder head		270	20	26
Spring bolt x Cylinder head		270	20	26
Injection pump drive gear x Injection pump		1,000	27	98
Idler gear (thrust plate) x Cylinder block		400	29	39
Timing gear cover x Timing gear case		200	14	20
Timing gear cover x Cylinder block		200	14	20
No.1 crankshaft pulley x Crankshaft		5,000	362	490
No.2 crankshaft pulley x No.1 crankshaft pulley		250	18	25
Vacuum pump x Timing gear case		400	29	39
Oil pipe * Vacuum pump		185	13	18
Oil pipe x Cylinder block		185	13	18
Cylinder head x Cylinder block	1st	700	51	69
	2nd	90° turns		
	3rd	90° turns		
Camshaft bearing cap x Cylinder head No.1 journal		250	18	25
Others		185	13	18
Camshaft oil seal retainer x Cylinder head		200	14	20
Exhaust manifold x Cylinder head		400	29	39
(For additional tighteninig torque)		330	24	32
Glow plug x Cylinder head		130	9	13
Injection nozzle x Cylinder head	1 PZ and 1 HZ	650	47	64
	1HD-T	400	29	39
Nozzle leakage pipe x Injection nozzle	1 PZ and 1 HZ	300	22	29
	1HD-T	125	9	12
Water outlet x Cylinder head		200	14	20
Intake manifold x Cylinder head		200	14	20
Oil dipstick guide x Intake manifold		200	14	20
Oil dipstick guide x Oil cooler cover		200	14	20
Main bearing cap x Cylinder head		1,050	76	103
Connecting rod cap x Connecting rod	1st	375	27	37
	2nd	90° turns		
Main bearing cap x Cylinder block	1st	1,050	76	103
	2nd	90° turns		
Oil nozzle x Cylinder block		275	20	27
Rear oil seal retainer x Cylinder block		65	56 in.-lb	6.4
Rear end plate x Cylinder block		185	13	18
Flywheel (M/T) x Crankshaft		1,300	94	127
Flywheel (drive plate) (A/T) x Crankshaft		1,300	94	127

TURBOCHARGER SYSTEM

Specifications

Turbocharger	Turbocharging pressure	0.50-0.65 kg/cn^2 (7.1 -9.2 psi, 49-64 kPa)
	Impeller wheel axial play	0.13 mm (0.0051 in.) or less
	Impeller wheel radial play	0.18 mm (0.0071 in.) or less

Torque Specifications

Part tightened	kg-cm	ft-lb	Nm
Turbine outlet elbow x Turbocharger	530	38	52
No.1 turbo water pipe x Turbocharger	80	69 in.-lb	7.8
No.2 turbo heat insulator x Turbocharger	80	69 in.-lb	7.8
Turbocharger * Exhaust manifold	530	38	52
Exhaust manifold x Cylinder head	400	29	39
(For additional tighteninig torque)	330	24	32
Turbo oil pipe x Cylinder block (Union bolt)	185	13	18
Turbo oil pipe x Turbocharger	250	18	25
Turbocharger stay x Cylinder block	1,200	87	118
Turbocharger stay x Turbocharger	1,200	87	118
Turbocharger heat insulator x Turbocharger	185	13	8
Exhaust manifold heat insulator x Exhaust manifold	185	13	18
Intake pipe x Intake manifold	200	14	20

FUEL SYSTEM
Specifications

Fuel heater	Resistance at 20°C (68°F)		**0.5 - 2.0 Q**
Injection nozzles ("IPZand 1HZ)	Nozzle type		DN20PD32
	Nozzle opening pressure	New nozzle	145-155 kg/cm^2 (2,062 - 2,205 psi, 1 4,220 - 1 5,200 kPa)
		Reused nozzle	135-155 kg/cm^2 (1,920 - 2,205 psi, 1 3,239 - 1 5,200 kPa)
	Adjusting shim thickness		0.900 mm 0.0354 in. 0.925 mm 0.0364 in. 0.950 mm 0.0374 in. 0.975 mm 0.0384 in. 1.000 mm 0.0394 in. 1.025 mm 0.0404 in. 1.050 mm 0.041 3 in. 1.075 mm 0.0423 in. 1.100 mm 0.0433 in. 1.125 mm 0.0443 in. 1.150 mm 0.0453 in. 1.175 mm 0.0463 in. 1.200 mm 0.0472 in. 1.225 mm 0.0482 in. 1.250 mm 0.0492 in. 1.275 mm 0.0502 in. 1.300 mm 0.0512 in. 1.325 mm 0.0522 in. 1.350 mm 0.0531 in. 1.375 mm 0.0541 in. 1.400 mm 0.0551 in. 1.425 mm 0.0561 in. 1.450 mm 0.0571 in. 1.475 mm 0.0581 in. 1.500 mm 0.0591 in. 1.525 mm 0.0600 in. 1.550 mm 0.0610 in. 1.575 mm 0.0620 in. 1.600 mm 0.0630 in. 1.625 mm 0.0640 in. 1.650 mm 0.0650 in. 1.675 mm 0.0659 in. 1.700 mm 0.0669 in. 1.725 mm 0.0679 in. 1.750 mm 0.0689 in. 1.775 mm 0.0699 in. 1.800 mm 0.0709 in. 1.825 mm 0.071 9 in. 1.850 mm 0.0728 in. 1.875 mm 0.0738 in. 1.900 mm 0.0748 in. 1.925 mm 0.0758 in. 1.950 mm 0.0768 in.

Specification (Cont'd)

Injection nozzle (1HD-T)	Nozzle type	KBAL
	Pre-lift dimension	0.08 - 0.10 mm 0.0031 - 0.0039 in.
	Nozzle opening pressure	
	No.2 (Inspection pressure)	132-138 kg/cm^2 (1,877 - 1,963 psi, 1 2,945 - 13,533 kPa)
	No.1	180-190 kg/cm^2 (2,560-2,702 psi, 17,652-18,633 kPa)
	Pre-lift and nozzle opening pressure adjusting shim thickness	0.700 mm 0.0276 in.
		0.750 mm 0.0295 in.
		0.800 mm 0.0315 in.
		0.850 mm 0.0335 in.
		0.900 mm 0.0354 in.
		0.950 mm 0.0374 in.
		0.975 mm 0.0384 in.
		1.000 mm 0.0394 in.
		1.025 mm 0.0404 in.
		1.050 mm 0.0413 in.
		1.075 mm 0.0423 in.
		1.100 mm 0.0433 in.
		1.125 mm 0.0443 in.
		1.150 mm 0.0453 in.
		1.175 mm 0.0463 in.
		1.200 mm 0.0472 in.
		1.225 mm 0.0482 in.
		1.250 mm 0.0492 in.
		1.280 mm 0.0504 in.
		1.290 mm 0.0508 in.
		1.300 mm 0.0512 in.
		1.310 mm 0.0516 in.
		1.320 mm 0.0520 in.
		1.330 mm 0.0524 in.
		1.340 mm 0.0528 in.
		1.350 mm 0.0531 in.
		1.360 mm 0.0535 in.
		1.370 mm 0.0539 in.
		1.380 mm 0.0543 in.
		1.390 mm 0.0547 in.
		1.400 mm 0.0551 in.
		1.410 mm 0.0555 in.
		1.420 mm 0.0559 in.
		1.430 mm 0.0563 in.
		1.440 mm 0.0567 in.
		1.450 mm 0.0571 in.
		1.460 mm 0.0575 in.
		1.470 mm 0.0579 in.
		1.480 mm 0.0583 in.
		1.490 mm 0.0587 in.
		1.500 mm 0.0591 in.
		1.510 mm 0.0594 in.
		1.520 mm 0.0598 in.
		1.530 mm 0.0602 in.
		1.540 mm 0.0606 in.
		1.550 mm 0.0610 in.
		1.560 mm 0.0614 in.
		1.570 mm 0.0618 in.
		1.580 mm 0.0622 in.
		1.590 mm 0.0626 in.
		1.600 mm 0.0630 in.

Specification (Cont'd)

Injection nozzles (1HD-T) (cont'd)	Pre-lift and nozzle opening pressure adjusting shim thickness (cont'd)	1.610 mm	0.0634 in.
		1.620 mm	0.0638 in.
		1.630 mm	0.0641 in.
		1.640 mm	0.0646 in.
		1.650 mm	0.0650 in.
		1.660 mm	0.0654 in.
		1.670 mm	0.0657 in.
		1.680 mm	0.0661 in.
		1.690 mm	0.0665 in.
		1.700 mm	0.0669 in.
		1.750 mm	0.0689 in.
		1.800 mm	0.0709 in.
Injection pump	Direction of rotation	Clockwise as seen from drive side	
	Injection order 1 PZ	1 - 2 - 4 - 5 - 3 (D - E - A - B - C)	
	1 HZ and 1HD-T	1 - 4 - 2 - 6 - 3 - 5 (D - E - F - A - B - C)	
	Roller height variation	0.02 mm	0.0008 in.
	Plunger spring squareness	2.0 mm	0.079 in.
	Spring free length		
	Delivery valve spring		
	IPZand 1HZ	24.4 mm	0.961 in.
	1HD-T	19.1 mm	0.752 in.
	Plunger spring		
	IPZand 1HZ	30.0 mm	1.181 in.
	1HD-T	31.2 mm	1.228 in.
	Coupling spring		
	IPZand 1HZ	16.6 mm	0.654 in.
	1HD-T	15.5 mm	0.610 in.
	Pneumatic bellows spring		
	IPZand 1HZ (w/ HAC)	35.0 mm	1.378 in.
	Boost compensator spring		
	1HD-T (Europe)	19.7 mm	0.776 in.
	1HD-T (Others w/o BACS)	19.6 mm	0.772 in.
	1HD-T (Others w/ BACS)	21.8 mm	0.858 in.
	Pickup sensor resistance	600 - 800 Ω	
	Timer adjusting screw protrusion pre-setting	7.5 - 8.0 mm	0.295 - 0.31 5 in.
	Plunger spring shim thickness	0.5 mm	0.020 in.
		0.8 mm	0.031 in.
		1.0 mm	0.039 in.
		1.2 mm	0.047 in.
		1.5 mm	0.059 in.
		1.8mm	0.071 in.
		2.0 mm	0.079 in.
	Plunger adjusting shim thickness 1PZ	1.9 mm	0.075 in.
		2.0 mm	0.079 in.
		2.1 mm	0.083 in.
		2.2 mm	0.087 in.
		2.3 mm	0.091 in.
		2.4 mm	0.094 in.
		2.5 mm	0.098 in.
		2.6 mm	0.102 in.
		2.7 mm	0.106 in.
		2.8 mm	0.110 in.
		2.9 mm	0.114 in.

Specification (Cont'd)

Injection pump (cont'd)	Plunger adjusting shim thickness 1HZ and 1HD-T (for pre-stroke)	1.90 mm	0.0748 in.
		1.95 mm	0.0768 in.
		2.00 mm	0.0787 in.
		2.05 mm	0.0807 in.
		2.10 mm	0.0827 in.
		2.15 mm	0.0846 in.
		2.20 mm	0.0866 in.
		2.25 mm	0.0886 in.
		2.30 mm	0.0906 in.
		2.35 mm	0.0925 in.
		2.40 mm	0.0945 in.
		2.45 mm	0.0965 in.
		2.50 mm	0.0984 in
		2.55 mm	0.1004 in.
		2.60 mm	0.1024 in.
		2.65 mm	0.1043 in.
		2.70 mm	0.1063 in.
		2.75 mm	0.1083 in.
		2.80 mm	0.1102 in.
		2.85 mm	0.1122 in.
		2.90 mm	0.1142 in.
		2.94 mm	0.1157 in.
		2.99 mm	0.1177 in.
		3.04 mm	0.1197 in.
		3.09 mm	0.1216 in.
		3.14 mm	0.1236 in.
		3.19 mm	0.1256 in.
	Flyweight holder thrust clearance	0.1 5-0.35 mm	0.0059-0.0138 in.
	Governor shaft protrusion	0.5-2.0 mm	0.020 - 0.079 in.
	Governor gear adjusting washer thickness	1.05 mm	0.0413 in.
		1.25 mm	0.0492 in.
		1.45 mm	0.0571 in.
		1.65 mm	0.0650 in.
		1.85 mm	0.0728 in.
	Boost compensator adjusting shim thickness	1.1 mm	0.039 in.
		1.3mm	0.051 in.
		1.5 mm	0.059 in.
		1.7 mm	0.067 in.
		1.9 mm	0.075 in.
		2.1 mm	0.083 in.
		2.3 mm	0.090 in.
		2.5 mm	0.098 in.
		2.7 mm	0.106 in.
		2.9mm	0.114 in.
		3.1mm	0.122 in.
		3.3mm	0.130 in.

Injection Pump Adjustment

Preparations of pump tester	Test nozzle type Test nozzle opening pressure Injection pipe Outer diameter Inner diameter Length Minimum bending radius Fuel temperature Fuel feeding pressure			DN12SD12 145-155 kg/cm^2 (2,062 - 2,205 psi, 1 4,220 - 1 5,200 kPa) 6.0 mm 0.236 in. 2.0 mm 0.079 in. 840 mm 33.07 in. 25 mm (0.98 in.) or more 40-45°C 0.2 kg/cm^2 (2.8 psi, 20 kPa)	
Full load injection volume pre-setting	Item	Adjusting lever position	Pump rpm	No. of measuring strokes	Injection volume cc (cu in.)
	1PZ	Maximum speed side	1,200	200	11.78-12.18 (0.72-0.74)
	1HZ	Maximum speed side	1,200	200	11.80-12.20 (0.72-0.74)
	1HD-T (w/o BACS)	Maximum speed side	1,800	200	13.58-14.18 (0.83-0.87)
	1HD-T (w/ BACS)	Maximum speed side	1,800	200	13.14-13.74 (0.80-0.84)
Maximum speed pre-setting	Item	Adjusting lever position	Pump rpm	No. of measuring strokes	Injection volume cc (cu in.)
	1PZ	Maximum speed side	2,300	200	4.0-6.0 (0.24-0.37)
	1HZ	Maximum speed side	2,300	200	3.0-5.0 (0.18-0.31)
	1HD-T	Maximum speed side	2,200	200	3.0-5.0 (0.18-0.31)
Pump inner pressure	Item	Pump rpm	Inner pressure kg/cm^2 (psi, kPa)		
	1PZ	500	2.45 - 3.05 (35 - 43, 240 - 299)		
		2,000	6.4-7.0 (91 -100, 628-686)		
	1HZ	500	2.5 -3.1 (36-44, 245-304)		
		2,000	7.1 -7.7 (101-110, 696-755)		
	1HD-T (w/o BACS)	400	2.2-3.1 (31 -44, 216-304)		
		1,900	8.1 -8.4 (115-119, 794-824)		
		2,200	9.0 (128, 883) or less		
	1HD-T (w/ BACS)	400	2.7-3.6 (38-51, 265-353)		
		2,200	8.7-9.0 (124-128, 853-883)		

Injection Pump Adjustment (Cont'd)

Overflow volume	Item	Pump rpm	Overflow volume cc/min. (cu in./min.)		
	IPZand 1HZ	2,000	366-800 (22.3-48.8)		
	1HD-T	1,900	583-1,083 (35.6-66.1)		
Automatic timer	Item	Pump rpm	Piston stroke mm (in.)		
	1PZ	600	0.58 - 1.58 (0.0228 - 0.0622)		
		1,200	3.02 - 4.02 (0.1189 - 0.1583)		
		1,600	4.65-5.65 (0.1830-0.2224)		
		2,000	6.28-7.28 (0.2472-0.2866)		
		2,500	6.88-7.88 (0.2709-0.3102) (LST non-operational)		
	1HZ	600	0.43-1.43 (0.0169-0.0563)		
		1,200	3.23-4.23 (0.1272-0.1665)		
		1,600	5.09 - 6.09 (0.2004 - 0.2398)		
		2,000	6.88-7.88 (0.2709-0.3102)		
		2,500	6.88-7.88 (0.2709-0.3102) (LST non-operational)		
	1HD-T (Europe)	1,300	1.4-2.4 (0.055-0.094)		
		1,440	3.0-4.0 (0.118-0.157)		
		1,700	5.9-6.9 (0.232-0.272)		
		1,900	7.7 -8.7 (0.303-0.343)		
	1HD-T (Others)	800	1.05-2.05 (0.0413-0.0807)		
		1,440	4.9-5.9 (0.193-0.232)		
		1,700	6.42 - 7.42 (0.2528 - 0.2921)		
		1,900	7.7-8.7 (0.303-0.343)		
Full load injection volume	Item	Adjusting lever angle position	Pump rpm	No. of measuring strokes	Injection volume cc (cu in.)
	1PZ	Plus 21 -31°	1,200	200	11.78-12.18 (0.72-0.74)
	1HZ	Plus 21 -31°	1,200	200	11.80-12.20 (0.72-0.74)
	1HD-T (w/o BACS)	Plus 21 -31°	1,100	200	13.58-14.18 (0.83-0.87)
	1HD-T (w/ BACS)	Plus 21 -31°	1,100	200	13.14-13.74 (0.80-0.84)

Injection Pump Adjustment (Cont'd)

Maximum speed	Item	Adjusting lever angle	Pump rpm	No. of measuring strokes	Injection volume cc (cu in.)	
	1PZ	Plus 21 -31°	2,300	200	4.0-6.0 (0.24-0.37)	
			2,500	200	1.0 (0.06) or less	
	1HZ	Plus 21 -31°	2,300	200	3.0-5.0 (0.18-0.31)	
			2,550	200	1.0 (0.06) or less	
	1HD-T	Plus 21 -31°	2,200	200	3.0-5.0 (0.18-0.31)	
			2,350	200	1.0 (0.06) or less	
Injection volume	Item	Adjusting lever angle	Pump rpm	No. of measuring strokes	Injection volume cc (cu in.)	Variation limit cc (cu in.)
	1PZ	Plus 21 -31°	1,200	200	11.78-12.18 (0.72-0.74)	0.4 (0.02)
			100	200	9.60-14.40 (0.59-0.88)	1.2 (0.07)
			500	200	10.56-11.76 (0.64-0.72)	0.6 (0.04)
			2,000	200	11.62-12.82 (0.71 -0.78)	0.6 (0.04)
	1HZ	Plus 21 -31°	1,200	200	11.80-12.20 (0.72-0.74)	0.4 (0.02)
			100	200	9.60-14.40 (0.59-0.88)	1.2 (0.07)
			500	200	9.74-10.94 (0.59-0.67)	0.6 (0.04)
			2,000	200	10.96-12.16 (0.67-0.74)	0.6 (0.04)
	1HD-T (Europe)	Plus 21-31°	1,100	200	13.52-14.72 (0.83-0.90)	0.6 (0.04)
			100	200	11.60-16.40 (0.71 -1.00)	1.2 (0.07)
			500	200	8.32-9.12 (0.51 -0.56)	0.6 (0.04)
			1,800	200	13.58-14.18 (0.83-0.87)	1.2 (0.07)
	1HD-T (Others w/o BACS)	Plus 21 -31°	1,100	200	11.70-12.90 (0.71 -0.79)	0.6 (0.04)
			100	200	11.60-16.40 (0.71 -1.00)	1.2 (0.07)
			500	200	8.68-9.48 (0.53-0.58)	0.6 (0.04)
			1,800	200	13.58-14.18 (0.83-0.87)	1.2 (0.07)

Injection Pump Adjustment (Cont'd)

Injection volume (cont'd)	Item	Adjusting lever angle	Pump rpm	No. of measuring strokes	Injection volume cc (cu in.)	Variation limit cc (cu in.)
	1HD-T (Others w/ BACS)	Plus 21-31°	1,100	200	11.70-12.90 (0.71 -0.79)	0.6 (0.04)
			100	200	11.60-16.40 (0.71 -1.00)	1.2 (0.07)
			500	200	8.20-9.20 (0.50-0.56)	0.6 (0.04)
			1,800	200	13.14 – 14.74 (0.80 – 0.84)	1.2 (0.07)

Governor sleeve plug head thickness		
IPZand 1HZ	3.0 mm	0.118 in.
	3.1 mm	0.122 in.
	3.2 mm	0.126 in.
	3.3 mm	0.130 in.
	3.4 mm	0.134 in.
	3.5 mm	0.138 in.
	3.6 mm	0.142 in.
	3.7 mm	0.146 in.
	3.8 mm	0.150 in.
	3.9 mm	0.154 in.
	4.0 mm	0.158 in.
	4.1 mm	0.161 in.
	4.2 mm	0.165 in.
1HD-T	3.0 mm	0.118 in.
	3.1 mm	0.122 in.
	3.2 mm	0.1 26 in.
	3.3 mm	0.130 in.
	3.4 mm	0.134 in.
	3.5 mm	0.138 in.
	3.6 mm	0.142 in.
	3.7 mm	0.146 in.
	3.8 mm	0.150 in.
	3.9 mm	0.154 in.
	4.0 mm	0.158 in.
	4.1 mm	0.161 in.
	4.2 mm	0.165 in.
	4.3 mm	0.169 in.
	4.4 mm	0.173 in.
	4.5 mm	0.177 in.
	4.6 mm	0.181 in.
	4.7 mm	0.185 in.
	4.8 mm	0.189 in.
	4.9 mm	0.193 in.
	5.0 mm	0.197 in.
	5.1 mm	0.201 in.
	5.2 mm	0.205 in.
	5.3 mm	0.209 in.
	5.4 mm	0.213 in.
	5.5 mm	0.216 in.
	5.6 mm	0.220 in.
	5.7 mm	0.224 in.
	5.8 mm	0.228 in.

Injection Pump Adjustment (Cont'd)

Injection volume (cont'd)	Governor sleeve plug head thickness 1HD-T (cont'd)	5.9 mm 0.232 in. 6.0 mm 0.236 in. 6.1 mm 0.240 in. 6.2 mm 0.244 in. 6.3 mm 0.248 in. 6.4 mm 0.252 in. 6.5 mm 0.256 in. 6.6 mm 0.260 in.

	Item	Pump rpm	No. of measuring stroke	Injection volume cc (cu in.)
Full-load minimum injection volume (1HD-T only)	(Europe)	500	200	8.32-9.12 (0.51 -0.56)
	(Others) (w/o BACS)	500	200	8.68-9.48 (0.53-0.58)
	(Others) (w/ BACS)	500	200	7.54-8.34 (0.46-0.51)

	Item	Pump rpm	Boost	No. of measuring stroke	Injection volume cc (cu in.)
Boost compensator characteristic (1HD-T only)	(Europe)	1,100	0.48 (6.8, 47)	200	12.44-13.44 (0.76-0.82)
	(Others) (w/o BACS)	1,100	0.54 (7.7, 53)	200	10.86-11.86 (0.66-0.72)
	(Others) (w/ BACS)	500	0.50 (7.1,49)	200	8.20-9.20 (0.50-0.56)

	Item	Pump rpm	Pressure kg/cm^2 (psi, kPa)	No. of measuring stroke	Injection volume cc (cu in.)	Hysterises cc (cu in.)
Boost compensator characteristic tendency (1HD-T only)	(Europe)	1,100	0.81 (11.5, 79)	200	13.52-14.72 (0.82-0.90)	–
		1,100	0.48 (6.8, 47)	200	12.44-13.44 (0.76-0.82)	–
		1,100	0.27 (3.8, 26)	200	10.50-11.70 (0.64-0.71)	0.3 (0.02) or less
		1,100	0 (0, 0)	200	9.70-11.10 (0.59-0.68)	–
	(Others) (w/o BACS)	1,100	0.81 (11.5, 79)	200	11.70-12.90 (0.71 -0.79)	–
		1,100	0.54 (7.7, 53)	200	10.86-11.86 (0.66-0.72)	–
		1,100	0.41 (5.8, 40)	200	9.48-10.68 (0.58-0.65)	0.3 (0.02) or less
		1,100	0 (0, 0)	200	8.62-10.02 (0.453-0.61)	–
	(Others) (w/ BACS)	1,100	1.29 (18.3, 127)	200	11.70-12.90 (0.71 -0.79)	–
		500	0.81 (11.5, 79)	200	9.80-11.00 (0.60-0.67)	0.3 (0.02) or less
		500	0.50 (7.1, 49)	200	8.20-9.20 (0.50-0.56)	–
		500	0 (0, 0)	200	7.54-8.34 (0.46-0.51)	–

Injection Pump Adjustment (Cont'd)

Load sensing timer (w/o HAC only)	Item	Pump rpm	No. of measuring strokes	Injection volume cc (cu in.)	Remark
	1PZ	1,600	200	Measured value at step (f) minus 1.4 (0.09) ± 0.3 (0.02)	Set to starting point
	1HZ	1,600	200	Measured value at step (f) minus 1.4 (0.09) ± 0.3 (0.02)	
	1HD-T (Europe)	1,800	200	Measured value at step (f) minus 1.6 (0.10) ± 0.6 (0.04)	
	1HD-T (Others)	1,800	200	Measured value at step (f) minus 1.2 (0.07) ± 0.2 (0.01)	
	1PZ	1,600	200	9.08-9.88 (0.55-0.60)	Check ending point
	1HZ	1,600	200	8.2 (0.50) or more	
	Item	Pump rpm		Timer piston fluctuation mm (in.)	
	1PZ	1,600		2.19 - 3.1 9 (0.0862 - 0.1 256)	
	1HZ	1,600		2.73 - 3.73 (0.1075 - 0.1 469)	
	1HD-T (Europe)	1,440		0.70 - 1.70 (0.0276 - 0.0670)	
	1HD-T (Others)	1,440		1.96 - 2.96 (0.0772 - 0.1165)	

Idle speed	Item	Adjusting lever angle	Pump rpm	No. of measuring strokes	Injection volume cc (cu in.)	Variation limit cc (cu in.)
	1PZ	Minus 12-22°	325	200	q = 2.94-3.94 (0.18-0.24)	0.4 (0.02)
			300	200	More than q plus 0.5 (0.03)	–
			400	200	q minus 1.2 - 2.2 (0.07-0.13)	–
	1HZ (M/T)	Minus 12-22°	375	200	q = 2.30-3.30 (0.14-0.20)	0.4 (0.02)
			350	200	More than q plus 0.5 (0.03)	–
			450	200	q minus 1.2-2.2 (0.07-0.13)	–
			325	200	2.60-3.60 (0.16-0.22)	0.4 (0.02)
	1HZ(A/T)	Minus 12-22°	375	200	q = 2.30-3.30 (0.07-0.20)	0.4 (0.02)
			350	200	More than q plus 0.5 (0.03)	–
			450	200	q minus 1.2 - 2.2 (0.07-0.13)	–
			375	200	1.64-2.64 (0.10-0.16)	0.4 (0.02)

Injection Pump Adjustment (Cont'd)

Idle speed (cont'd)	Item	Adjusting lever angle	Pump rpm	No. of measuring strokes	Injection volume cc (cu in.)	Variation limit cc (cu in.)
	1HD-T (Europe M/T)	Full position	400	200	9.32-11.72 (0.57-0.72)	–
		Minus 12-22°	325	200	q = 3.70-4.70 (0.23-0.29)	0.4 (0.02)
			300	200	More than q plus 0.5 (0.03)	–
	1HD-T (Europe A/T)	Full position	400	200	10.30-12.70 (0.63-0.77)	–
		Minus 12-22°	325	200	q = 2.84-3.84 (0.17-0.23)	0.4 (0.02)
			300	200	More than q plus 0.5 (0.03)	–
	1HD-T (Others M/T)	Full position	400	200	9.20-11.60 (0.56-0.71)	–
		Minus 12-22°	325	200	q = 3.70-4.70 (0.23-0.29)	0.4 (0.02)
			300	200	More than q plus 0.5 (0.03)	–
	1HD-T (Others A/T)	Full position	400	200	10.18-12.58 (0.62-0.77)	–
		Minus 12-22°	325	200	q = 2.84-3.84 (0.17-0.23)	0.4 (0.02)
			300	200	More than q plus 0.5 (0.03)	–
Dash pot	Item	Pump rpm	No. of measuring stroke		Injection volume cc (cu in.)	Remark
	1HZ	700	200		q = 0.5-0.9 (0.03-0.05)	Lever set
		700	200		q Plus 0.2-0.3 (0.01 -0.02)	Adjust
	1HD-T	400	200		q = 0.1 -0.3 (0.01 -0.02)	Lever set
		400	200		q Plus 0.2-0.3 (0.01 -0.02)	Adjust
Fast idle (w/ ACSD)	IPZand 1HZ at fuel temperature 15°C (59°F) at fuel temperature 30°C (86°F) 1HD-T at fuel temperature 15°C (59°F) at fuel temperature 40°C (104°F)				1.3 mm 0.051 in. 0 mm 0 in. 1.6 mm 0.063 in. 0 mm 0 in.	
Adjusting lever	Lever moving angle				38 - 48°	

Torque Specifications

Part tightened	kg-cm	ft-lb	N-m
Nozzle holder body * Nozzle holder retaining nut (IPZand 1HZ)	375	27	37
Injection nozzle x Cylinder head (IPZand 1HZ)	650	47	64
Nozzle leakage pipe * Injection nozzle (IPZand 1HZ)	300	22	29
Injection pipe x Injection nozzle (IPZand 1HZ)	150	11	15
Injection pipe x Injection pump (IPZand 1HZ)	150	11	15
Nozzle holder body * Nozzle holder retaining nut (1HD-T)	350	25	34
Injection nozzle x Cylinder head (1HD-T)	400	29	39
Nozzle leakage pipe x Injection nozzle (1HD-T)	125	9	12
Injection pipe x Injection nozzle (1HD-T)	250	18	25
Injection pipe x Injection pump (1HD-T)	250	18	25
Fuel inlet hollow screw x Injection pump body	375	27	37
Regulator valve x Injection pump body	90	78 in.-lb	8.8
Feed pump cover x Injection pump body	25	25 in.-lb	2.5
Distributive head x Injection pump body	120	9	12
Governor link support bolt	140	10	14
Delivery valve holder x Distributive head (IPZand 1HZ)	500	36	49
(1HD-T)	550	40	54
Distributive head plug x Distributive head (IPZand 1HZ)	700	51	69
(1HD-T)	900	65	88
Governor cover x Injection pump body	85	74 in.-lb	8.3
Fuel cut solenoid x Distributive head	225	16	22
Pickup sensor x Injection pump body	210	15	21
Fuel inlet pipe x Injection pump	230	17	23
Fuel outlet pipe x Injection pump	230	17	23
Injection pump x Timing gear case	185	13	18
Pump stay x Injection pump	700	51	69
Injection pump drive gear x Injection pump	1,000	72	98
Distributive head plug bolt	170	12	17

COOLING SYSTEM

Specifications

Engine coolant capacity		See page A-2
Radiator cap	Relief valve opening pressure STD	0.75-1.05 kg/cm^2 (10.7-14.9 psi, 74-103 kPa)
	Limit	0.6 kg/cm^2 (8.5 psi, 59 kPa)
Thermostat	Valve opening temperature	74-78°C 187-194T
	Valve lift at 90°C (194°F)	10 mm (0.39 in.) or more

Torque Specifications

Part tightened	kg-cm	ft-lb	Nm
Cylinder block x Drain plug	250	18	25
Water pump x Cylinder block	200	14	20
Alternator adjusting bar (water pump) x Cylinder block	400	29	39
Water pump pulley x Pulley seat	200	14	20
Water inlet x Water inlet housing	200	14	20

LUBRICATION SYSTEM

Specifications

Engine oil capacity			See page A-2	
Oil pressure		at idling	0.3 kg/cm^2 (4.3 psi, 29 kPa) or more	
		at 3,000 rpm	2.5 kg/cm^2 (36 psi, 245 kPa) or more	
Oil pump	Body clearance	STD	0.10 - 0.1 7 mm	0.0039 - 0.0067 in.
		Limit	0.20 mm	0.0079 in.
	Side clearance	STD	0.03 - 0.09 mm	0.0012 - 0.0035 in.
		Limit	0.15 mm	0.0059 in.
	Tip clearance	STD	0.08 - 0.16 mm	0.0031 - 0.0063 in.
		Limit	0.21 mm	0.0083 in.

Torque specifications

Part tightened	kg-cm	ft-lb	Nm
Engine oil drain plug	250	18	25
Relief valve plug x Timing gear case	425	31	42
Oil pump (timing gear case) x Cylinder block	200	14	20
Oil pump (timing gear case) x Injection pump	185	13	18
Oil strainer x Cylinder Block	90	78 in.-lb	8.8
Oil pan x Cylinder block (timing gear case, rear oil seal retainer)	100	7	10
Engine drain cock x Oil cooler cover	200	14	20
Check valve x Oil cooler cover	275	20	27
Oil cooler cover x Cylinder block	200	14	20
Oil dipstick guide x Intake manifold	200	14	20
Oil dipstick guide x Oil cooler cover	200	14	20
Oil nozzle check valve x Cylinder block	275	20	27

STARTING SYSTEM

Pre-heating system	Light lighting time		
	Supper glow type		See pages ST-3, 4
	Fixed delay type		
	HZJ and HDJ ex. (Europe and Australia)		Approx. 5 seconds
	PZJ, HZJ75, HZB and HDB		
	ex. (Europe and Australia)	12 V type	Approx. 6 seconds
		24 V type	Approx. 5 seconds
	Water temp, sensor resistance		
	at-2O°C (-4°F)		10 - 20 kfi
	at 0°C (32°F)		4 - 7 kO
	at 20°C (68°F)		2 - 3 kfl
	at40°C (104°F)		0.9 - 1.3 kQ
	at 60°C (140°F)		0.4-0.7 kfi
	at 80°C (176°F)		0.2-0.4 *kQ*
Starter	Rated voltage and output power		12 V 2.5 kW, 24 V 4.5 kW
	No-load characteristic		
	Current 12 V type		180 A or less at 11.0 V
	24 V type		90 A or less at 23.0 V
	rpm		3,500 rpm or more
	Commutator Outer diameter	STD	36.0 mm 1.417 in.
		Limit	35.0 mm 1.378 in.
	Undercut depth	STD	0.7-0.9 mm 0.028 - 0.035 in
		Limit	0.2 mm 0.008 in.
	Circle runout	Limit	0.05 mm 0.0020 in.
	Brush Length	STD	20.5-21.0 mm 0.807-0.827 in.
		Limit	13.0 mm 0.512 in.
	Spring installed load		3.2-4.0 kg (7.1 -8.8 Ib, 31 -39 N)

CHARGING SYSTEM

Drive belt deflection and tension			See page A-2
Battery specific gravity	when fully charge at 20°C (68°F)		
	95D31R and 95D31 L		1.25-1.27
	ex. (95D31R and 95D31 L)		1.27-1.29
Alternator	Rated output		12 V 45 A, 12 V 55 A, 12 V 60 A, 12 V 80 A, 12 V 100 A, 24 V 30A, 24 V 55 A
	Rotor coil resistance	12V type	2.7-3.1 *Q*
		24 V type	1,0-1,4 SI
	Slip ring diameter	STD	14.2-14.4 mm 0.559 - 0.567 in.
		Limit	12.8 mm 0.504 in.
	Brush exposed length	STD	10.5 mm 0.413 in.
		Limit	1.5 mm 0.059 in.
Alternator regulator	Regulating voltage		
	12 V type	at 25°C (77°F)	14.0-15.0 V
		at115°C (239°F)	13.5-14.3 V
	24 V type	at 25°C (77°F)	27.7-28.7 V
		at115°C (239°F)	26.0-28.7 V

STANDARD BOLT TORQUE SPECIFICATIONS

Page

STANDARD BOLT TORQUE SPECIFICATIONS. B-2

STANDARD BOLT TORQUE SPECIFICATIONS

HOW TO DETERMINE BOLT STRENGTH

	Mark	Class		Mark	Class
Hexagon head bolt	Bolt head No. 4 — 4T 5 — 5T 6 — 6T 7 — 7T 8 — 8T 9 — 9T 10 — 10T 11 — 11T		Stud bolt	No mark	4T
	No mark	4T		Grooved	6T
Hexagon flange bolt w/ washer hexagon bolt	No mark	4T			
Hexagon head bolt	Two protruding lines	5T			
Hexagon flange bolt w/ washer hexagon bolt	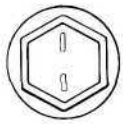 Two protruding lines	6T	Welded bolt	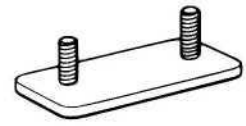	4T
Hexagon head bolt	Three protruding lines	7T			
Hexagon head bolt	Four protruding lines	8T			

SPECIFIED TORQUE FOR STANDARD BOLTS

Class	Diameter mm	Pitch mm	Specified torque					
			Hexagon head bolt			Hexagon flange bolt		
			kg-cm	ft-lb	N-m	kg-cm	ft-lb	N-m
4T	6	1	55	48 in.-lb	5	60	52 in.-lb	6
	8	1.25	130	9	12.5	145	10	14
	10	1.25	260	19	26	290	21	29
	12	1.25	480	35	47	540	39	53
	14	1.5	760	55	74	850	61	84
	16	1.5	1,150	83	115	—	—	—
5T	6	1	65	56 in.-lb	6.5	75	65 in.-lb	7.5
	8	1.25	160	12	15.5	175	13	17.5
	10	1.25	330	24	32	360	26	36
	12	1.25	600	43	59	670	48	65
	14	1.5	930	67	91	1,050	76	100
	16	1.5	1,400	101	140	—	—	—
6T	6	1	80	69 in.-lb	8	90	78 in.-lb	9
	8	1.25	195	14	19	210	15	21
	10	1.25	400	29	39	440	32	44
	12	1.25	730	53	71	810	59	80
	14	1.5	1,100	80	110	1,250	90	125
	16	1.5	1,750	127	170	—	—	—
7T	6	1	110	8	10.5	120	9	12
	8	1.25	260	19	25	290	21	28
	10	1.25	530	38	52	590	43	58
	12	1.25	970	70	95	1,050	76	105
	14	1.5	1,500	108	145	1,700	123	165
	16	1.5	2,300	166	230	—	—	—
8T	8	1.25	300	22	29	330	24	33
	10	1.25	620	45	61	690	50	68
	12	1.25	1,100	80	110	1,250	90	120
9T	8	1.25	340	25	34	380	27	37
	10	1.25	710	51	70	790	57	78
	12	1.25	1,300	94	125	1,450	105	140
10T	8	1.25	390	28	38	430	31	42
	10	1.25	800	58	78	890	64	88
	12	1.25	1,450	105	140	1,600	116	155
11T	8	1.25	430	31	42	480	35	47
	10	1.25	890	64	87	990	72	97
	12	1.25	1,600	116	155	1,800	130	175

SSTAND SSM

Page
SST (SPECIAL SERVICE TOOLS).....C-2
SSM (SPECIAL SERVICE MATERIALS).....C-6

SST (SPECIAL SERVICE TOOLS)

Section / Part Name / Part No. / Illustration			EM	TC	FU	CO	LU	ST	CH	Note
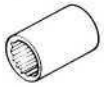	09011-38121	1 2 mm Socket Wrench for 1 2 Pointed Head	●							
	09032-00100	Oil Pan Seal Cutter					●			
	09201-60011	Valve Guide Bushing Remover & Replacer	●							
	09202-43013	Valve Spring Compressor	●							
	09208-48010	Combustion Chamber Remover	●							IPZand 1HZ
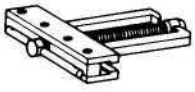	**09213-36020**	Timing Gear Remover	●							
	09213-58011	Crankshaft Pulley Holding Tool	●							
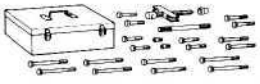	09213-60017	Crankshaft Pulley & Gear Puller Set	●		●					
	(09213-00020)	(Body with Bolt)	●		*●					Injection pump
	(09213-00030)	(Handle)	●		*●					Injection pump
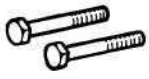	**(09213-00060)**	(Bolt Set)	●		*●					Injection pump
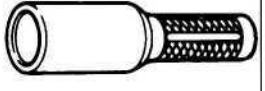	**09214-60010**	Crankshaft Pulley & Gear Replacer	●							
	09214-76011	Crankshaft **Pulley Replacer**	●							Pump drive gear oil seal
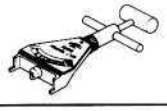	**09216-00020**	**Belt** Tension **Gauge**							●	

SST (SPECIAL SERVICE TOOLS) (Cont'd)

Section / Part Name / Part No. / Illustration			EM	TC	FU	CO	LU	ST	CH	Note
	09216-00030	**Belt Tension Gauge Cable**							●	
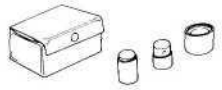	09222-17010	Connecting Rod Bushing Remover & Replacer	●							
	(09222-05020)	(Remover & Replacer)	●							1HD-T
	(09222-05030)	(Guide)	●							1HD-T
	(09222-05040)	(Base)	●							1HD-T
	09222-66010	**Connecting Rod Bushing Remover & Replacer**	●							1PZ and 1HZ
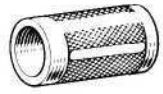	**09223-00010**	Cover & Seal Replacer	●							Timing gear
	09223-46011	**Crankshaft Front Oil Seal Replacer**	●							Camshaft retainer oil seal
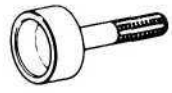	**09223-56010**	**Crankshaft Rear Oil Seal Replacer**	●							
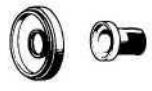	**09223-78010**	**Crankshaft Oil Seal Replacer**	●							
	09228-10001	Oil Filter Wrench					●			
	09228-64010	**Fuel Filter Wrench**			●					
	09236-00101	**Water Pump Overhaul Tool Set**			●					
	(09237-00070)	**(Shaft** "C")			●					Governor sleeve plug

SST (SPECIAL SERVICE TOOLS) (Cont'd)

Section / Part Name / Part No. / Illustration			EM	TC	FU	CO	LU	ST	CH	Note
	09241-76022	**Injection Pump Stand Set**			●					
	09245-54010	**Injection Pump Stand Arm**			●					
	09248-64011	Valve Clearance Adjusting Tool	●							
	09260-54012	Injection Pump Tool **Set**			●					
	(09262-54010)	(Distributor Head Plug \ \ Wrench /			●					
	(09262-54020)	(Regulator Valve \ \ Wrench j			●					
	(09269-54020)	(Socket 14 mm)			●					
	(09269-54030)	(Tweezers)			●					
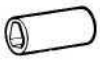	**(09269-54040)**	(Governor Lever \ \ Support Bolt Wrench /			●					
	09268-17010	2 Spring Nozzle Tool Set			●					1HD-T
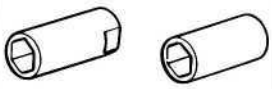	**09268-64010**	Injection Nozzle Wrench Set	●		●					1PZ and 1HZ
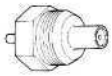	0927517010	Pre-stroke Mearing Adapter			●					1HZ and 1HD-T
	(09751-19004)	(O-Ring)			●					1HZ and 1HD-T
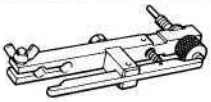	09275-54011	Plunger Stroke Measuring Tool	●							

SST (SPECIAL SERVICE TOOLS) (Cont'd)

Section / Part Name / Part No. / Illustration			EM	TC	FU	CO	LU	ST	CH	Note
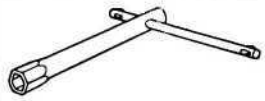	**09275-54020**	**Maximum Speed Adjusting Screw Lock Nut Wrench**	●							w/ HAC and 1HD-T
	09285-76010	Injection Pump Camshaft Bearing Cone Replacer						*1 ●	*2 ●	*1 Starter front bearing *2 Rotor rear bearing
	09286-46011	Injection Pump Spline Shaft Puller						*1 ●	*2 ●	*1 Starter bearing *2 Rectifier end frame
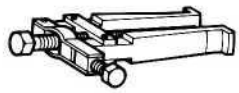	**09308-10010**	**Oil Seal Puller**	●							
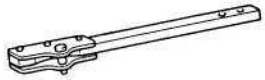	**09330-00021**	Companion Flange Holding Tool	*1*2 ●		*3 ●					*1 Crankshaft pulley *2 Pump drive gear *3 Injection pump
	09608-20012	Front Hub & Drive Pinion Bearing Tool Set							●	
	(09608-00030)	(Replacer)							●	Rotor front bearing
	0971720010	Brake Shoe Return Spring Remover	●							Timing belt tension spring
	09718-20010	Brake Shoe Return Spring Replacer	●							Timing belt tension spring
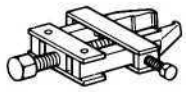	**09820-00021**	**Alternator Rear Bearing Puller**							●	
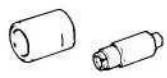	**09820-63010**	Alternator Pulley Set Nut Wrench Set							●	
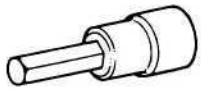	**09923-00020**	Hexago 8 mm Wrench	●							
	09950-20017	Universal Puller	●							
	09992-00024	Cylinder Compression Check Gauge Set	●							

SST (SPECIAL SERVICE TOOLS) (Cont'd)

Section / Part Name / Part No. / Illustration			EM	TC	FU	CO	LU	ST	CH	Note
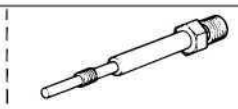	(09992-00160)	(No. 5 Attachment)	●							
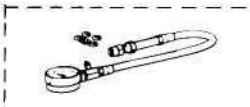	(09992-00211)	(Gauge Assy)	●							
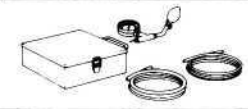	09992-00241	Turbocharger Pressure Gauge		●	●					

SSM (SPECIAL SERVICE MATERIALS)

Part Name	Part No.	Sec.	Use etc.
Seal packing or equivalent	08826-00080	EM	Harf circular plug Camshaft oil seal retainer Cylinder head cover Main bearing cap Rear oil seal retainer Timing belt cover Timing gear cover
		LU	Oil pump (Timing gear case) Oil Pan
Adhesive 1324, Three bond 1324 or equivalent	08833-00070	LU	Engine drain cock Screw plug (Oil pump)

HOW TO USE THIS MANUAL

To assist you in finding your way through the manual, the Section Title and major heading are given at the top of every page.

An **INDEX** is provided on the first page of each section to guide you to the item to be repaired.

At the beginning of each section, **PRECAUTIONS** are given that pertain to *all* repair operations contained in that section. *Read these precautions before starting any repair task.*

TROUBLESHOOTING tables are included for each system to help you diagnose the problem and find the cause. The repair for each possible cause is referenced in the remedy column to quickly lead you to the solution.

REPAIR PROCEDURES

Most repair operations begin with an overview illustration. It identifies the components and shows how the parts fit together.

Example:

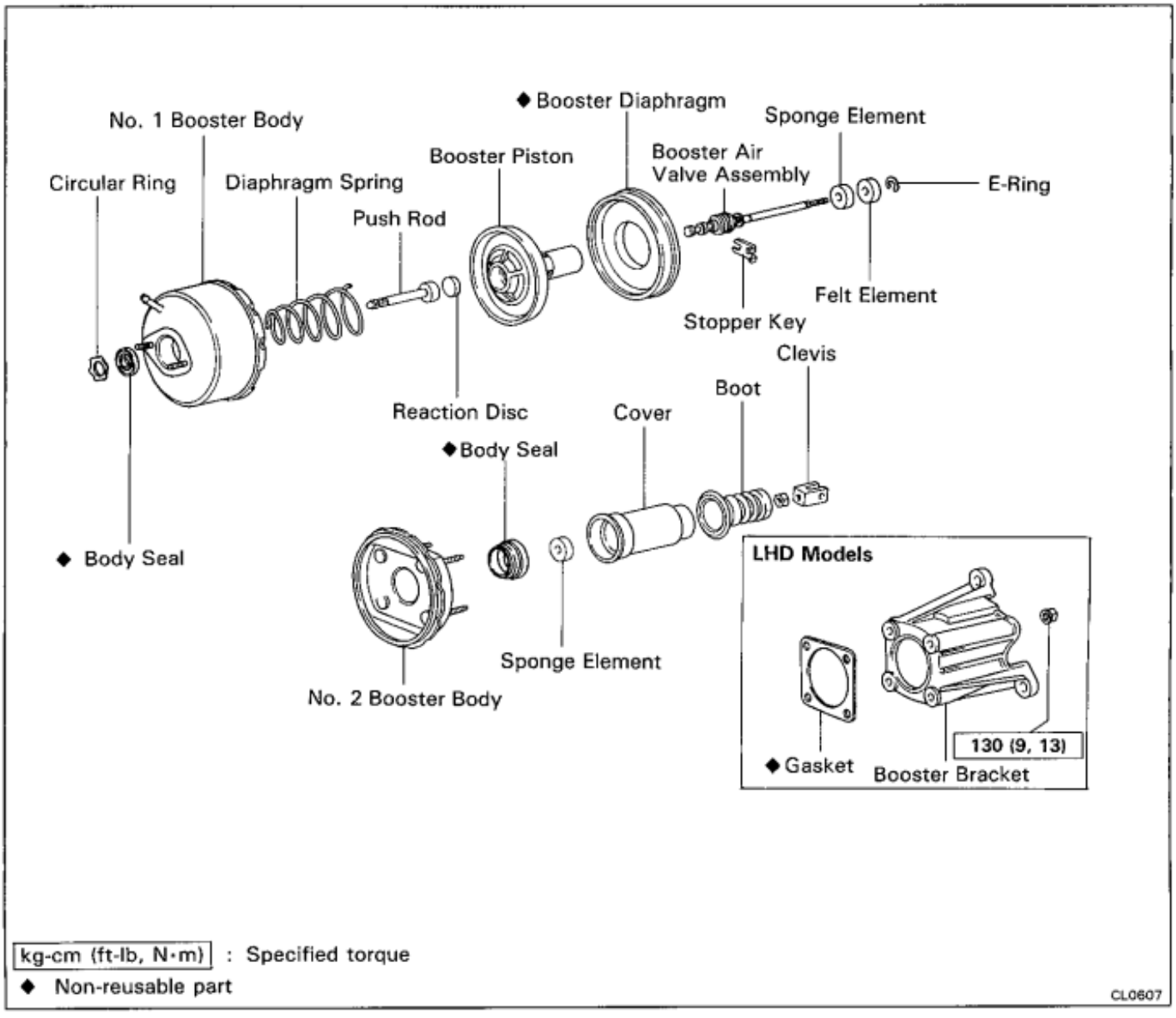

kg-cm (ft-lb, N·m) : Specified torque

◆ Non-reusable part

CL0607

The procedures are presented in a step-by-step format:

- The illustration shows *what* to do and *where* to do it.
- The task heading tells *what* to do.
- The detailed text tells *how* to perform the task and gives other information such as specifications and warnings.

Example:

Illustration: what to do and where

Task heading : what to do

21. CHECK PISTON STROKE OF OVERDRIVE BRAKE

(a) Place SST and a dial indicator onto the overdrive brake piston as shown in the figure.

SST 09350-30020 (09350-06120)

Set part No. *Component part No.*

Detailed text: how to do task

(b) Measure the stroke applying and releasing the compressed air (4 — 8 kg/cm^2, 57 — 114 psi or 392 — 785 kPa) as shown in the figure.

Piston stroke: 1.40 — 1.70 mm (0.0551 — 0.0669 in.)

Specification

This format provides the experienced technician with a FAST TRACK to the information needed. The upper case task heading can be read at a glance when necessary, and the text below it provides detailed information. Important specifications and warnings always stand out in bold type.

REFERENCES

References have been kept to a minimum. However, when they are required you are given the page to refer to.

SPECIFICATIONS

Specifications are presented in bold type throughout the text where needed. You never have to leave the procedure to look up your specifications. They are also found in Appendix A, for quick reference.

CAUTIONS, NOTICES, HINTS:

- CAUTIONS are presented in bold type, and indicate there is a possibility of injury to you or other people.
- NOTICES are also presented in bold type, and indicate the possibility of damage to the components being repaired.
- HINTS are separated from the text but do not appear in bold. They provide additional information to help you efficiently perform the repair.

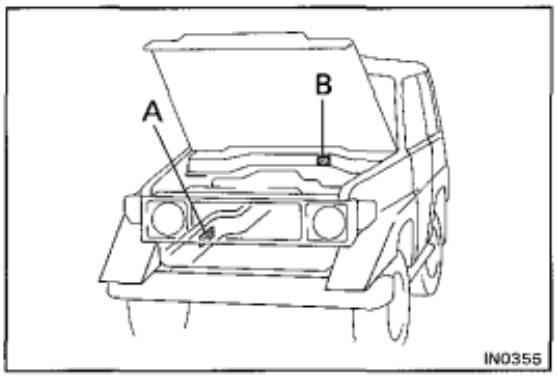

IDENTIFICATION INFORMATION

VEHICLE IDENTIFICATION NUMBER

The vehicle identification number is stamped on the outer surface of the front right side frame. This number is also stamped on the manufacturer's name plate.

A: Vehicle Identification Number
B: Manufacturer's Name Plate

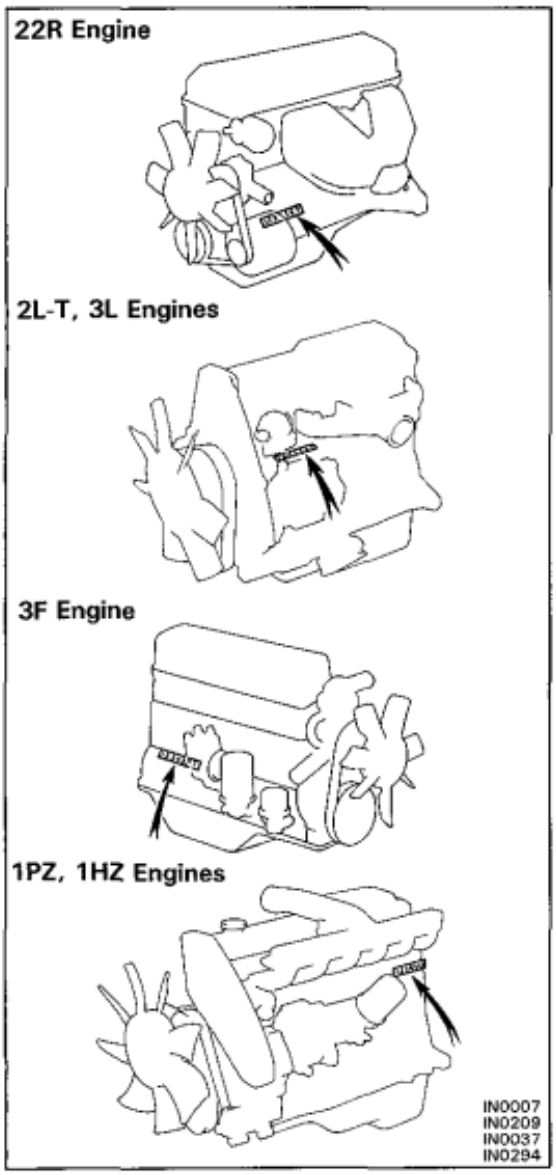

ENGINE SERIAL NUMBER

The engine serial number is stamped on the cylinder block, as shown.

GENERAL REPAIR INSTRUCTIONS

1. Use, fender seat and floor covers to keep the vehicle clean and prevent damage.
2. During disassembly, keep parts in the appropriate order to facilitate reassembly.
3. Observe the following:
   (a) Before performing electrical work, disconnect the negative cable from the battery terminal.
   (b) If it is necessary to disconnect the battery for inspection or repair, always disconnect the cable from the negative (−) terminal which is grounded to the vehicle body.
   (c) To prevent damage to the battery terminal post, loosen the terminal nut and raise the cable straight *up without twisting or prying it.*
   (d) Clean the battery terminal posts and cable terminals with a shop rag. Do not scrape them with a file or other abrasive object.
   (e) Install the cable terminal to the battery post with the nut loose, and tighten the nut after installation. Do not use a hammer to tap the terminal onto the post.
   (f) Be sure the cover for the positive (+) terminal is properly in place.
4. Check hose and wiring connectors to make sure that they are secure and correct.

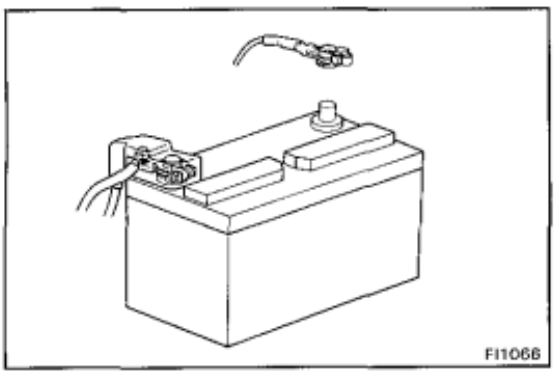

5. Non-reusable parts
   (a) Always replace cotter pins, gaskets, O-rings and oil seals etc. with new ones.
   (b) Non-reusable parts are indicated in the component illustrations by the "◆" symbol.

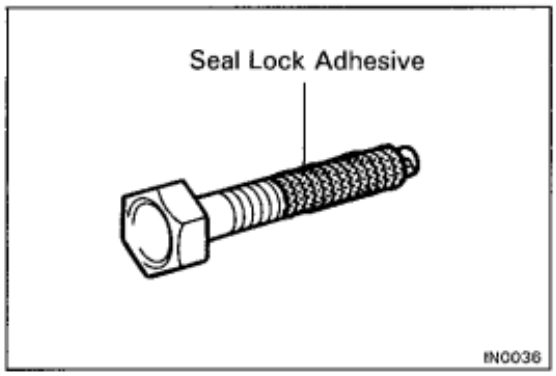

6. Precoated parts

   Precoated parts are bolts and nuts, etc. that are coated with a seal lock adhesive at the factory.
   (a) If a precoated part is tightened, loosened or caused to move in any way, it must be recoated with the specified adhesive.
   (b) Recoating of precoated parts
      (1) Clean off the old adhesive from the bolt, nut or threads.
      (2) Dry with compressed air.
      (3) Apply the specified seal lock adhesive to the bolt or nut threads.
   (c) Precoated parts are indicated in the component illustrations by the "★" symbol.
7. When necessary, use a sealer on gaskets to prevent leaks.
8. Carefully observe all specifications for bolt tightening torques. Always use a torque wrench.
9. Use of special service tools (SST) and special service materials (SSM) may be required, depending on the nature of the repair. Be sure to use SST and SSM where specified and follow the proper work procedure. A list of SST and SSM can be found at the back of this manual.

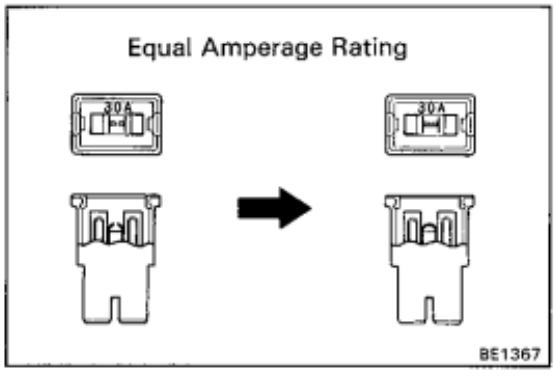

10. When replacing fuses, be sure the new fuse has the correct amperage rating. DO NOT exceed the rating or use one with a lower rating.
11. Care must be taken when jacking up and supporting the vehicle. Be sure to lift and support the vehicle at the proper locations (See page IN-8).
    (a) If the vehicle is to be jacked up only at the front or rear end, be sure to block the wheels at the opposite end in order to ensure safety.
    (b) After the vehicle is jacked up, be sure to support it on stands. It is extremely dangerous to do any work on a vehicle raised on a jack alone, even for a small job that can be finished quickly.

12. Observe the following precautions to avoid damage to the parts:
    (a) **Do not open the cover or case of the ECU unless absolutely necessary.**
    (If the IC terminals are touched, the IC may be destroyed by static electricity.)
    (b) To pull apart electrical connectors, pull on the connector itself, not the wires.

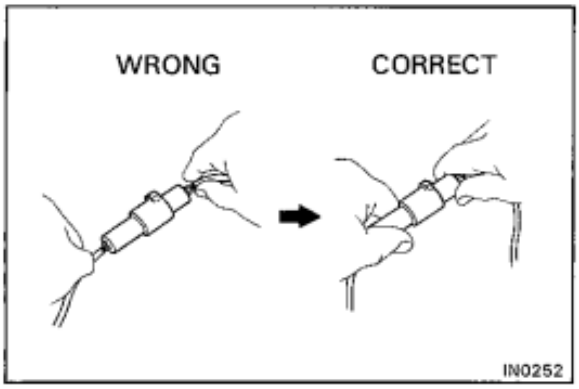

    (c) Be careful not to drop electrical components, such as sensors or relays. If they are dropped on a hard floor, they should be replaced and not reused.
    (d) When checking continuity at the wire connector, insert the tester probe carefully to prevent terminals from bending.
    (e) To disconnect vacuum hoses, pull on the end, not the middle of the hose.
    (f) When steam cleaning an engine, protect the distributor, coil, air filter and VCV from water.
    (g) Never use an impact wrench to remove or install temperature switches or temperature sensors.
    (h) When using a vacuum gauge, never force the hose onto a connector that is too large. Use a step-down adapter instead. Once the hose has been stretched, it may leak.

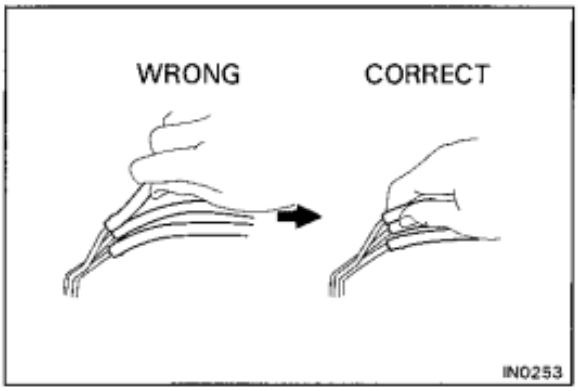

13. Tag hoses before disconnecting them:
    (a) When disconnecting vacuum houses, use tags to identify how they should be reconnected.
    (b) After completing a job, double check that the vacuum hoses are properly connected. A label under the hood shows the proper layout.

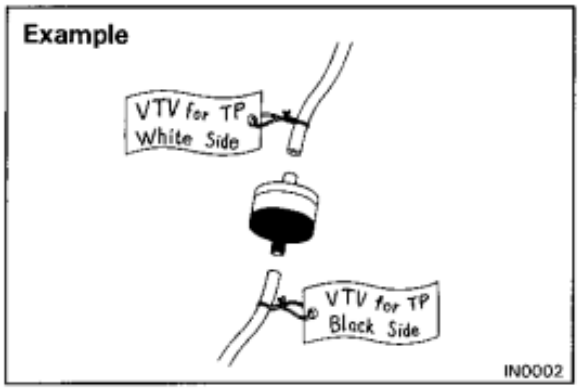

PRECAUTIONS FOR VEHICLES EQUIPPED WITH A CATALYTIC CONVERTER

CAUTION: If large amounts of unburned gasoline flow into the converter, it may overheat and create a fire hazard. To prevent this, observe the following precautions and explain them to your customer.

1. **Use only unleaded gasoline.**
2. **Avoid prolonged idling.**

   Avoid running the engine at idle speed for more than 20 minutes.
3. **Avoid spark jump test.**

   (a) Spark jump test only when absolutely necessary. Perform this test as rapidly as possible.

   (b) While testing, never race the engine.
4. **Avoid prolonged engine compression measurement.**

   Engine compression tests must be made as rapidly as possible.
5. **Do not run engine when fuel tank is nearly empty.**

   This may cause the engine to misfire and create an extra load on the converter.
6. **Avoid coasting with ignition turned off and prolonged braking.**
7. **Do not dispose of used catalyst along with parts contaminated with gasoline or oil.**

VEHICLE LIFT AND SUPPORT LOCATIONS

Coil Spring Type (LJ and RJ series)

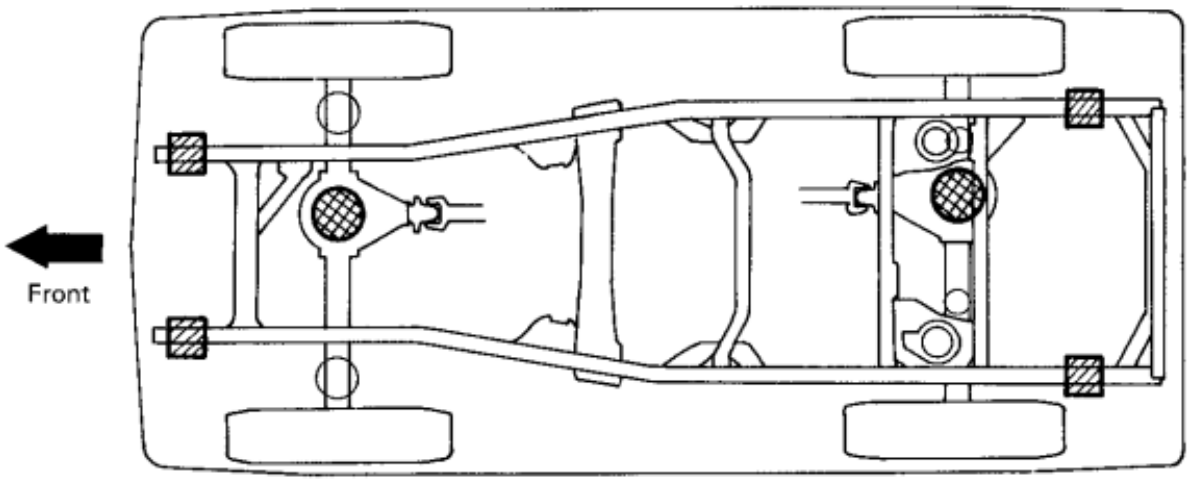

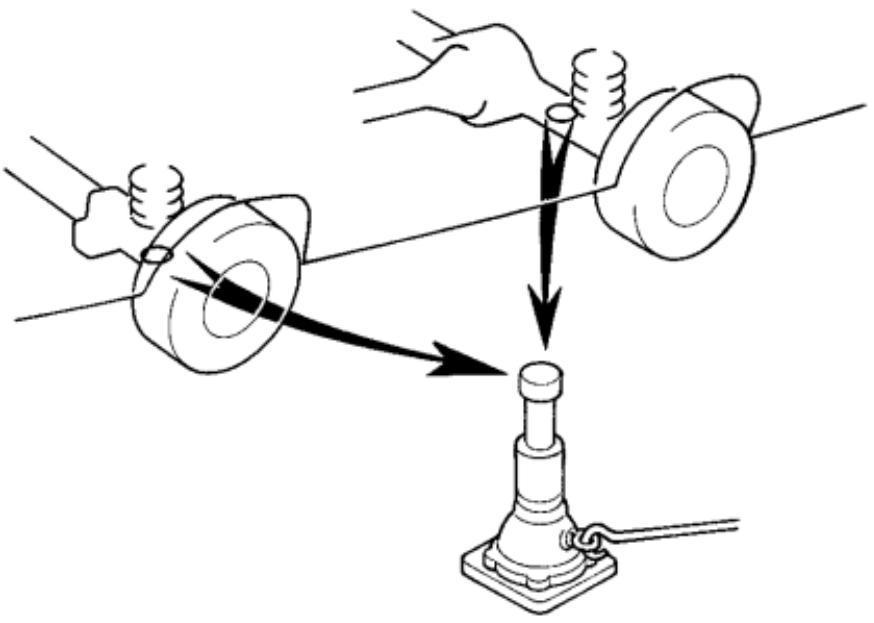

JACK POSITION

Front .....Under the front differential
Rear .....Under the rear differential

SUPPORT POSITION

Safety stand.....

SCREW TYPE JACK POSITION .....

IN0040
IN0352

VEHICLE LIFT AND SUPPORT LOCATIONS (Cont'd)

Leaf Spring Type (PZJ, HZJ and FJ series)

70 series (short) and 73 series (middle)

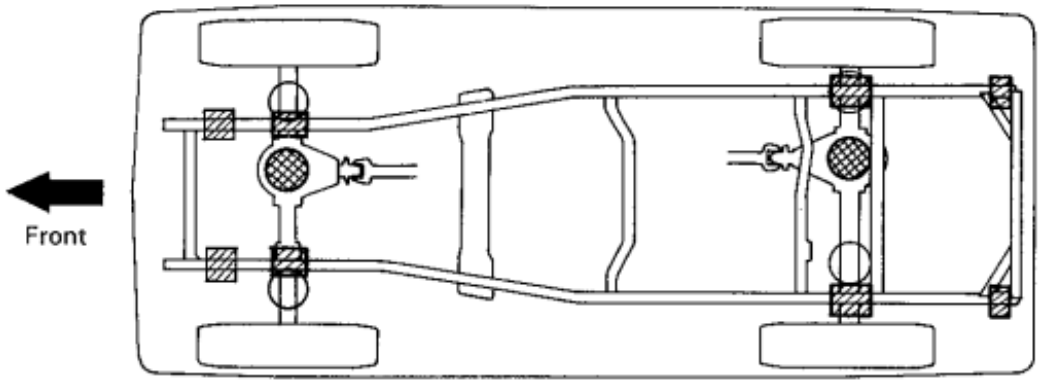

75 series (long)

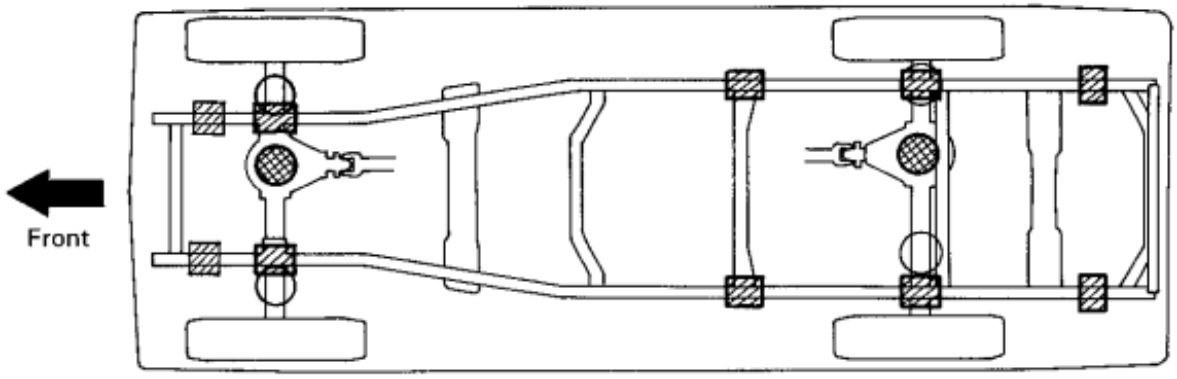

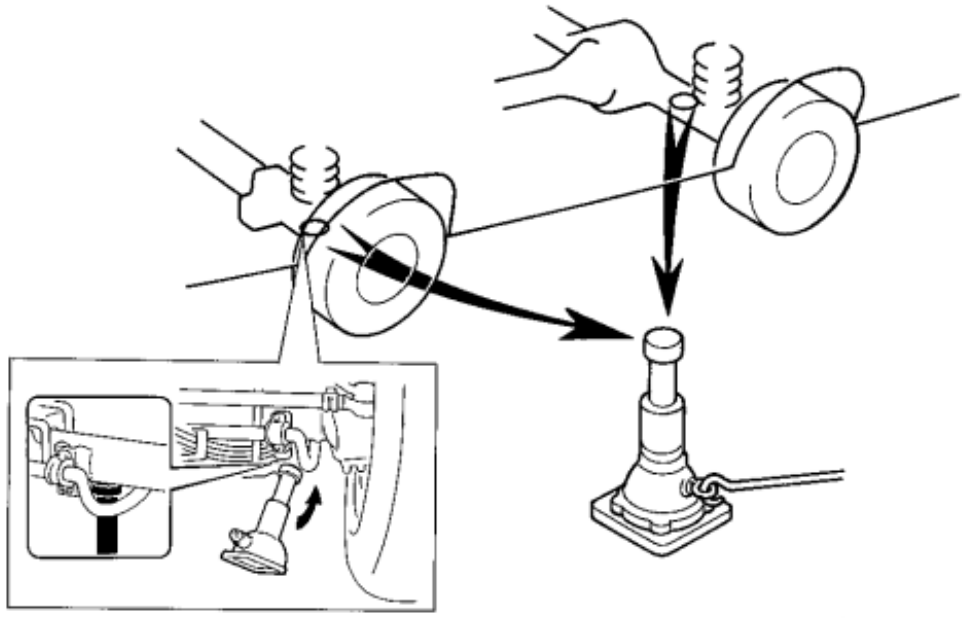

JACK POSITION

Front .....Under the front differential
Rear .....Under the rear differential

SUPPORT POSITION

Safety stand.....

SCREW TYPE JACK POSITION .....

IN0043
IN0044
IN0352 IN0346

ABBREVIATIONS USED IN THIS MANUAL

A/C	Air Conditioner
Approx.	Approximately
A/T	Automatic Transmission
ATF	Automatic Transmission Fluid
A.T.P.	Automatic Transmission Parking
B_O	Overdrive Brake
B_2	Second Brake
B_3	First and Reverse Brake
C_O	Overdrive Direct Clutch
C_1	Front Clutch
C_2	Rear Clutch
CB	Circuit Breaker
ECU	Electronic Control Unit
Ex.	Except
F_O	Overdrive One-Way Clutch
F_2	No.2 One-Way Clutch
Fr	Front
IG	Ignition
LH	Left-Hand
LHD	Left-Hand Drive
LSPV	Load Sensing Proportioning Valve
Max.	Maximum
Min.	Minimum
MP	Multipurpose
M/T	Manual Transmission
OD, O/D	Overdrive
PS	Power Steering
PTO	Power Take-Off
RH	Right-Hand
RHD	Right-Hand Drive
Rr	Rear
SSM	Special Service Materials
SST	Special Service Tools
STD	Standard
SW	Switch
Temp.	Temperature
VSV	Vacuum Switching Valve
w/	With
w/o	Without
2WD	Two Wheel Drive Vehicles (4×2)
4WD	Four Wheel Drive Vehicles (4×4)

TROUBLESHOOTING

Problem	Possible cause	Remedy	Page
Hard to shift or will not shift	Clutch pedal freeplay excessive	Adjust pedal freeplay	CL-3
	Clutch booster faulty	Inspect clutch booster	CL-10
	Clutch release cylinder faulty	Repair release cylinder	CL-21
	Clutch master cylinder faulty	Repair master cylinder	CL-6, 8
	Clutch disc out of true, lining greasy or broken	Inspect clutch disc	CL-22
	Splines on input shaft or clutch disc dirty or burred	Repair as necessary	CL-22
	Clutch pressure plate faulty	Replace pressure plate	CL-22
Transmission jumps out of gear	Pilot bearing worn	Replace pilot bearing	CL-22
Clutch slips	Clutch pedal freeplay insufficient	Adjust pedal freeplay	CL-3
	Clutch booster faulty	Inspect clutch booster	CL-10
	Clutch disc lining oily or worn out	Inspect clutch disc	CL-22
	Pressure plate faulty	Replace pressure plate	CL-22
	Release fork binds	Inspect release fork	CL-22
Clutch grabs/chatters	Clutch booster faulty	Inspect clutch booster	CL-10
	Clutch disc lining oily or worn out	Inspect clutch disc	CL-22
	Pressure plate faulty	Replace pressure plate	CL-22
	Clutch diaphragm spring bending	Align clutch diaphragm	CL-22
	Engine mounts loose	Repair as necessary	
Clutch pedal spongy	Air in clutch lines	Bleed clutch system	CL-5
	Clutch release cylinder faulty	Repair release cylinder	CL-21
	Clutch master cylinder faulty	Repair master cylinder	CL-6, 8
Clutch noisy	Loose part inside housing	Repair as necessary	
	Release bearing worn or dirty	Replace release bearing	CL-22
	Pilot bearing worn	Replace pilot bearing	CL-22
	Release fork or linkage sticks	Repair as necessary	

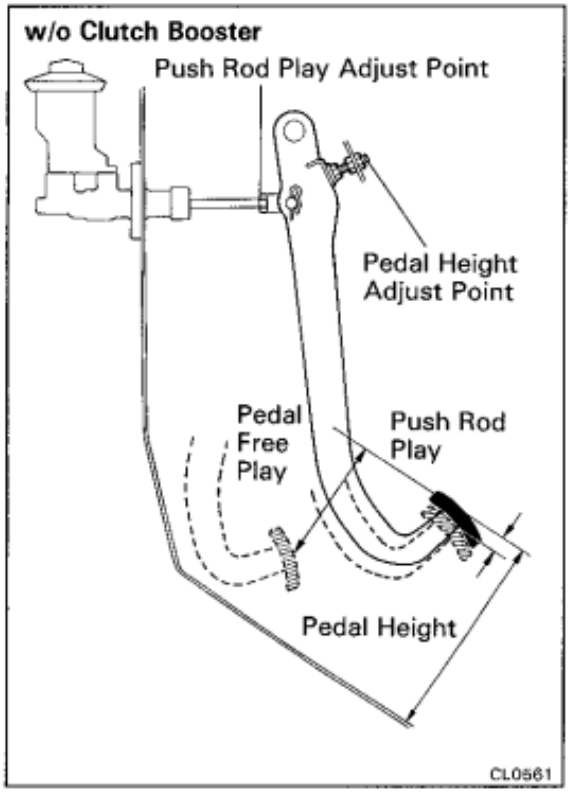

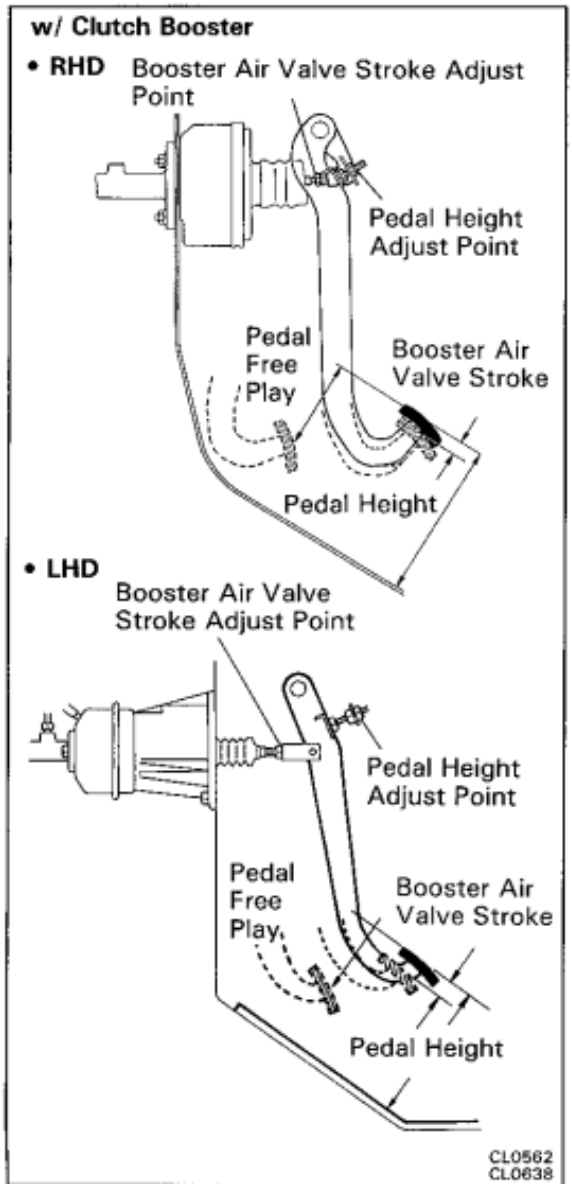

CHECK AND ADJUSTMENT OF CLUTCH PEDAL

1. CHECK THAT PEDAL HEIGHT IS CORRECT

Pedal height from dash panel: 181 mm (7.13 in.)

2. IF NECESSARY, ADJUST PEDAL HEIGHT

Loosen the lock nut and turn the stopper bolt until the height is correct. Tighten the lock nut.

HINT: After adjusting the pedal height, check and adjust the pedal free play and push rod play or booster air valve stroke.

3-1. (w/o Clutch Booster)
CHECK THAT PEDAL FREEPLAY AND PUSH ROD PLAY ARE CORRECT

(Pedal Freeplay)

Push in on the pedal until the beginning of clutch resistance is felt.

Pedal freeplay: 13.0 — 23.0 mm (0.51 — 0.91 in.)

(Push rod play)

Push in on the pedal with a finger softly until the resistance begins to increase a little.

Push rod play at pedal top: 1.0 — 5.0 mm (0.039 — 0.197 in.)

3-2. (w/ Clutch Booster)
CHECK PEDAL FREEPLAY AND BOOSTER AIR VALVE STROKE

(Pedal Freeplay)

Push in on the pedal until the clutch begins to resist.

Pedal freeplay: 15.0 — 30.0 mm (0.59 — 1.18 in.)

(Booster Air Valve Stroke)

(a) Stop the engine and depress the clutch pedal several times until there is no vacuum left in the clutch booster.

(b) Push in on the pedal with a finger softly until the resistance begins to increase a little.

Booster air valve stroke at pedal top: 5.0 — 9.0 mm (0.20 — 0.35 in.)

HINT: The booster air valve stroke is the amount of the stroke until the booster piston is moved by the booster air valve.

4. IF NECESSARY, ADJUST PEDAL FREEPLAY AND PUSH ROD PLAY OR BOOSTER AIR VALVE STROKE

(a) Loosen the lock nut and turn the push rod until the freeplay and push rod play are correct.

(b) Tighten the lock nut.

(c) After adjusting the pedal freeplay, check the pedal height.

(d) Connect the air duct and install the lower finish panel.

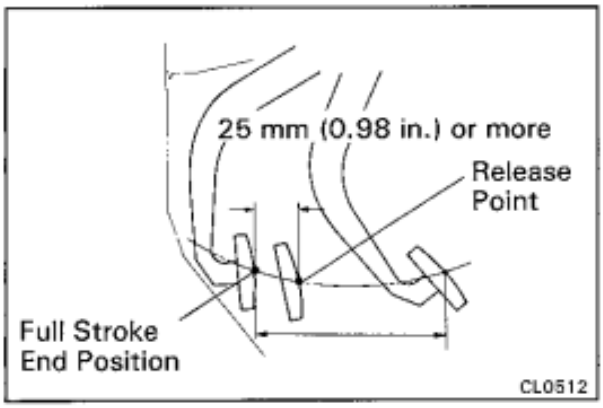

5. INSPECT CLUTCH RELEASE POINT

(a) Pull the parking brake lever and install wheel stopper.

(b) Start the engine and idle the engine.

(c) Without depressing the clutch pedal, slowly shift lever into reverse position until the gears contact.

(d) Gradually depress the clutch pedal and measure the stroke distance from the point the gear noise stops (release point) up to the full stroke end position.

Standard distance: 25 mm (0.98 in.) or more (From pedal stroke end position to release position to release point)

If the distance not as specified, perform the following operation.

- Inspect pedal height.
- Inspect push rod play and pedal freeplay.
- Bleed the clutch line.
- Inspect the clutch cover and disc.

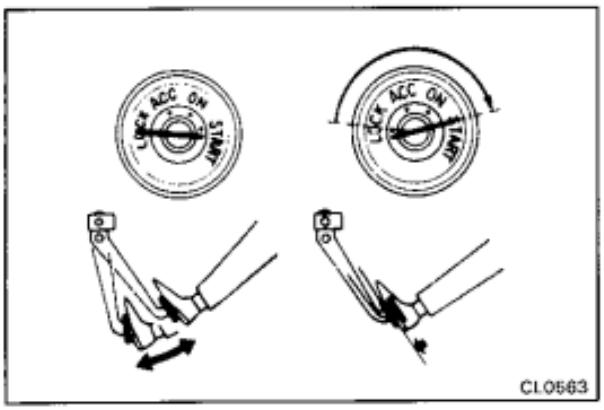

OPERATIONAL TEST OF CLUTCH BOOSTER

HINT: If there is leakage or lack of vacuum, repair before testing.

1. OPERATING CHECK

With the engine stopped, depress the clutch pedal several times. Then, with the pedal at the mid point, start the engine and confirm that the pedal sinks down slightly.

2. AIR-TIGHTNESS CHECK

(a) Depress the clutch pedal several times with the engine stopped. Then, start the engine and depress the clutch pedal and check that there is a light difference in pedal effort.

(b) Start the engine and turn it off after is sufficient vacuum in the booster. Depress the clutch pedal and confirm that the effort required for at least one time is equal to that with the engine running.

HINT: If (a) and (b) are not as stipulates, inspect the vacuum check valve and, if necessary, the clutch booster also.

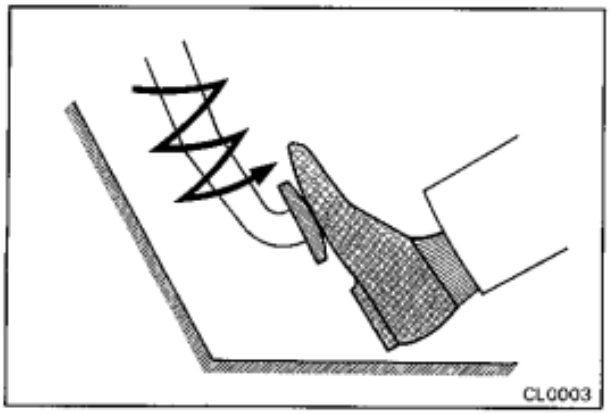
CL0003

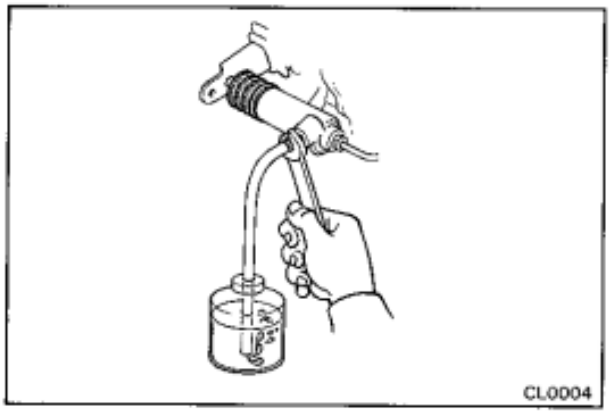
CL0004

BLEEDING OF CLUTCH SYSTEM

HINT: If any work is done on the clutch system or if air is suspected in the clutch lines, bleed the system of air.

NOTICE: Do not let brake fluid remain on a painted surface. Wash it off immediately.

1. **FILL CLUTCH RESERVOIR WITH BRAKE FLUID**

   Check the reservoir frequently. Add fluid if necessary.

2. **CONNECT VINYL TUBE TO BLEEDER PLUG**

   Insert the other end of the tube in a half-full container of brake fluid.

3. **BLEED CLUTCH LINE**

   (a) Slowly pump the clutch pedal several times.

   (b) While pressing on the pedal, loosen the bleeder plug until the fluid starts to run out. Then close the bleeder plug.

   (c) Repeat this procedure until there are no more air bubbles in the fluid.

   Torque: 110 kg-cm (8 ft-lb, 11 N·m)

4. **TIGHTEN BLEEDER PLUG**

CLUTCH MASTER CYLINDER (w/o Clutch Booster)

COMPONENTS

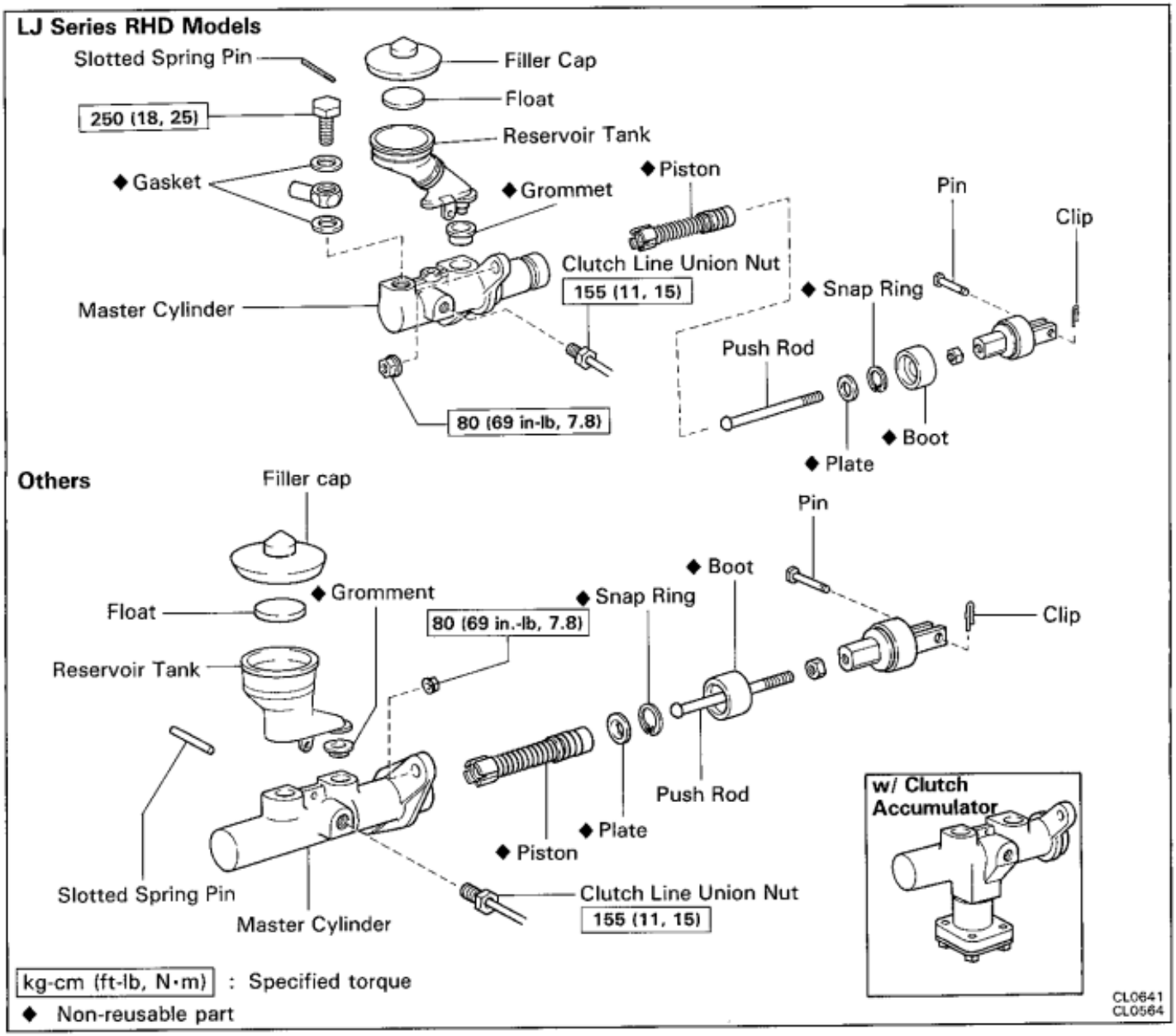

REMOVAL AND INSTALLATION OF CLUTCH MASTER CYLINDER

(MAIN POINT OF REMOVAL AND INSTALLATION)

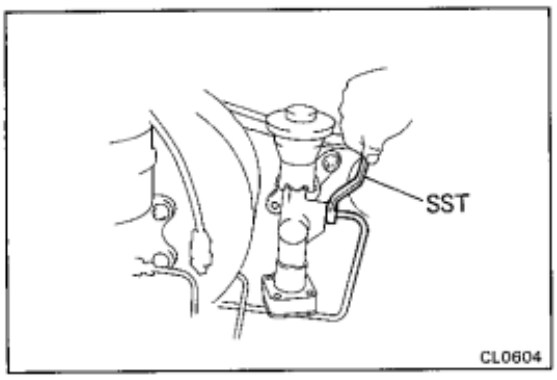

REMOVE MASTER CYLINDER

(a) Draw out fluid with syringe.

(b) Using SST, disconnect the clutch tube.

SST 09751-36011

(c) Remove the clip, clevis pin and return spring.

(d) Remove the nut from the room side.

(e) Remove the nut from the engine room side.

(f) Pull out the master cylinder.

DISASSEMBLY OF MASTER CYLINDER

1. **REMOVE RESERVOIR TANK**
   (a) Using a pin punch and a hammer, drive out the slotted spring pin.
   (b) Remove reservoir tank and grommet.
2. **REMOVE PUSH ROD AND PISTON**

INSPECTION OF MASTER CYLINDER

HINT: Clean the disassembled parts with compressed air.

1. **INSPECT MASTER CYLINDER BORE FOR SCORING OR CORROSION**
   If a problem is found, clean or replace the cylinder.
2. **INSPECT PISTON AND CUPS FOR WEAR, SCORING, CRACKS OR SWELLING**
   If either one requires replacement, use the parts from the cylinder kit.
3. **INSPECT PUSH ROD FOR WEAR OR DAMAGE**
   If necessary, replace the push rod.

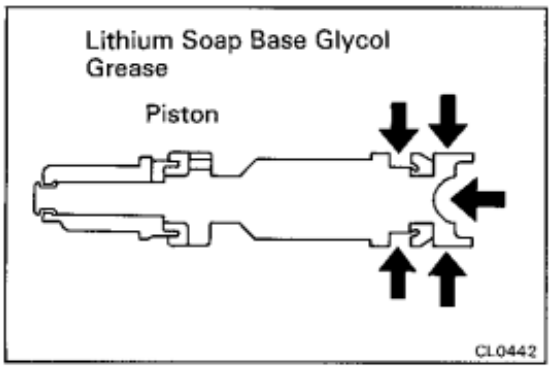

ASSEMBLY OF MASTER CYLINDER

1. **COAT PARTS WITH LITHIUM SOAP BASE GLYCOL GREASE AS SHOWN**
2. **INSERT PISTON INTO CYLINDER**
3. **INSTALL PUSH ROD ASSEMBLY WITH SNAP RING**

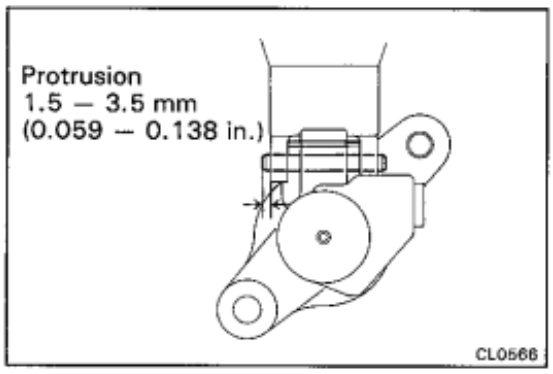

4. **INSTALL RESERVOIR TANK**
   (a) Install reservoir tank and new grommet.
   (b) Using a pin punch and a hammer, drive in the slotted spring pin.

INSTALLATION OF MASTER CYLINDER

(See page CL-6)

1. **INSTALL MASTER CYLINDER**
   Install the mounting nut, and torque them.
   Torque: 80 kg-cm (69 in.-lb, 7.8 N·m)
2. **CONNECT CLUTCH LINE UNION**
   Using SST, connect the union.
   SST 09751-36011
3. **CONNECT PUSH ROD AND INSTALL PIN**
   Install the clip in the push rod pin.
4. **BLEED SYSTEM AND ADJUST CLUTCH PEDAL**
   (See page CL-5)

(w/ Clutch Booster)

COMPONENTS

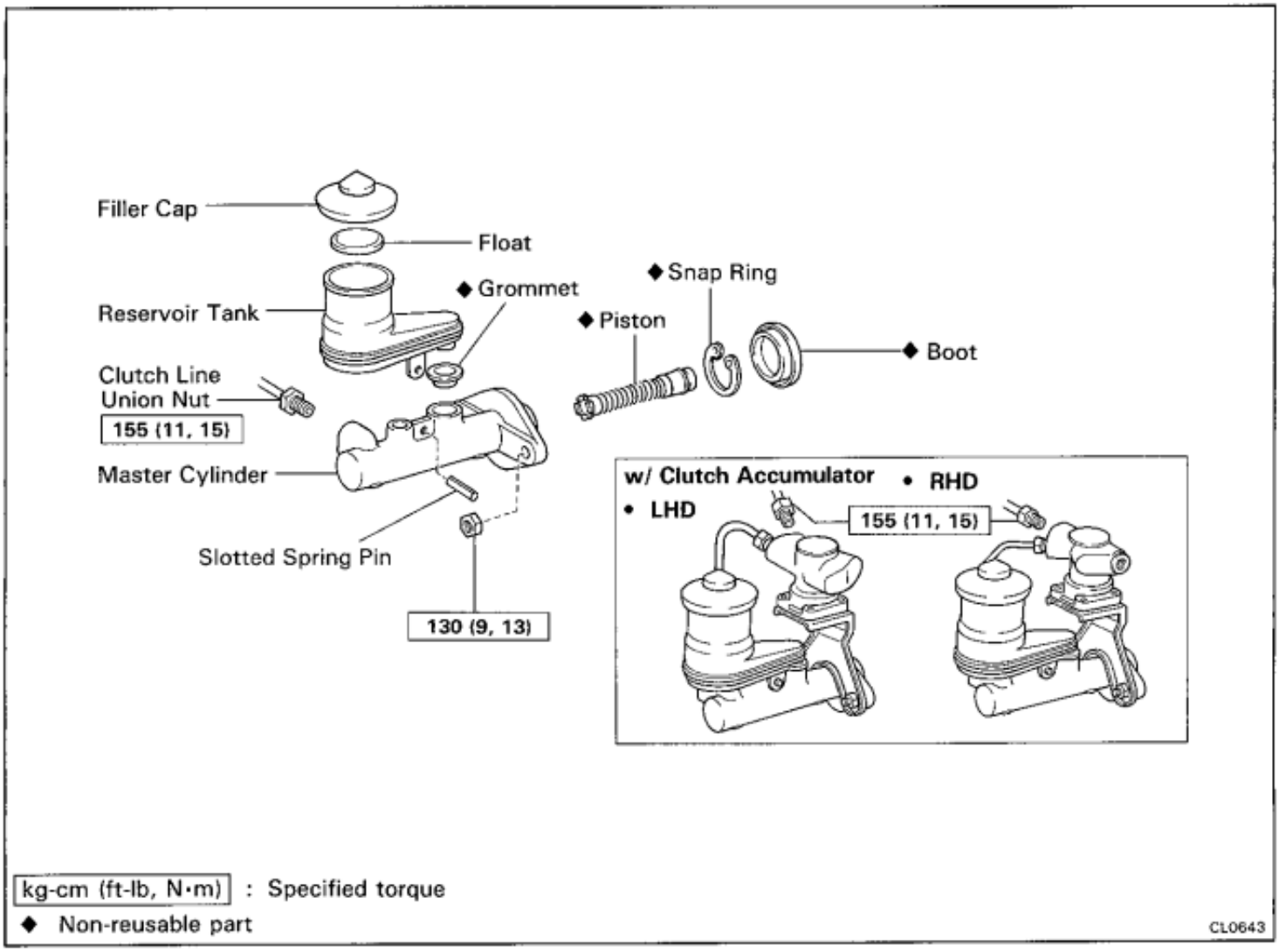

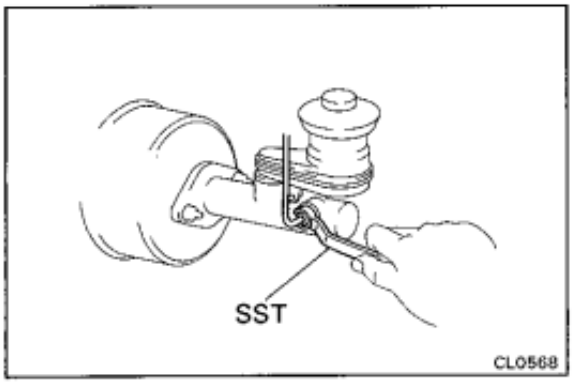

REMOVAL AND INSTALLATION OF CLUTCH MASTER CYLINDER

(MAIN POINT OF REMOVAL AND INSTALLATION)

REMOVE MASTER CYLINDER

(a) Draw out fluid with syringe.

(b) Using SST, disconnect the clutch tube.

SST 09751-36011

(c) (LHD Models)
Remove two nuts.

(RHD Models)
Remove three nuts.

(d) Pull out the master cylinder.

DISASSEMBLY OF MASTER CYLINDER

1. **REMOVE RESERVOIR TANK**
   (a) Using a pin punch and a hammer, drive out the slotted spring pin.
   (b) Remove reservoir tank and grommet.
2. **REMOVE PISTON**

INSPECTION OF MASTER CYLINDER

HINT: Clean the disassembled parts with compressed air.

1. **INSPECT MASTER CYLINDER BORE FOR SCORING OR CORROSION**
   If a problem is found, clean or replace the cylinder.
2. **INSPECT PISTON AND CUPS FOR WEAR, SCORING, CRACKS OR SWELLING**
   If either one requires replacement, use the parts from the cylinder kit.

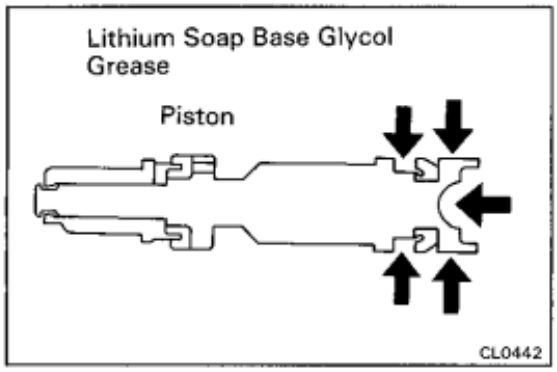

ASSEMBLY OF MASTER CYLINDER

1. **COAT PARTS WITH LITHIUM SOAP BASE GLYCOL GREASE AS SHOWN**
2. **INSTALL PISTON INTO CYLINDER**

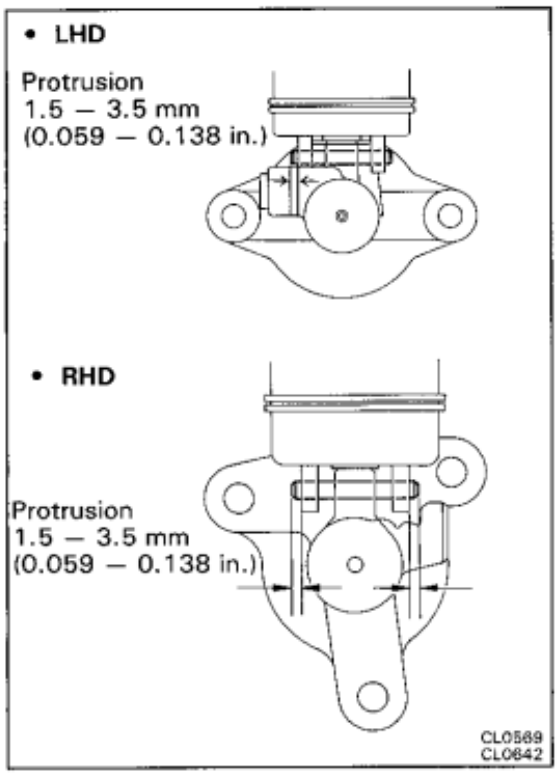

3. **INSTALL RESERVOIR TANK**
   (a) Install reservoir tank and new grommet.
   (b) Using a pin punch and a hammer, drive in the slotted spring pin.

INSTALLATION OF MASTER CYLINDER

(See page CL-8)

1. **ADJUST LENGTH OF CLUTCH BOOSTER PUSH ROD**
   (See step 1 on page CL-16)
2. **INSTALL MASTER CYLINDER WITH MOUNTING NUTS**
   Torque: 130 kg-cm (9 ft-lb, 13 N·m)
3. **CONNECT CLUTCH LINE UNION**
   Using SST, connect the union.
   SST 09751-36011
4. **BLEED SYSTEM AND ADJUST CLUTCH PEDAL**
   (See page CL-5)

CLUTCH BOOSTER

REMOVAL OF CLUTCH BOOSTER

- **LHD Models**

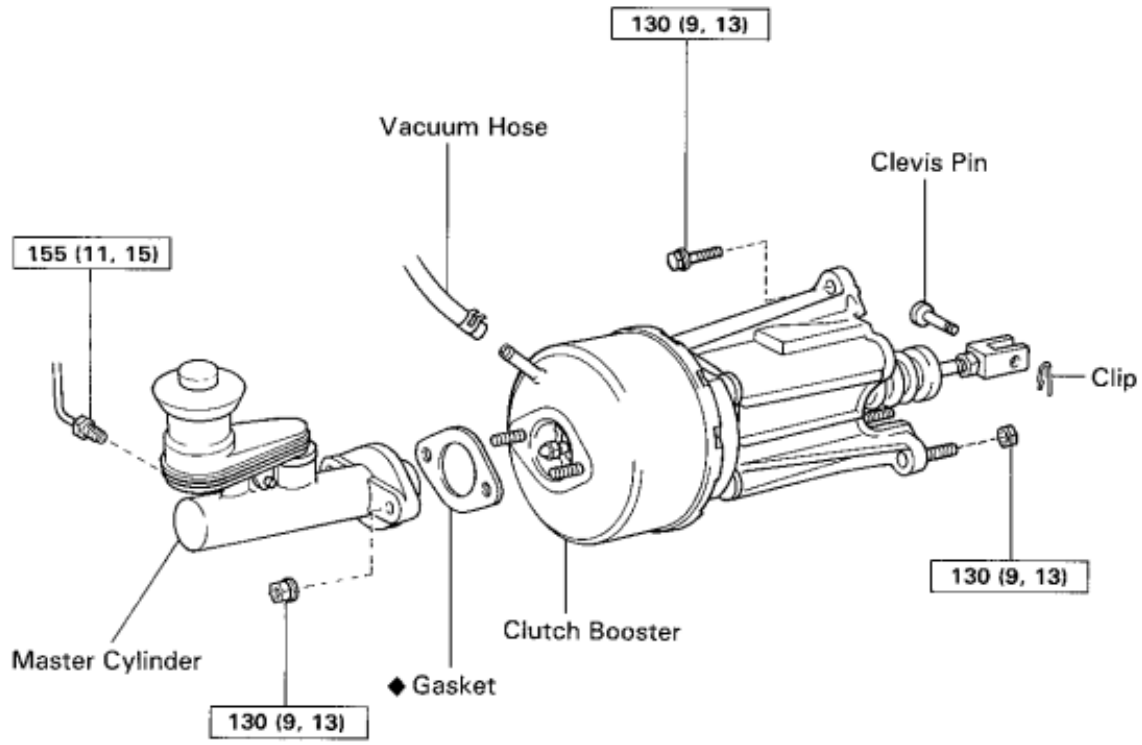

- **RHD Models**

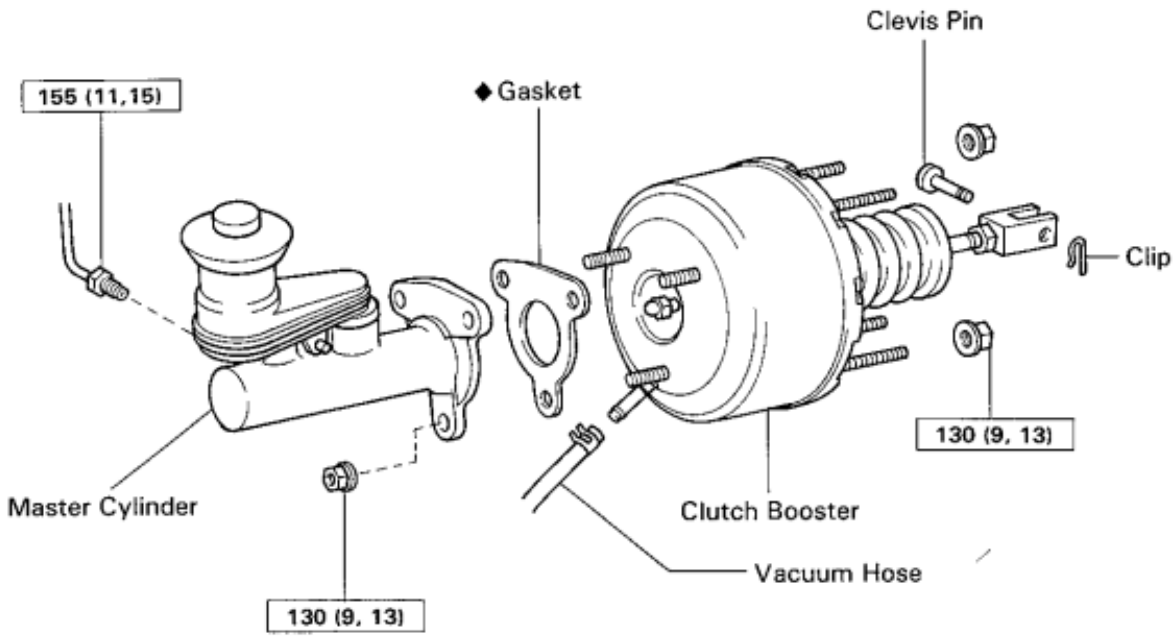

kg-cm (ft-lb, N·m) : Specified torque

◆ Non-reusable part

CL0605
CL0635

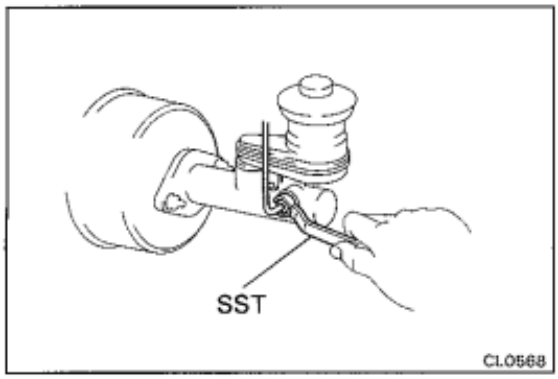

1. **REMOVE MASTER CYLINDER**
   (See page CL-8)

2. **DISCONNECT VACUUM HOSE FROM CLUTCH BOOSTER**

3. **REMOVE CLUTCH PIPE AND VACUUM PIPE CLAMP BOLTS**

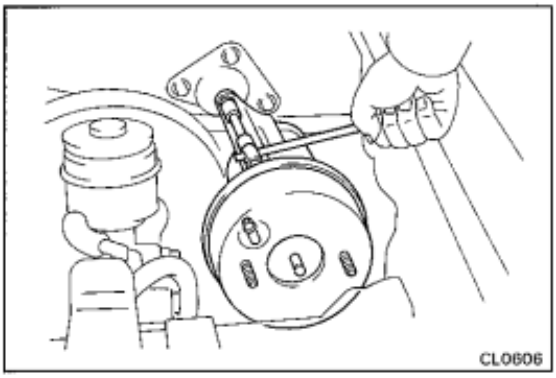

4. **DISCONNECT CLEVIS FROM CLUTCH PEDAL**
   Remove the clip and clevis pin.

5. **(LHD Models)**
   REMOVE CLUTCH BOOSTER WITH BOOSTER CYLINDER BRACKET
   (a) Remove two nuts from room side.
   (b) Remove one bolt and pull off the clutch booster with bracket.

6. **(RHD Models)**
   REMOVE CLUTCH BOOSTER
   Remove four bolts and the clutch booster.

COMPONENTS

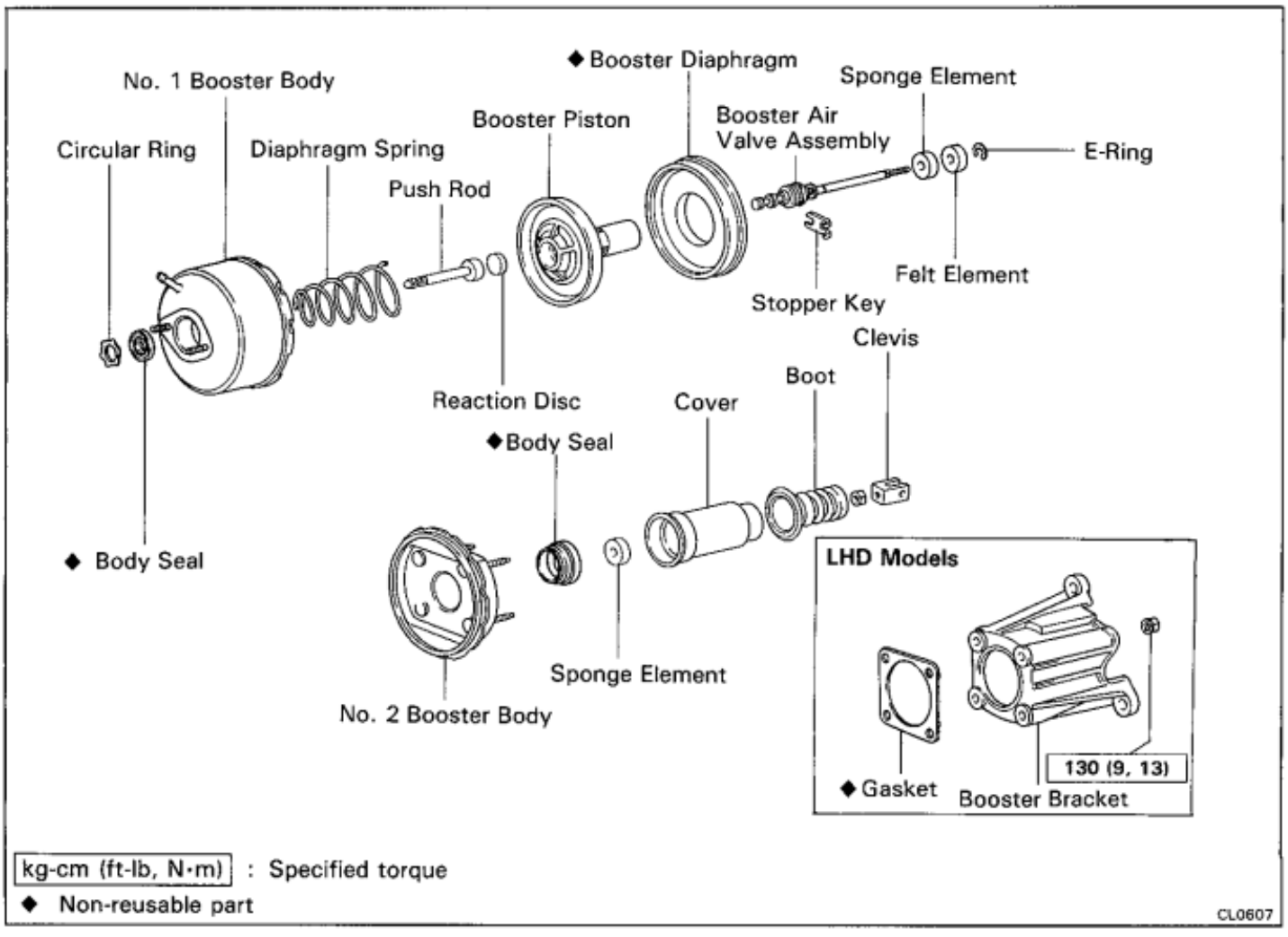

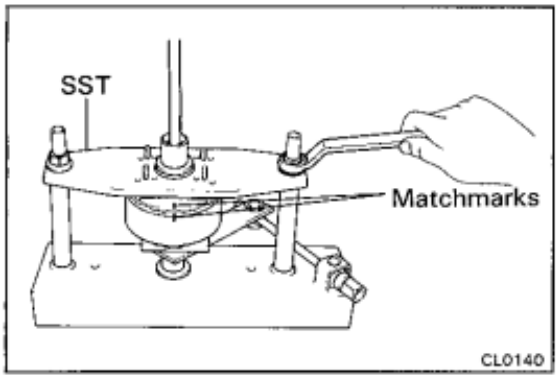

DISASSEMBLY OF CLUTCH BOOSTER

1. **REMOVE CLEVIS**

2. **(LHD Models)**
REMOVE BOOSTER BRACKET

Remove four nuts and the booster bracket.

3. **REMOVE PISTON COVER AND BOOT**

(a) Remove the piston cover and boot.

(b) Remove the sponge element from the boot.

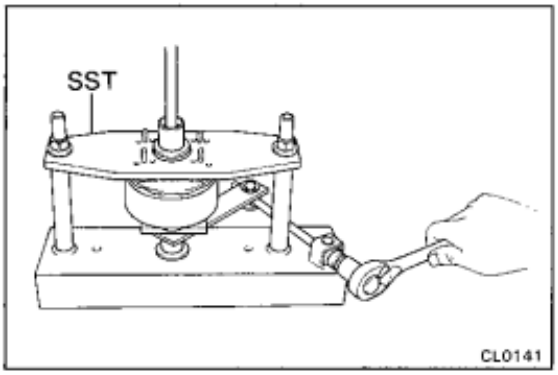

4. **REMOVE SPONGE AND FELT ELEMENT**

Using a screwdriver, remove the E-ring and sponge and felt element.

5. **SEPARATE NO.1 AND NO.2 BOOSTER BODIES**

(a) Put matchmarks on the No.1 and No.2 booster bodies.

(b) Set the booster in SST.

SST 09753-00013

NOTICE: Be careful not to tighten the two nuts of the SST too tightly.

(c) Turn the No.1 booster body clockwise, until the No.1 and No.2 booster bodies separate.

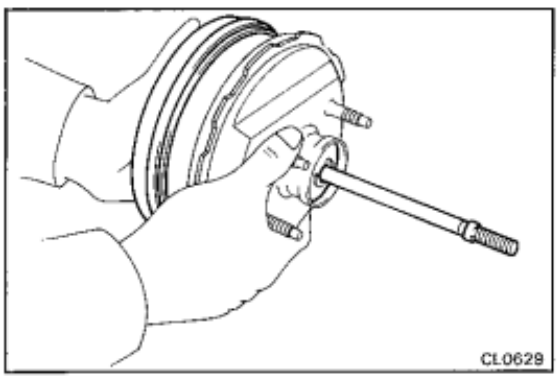

6. **REMOVE BOOSTER PISTON ASSEMBLY FROM NO.2 BOOSTER BODY**

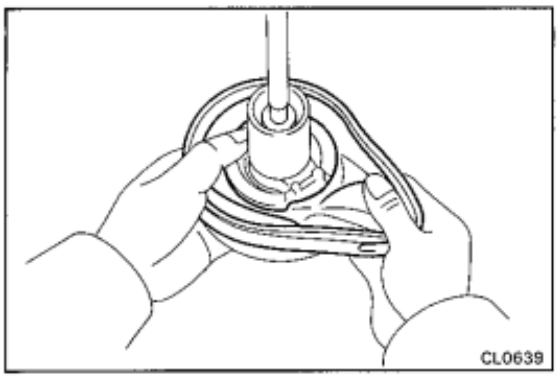

7. **REMOVE BOOSTER DIAPHRAGM FROM BOOSTER PISTON**

Pull off the diaphragm.

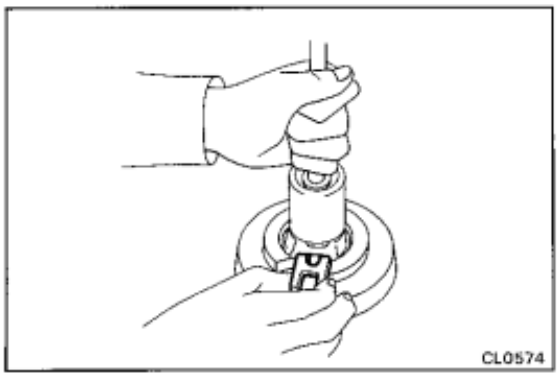

8. **REMOVE BOOSTER AIR VALVE ASSEMBLY FROM BOOSTER PISTON**

(a) Push down the booster air valve in the booster piston and remove the stopper key.

(b) Pull off the booster air valve assembly.

9. **REMOVE REACTION DISC FROM BOOSTER PISTON**

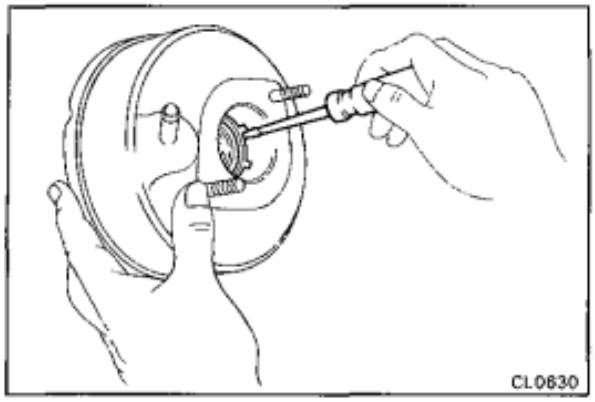

10. REMOVE BODY SEAL FROM NO.1 BOOSTER BODY

Using a screwdriver, pry out the circular ring and remove the body seal.

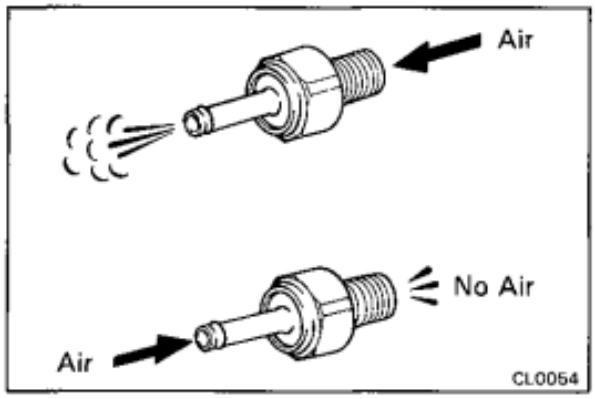

INSPECTION AND REPLACEMENT OF CLUTCH BOOSTER

1. INSPECT CHECK VALVE OPERATION

(a) Check that air flows from the vacuum tank side to the vacuum hose side.

(b) Check that air does not flow the vacuum hose side to the vacuum tank side.

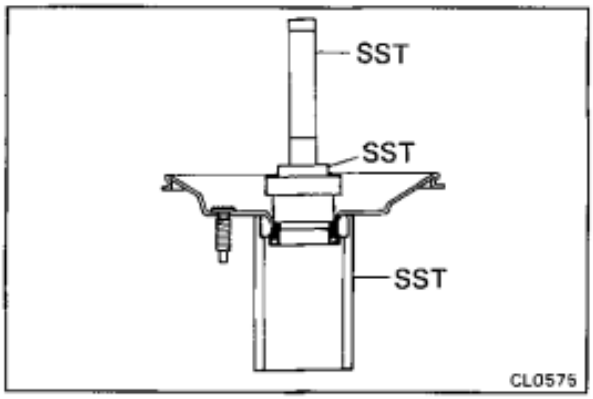

2. IF NECESSARY, REPLACE BODY SEAL FOR NO.2 BOOSTER BODY

(a) Using SST, remove the body sealer.

SST 09630-00012, 09753-30020 and 09612-30012

HINT: Support the No.2 booster body using SST cylinder base only.

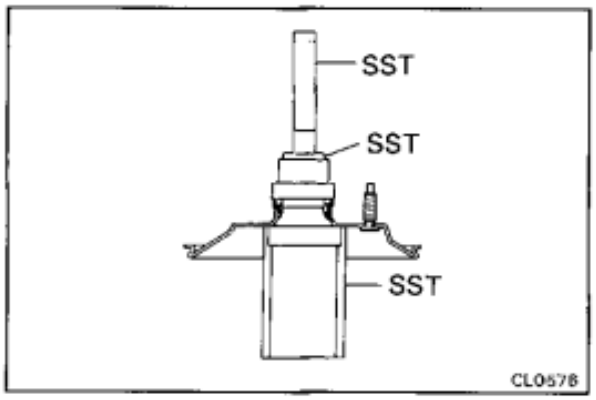

(b) Using SST, drive in the body sealer.

SST 09630-00012, 09753-30020 and 09612-30012

HINT: Support the No.2 booster body using SST cylinder base only.

ASSEMBLY OF CLUTCH BOOSTER

(See page CL-10)

1. APPLY SILICONE GREASE TO PARTS SHOWN BELOW

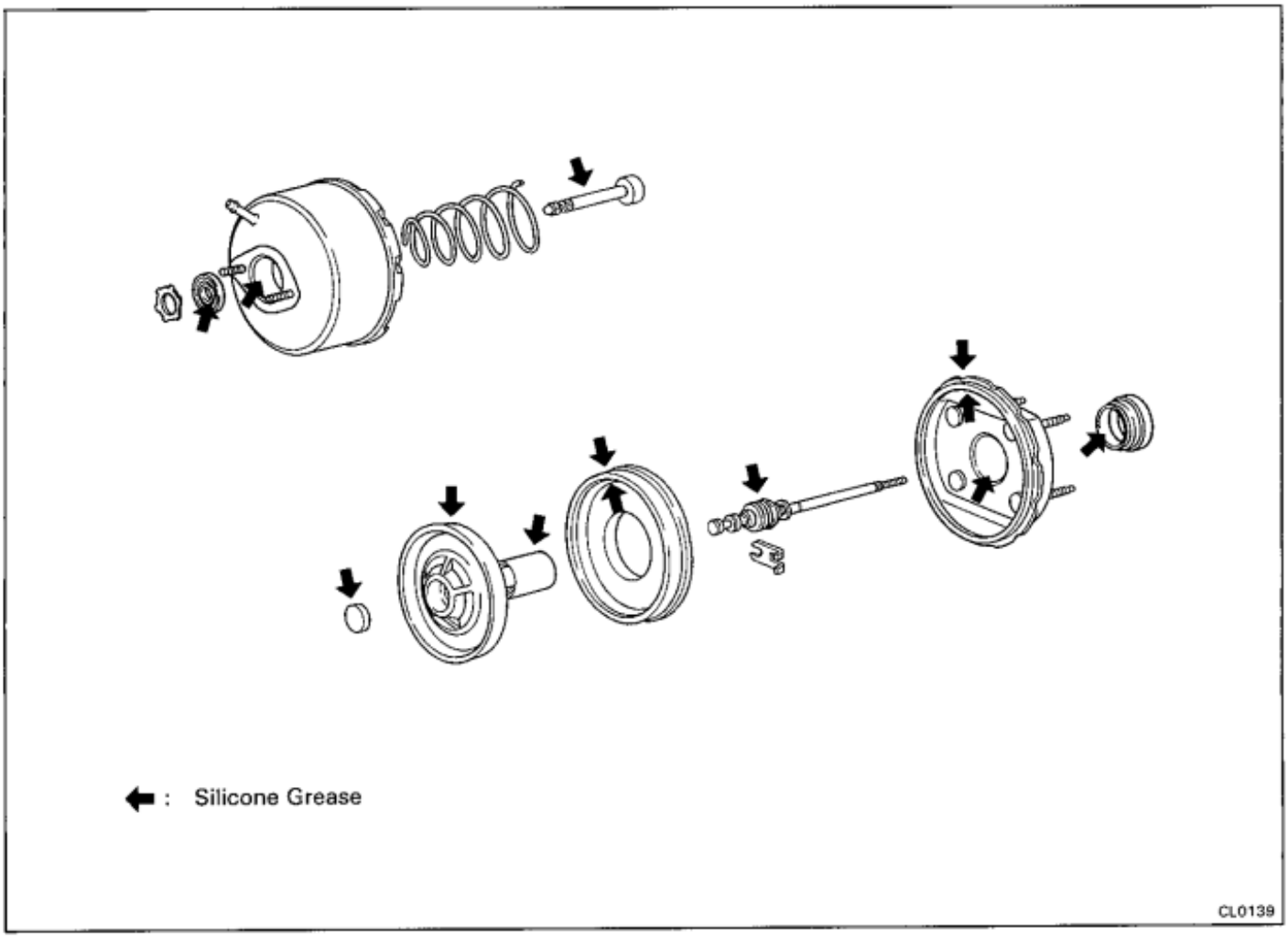

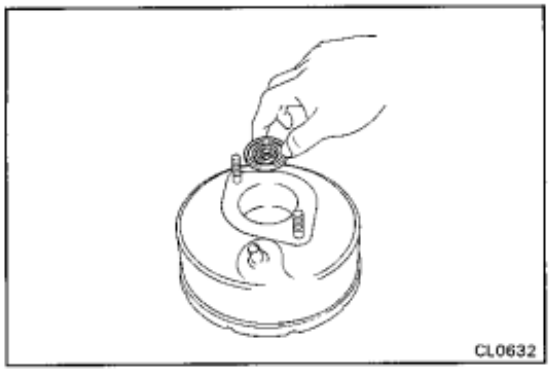

2. INSTALL BODY SEAL TO NO.1 BOOSTER BODY

(a) Place the body seal in position.

(b) Secure the body seal with the circular ring.

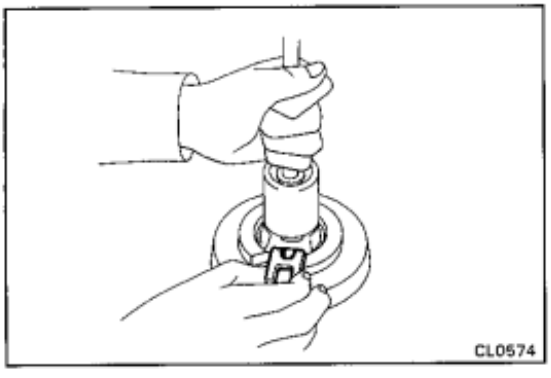

3. INSTALL BOOSTER AIR VALVE ASSEMBLY TO BOOSTER PISTON

(a) Insert the booster air valve in the booster piston.

(b) Push the booster air valve in the booster piston and install the stopper key.

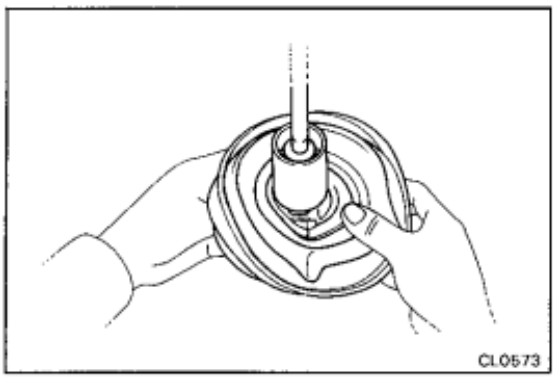

4. INSTALL DIAPHRAGM TO BOOSTER PISTON

Push in the head of the diaphragm.

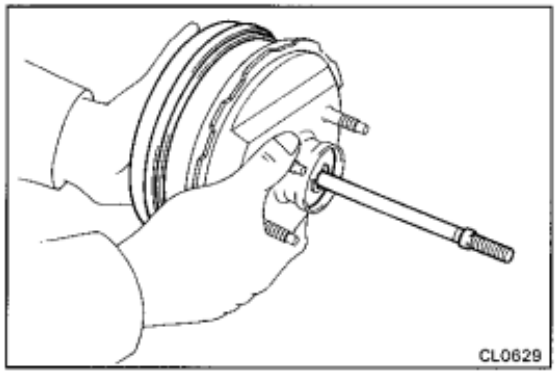

5. INSTALL BOOSTER PISTON ASSEMBLY TO NO.2 BOOSTER BODY

6. INSTALL REACTION DISC TO BOOSTER PISTON

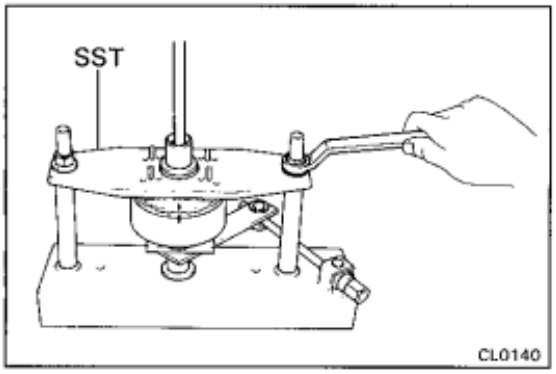

7. ASSEMBLY NO.1 AND NO.2 BOOSTER BODIES

(a) Place the No.1 booster on SST.

SST 09753-00013

(b) Place the push rod, diaphragm spring and No.2 booster body in the No.1 booster body.

(c) Compress the diaphragm spring between the No.1 and No.2 booster bodies.

NOTICE: Be careful not to tighten the two nuts of the SST too tightly.

(d) Turn the No.1 booster body counterclockwise, until the matchmarks match.

HINT: If the No.1 booster body is too tight to be turned, apply more silicone grease on the diaphragm edge that contacts the No.1 and No.2 booster bodies.

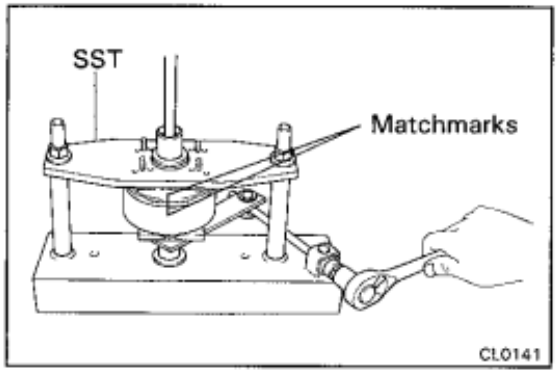

8. INSTALL SPONGE AND FELT ELEMENT

(a) Install the sponge and felt element into the booster.

(b) Install E-ring onto booster air valve assembly.

9. INSTALL PISTON COVER WITH BOOT

(a) Install the sponge element into the boot.

(b) Install the boot to the piston cover.

(c) Install a new gasket onto the booster and the piston cover with the boot.

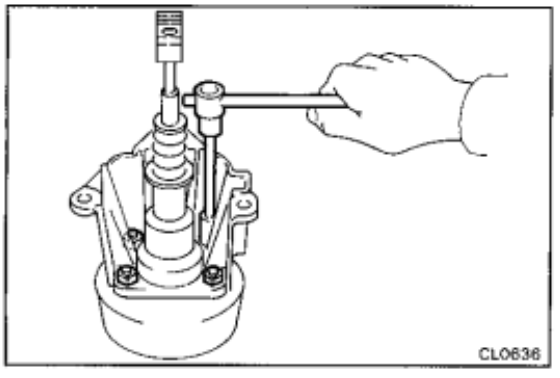

10. (LHD Models)
INSTALL BOOSTER TO BOOSTER BRACKET WITH FOUR NUTS

11. INSTALL CLEVIS

INSTALLATION OF CLUTCH BOOSTER

(See page CL-11)

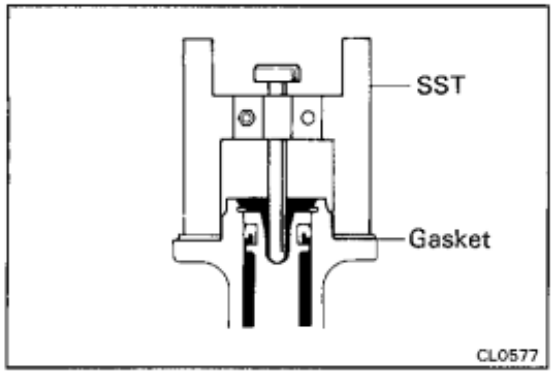

1. **ADJUST LENGTH OF BOOSTER PUSH ROD**

   (a) Install the gasket on the master cylinder.

   (b) Set the SST on the gasket, and lower the pin until its tip slightly touches the piston.

   SST 09737-00010

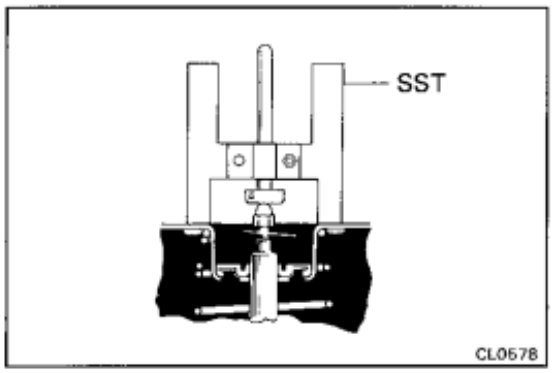

   (c) Turn the SST upside down, and set it on the booster.

   SST 09737-00010

   (d) Measure the clearance between the booster push rod and pin head (SST).

   Clearance: 0 mm (0 in.)

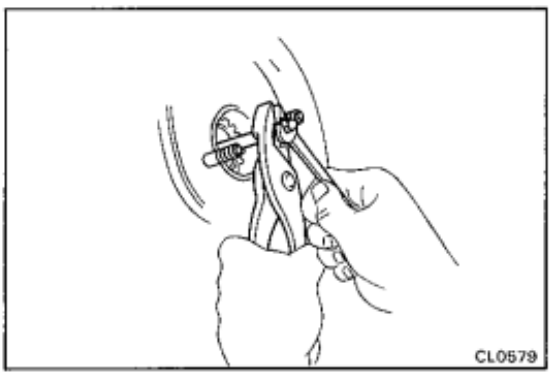

   (e) Adjust the booster push rod length until the push rod lightly touches the pin head.

   HINT: When adjusting the push rod, depress the brade pedal enough so that the push rod sticks out.

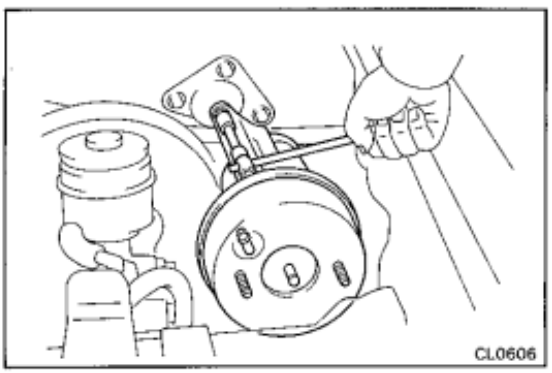

2. **(LHD Models)**
   INSTALL CLUTCH BOOSTER WITH BOOSTER CYLINDER BRACKET TO BODY

   (RHD Models)
   INSTALL CLUTCH BOOSTER TO BODY

3. **CONNECT CLEVIS TO CLUTCH PEDAL**

   Connect the clevis to the clutch pedal with the clevis pin and clip.

4. **INSTALL MASTER CYLINDER TO CLUTCH BOOSTER**
   (See page CL-8)

   Torque: 130 kg-cm (9 ft-lb, 13 N·m)

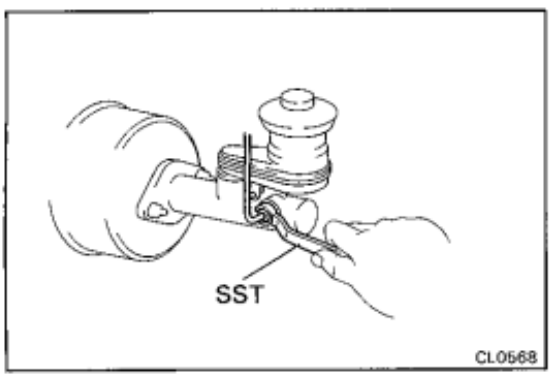

5. **CONNECT CLUTCH LINE UNION**

   Using SST, connect the union.

   SST 09751-36011

6. **CONNECT VACUUM HOSE TO CLUTCH BOOSTER**

7. **ADJUST CLUTCH PEDAL AND BLEED SYSTEM**
   (See page CL-5)

CLUTCH ACCUMULATOR

COMPONENTS

•w/o Clutch Booster

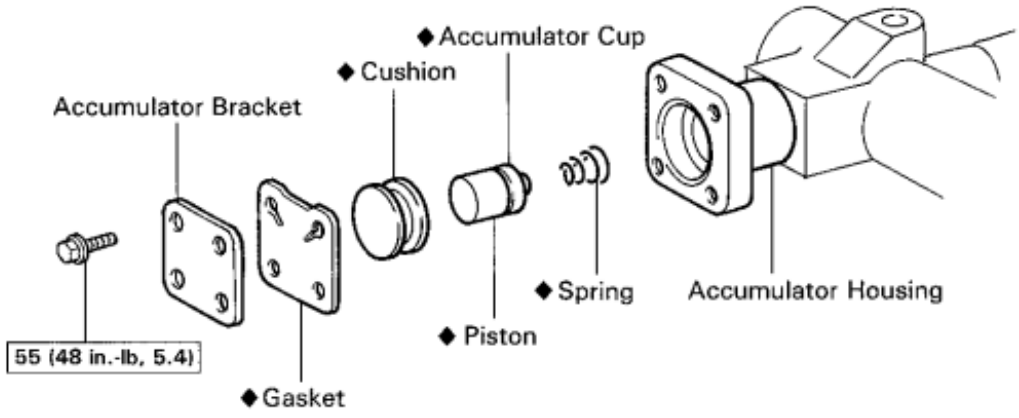

• w/ Clutch Booster

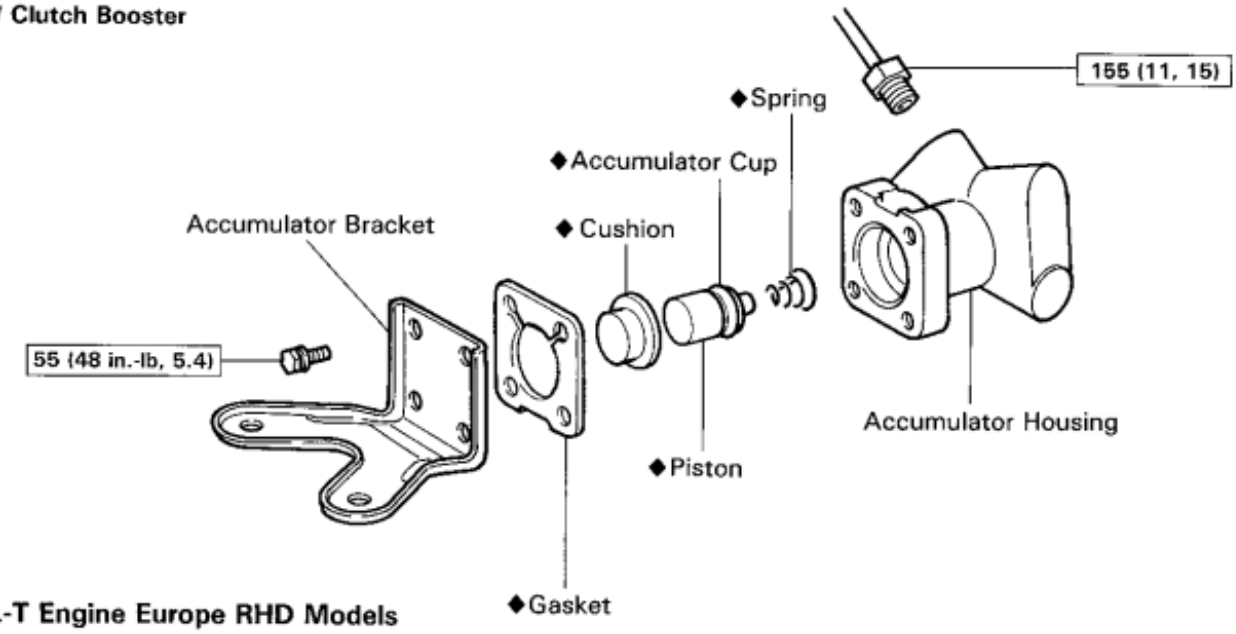

•2L-T Engine Europe RHD Models

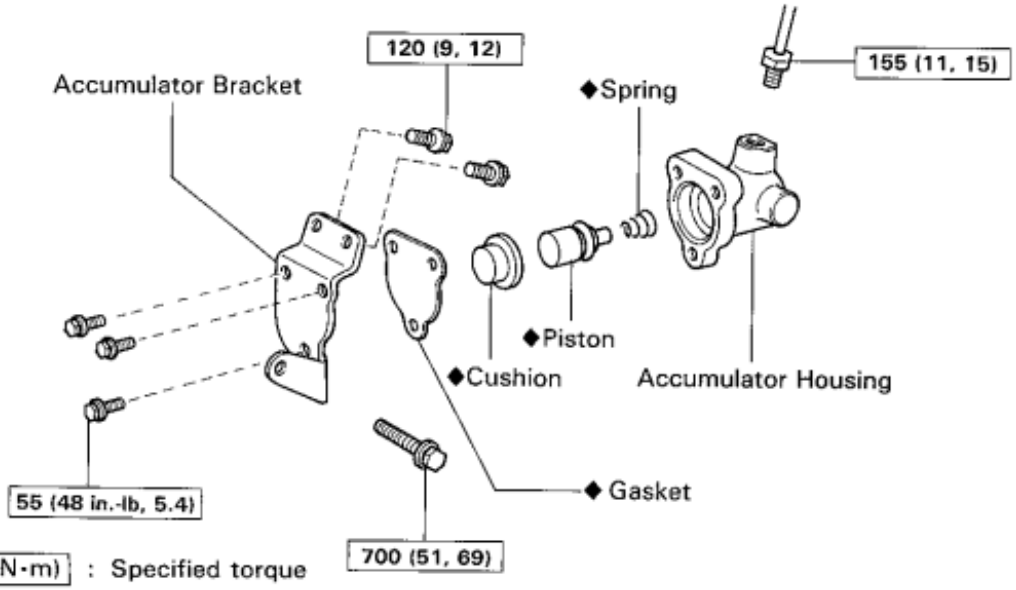

kg-cm (ft-lb, N·m) : Specified torque

◆ Non-reusable part

CL0580
CL0581
CL0608

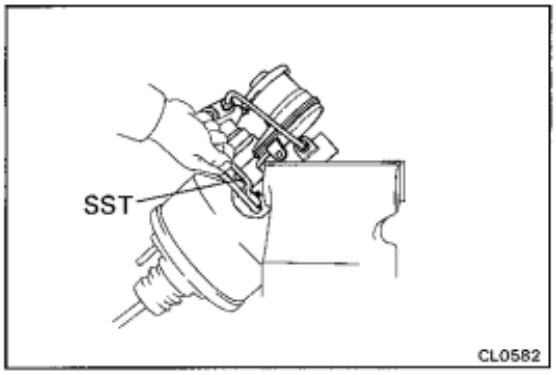

REMOVAL OF CLUTCH ACCUMULATOR

(MAIN POINT OF REMOVAL AND INSTALLATION)

(w/o Clutch Booster)

[2L-T Engine Europe RHD Models]

REMOVE CLUTCH ACCUMULATOR

Remove a bolt and the clutch accumulator with bracket from transmission.

[Others]

REMOVE MASTER CYLINDER
(See page CL-6)

(w/ Clutch Booster)

1. **REMOVE MASTER CYLINDER**
   (See page CL-8)

2. **REMOVE CLUTCH ACCUMULATOR**

   Remove two bolts and clutch accumulator with bracket.

w/o Clutch Booster

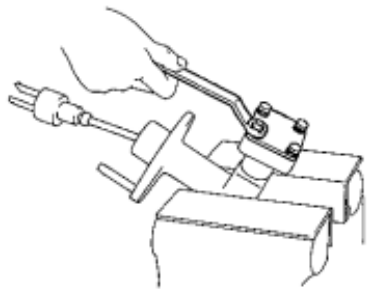

w/ Clutch Booster

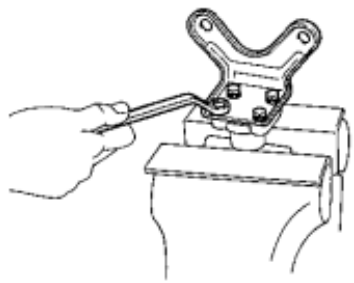

DISASSEMBLY OF CLUTCH ACCUMULATOR

1. **REMOVE CLUTCH BRACKET**

   (a) (2L-T Engine Europe RHD Models)
   Remove three bolts and the bracket.

   (b) (Others)
   Remove four bolts and the bracket.

   (c) Remove the gasket from the bracket.

2. **REMOVE CUSHION**

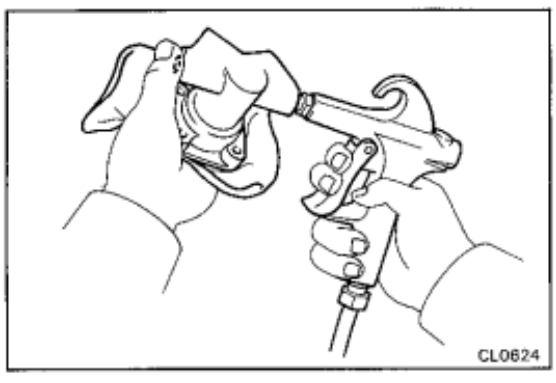

3. **REMOVE PISTON AND SPRING**

   Using compressed air, remove the piston and spring.

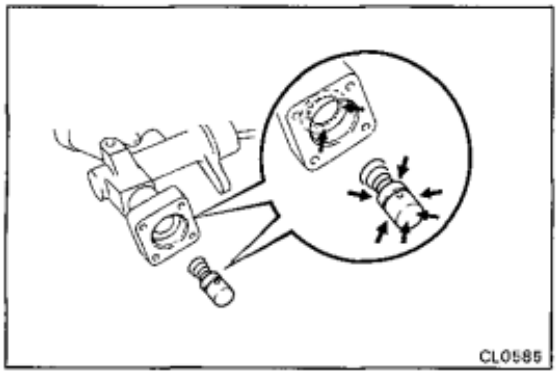

ASSEMBLY OF CLUTCH ACCUMULATOR

(w/o Clutch Booster)

(See page CL-17)

1. **COAT PISTON AND ACCUMULATOR BODY WITH LITHIUM SOAP BASE GLYCOL GREASE, AS SHOWN**

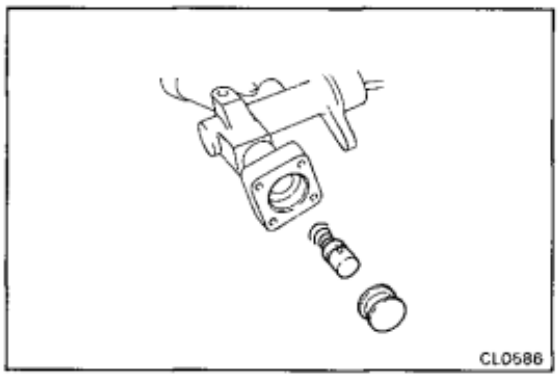

2. **INSTALL SPRING, PISTON AND CUSHION INTO ACCUMULATOR**

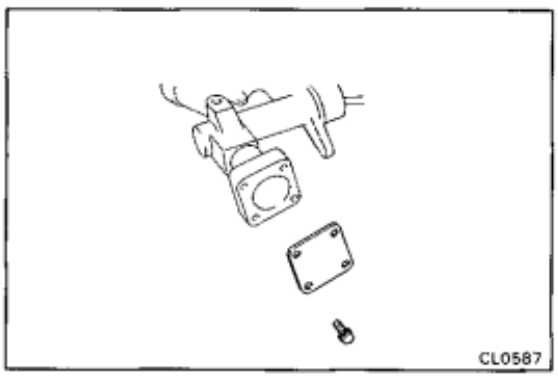

3. **INSTALL ACCUMULATOR BRACKET**
   (a) Install a new gasket to the bracket.
   (b) (2L-T Engine Europe RHD Models)
   Install the bracket to the accumulator and tighten the three bolts.

   Torque: 55 kg-cm (48 in.-lb, 5.4 N·m)

   (c) (Others)
   Install the bracket to the accumulator and tighten the four bolts.

   Torque: 55 kg-cm (48 in.-lb, 5.4 N·m)

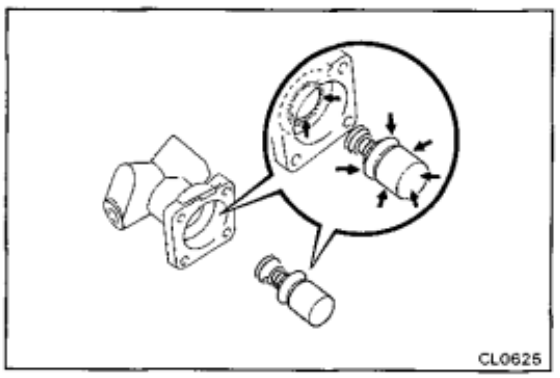

(w/ Clutch Booster)

(See page CL-17)

4. **COAT PISTON AND ACCUMULATOR BODY WITH LITHIUM SOAP BASE GLYCOL GREASE, AS SHOWN**

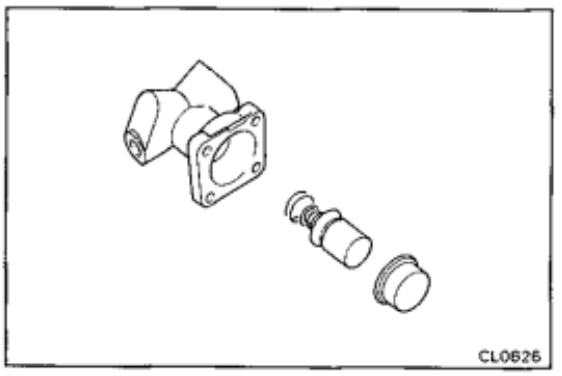

5. **INSTALL SPRING, PISTON AND CUSHION INTO ACCUMULATOR**

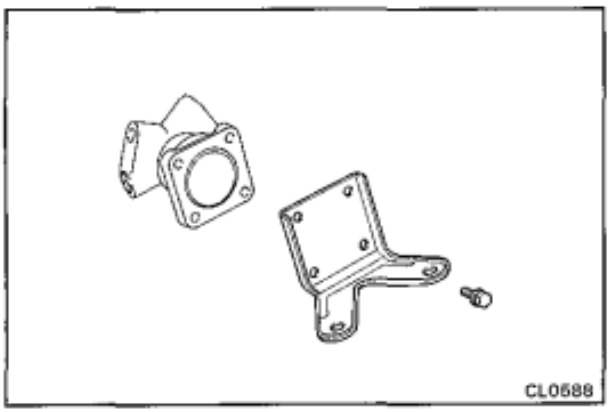

6. **INSTALL ACCUMULATOR BRACKET**
   (a) Install a new gasket to the bracket.
   (b) Install the bracket to the accumulator and tighten the four bolts.
   Torque: 55 kg-cm (48 in.-lb, 5.4 N·m)

INSTALLATION OF CLUTCH ACCUMULATOR

(w/o Clutch Booster)

[2L-T Engine Europe RHD Models]

INSTALL CLUTCH ACCUMULATOR

Install a bolt and the clutch accumulator with bracket to transmission.

Torque: 155 kg-cm (11 ft-lb, 15 N·m)

[Others]

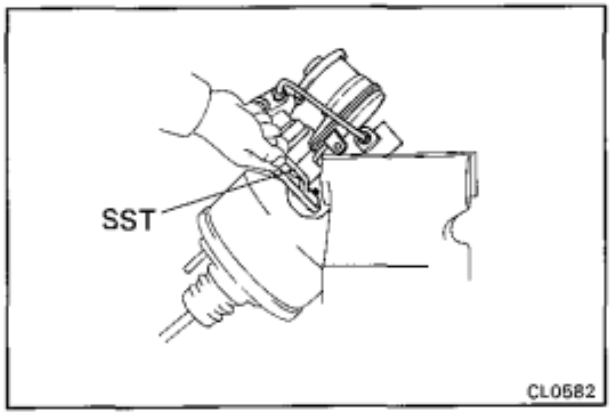

INSTALL MASTER CYLINDER
(See page CL-6)

(w/ Clutch Booster)

1. **INSTALL CLUTCH ACCUMULATOR**
   Install two bolts and clutch accumulator with bracket.
2. **CONNECT CLUTCH LINE TUBE**
   Using SST, connect the clutch line tube.
   SST 09751-36011
   Torque: 155 kg-cm (11 ft-lb, 15 N·m)
3. **INSTALL MASTER CYLINDER**
   (See page CL-8)
4. **FILL RESERVOIR WITH BRAKE FLUID AND BLEED CLUTCH SYSTEM**
5. **CHECK FOR LEAKS**

CLUTCH RELEASE CYLINDER

COMPONENTS

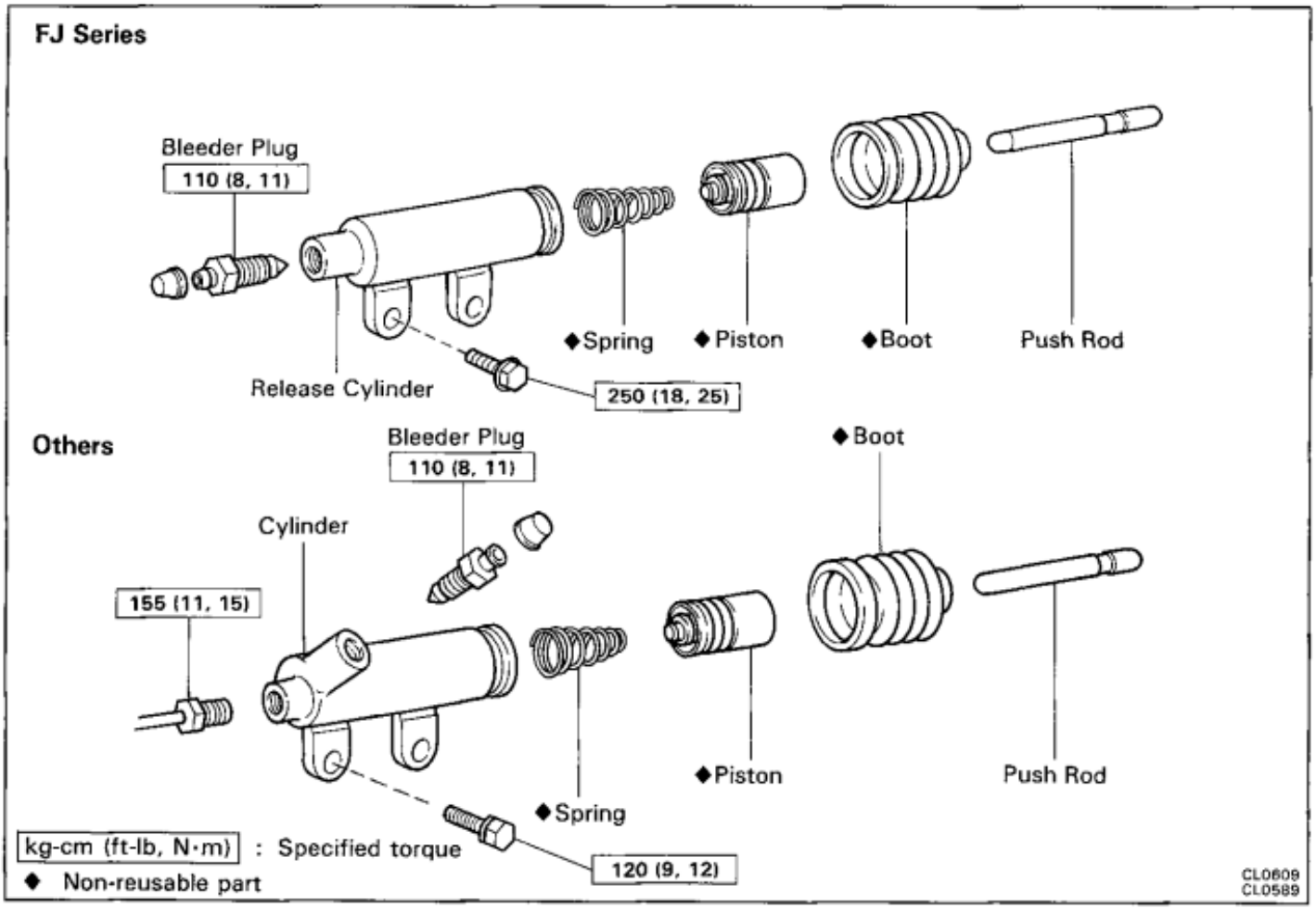

REMOVAL AND INSTALLATION OF CLUTCH RELEASE CYLINDER

(MAIN POINT OF REMOVAL AND INSTALLATION)

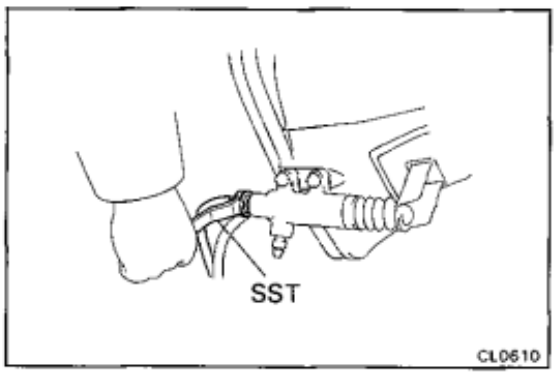

1. **DISCONNECT AND CONNECT CLUTCH LINE TUBE**
   Using SST, disconnect and connect the tube.
   SST 09751-36011

2. **INSPECT RELEASE CYLINDER BORE FOR SCORING OR CORROSION**
   If a problem is found, clean or replace the cylinder.

3. **INSPECT PISTON AND CUPS FOR WEAR, SCORING, CRACKS OR SWELLING**
   If either one requires replacement, use the parts from the cylinder kit.

4. **INSPECT PUSH ROD FOR WEAR OR DAMAGE**
   If necessary, replace the push rod.

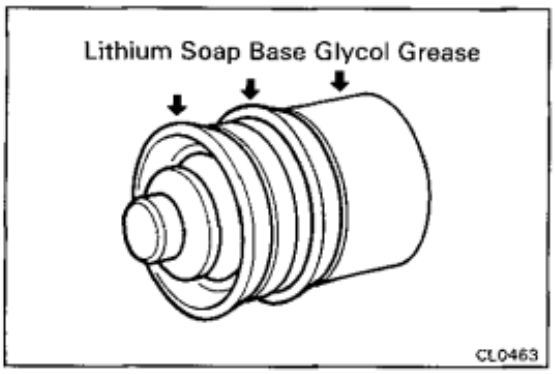

5. **COAT PISTON WITH LITHIUM SOAP BASE GLYCOL GREASE AS SHOWN**

6. **BLEED CLUTCH SYSTEM**
   (See page CL-5)

CLUTCH UNIT

REMOVAL OF CLUTCH UNIT

Remove the parts as shown.

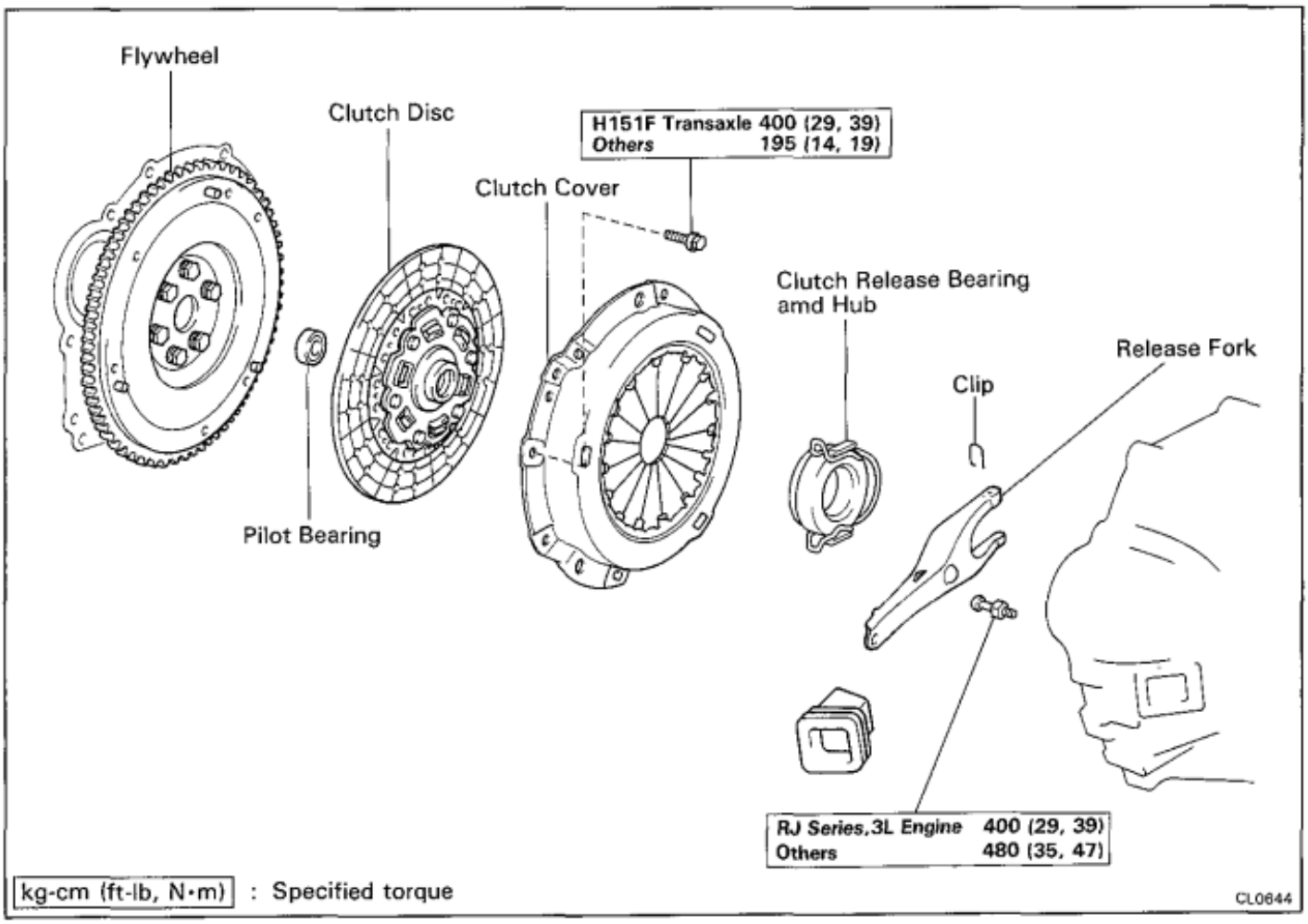

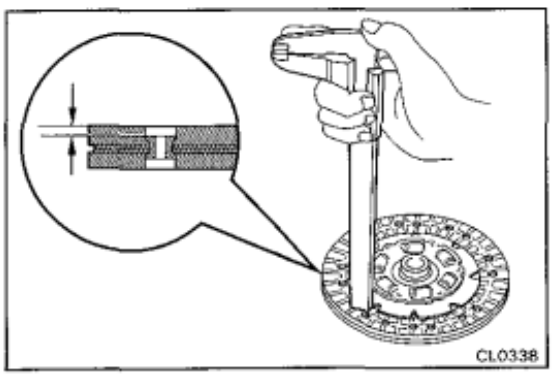

INSPECTION OF CLUTCH PARTS

1. **INSPECT CLUTCH DISC FOR WEAR OR DAMAGE**

   Using calipers, measure the rivet head depth.

   Maximum rivet depth: 0.3 mm (0.012 in.)

   If a problem is found, replace the clutch disc.

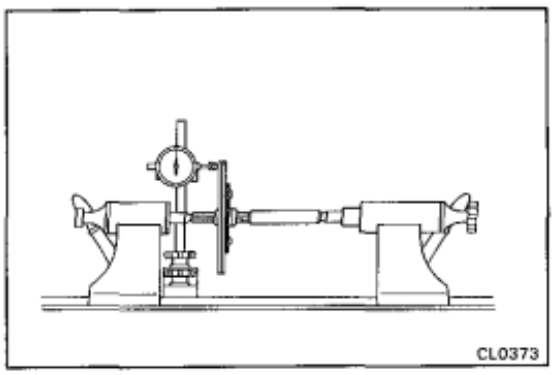

2. **INSPECT CLUTCH DISC RUNOUT**

   Using a dial indicator, check the disc runout.

   Maximum runout: 0.8 mm (0.031 in.)

   If runout is excessive, replace the clutch disc.

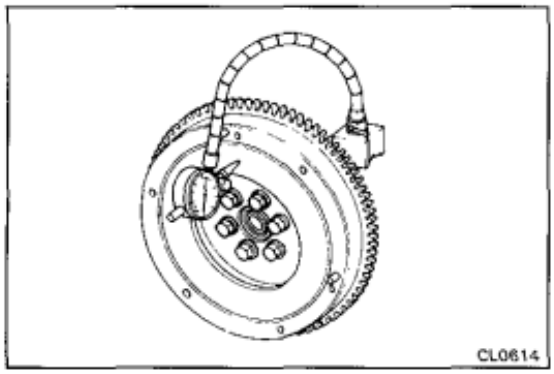

3. INSPECT FLYWHEEL RUNOUT

Using a dial indicator, check the flywheel runout.

Maximum runout: 0.1 mm (0.004 in.)

If runout is excessive, replace the flywheel.

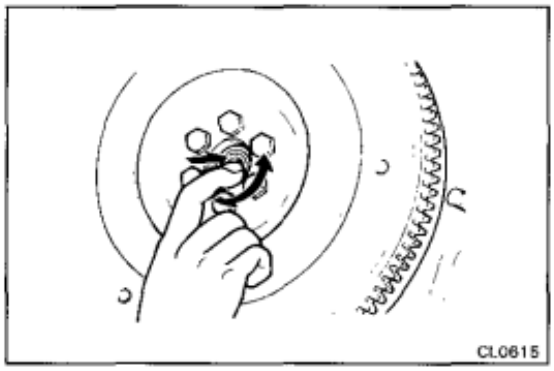

4. INSPECT PILOT BEARING

Turn the bearing by hand while applying force in the axial direction.

If the bearing sticks or has much resistance, replace the pilot bearing.

HINT: The bearing is permanently lubricated and requires no cleaning or lubrication.

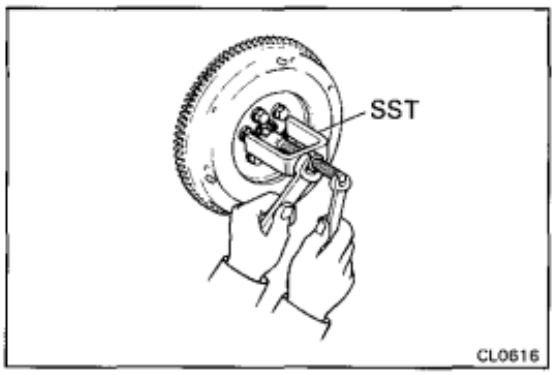

5. IF NECESSARY, REPLACE PILOT BEARING

(a) Using SST, remove the pilot bearing.

SST 09303-35011

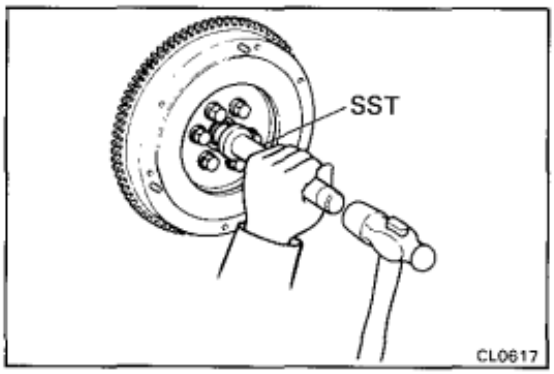

(b) Using SST, install the pilot bearing.

SST 09304-30012

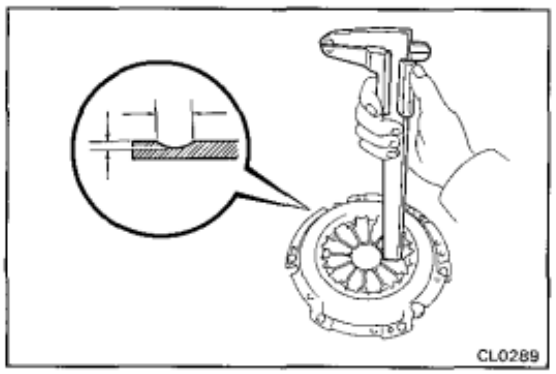

6. INSPECT DIAPHRAGM SPRING FOR WEAR

Using calipers, measure the diaphragm spring for depth and width of wear.

Maximum: Depth 0.6 mm (0.024 in.)
Width 5.0 mm (0.197 in.)

If necessary, replace the clutch cover.

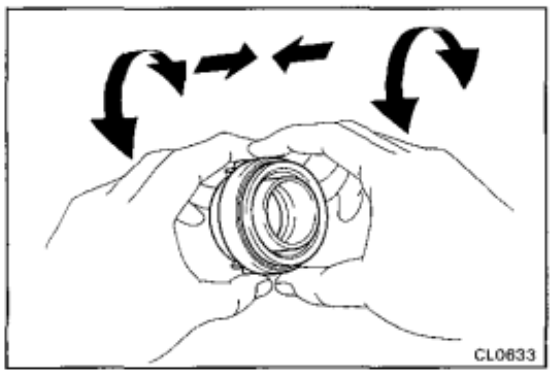

7. INSPECT RELEASE BEARING

Turn the bearing by hand while applying force in the axial direction.

HINT: The bearing is permanently lubricated and requires no cleaning or lubrication.

If a problem is found, replace th bearing.

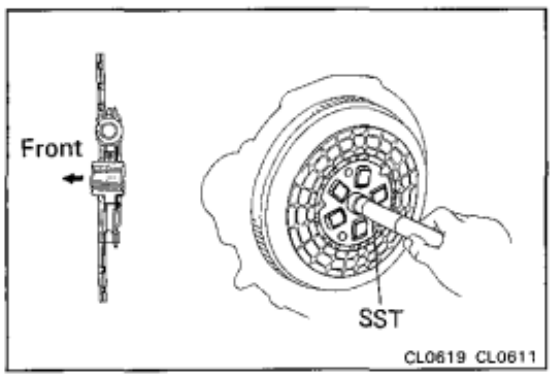

INSTALLATION OF CLUTCH UNIT (MAIN POINT OF INSTALLATION)

1. INSTALL CLUTCH DISC AND COVER ON FLYWHEEL

(a) Insert the SST in the clutch disc, and then set them and the cover in position.

SST 09301-55022

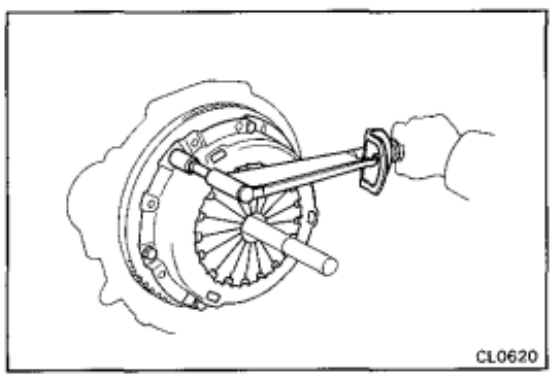

2. INSTALL CLUTCH COVER

(a) Align the matchmarks on the clutch cover and flywheel.

(b) Torque the bolts on the clutch cover in the order shown.

Torque: 195 kg-cm (14 ft-lb, 19 N·m)

HINT: Temporarily tighten the No.1 and No.2 bolts.

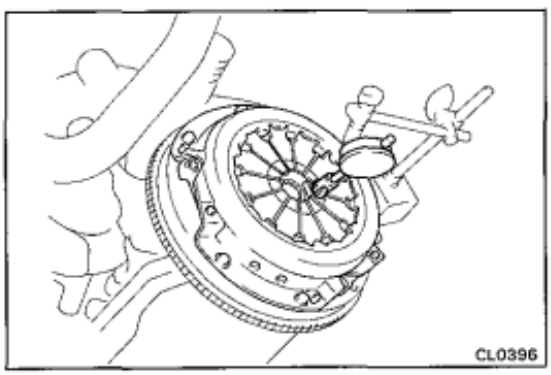

3. CHECK DIAPHRAGM SPRING TIP ALIGNMENT

Using dial indicator, check the diaphragm spring tip alignment.

Maximum non-alignment: 0.5 mm (0.020 in.)

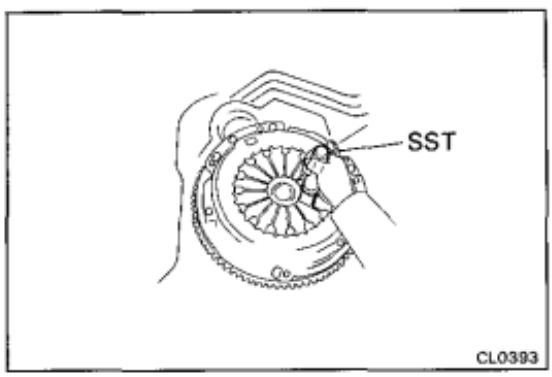

If alignment is not as specified, using SST, adjust the diaphragm spring tip alignment.

SST 09333-00013

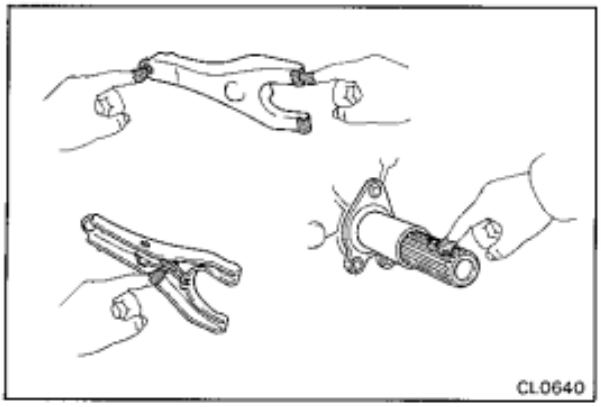

4. **APPLY MOLYBDENUM DISULPHIDE LITHIUM BASE GREASE (NLGI NO.2) AS SHOWN**

CLUTCH

Specifications

Pedal height (from asphalt sheet)			181 mm	7.13 in.
Pedal freeplay	w/o Clutch booster		13 – 23 mm	0.51 – 0.91 in.
	w/ Clutch booster		15 – 30 mm	0.59 – 1.18 in.
Push rod play at pedal top			1 – 5 mm	0.04 – 0.20 in.
Booster air valve stroke at pedal top			5 – 9 mm	0.20 – 0.35 in.
Booster push rod to piston clearance		w/ SST	0 mm	0 in.
Disc rivet head depth		Limit	0.3 mm	0.012 in.
Disc runout		Limit	0.8 mm	0.031 in.
Diaphragm spring tip alignment		Limit	1.0 mm	0.039 in.
Diaphragm spring finger wear	Depth	Limit	0.6 mm	0.024 in.
	Width	Limit	5.0 mm	0.197 in.
Flywheel runout		Limit	0.2 mm	0.008 in.

Torque Specifications

Part tightened	kg-cm	ft-lb	N·m
Master cylinder × Body	80	69 in.-lb	7.8
Clutch line union	155	11	15
Clevis lock nut	250	18	25
Master cylinder × Clutch booster	130	9	13
Clutch Booster × Bracket	130	9	13
Bracket × Body	130	9	13
Accumulator bracket × Accumulator housing	55	48 in.-lb	5.4
Accumulator line union	155	11	15
Accumulator bleeder plug	110	8	11
Accumulator bracket × Transmission	120	9	12
(2L-T Engine Europe RHD Models Only)	700	51	69
Release cylinder set bolt	120	9	12
Release cylinder bleeder plug	110	8	11
Clutch cover × Flywheel	195	14	19
Master cylinder union bolt	250	18	25

DESCRIPTION

- Transmission types, G40, G52, H41, H55F, R141F, R150F AND R151F are constant mesh synchronizers for forward gears and a sliding mesh reverse gear.
- The illustrations below show the engagements of transmission gears.

1st

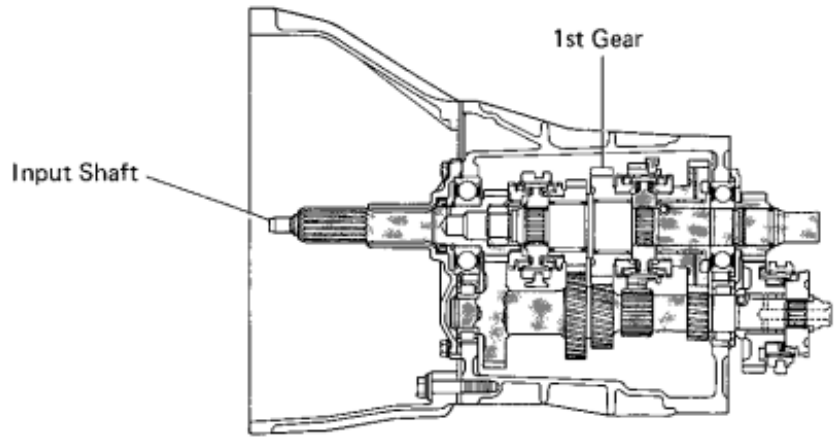

2nd

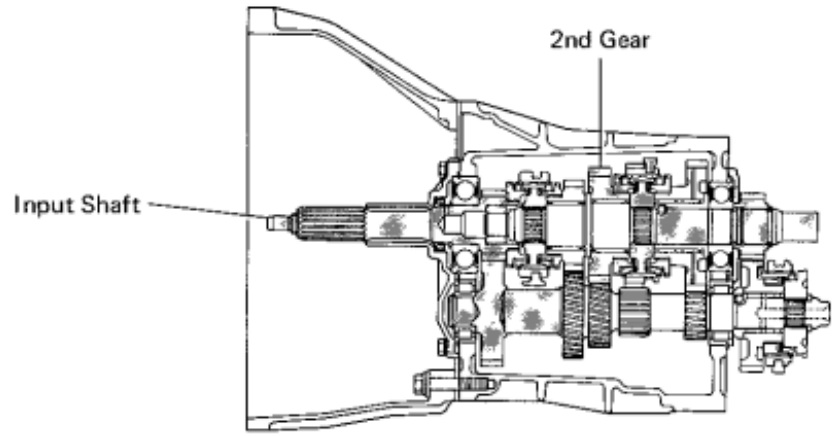

3rd

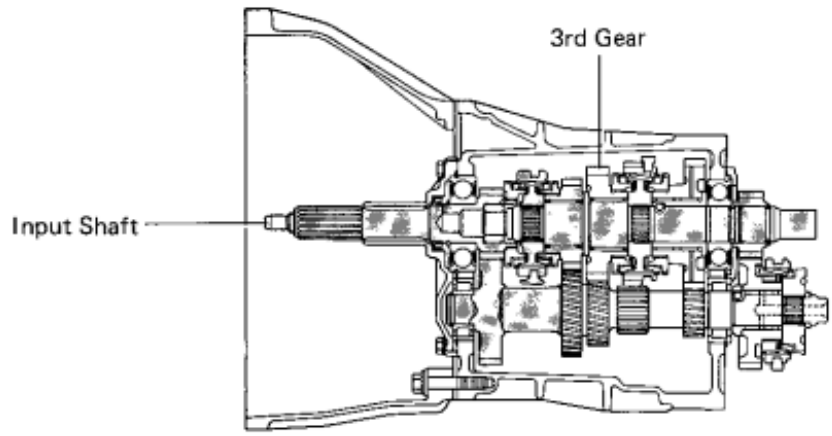

GM0443

4th

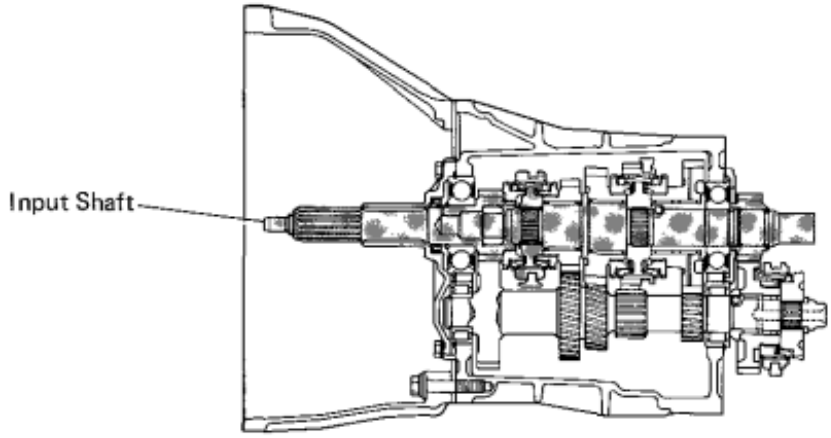

5th

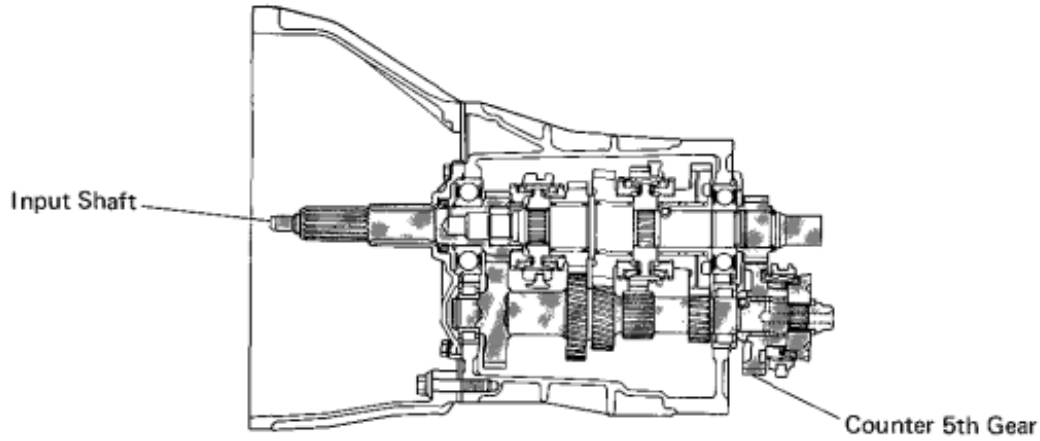

Rev.

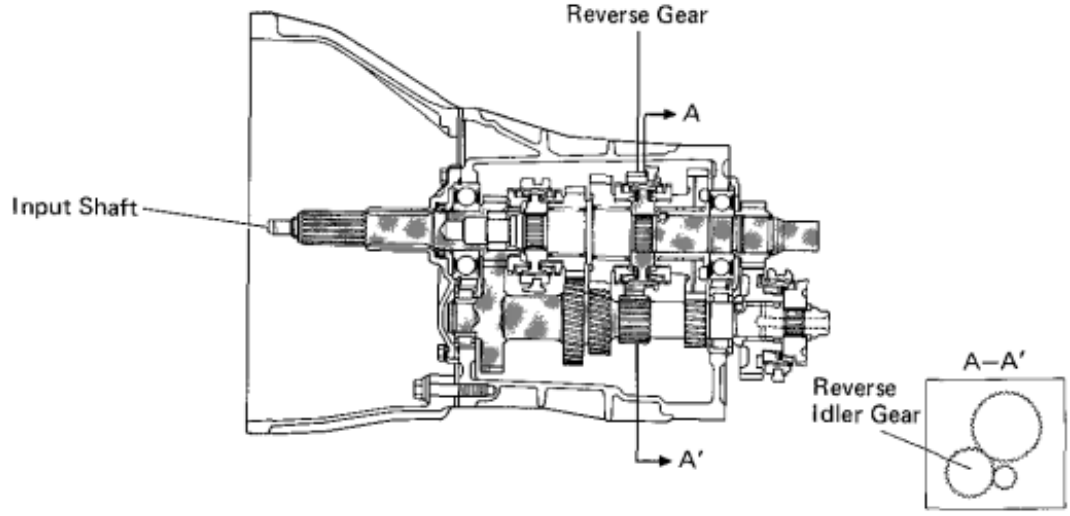

- The above illustration shows a G type transmission. The configuration of each gear is slightly different to W and R type transmissions but the gear engagements are the same.

MT0502 GM0443

PRECAUTIONS

When working with FIPG material, you must be observe the following.

- Using a razor blade and gasket scraper, remove all the old packing (FIPG) material from the gasket surfaces.
- Thoroughly clean all components to remove all the loose material.
- Clean both sealing surfaces with a non-residue solvent.
- Apply the seal packing in approx. 1 mm (0.04 in.) bead along the sealing surface.
- Parts must be assembled within 10 minutes of application. Otherwise, the packing (FIPG) material must be removed and reapplied.

TROUBLESHOOTING

Problem	Possible cause	Remedy	Page
Hard to shift or will not shift	Splines on input shaft dirty or burred	Repair as necessary	MT-5
	Transmission faulty	Disassemble and inspect transmission	MT-5
Transmission jumps out of gear	Transmission faulty	Diassemble and inspect transmission	MT-5

REMOVAL AND INSTALLATION OF TRANSMISSION

COMPONENTS

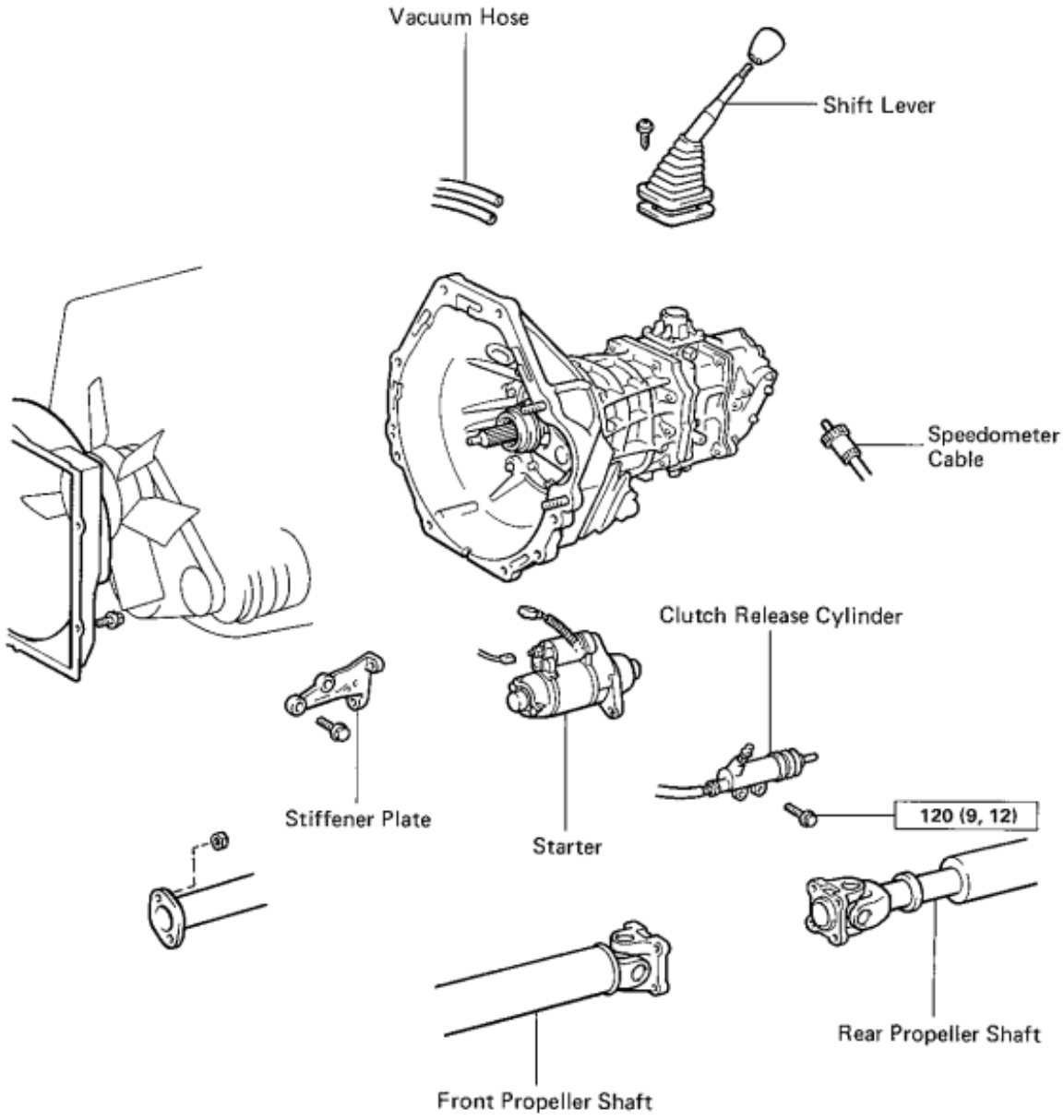

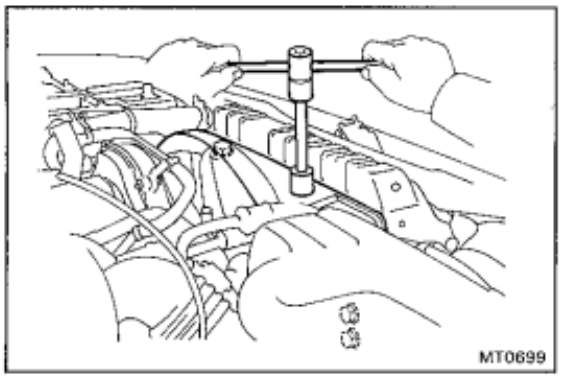

REMOVAL OF TRANSMISSION

1. **DISCONNECT BATTERY CABLE FROM NEGATIVE TERMINAL**

2. **LOOSEN FAN SHROUD OF THE COOLING FAN TO AVOID DAMAGE TO FAN**

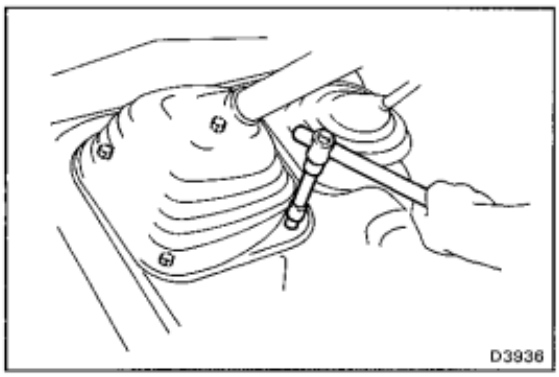

3. **REMOVE SHIFT LEVER**
   (a) Remove the four bolts and shift lever boot.

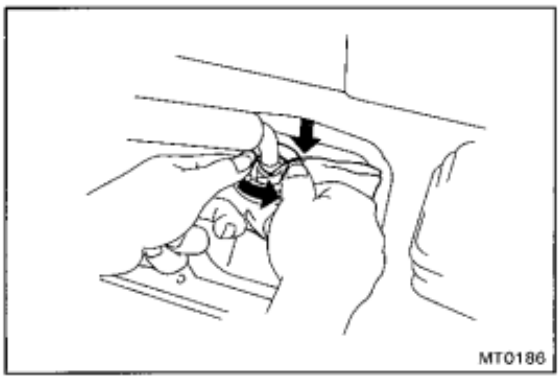

   (b) Cover the shift lever cap with a cloth.
   (c) Then, pressing down on the shift lever cap, rotate it counterclockwise to remove.
   (d) Remove the shift lever.

4. **RAISE VEHICLE**

5. **DISCONNECT PROPELLER SHAFT**
   (See page PR-2)

6. **REMOVE STIFFENER PLATE**
   Remove the four bolts and stiffener plate.

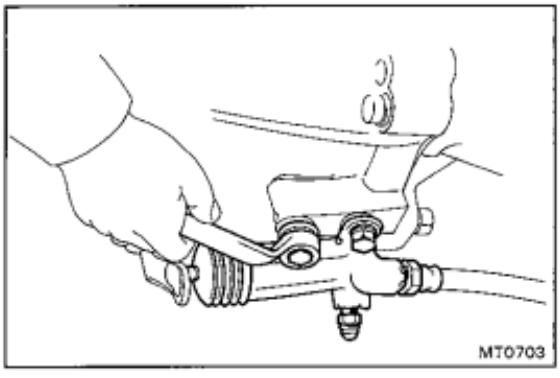

7. **REMOVE CLUTCH RELEASE CYLINDER**
   Remove the two bolts and clutch release cylinder.

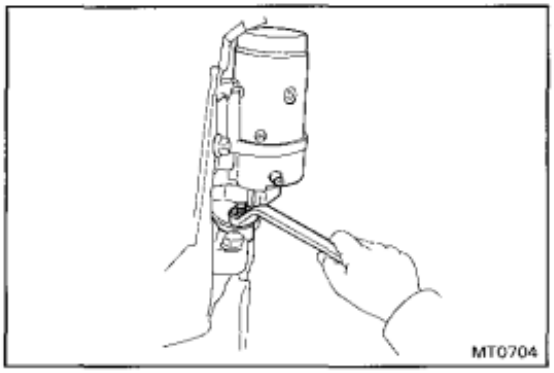

8. **REMOVE STARTER**

Remove the bolt, nut and starter.

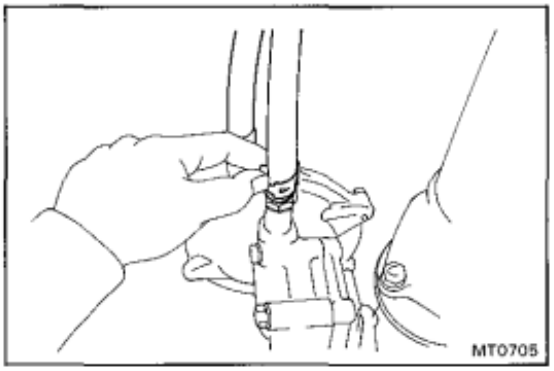

9. **(VACUUM SHIFT TYPE)**
REMOVE VACUUM HOSE

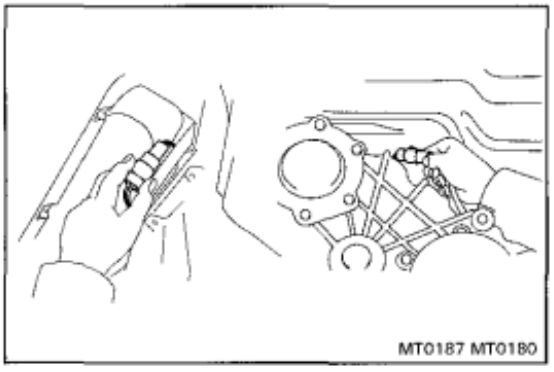

10. **REMOVE 4WD AND BACK-UP LIGHT SWITCH CONNECTOR**

11. **(VACUUM SHIFT TYPE)**
REMOVE L4 SWITCH CONNECTOR

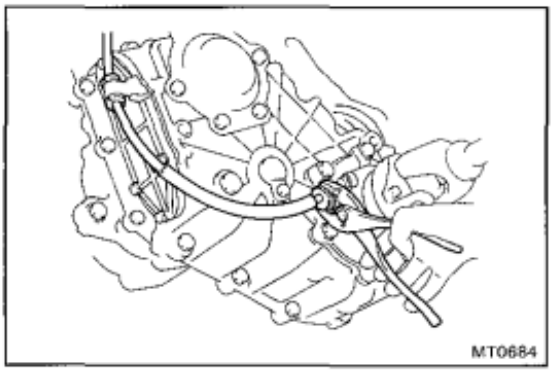

12. **REMOVE SPEEDOMETER CABLE**

Using pliers, remove the speedometer cable.

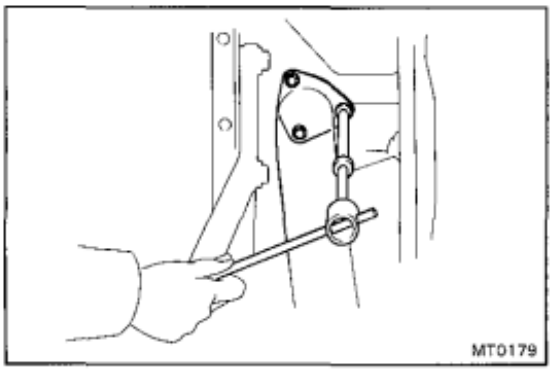

13. **REMOVE EXHAUST PIPE**

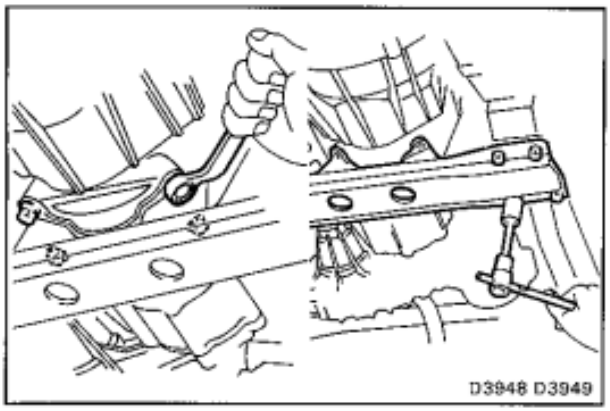

14. REMOVE CROSSMEMBER

Remove the eight bolts, two nuts and crossmember.

15. REMOVE REMAINING TRANSMISSION BOLTS

16. REMOVE TRANSMISSION

Remove transmission toward the rear.

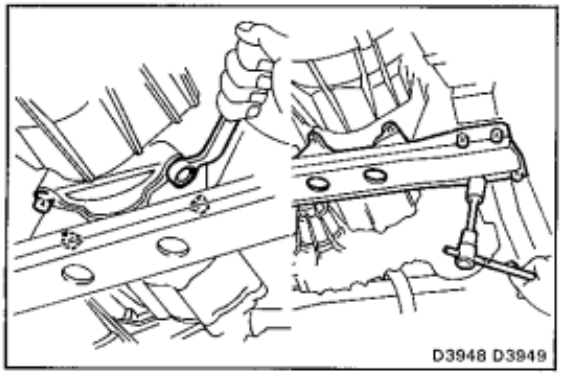

INSTALLATION OF TRANSMISSION

1. **INSTALL TRANSMISSION**

   Install and torque the bolts.

   Torque: 730 kg-cm (53 ft-lb, 27 N·m)

2. **INSTALL CROSSMEMBER**

   Install and torque the eight bolts and two nuts.

   Torque: bolt 400 kg-cm (29 ft-lb, 39 N·m)
   nut 600 kg-cm (43 ft-lb, 59 N·m)

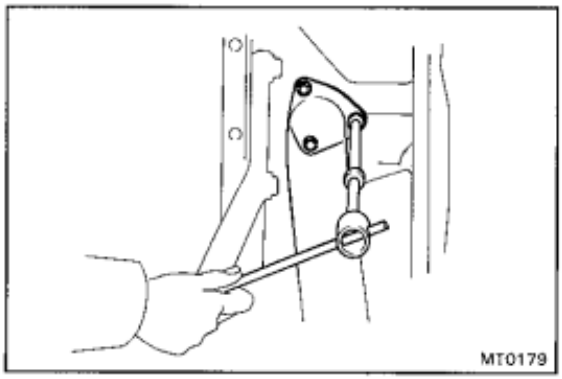

3. **INSTALL EXHAUST PIPE**

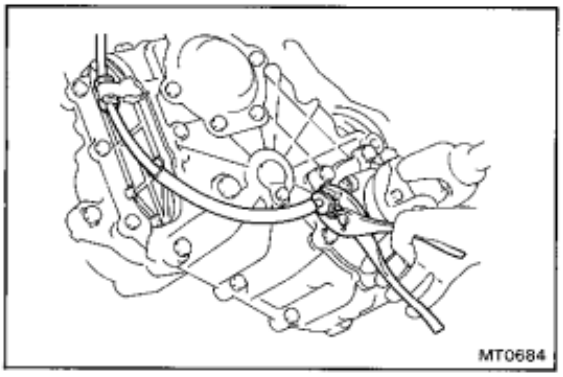

4. **INSTALL SPEEDOMETER CABLE**

   Using pliers, install the speedometer cable.

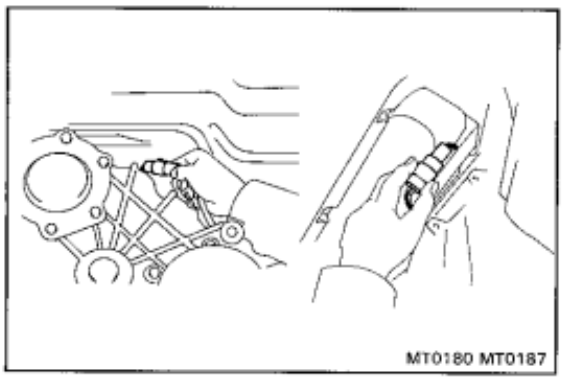

5. **(VACUUM SHIFT TYPE)**
   INSTALL L4 SWITCH CONNECTOR

6. **INSTALL 4WD AND BACK-UP LIGHT SWITCH**

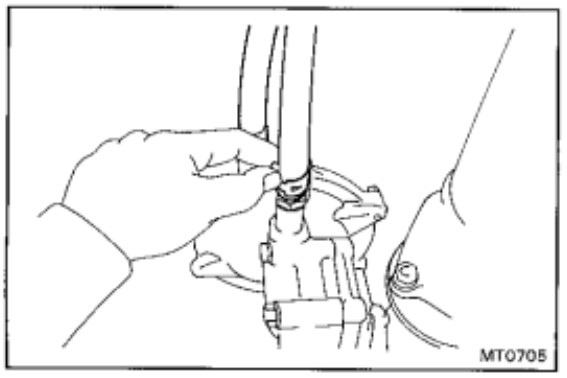

7. **(VACUUM SHIFT TYPE)**
   INSTALL VACUUM HOSE

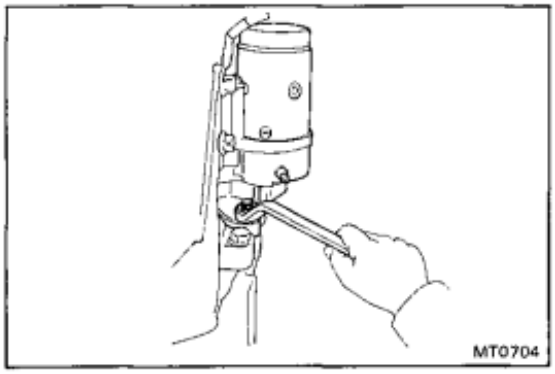

8. INSTALL STARTER

Install the bolt, nut and starter.

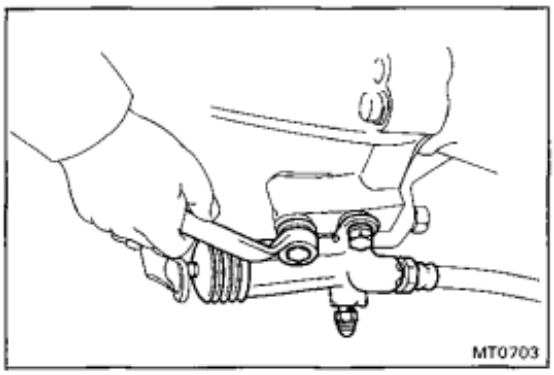

9. REMOVE CLUTCH RELEASE CYLINDER

(a) Install the clutch release cylinder.

(b) Install and torque the two bolts.

Torque: 120 kg-cm (9 ft-lb, 12 N·m)

10. INSTALL STIFFENER PLATE

(a) Install the stiffener plate.

(b) Install and torque the four bolts.

Torque: 700 kg-cm (51 ft-lb, 69 N·m)

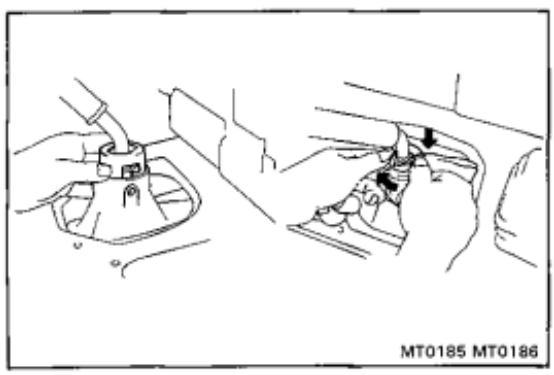

11. CONNECT PROPELLER SHAFT
(See page PR-2)

12. LOWER VEHICLE

13. INSTALL SHIFT LEVER

(a) Align the groove of the shift lever cap and the pin part of the case cover.

(b) Cover the shift lever cap with a cloth.

(c) Then, pressing down on the shift lever cap, rotate it clockwise to install.

(d) Install the shift lever boot with four bolts.

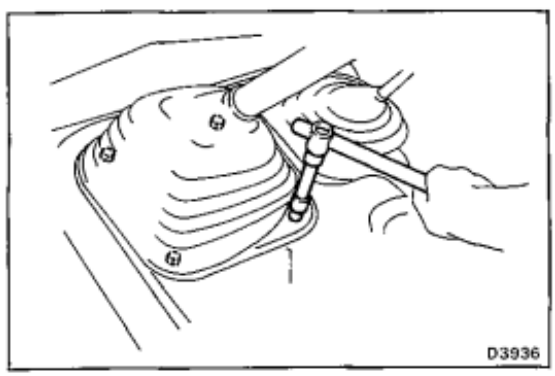

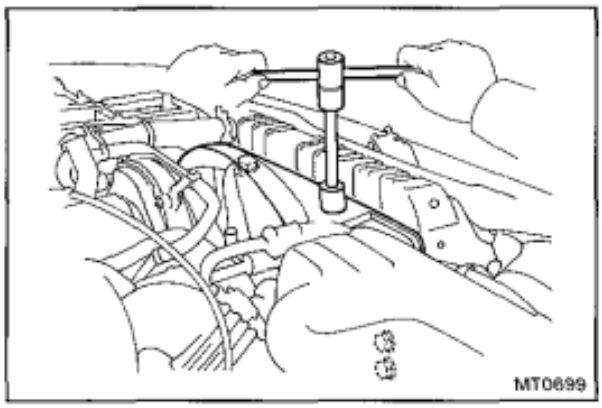

14. TIGHTEN FAN SHROUD SET BOLT

15. CONNECT BATTERY CABLE TO NEGATIVE TERMINAL

16. PERFORM ROAD TEST

Check for abnormal noise and smooth operation.

(H41 AND H55F TRANSMISSIONS) COMPONENTS

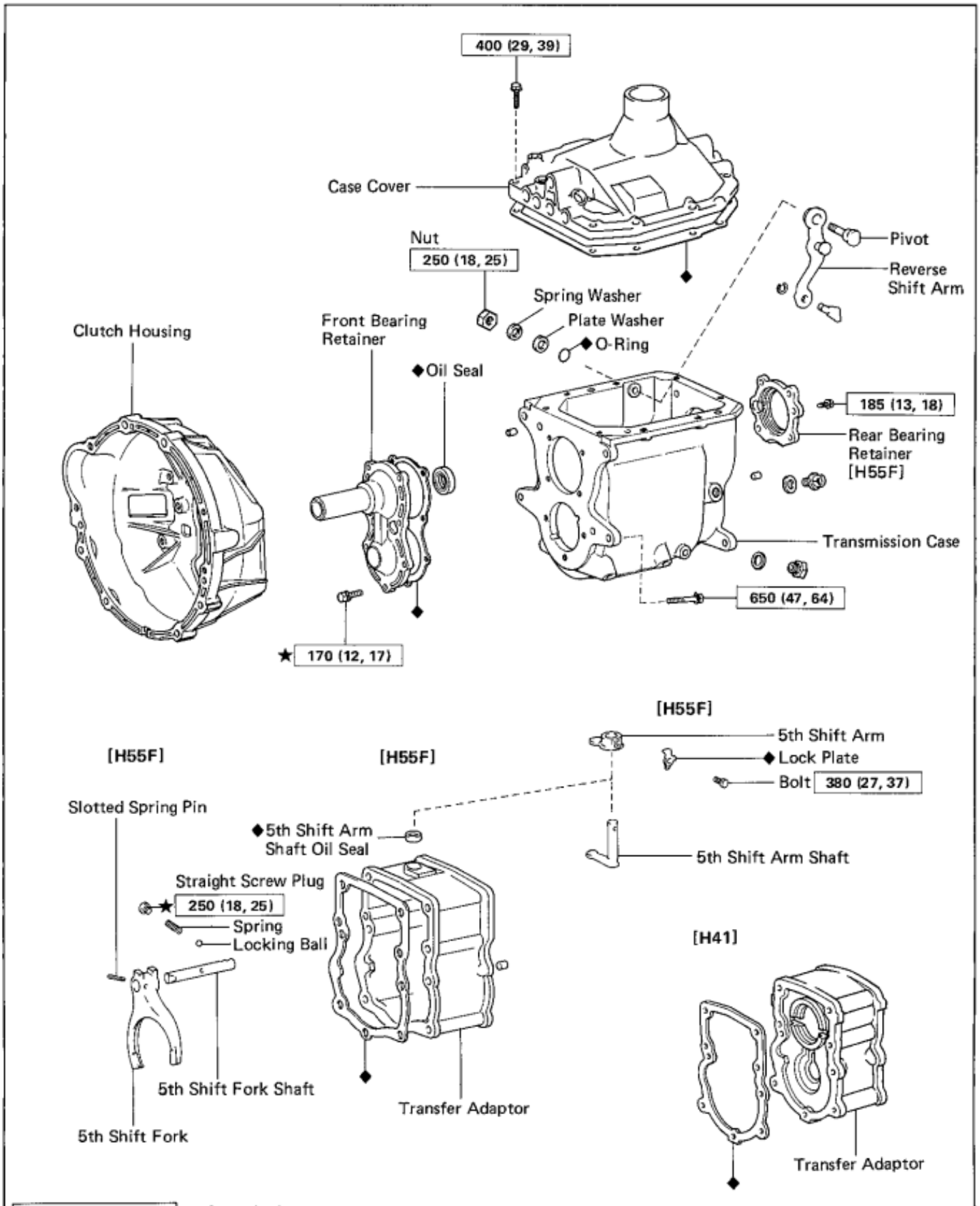

kg-cm (ft-lb, N·m) : Specified torque

◆ Non-reusable part

★ Precoated part

HM0166
HM0167
HM0265

COMPONENTS (Cont'd)

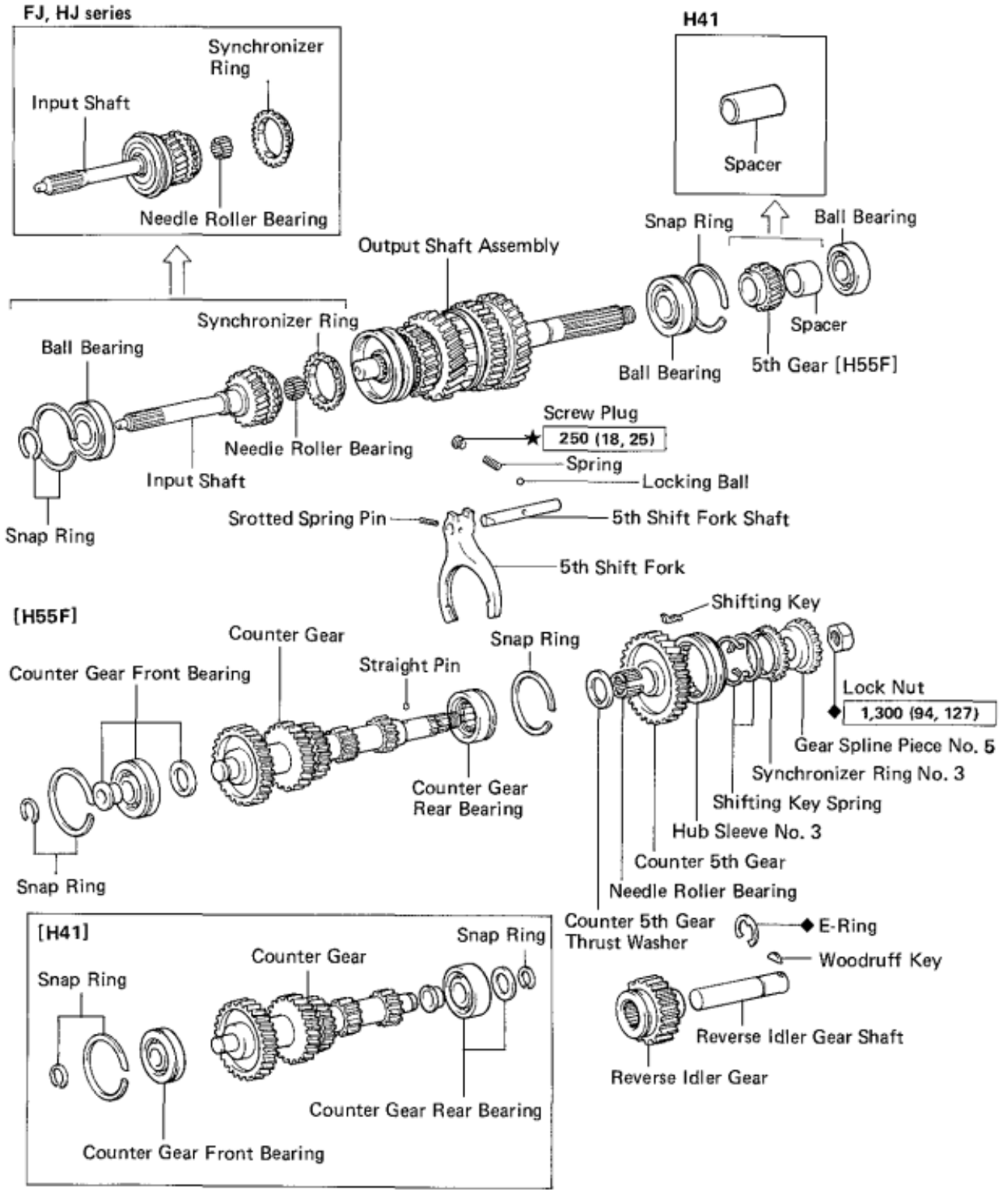

kg-cm (ft-lb, N·m) : Specified torque

◆ Non-reusable part

★ Precoated part

HM0338

DISASSEMBLY OF TRANSMISSION

(See pages MT-54, 55)

1. **REMOVE CLUTCH HOUSING**

2. **REMOVE TRANSFER**
(See page TF-4)

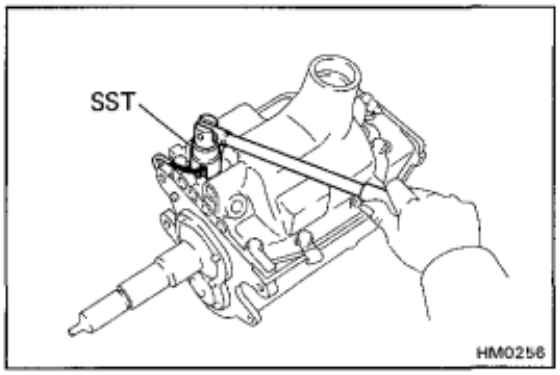

3. **REMOVE BACK-UP LIGHT SWITCH**

Using SST, remove the back-up light switch.

SST 09817-16011

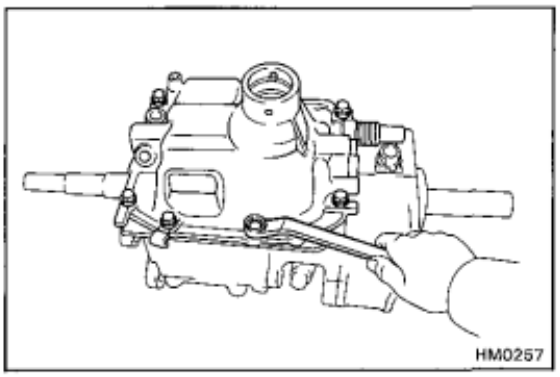

4. **REMOVE CASE COVER**

(a) Remove the case cover and gasket.

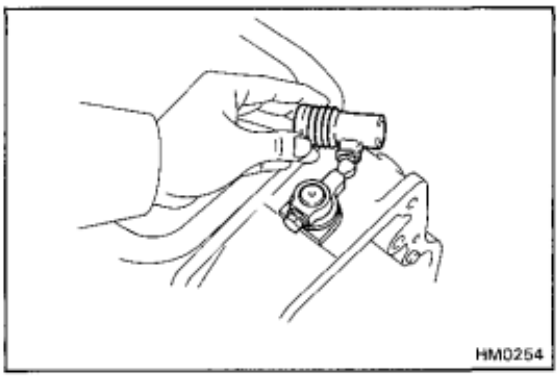

(b) (H55F)
Remove the dust boot.

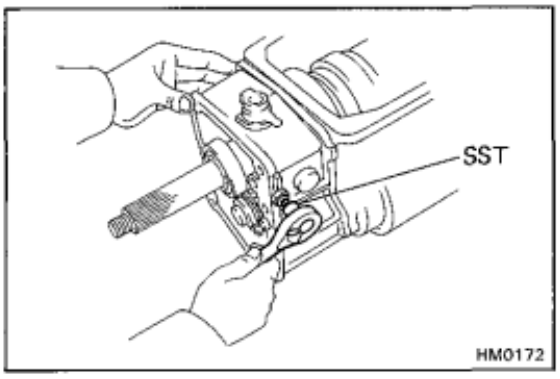

5. **(H55F)**
REMOVE FIFTH LOCKING BALL AND SPRING

(a) Using SST, remove the screw plug.

SST 09313-30021

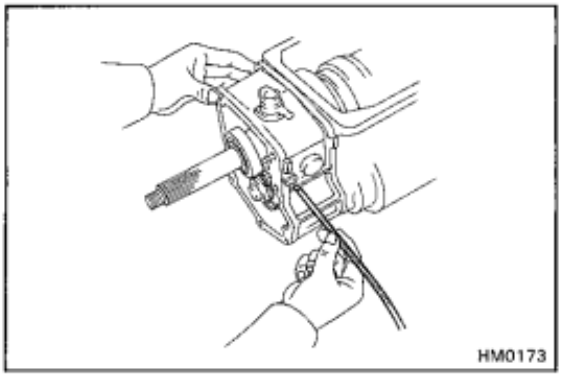
HM0173

(b) Using a magnetic finger, remove the locking ball and spring.

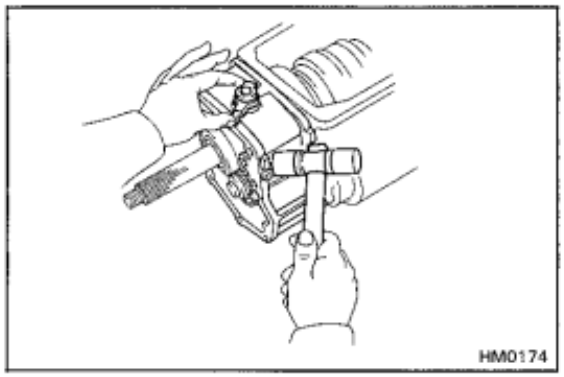
HM0174

6. REMOVE TRANSFER ADAPTOR

(a) Using a plastic hammer, carefully tap the transfer adaptor.

(b) Pull up fifth shift arm and pull the transfer adaptor from the transmission case.

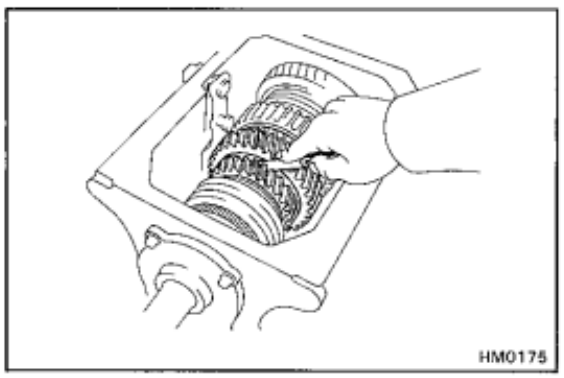
HM0175

7. MEASURE EACH GEAR THRUST CLEARANCE

Using a feeler gauge, measure the thrust clearance of each gear.

HINT: For later reference, write down the thrust clearance.

Standard clearance:

1st and 2nd gears	**0.175 — 0.325 mm (0.0069 — 0.0128 in.)**
3rd gear	**0.125 — 0.275 mm (0.0049 — 0.0108 in.)**
Counter 5th gear	**0.10 — 0.30 mm (0.0039 — 0.0118 in.)**

Maximum clearance:

1st and 2nd gears	**0.35 mm (0.0138 in.)**
3rd and counter 5th gears	**0.30 mm (0.0118 in.)**

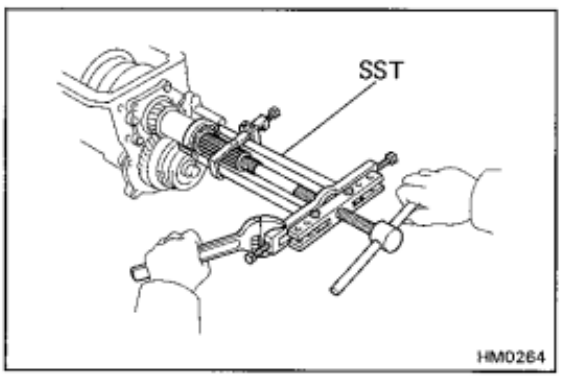

HM0264

8. REMOVE OUTPUT SHAFT REAR BEARING

Using SST, remove the rear bearing.

SST 09950-20017

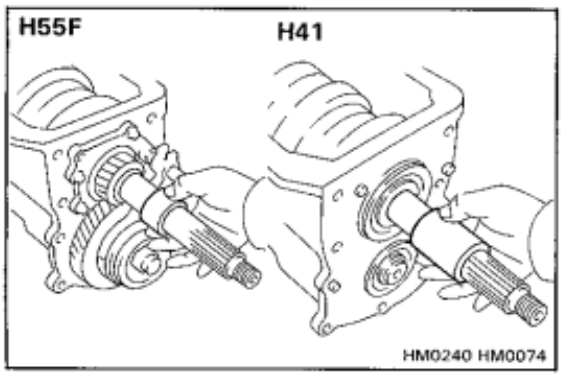

HM0240 HM0074

9. REMOVE SPACER

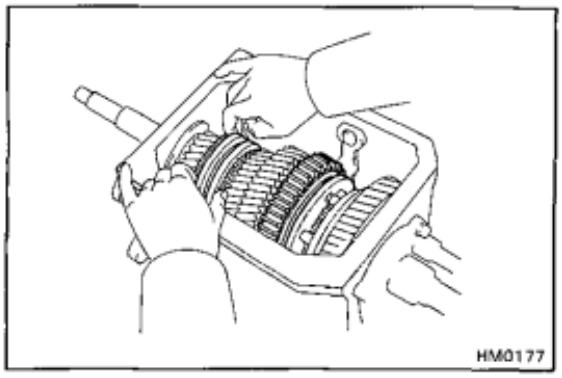

10. (H55F)
REMOVE COUNTER GEAR REAR LOCK NUT

(a) Engage the gear double meshing.

(b) Unstake the lock nut.

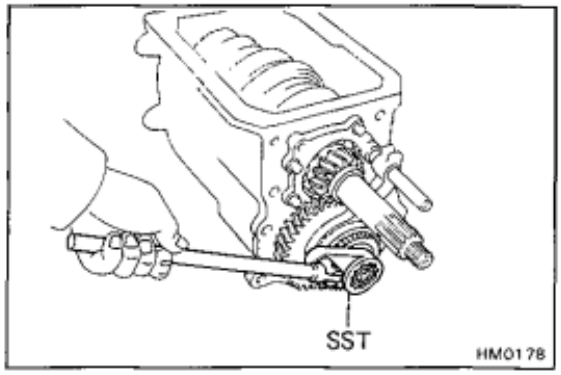

(c) Using SST, remove the lock nut.

SST 09326-20011

(d) Disengage the gear double meshing.

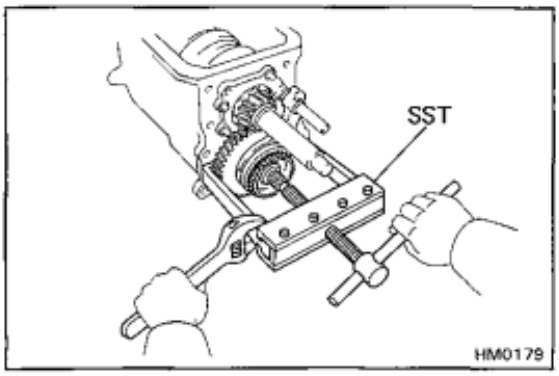

11. (H55F)
REMOVE GEAR SPLINE PIECE NO.5, COUNTER FIFTH GEAR ASSEMBLY AND FIFTH SHIFT FORK

Using SST, pull the counter fifth gear out of the counter gear rear end with gear spline piece No.5 and the fifth shift fork.

SST 09213-27010

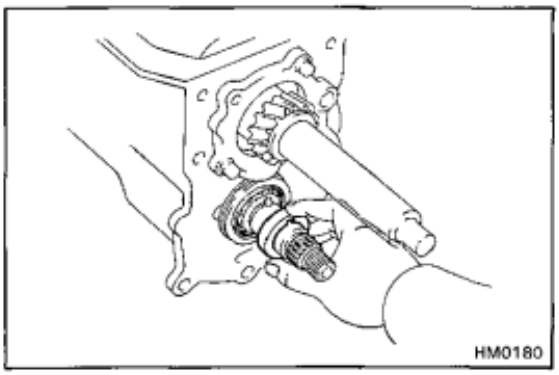

12. (H55F)
REMOVE STRAIGHT PIN AND COUNTER FIFTH GEAR THRUST WASHER

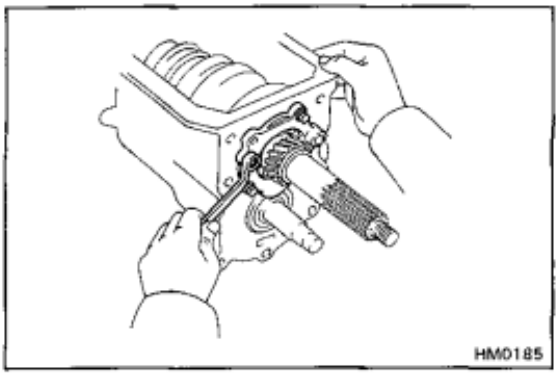

13. (H55F)
REMOVE REAR BEARING RETAINER

Remove the four bolts and rear bearing retainer.

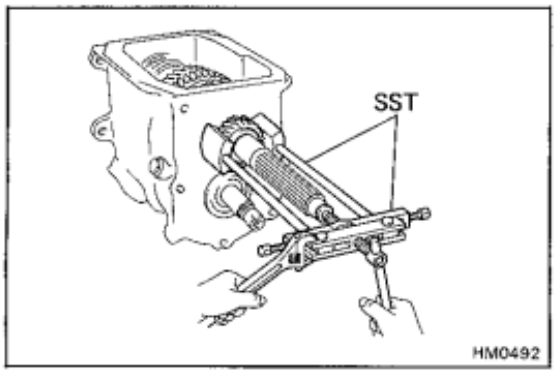

14. (H55F)
REMOVE FIFTH GEAR FROM OUTPUT SHAFT

Using SST, remove the fifth gear from the output shaft.

SST 09336-60010, 09950-20017

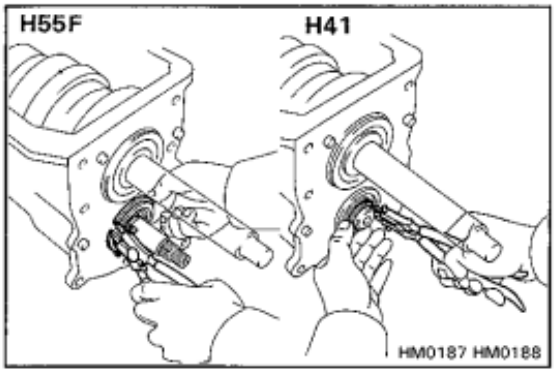

15. REMOVE COUNTER GEAR SHAFT REAR BEARING

(a) Using snap ring pliers, remove the snap ring.

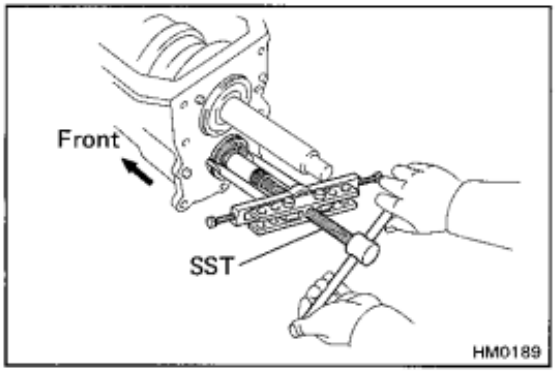

(b) Using SST, remove the counter gear rear bearing.

SST 09950-20017

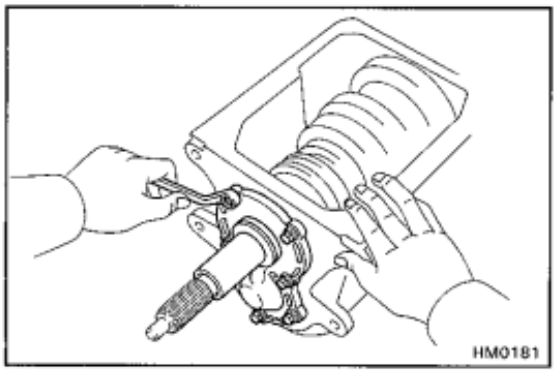

16. REMOVE FRONT BEARING RETAINER

HINT: Be careful not to damage the oil seal.

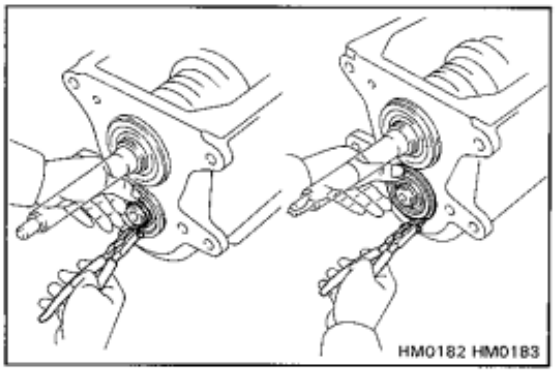

17. REMOVE COUNTER GEAR FRONT BEARING

(a) Using snap ring pliers, remove the two snap rings.

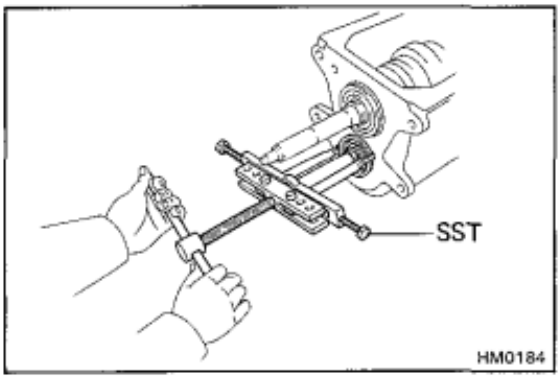

(b) Using SST, remove the counter gear front bearing.

SST 09950-20017

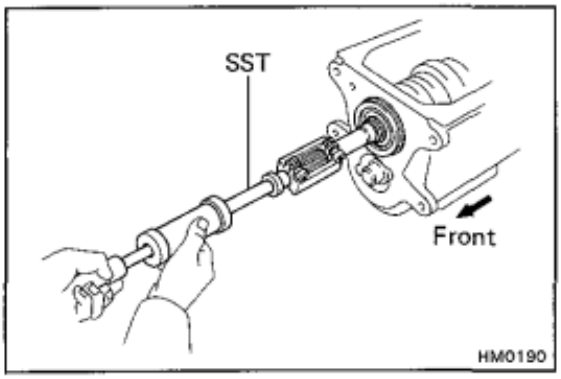

18. (FJ, HJ series)
REMOVE INPUT SHAFT AND BEARING

(a) Using SST, remove the input shaft and bearing.

SST 09910-00015 (09911-00011, 09912-00010)

HINT: Insure that the input shaft and counter gear do not strike against each other.

Be careful not to loose the 17 needle roller bearings.

(b) Remove the synchronizer ring.

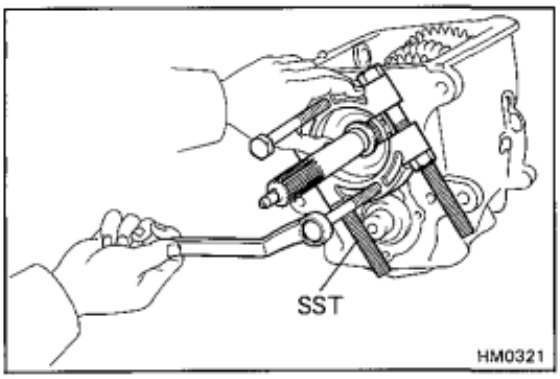

(BJ series)
REMOVE INPUT SHAFT AND BEARING

(a) Using snap ring pliers, remove the snap ring of bearing inner.

(b) Set the SST to the snap ring groove, and using two bolts, remove the input shaft and bearing.

SST 09950-00020

HINT:

- Use steel plates etc. (approx. 2 mm thick) as a backplate to prevent the case from being damaged by the bolts.
- Tighten the two bolts evenly.
  Use bolts with a 12 mm nominal diameter, 1.5 pitch, and approx. 60 mm thread length.
  (Reference: Part No.90101-12034)

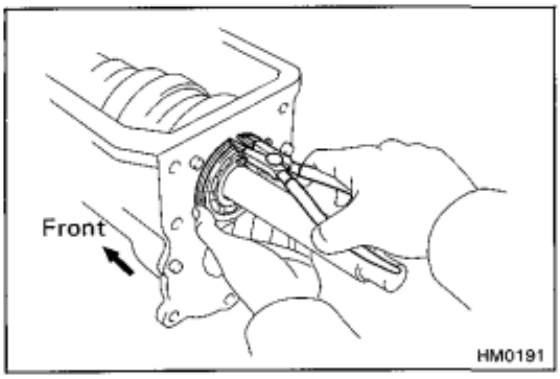

19. REMOVE OUTPUT SHAFT CENTER BEARING

(a) Using snap ring pliers, remove the snap ring.

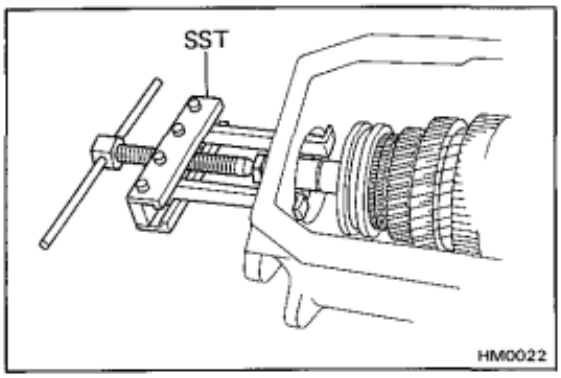

(b) Using SST, support the output shaft front end.

SST 09213-27010

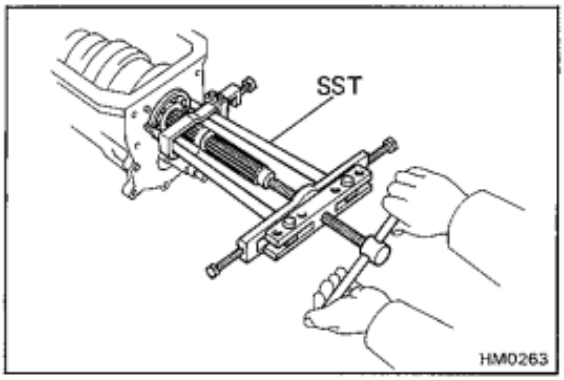

(c) Using SST, remove the center bearing.

SST 09950-20017

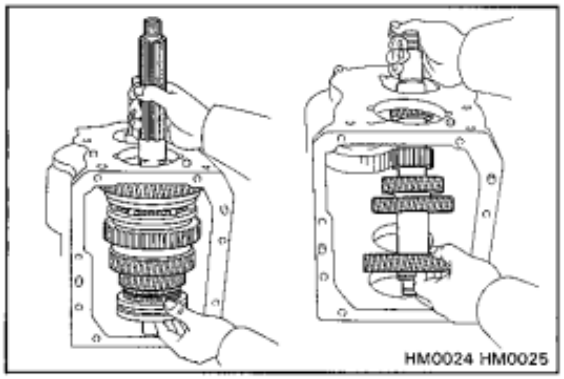

20. REMOVE OUTPUT SHAFT AND COUNTER GEAR

(a) Stand the transmission case on its front end.

(b) Remove the output shaft.

(c) Remove the counter gear.

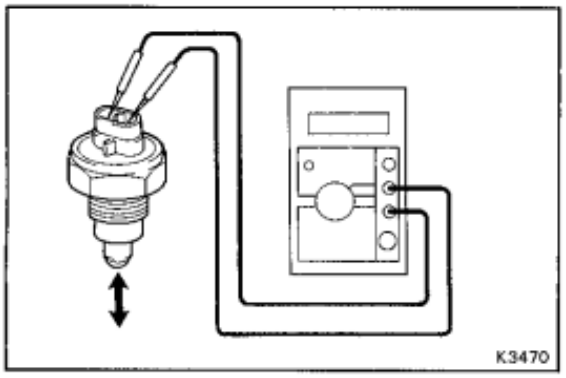

21. INSPECT BACK-UP LIGHT SWITCH

Check that there is continuity between terminals as shown.

Switch Position	Specified
Push	Continuity
Free	No continuity

If operation is not as specified, replace switch.

COMPONENT PARTS

Input Shaft Assembly

COMPONENTS

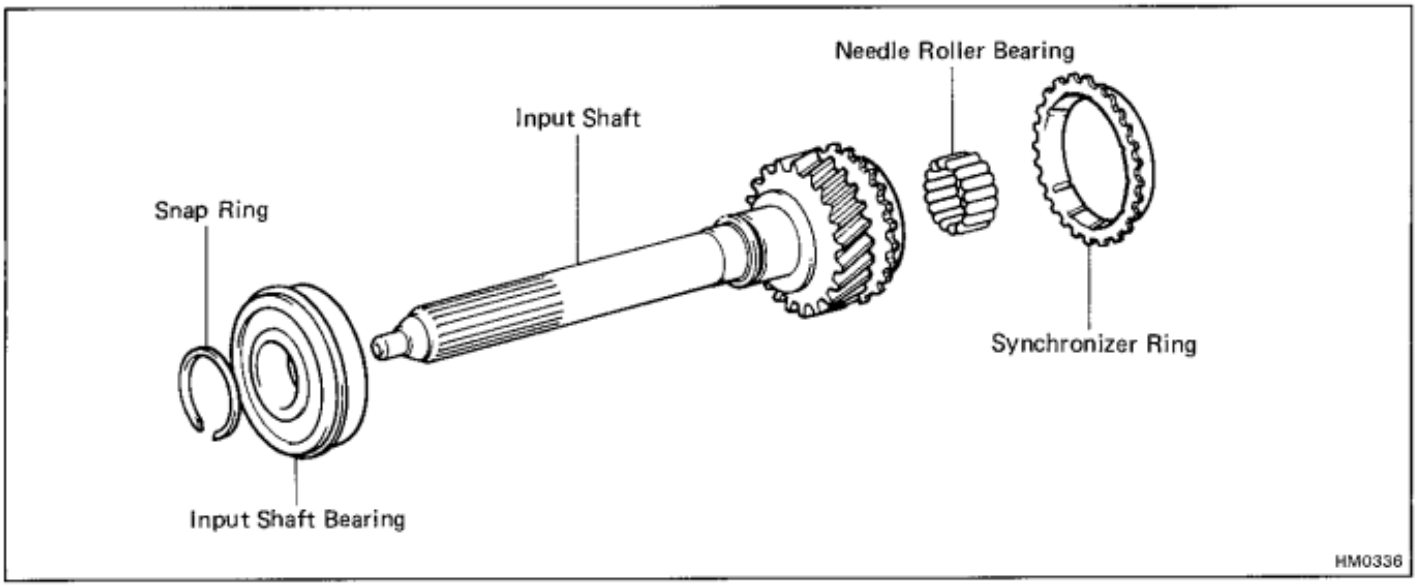

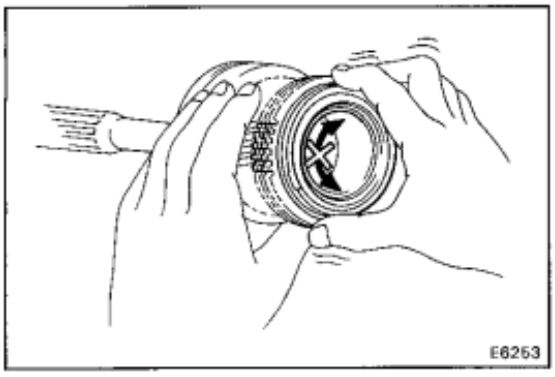

INSPECTION OF INPUT SHAFT ASSEMBLY

INSPECT SYNCHRONIZER RING

(a) Turn the ring and push it into check braking action.

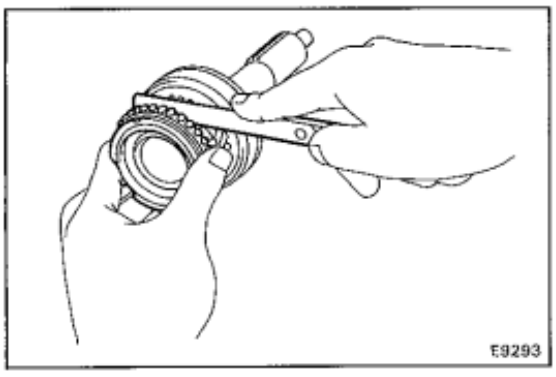

(b) Measure the clearance between the synchronizer ring back and the gear spline end.

Standard clearance: **1.1 — 1.9 mm (0.0433 — 0.0748 in.)**

Minimum clearance: **1.0 mm (0.0394 in.)**

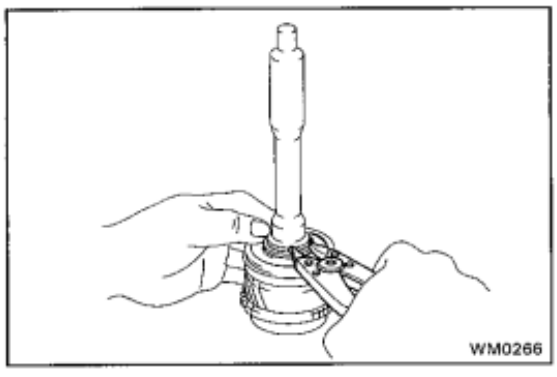

REPLACEMENT OF BEARING

IF NECESSARY, REPLACE INPUT SHAFT BEARING

(a) Using snap ring pliers, remove the snap ring.

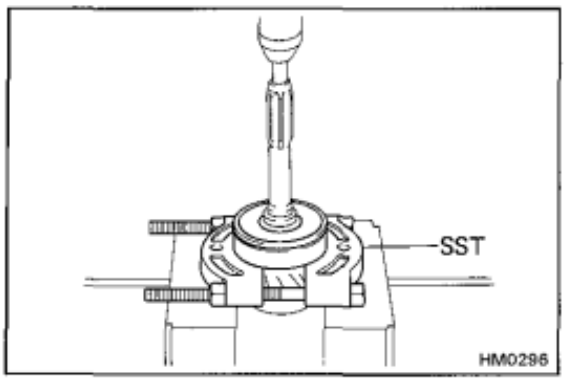

(b) Using SST and a press, remove the bearing.
SST 09950-00020

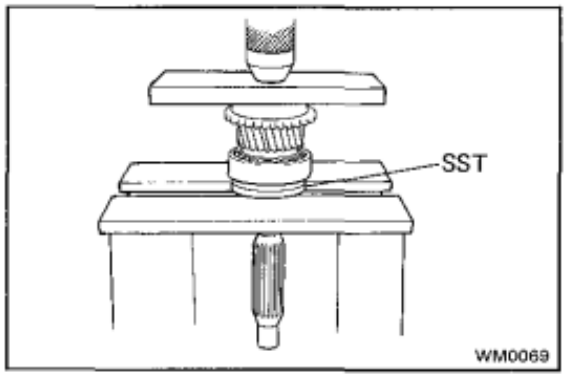

(c) Using SST and a press, install a new bearing.
SST 09316-60010 (09316-00040)
NOTICE: Do not press in the bearing outer race.

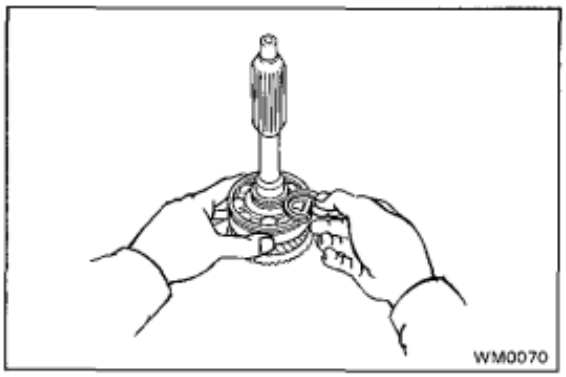

(d) *Select a snap ring that will allow minimum axial play.*
Standard clearance: 0 — 0.10 mm (0 — 0.0039 in.)

Thickness mm (in.)
3.20 — 3.31 (0.1260 — 0.1303)
3.31 — 3.42 (0.1303 — 0.1346)

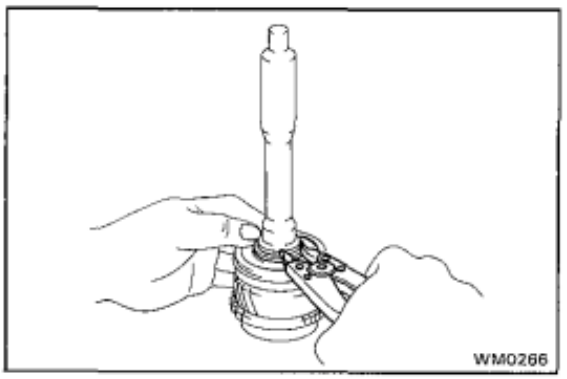

(e) Using snap ring pliers, install the snap ring.

Output Shaft Assembly

COMPONENTS

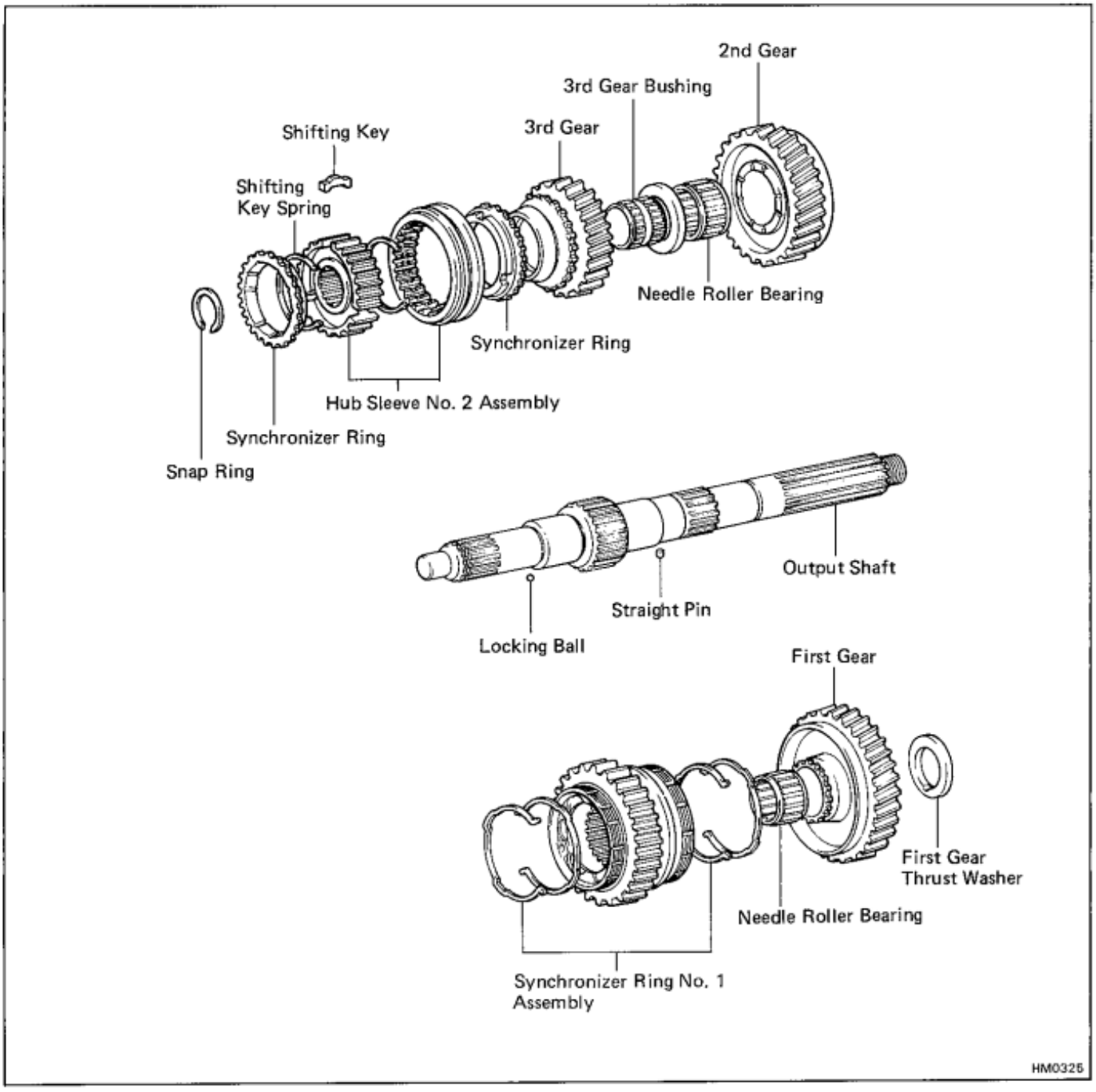

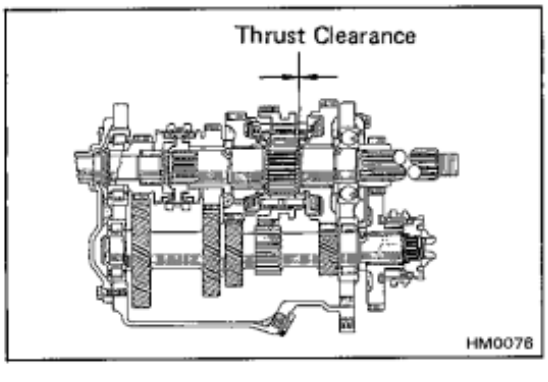

DISASSEMBLY OF OUTPUT SHAFT ASSEMBLY

1. MEASURE EACH GEAR THRUST CLEARANCE

Standard clearance:

1st and 2nd gears	**0.175 — 0.320 mm (0.0069 — 0.0126 in.)**
3rd gear	**0.125 — 0.270 mm (0.0049 — 0.0106 in.)**

Maximum clearance:

1st and 2nd gears	**0.35 mm (0.0138 in.)**
3rd gear	**0.30 mm (0.0118 in.)**

If clearance is more than the limit, replace the gear, needle roller bearing or shaft.

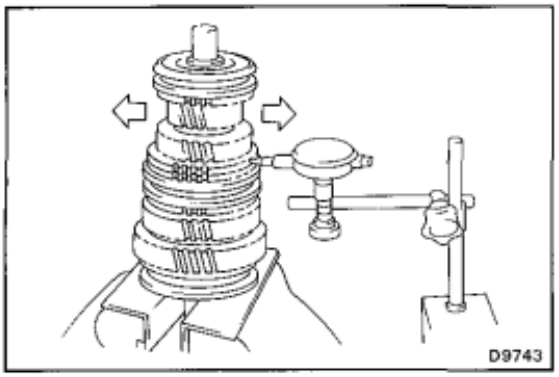

2. MEASURE EACH GEAR OIL CLEARANCE

Standard clearance:

1st and 2nd gears	**0.020 — 0.073 mm (0.0008 — 0.0029 in.)**
3rd gear	***0.065 — 0.115 mm (0.0020 — 0.0045 in.)***

Maximum clearance:

1st and 2nd gears	**0.08 mm (0.0031 in.)**
3rd gear	**0.12 mm (0.0047 in.)**

If clearance is more than the limit, replace the gear, needle roller bearing or shaft.

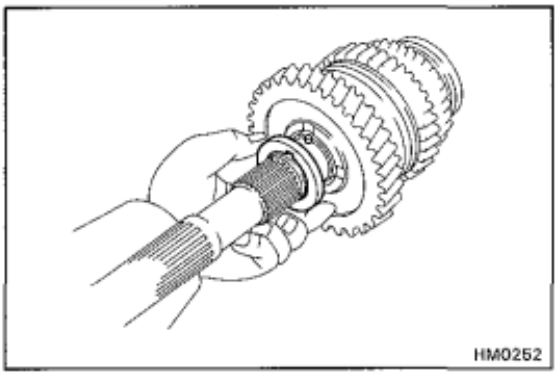

3. REMOVE FIRST GEAR

(a) Remove the first gear thrust washer.

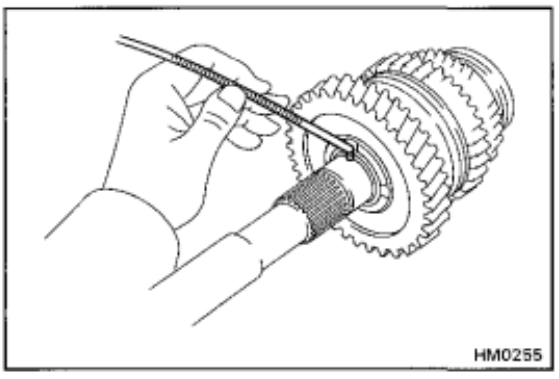

(b) Using a magnetic finger, remove the straight pin.

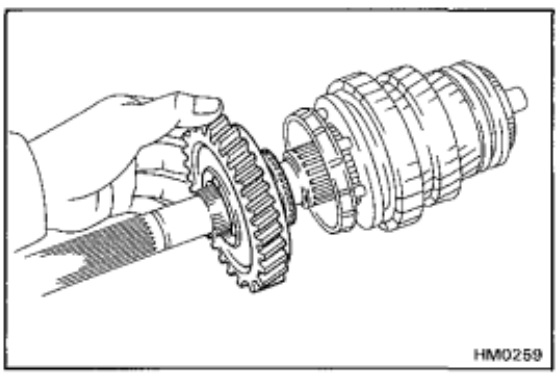

(c) Remove the first gear.

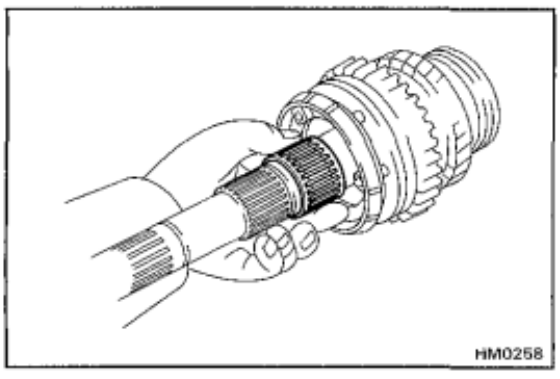

(d) Remove the needle roller bearing.

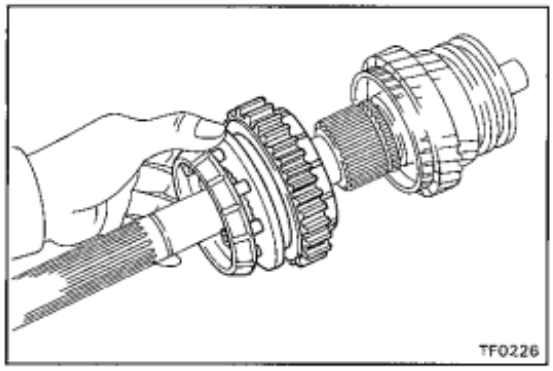

4. REMOVE SYNCHRONIZER RING NO.1 ASSEMBLY

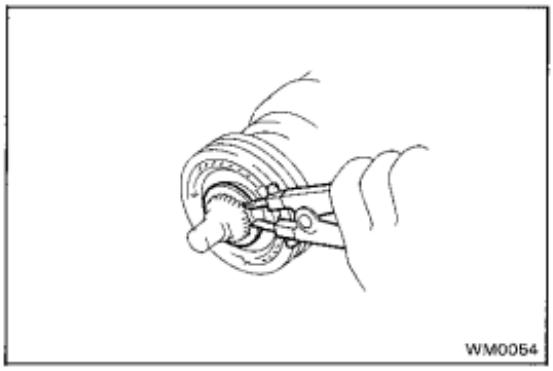

5. REMOVE HUB SLEEVE NO.2 ASSEMBLY, SYNCHRONIZER RING, THIRD GEAR, THIRD GEAR BUSHING, NEEDLE ROLLER BEARING AND SECOND GEAR FROM OUTPUT SHAFT

(a) Using snap ring pliers, remove the snap ring.

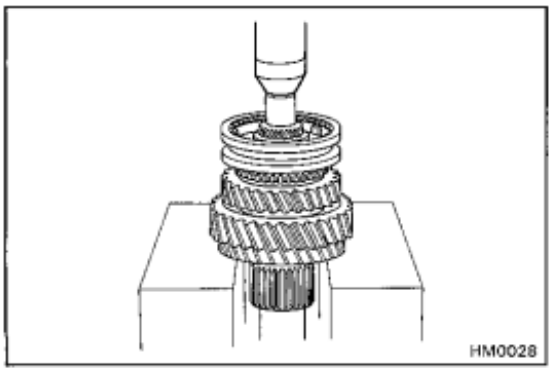

(b) Using a press, remove the hub sleeve No.2 assembly, synchronizer ring, third gear, third gear bushing, needle roller bearing and second gear.

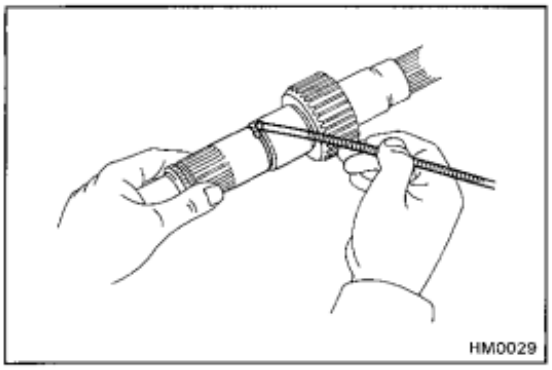

6. REMOVE LOCKING BALL

Using a magnetic finger, remove the locking ball.

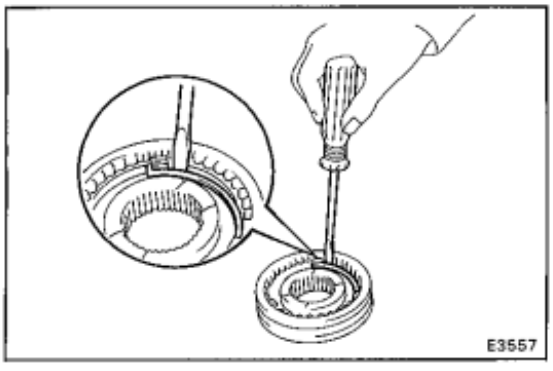

7. REMOVE HUB SLEEVE NO.2, SHIFTING KEYS AND SPRINGS FROM CLUTCH HUB NO.2

Using a screwdriver, remove the two shifting key springs, three shifting keys and hub sleeve No.2 from clutch hub No.2.

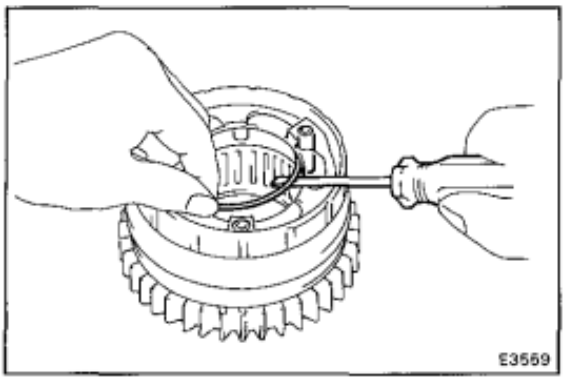

8. REMOVE SYNCHRONIZER RINGS OF FIRST AND SECOND GEARS

Remove the four synchronizer ring holders from synchronizer ring No.1.

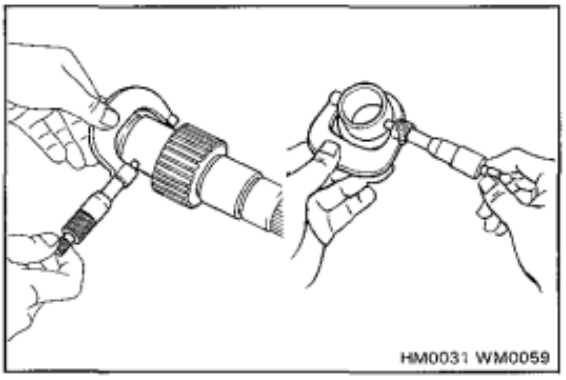

INSPECTION OF OUTPUT SHAFT ASSEMBLY

1. INSPECT OUTPUT SHAFT AND BUSHING

(a) Check the output shaft and bushing for wear or damage.

(b) Using a micrometer, measure the outer diameter of the output shaft journal and bushing.

Minimum diameter

1st and 2nd gear journal	**43.984 mm (1.7317 in.)**
Bushing	**47.910 mm (1.8862 in.)**

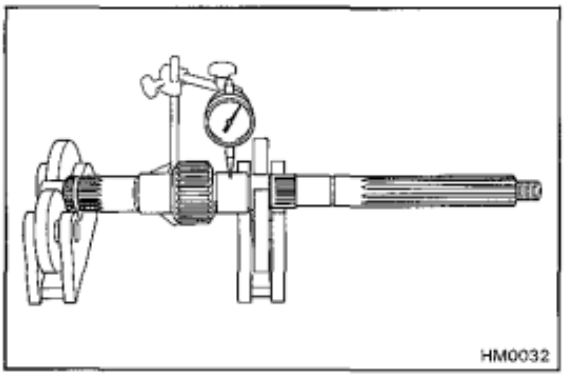

(c) Using a dial indicator, measure the shaft runout.

Maximum runout: 0.03 mm (0.0012 in.)

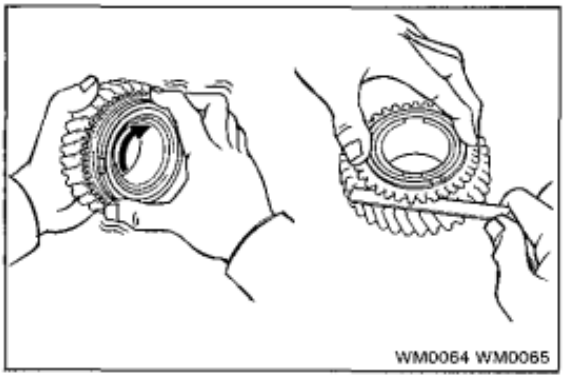

2. INSPECT SYNCHRONIZER RINGS OF THIRD GEAR, AND GEAR SPLINE PIECE NO.5

(a) Check the synchronizer rings for wear or damage.

(b) Turn the ring and push it into check the braking action.

(c) Measure the clearance between the synchronizer ring back and gear spline end.

Minimum clearance: 0.8 mm (0.031 in.)

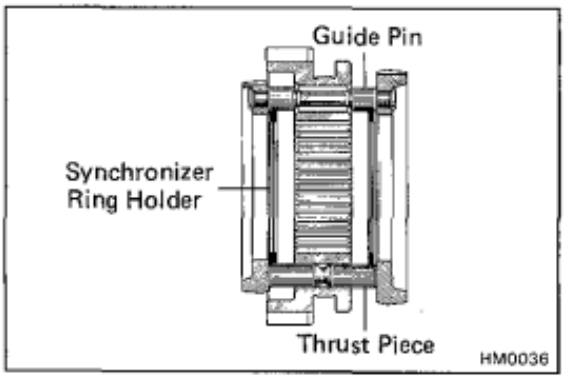

3. INSPECT SYNCHRONIZER RINGS OF FIRST AND SECOND GEARS

(a) Check the inner spline for wear or damage.

(b) Check the raised position of the guide pins for wear or damage.

(c) Check the thrust pieces and gear moving parts for wear or damage.

(d) Check the guide pin rivet staked parts for play or damage.

(e) Check the synchronizer ring holders for deterioration or wear.

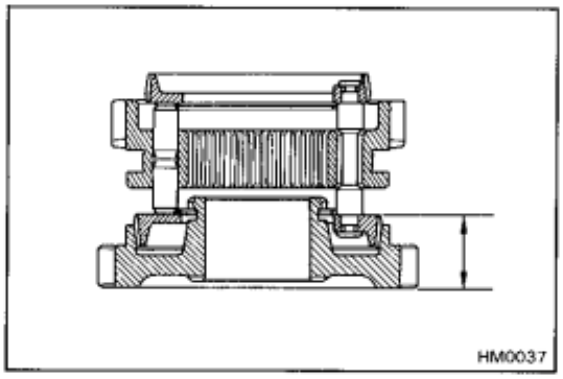

(f) With the synchronizer ring pressed into the gear, measure the distance as shown.

Minimum distance:

1st gear 32.5 mm (1.280 in.)
2nd gear 38.0 mm (1.496 in.)

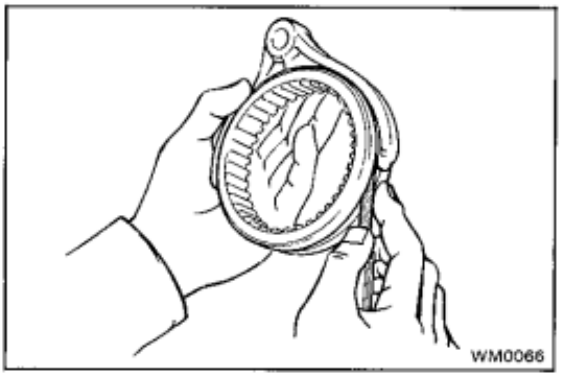

4. INSPECT SHIFT FORKS AND HUB SLEEVES

(a) Check the contact surfaces for wear or damage.

(b) Measure the clearance between the hub sleeve and shift fork.

Maximum clearance: 0.8 mm (0.031 in.)

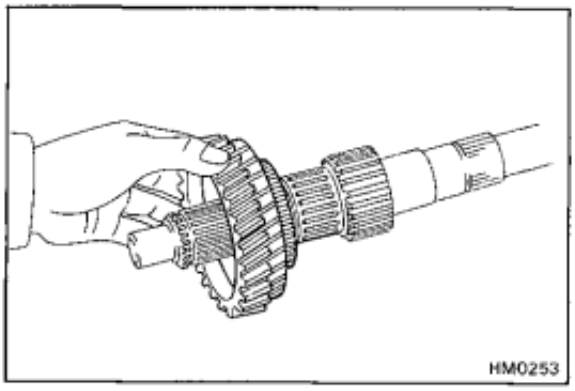

ASSEMBLY OF OUTPUT SHAFT ASSEMBLY

1. INSTALL SECOND GEAR AND NEEDLE ROLLER BEARING

(a) Apply gear oil to the output shaft and needle roller bearing.

(b) Install the needle roller bearing and second gear.

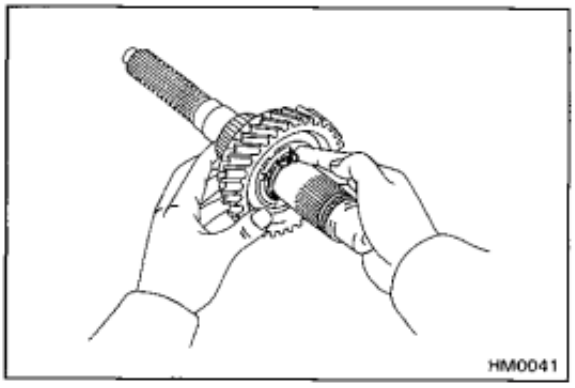

2. INSTALL LOCKING BALL, BUSHING AND THIRD GEAR

(a) Install the locking ball in the shaft.

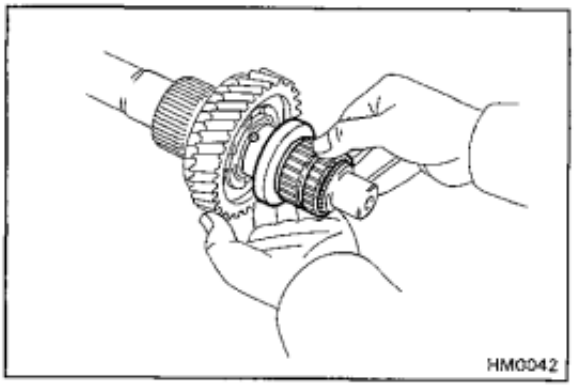

(b) Install the bushing on the output shaft.

(c) Apply gear oil to the bushing.

(d) Install the third gear on the bushing.

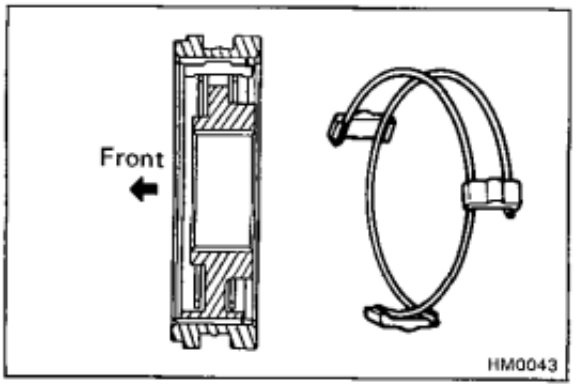

3. INSERT CLUTCH HUB NO.2 INTO HUB SLEEVE

Install the clutch hub and shifting keys to the hub sleeve.

HINT: Install the shifting key springs positioned so that their ends are not in line.

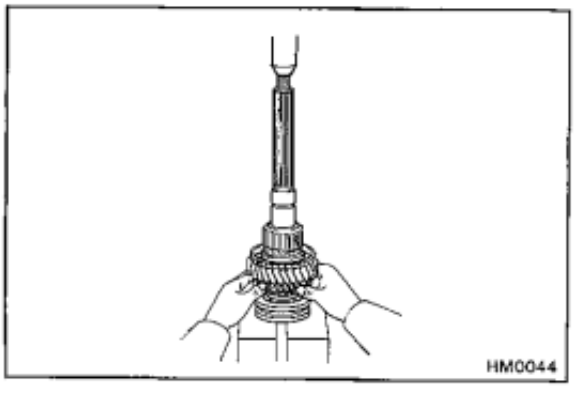

4. INSTALL HUB SLEEVE NO.2 ASSEMBLY

Using a press, install the hub sleeve No.2 assembly.

NOTICE: Hold the third gear to prevent the bushing from falling. Be sure that the shifting keys align with the synchronizer ring slots.

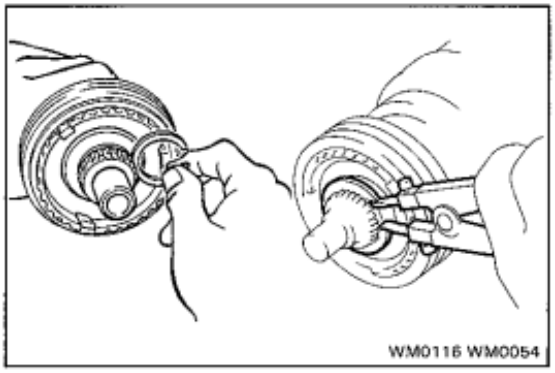
WM0116 WM0054

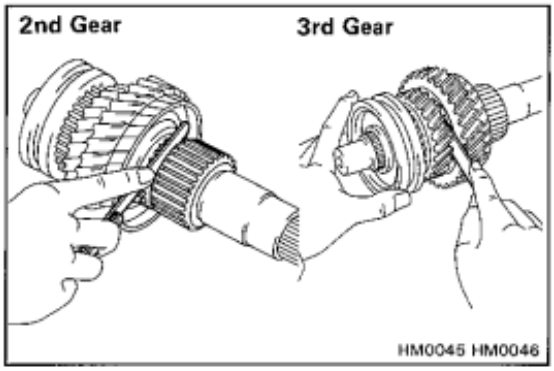

HM0045 HM0046

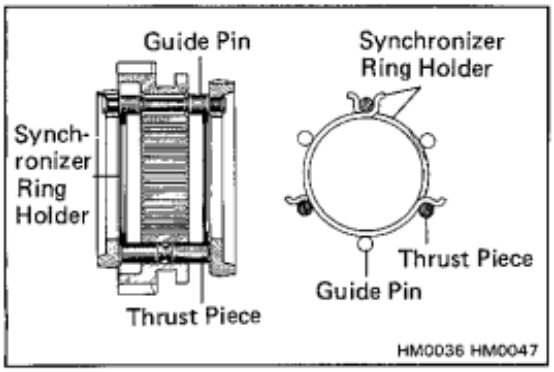

HM0036 HM0047

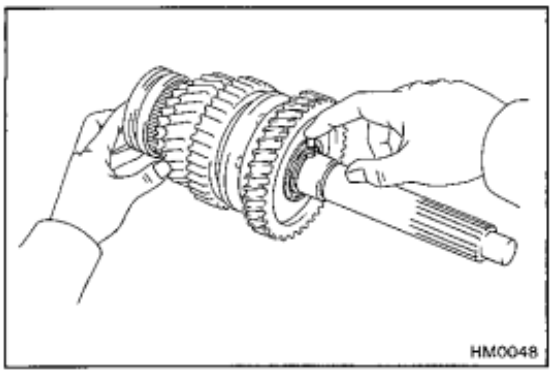
HM0048

5. INSTALL SNAP RING

Select a snap ring that will allow minimum axial play and install it on the shaft.

Snap ring thickness

Mark	Thickness mm (in.)
0	2.40 — 2.45 (0.0945 — 0.0965)
1	2.45 — 2.50 (0.0965 — 0.0984)
2	2.50 — 2.55 (0.0984 — 0.1004)
3	2.55 — 2.60 (0.1004 — 0.1024)
4	2.60 — 2.65 (0.1024 — 0.1043)
5	2.65 — 2.70 (0.1043 — 0.1063)

6. MEASURE THRUST CLEARANCE OF SECOND AND THIRD GEAR

Using a feeler gauge, measure the second and third gear thrust clearances.

Standard clearance:

2nd gear
0.175 — 0.320 mm (0.0069 — 0.0126 in.)
3rd gear
0.125 — 0.270 mm (0.0049 — 0.0106 in.)

Maximum clearance:

2nd gear 0.35 mm (0.0138 in.)
3rd gear 0.30 mm (0.0118 in.)

7. ASSEMBLE SYNCHRONIZER RING HOLDER

Hook the synchronizer ring holder ends to the thrust piece.

HINT:

- Align the synchronizer ring holder ends so they are not both facing in the same direction.
- Be sure the synchronizer ring holders are parallel and not intersecting.

8. INSTALL SYNCHRONIZER RING NO.1 AND FIRST GEAR

(a) Install synchronizer ring No.1.

(b) Apply gear oil to the needle roller bearing.

(c) Install the needle roller bearing and the first gear.

(d) Apply MP grease to the straight pin and first gear thrust washer.

(e) Install the first gear thrust washer onto the output shaft with the straight pin aligned with the first gear thrust washer.

Counter Gear Assembly

COMPONENTS

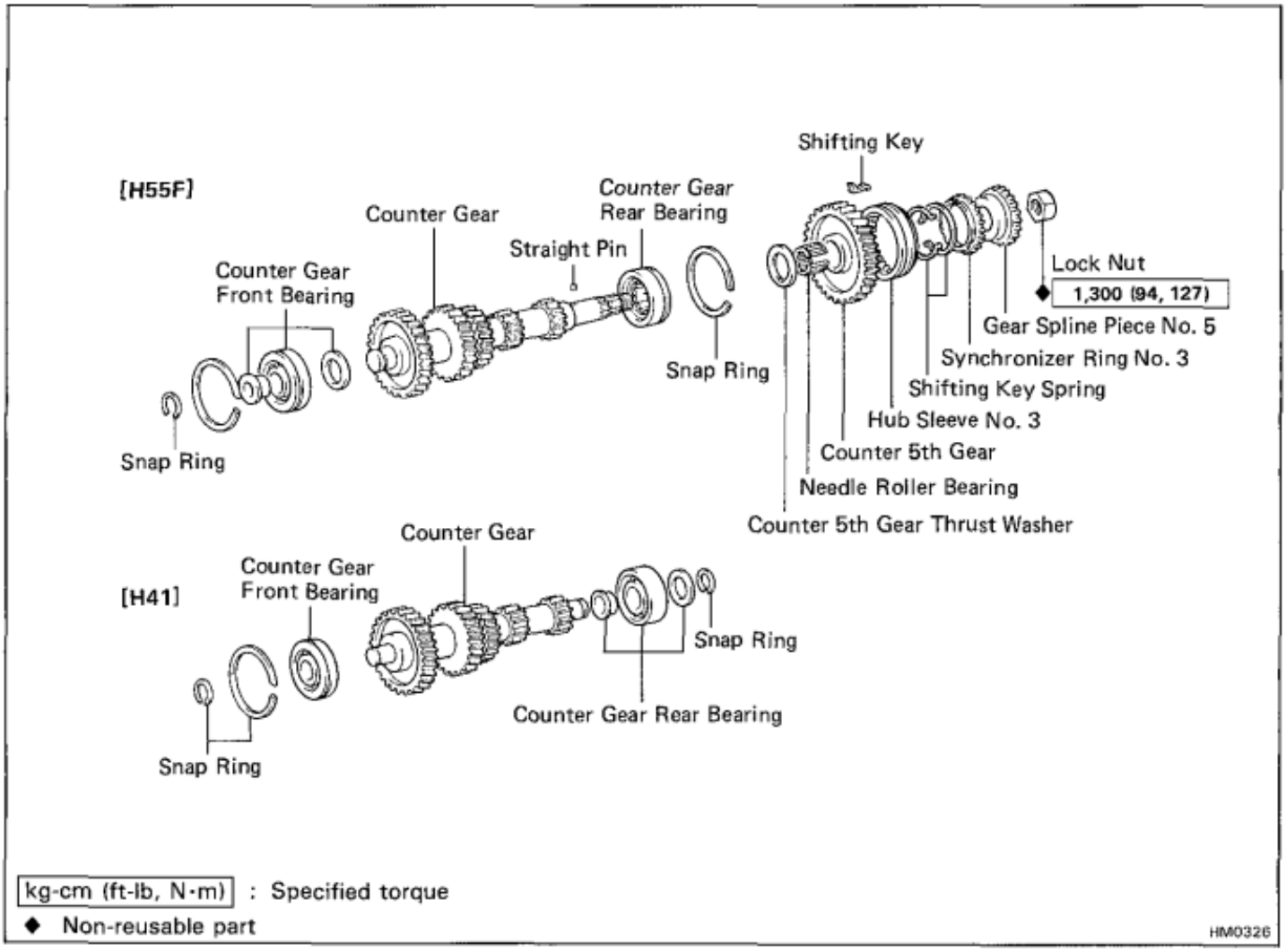

kg-cm (ft-lb, N·m) : Specified torque

◆ Non-reusable part

HM0326

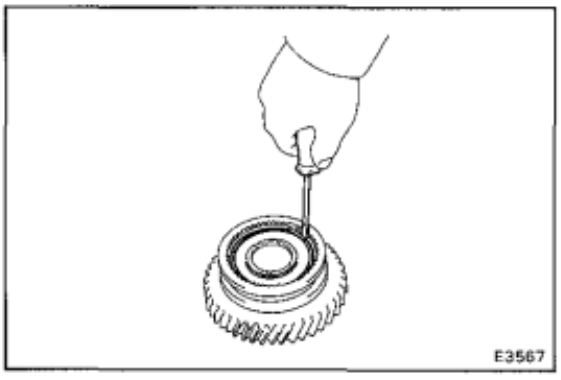

DISASSEMBLY OF COUNTER GEAR ASSEMBLY

REMOVE HUB SLEEVE NO.3, SHIFTING KEYS AND SPRINGS

Using a screwdriver, remove two springs, hub sleeve No.3 and three shifting keys.

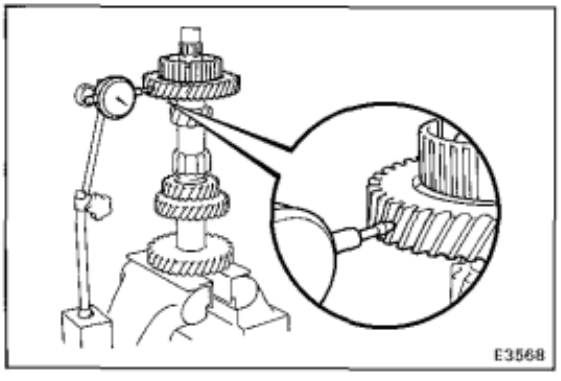

INSPECTION OF COUNTER GEAR ASSEMBLY

1. MEASURE COUNTER FIFTH GEAR OIL CLEARANCE

Using a dial indicator, measure counter fifth gear oil clearance.

Standard clearance: **0.015 — 0.068 mm (0.0006 — 0.0027 in.)**

Maximum clearance: **0.1 mm (0.0039 in.)**

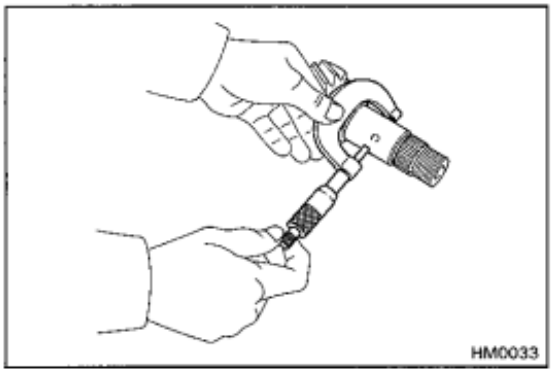

2. **INSPECT COUNTER GEAR AND BEARING**

(a) Check the gear teeth for wear or damage.

(b) Check the bearings for wear or damage.

(c) (H55F)
Using a micrometer, measure the outer diameter of the counter gear journal.

Minimum diameter:

Counter 5th gear journal	**31.984 mm (1.2592 in.)**
Rear bearing journal	**39.957 mm (1.5731 in.)**

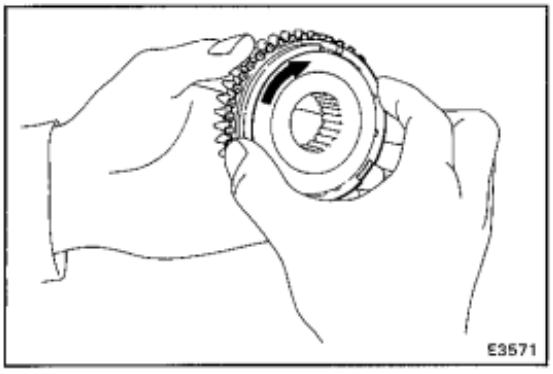

3. **INSPECT SYNCHRONIZER RING**

(a) Turn the ring and push it into check the braking action.

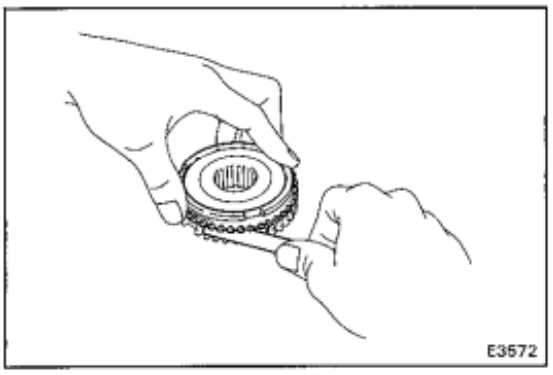

(b) Measure the clearance between the synchronizer ring back and the gear spline end.

Standard clearance: **0.9 — 1.5 mm (0.0354 — 0.0591 in.)**

Minimum clearance: **0.8 mm (0.0315 in.)**

If the clearance less than the limit, replace the gear, needle roller bearing or shaft.

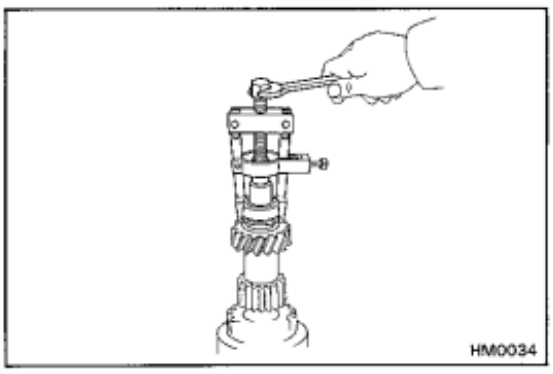

4. **(H41)**
IF NECESSARY REPLACE COUNTER REAR BEARING INNER RACE

(a) Using SST, remove the bearing inner race.

SST 09602-10010

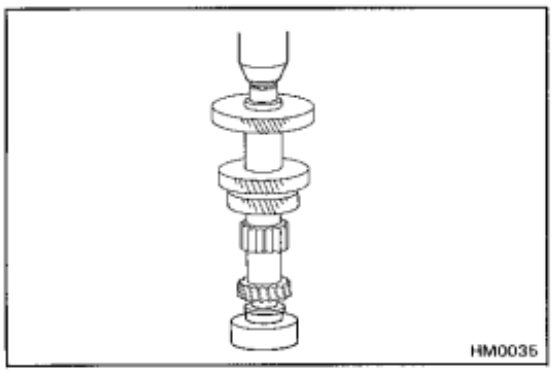

(b) Using SST and a press, install the counter gear rear bearing.

SST 09515-21010

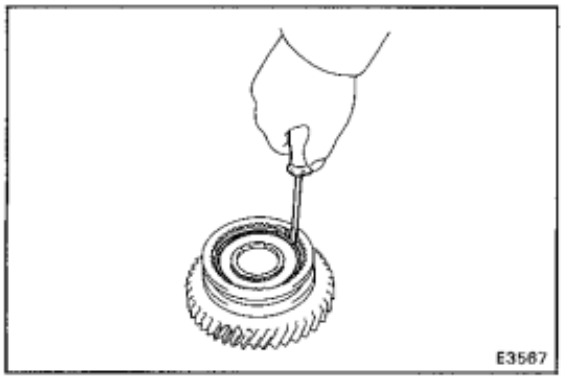

5. INSTALL HUB SLEEVE NO.3, SHIFTING KEYS AND SPRINGS

Using a screwdriver, install hub sleeve No.3, three shifting keys and two springs.

Transfer Adaptor

COMPONENTS

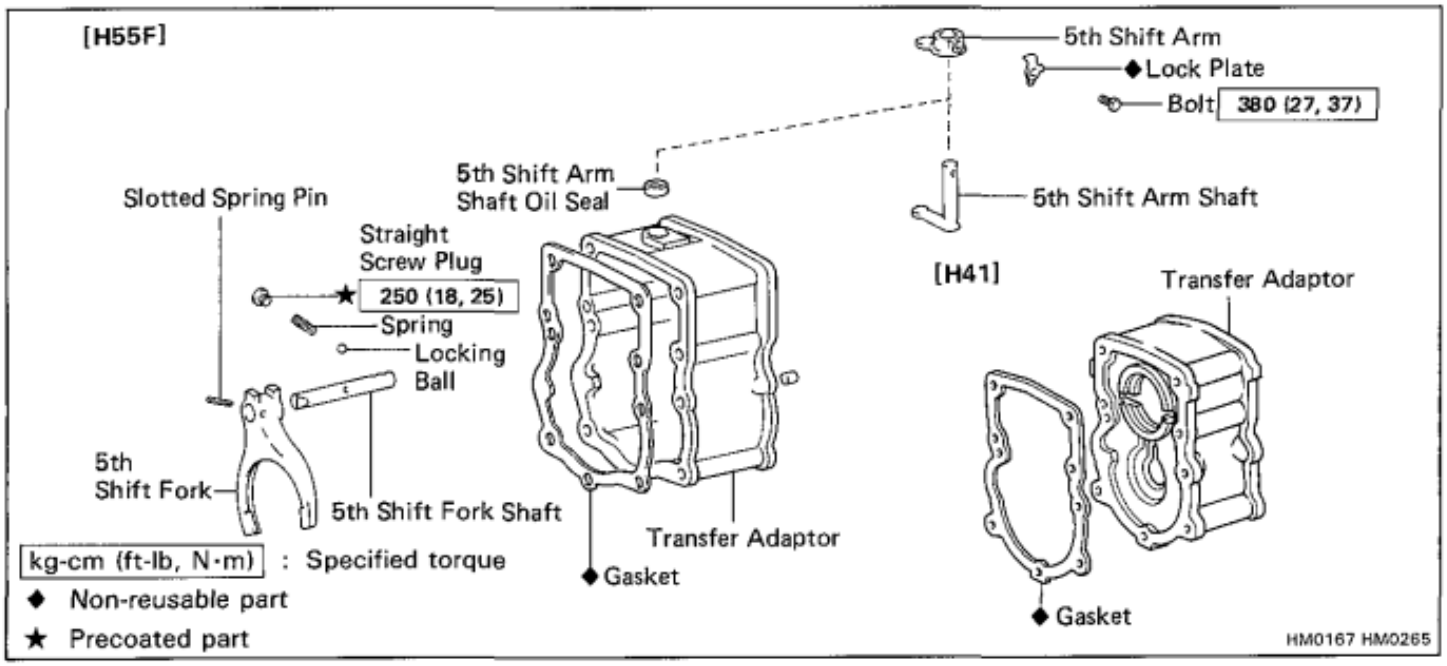

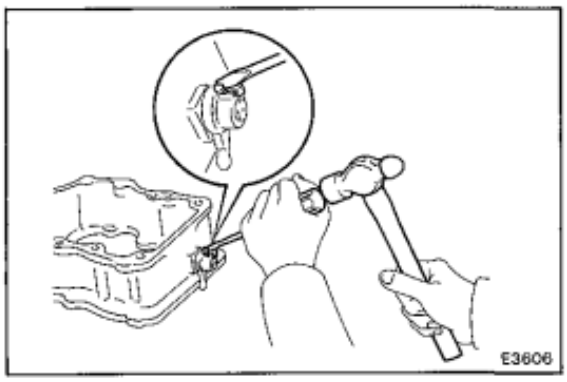

DISASSEMBLY OF TRANSFER ADAPTOR

REMOVE FIFTH SHIFT ARM AND SHAFT FROM TRANSFER ADAPTOR

(a) Using a screwdriver and hammer, loosen the staked part of lock plate.

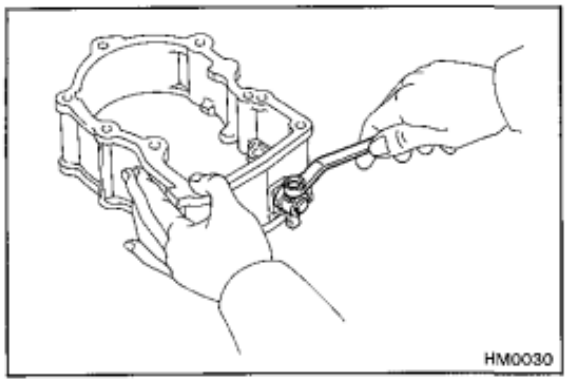

(b) Remove the bolt and lock plate.

(c) Remove the fifth shift arm and shaft.

REPLACEMENT OF OIL SEAL

IF NECESSARY, REPLACE FIFTH SHAFT ARM SHAFT OIL SEAL

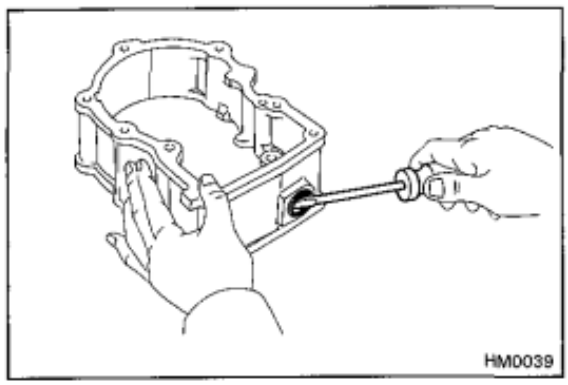

(a) Using a screwdriver, pry out the oil seal.

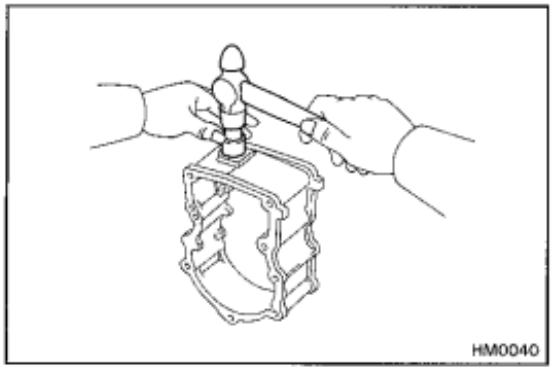

(b) Using a socket wrench and hammer, drive in a new oil seal.

Drive in depth: 1.0 mm (0.039 in.)

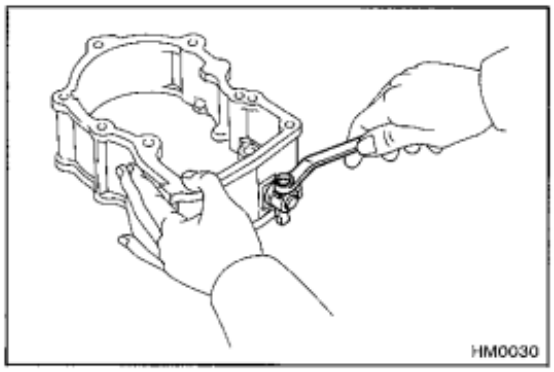

ASSEMBLY OF TRANSFER ADAPTOR

INSTALL FIFTH SHIFT ARM AND SHAFT

(a) Install the fifth shift arm shaft though the transfer adaptor and install the fifth shift arm.

(b) Install the bolts with a lock plate, and torque the bolt.

Torque: 380 kg-cm (27 ft-lb, 37 N·m)

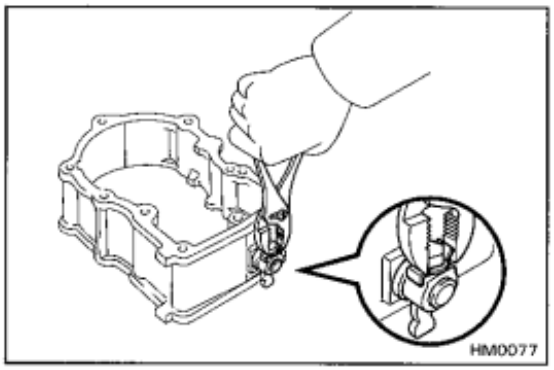

(c) Stake the lock plate.

Front Bearing Retainer

COMPONENTS

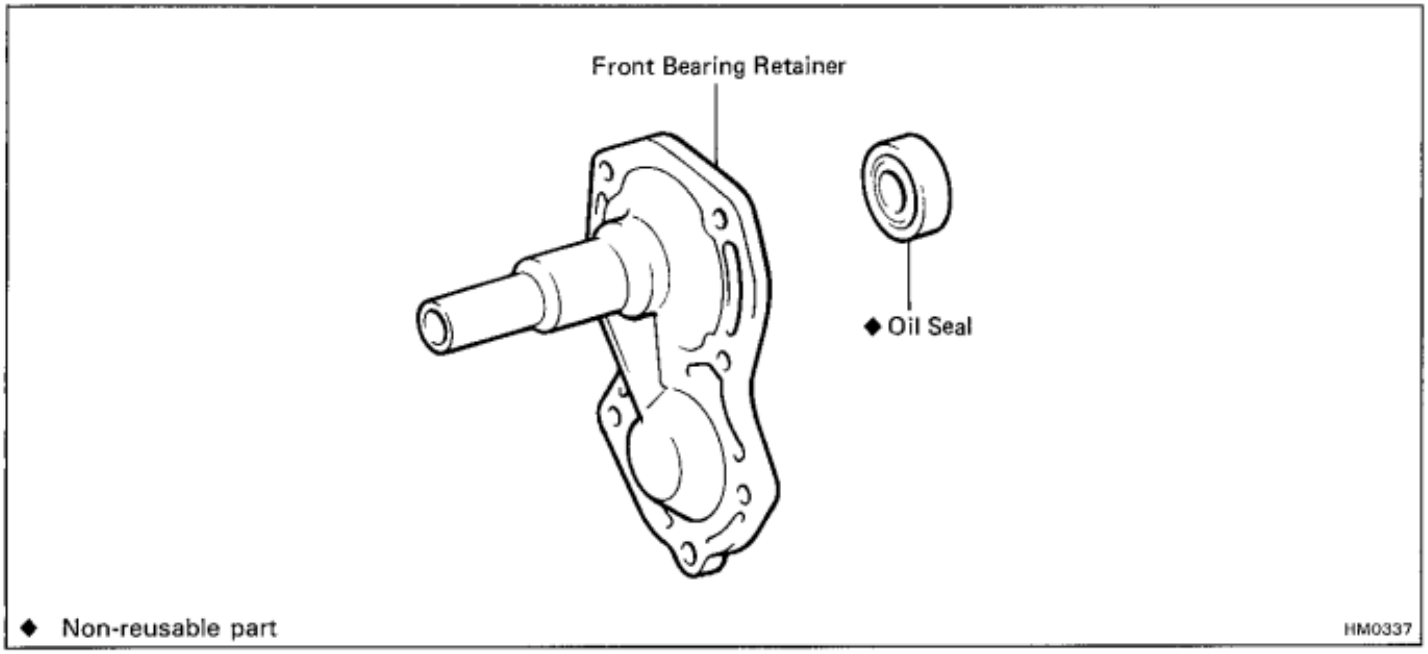

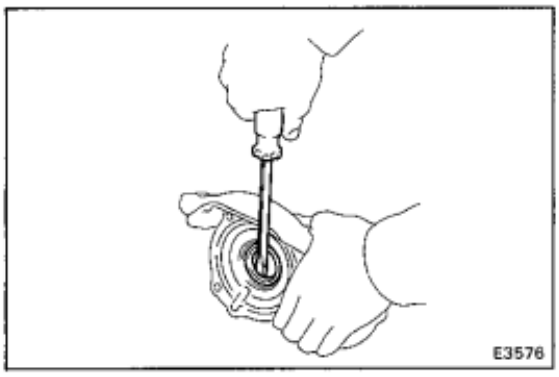

REPLACEMENT OF OIL SEAL

IF NECESSARY, REPLACE FRONT BEARING RETAINER OIL SEAL

(a) Using a screwdriver, pry out the oil seal.

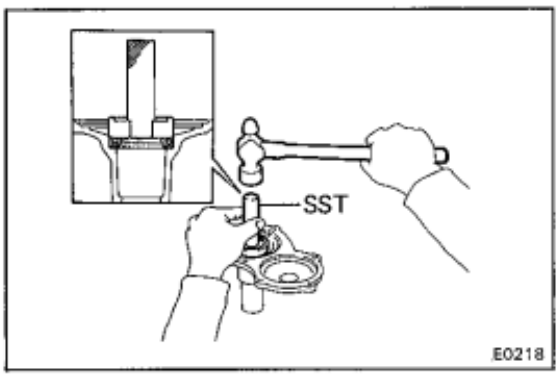

(b) Using SST and a hammer, drive in a new oil seal.

Oil seal drive in depth: 13.5 mm (0.532 in.)

SST 09608-20012 (09608-00030, 09608-03020)

Case Cover Assembly (H55F)

COMPONENTS

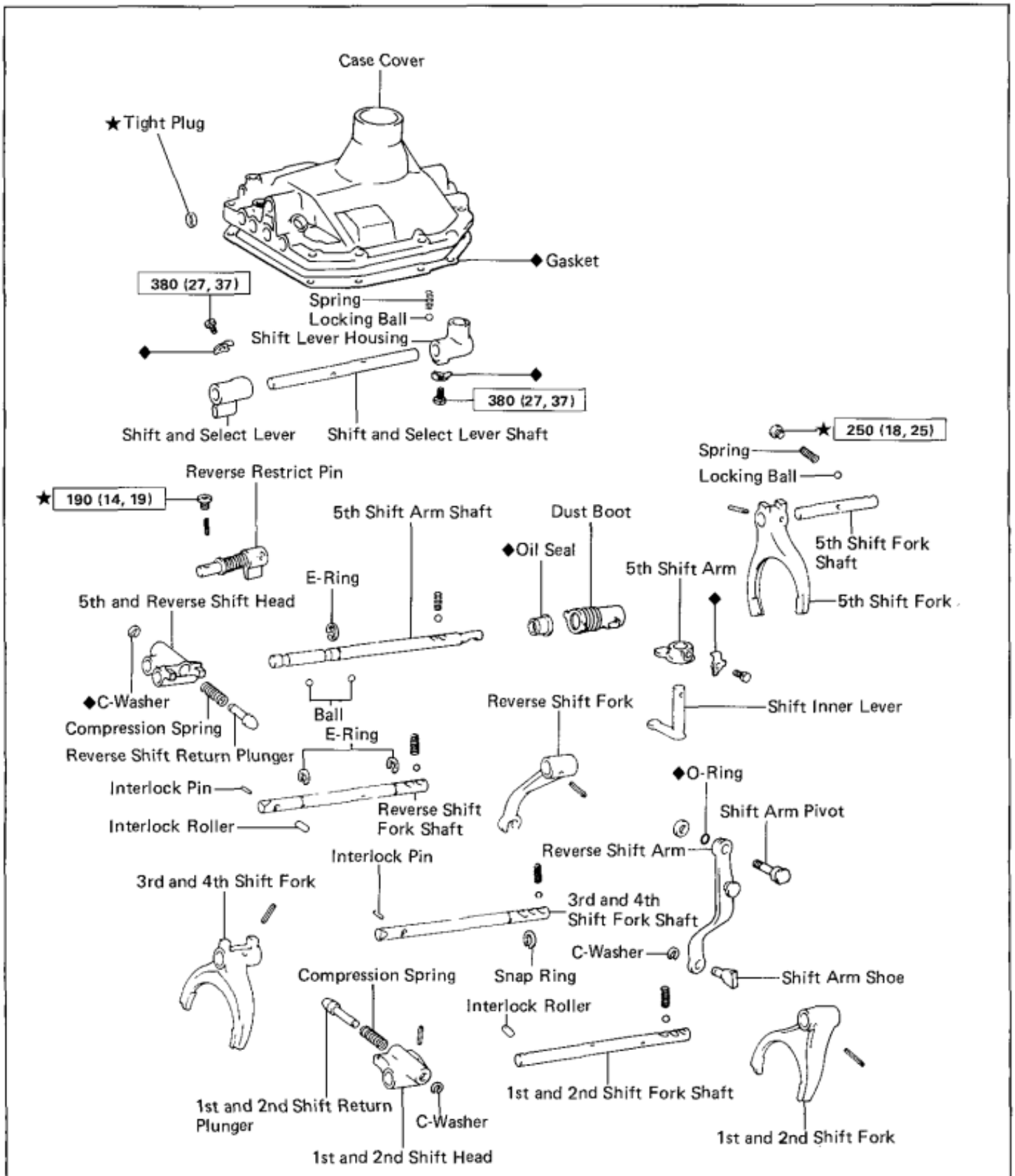

kg-cm (ft-lb, N·m) : Specified torque

◆ Non-reusable part

★ Precoated part

HM0261

DISASSEMBLY OF CASE COVER ASSEMBLY

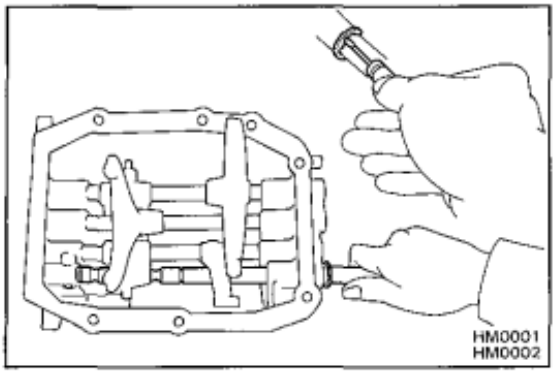

1. REMOVE FIFTH SHIFT ARM SHAFT

(a) Using a screwdriver, pry out the E-ring.

(b) Remove the shaft, two interlock balls, locking ball and spring.

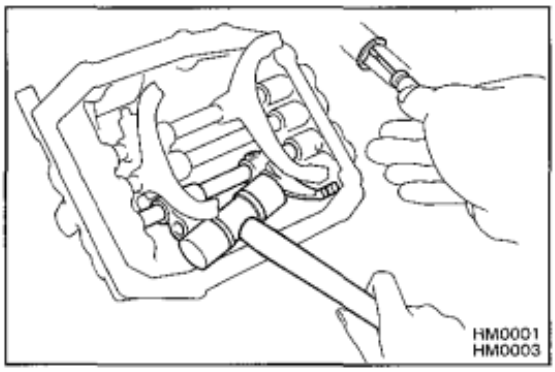

2. REMOVE FIFTH AND REVERSE SHIFT HEAD, REVERSE SHIFT FORK AND FORK SHAFT

(a) Using a screwdriver, pry out the E-rings

(b) Using a plastic hammer, tap on the shift fork and remove the tight plug from the case cover.

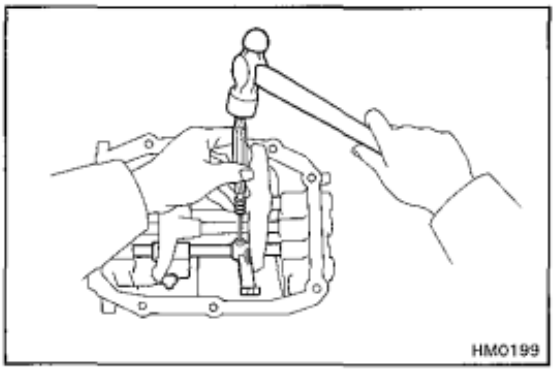

(c) Using a pin punch, drive out the slotted spring pin from the shift fork.

(d) Remove the fork shaft, shift fork, shift head, interlock roller, interlock pin, locking ball and spring.

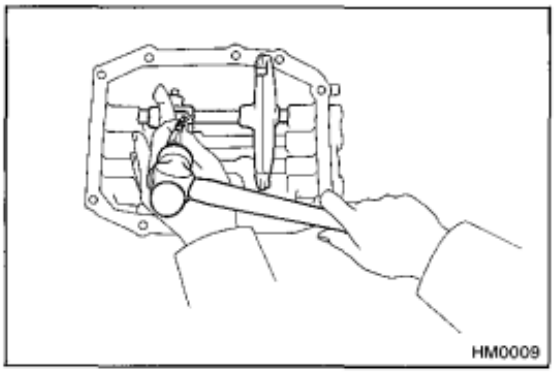

3. REMOVE FIRST AND SECOND SHIFT HEAD, SHIFT FORK AND FORK SHAFT

(a) Using a pin punch and hammer, drive out the slotted spring pin from the shift head.

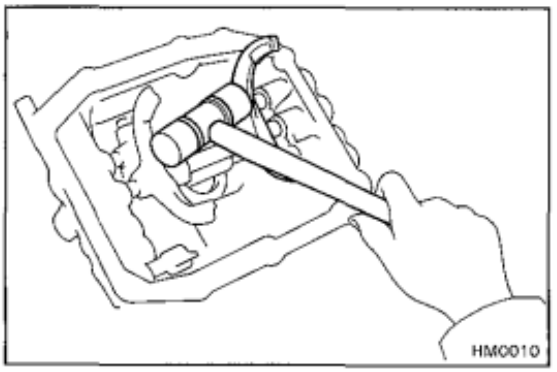

(b) Using a plastic hammer, tap the shift fork and remove the tight plug from the case cover.

(c) Using a pin punch and hammer, drive out the slotted spring pin from the shift fork.

(d) Remove the fork shaft, shift head, shift fork, locking ball and spring.

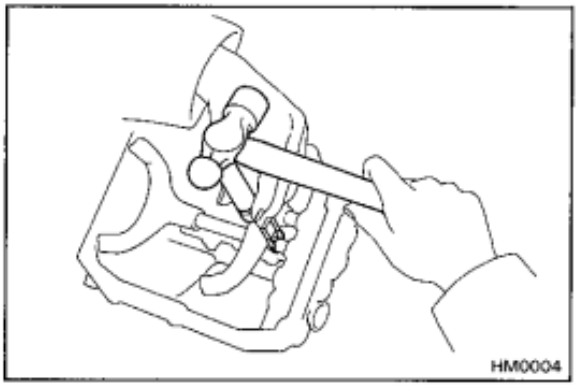

4. REMOVE THIRD AND FOURTH SHIFT FORK AND FORK SHAFT

(a) Using two screwdrivers and a hammer, tap out the snap ring.

(b) Using a plastic hammer, tap the shift fork and remove the tight plug from the case cover.

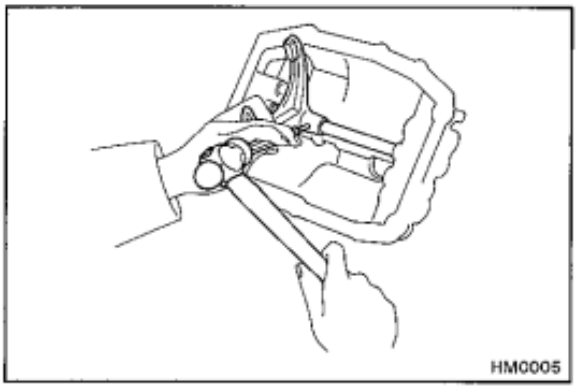

(c) Using a pin punch, drive out the slotted spring pin from the shift fork.

(d) Remove the fork shaft, shift fork, interlock roller, interlock pin, locking ball and spring.

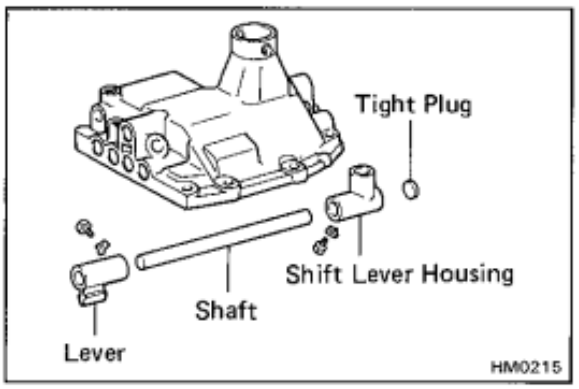

5. REMOVE SELECT LEVER, SHAFT AND SHIFT LEVER HOUSING

(a) Unstake the lock plate and remove the lock bolt from the shift lever housing.

(b) Using a plastic hammer, tap the select lever and remove the tight plug from the case cover.

(c) Unstake the lock plate and remove the lock bolt from the lever.

(d) Remove the shaft, select lever and shift lever housing.

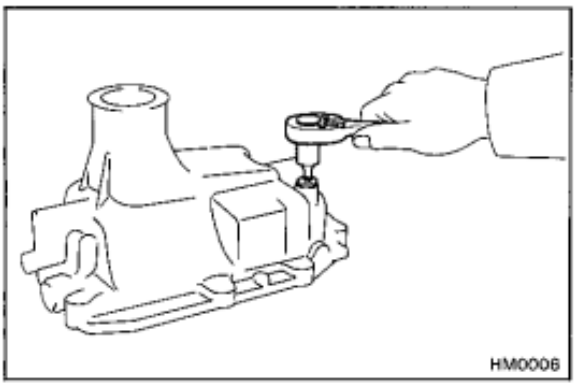

6. REMOVE REVERSE RESTRICT PIN

(a) Using a torx socket wrench, remove the straight screw plug.

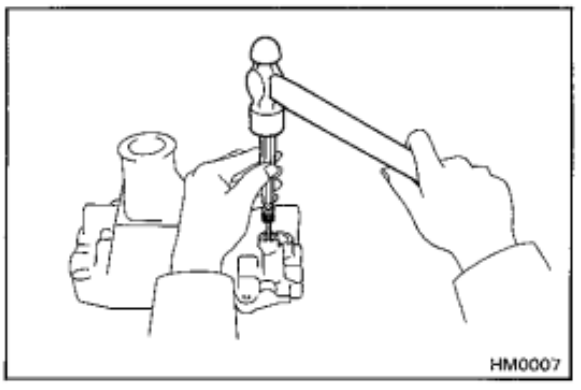

(b) Using a pin punch and hammer, drive out the slotted spring pin.

(c) Remove the restrict pin.

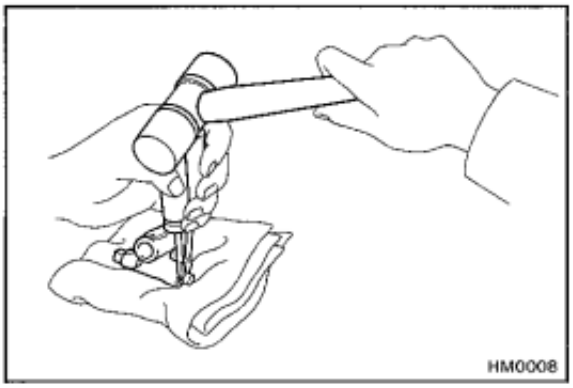

7. DISASSEMBLE SHIFT HEADS

(a) Using two screwdrivers and a hammer, remove the C-washer.

NOTICE: Be careful as the plunger will spring out.

(b) Remove the plunger and compression spring.

HINT: Be careful not to mix up the springs and plungers.

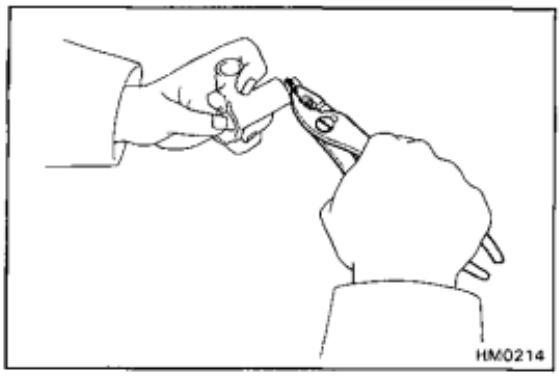

ASSEMBLY OF CASE COVER ASSEMBLY

1. ASSEMBLE SHIFT HEADS

(a) Install the compression spring and plunger into the shift head.

(b) Press the end of the plunger, and install a new C-washer.

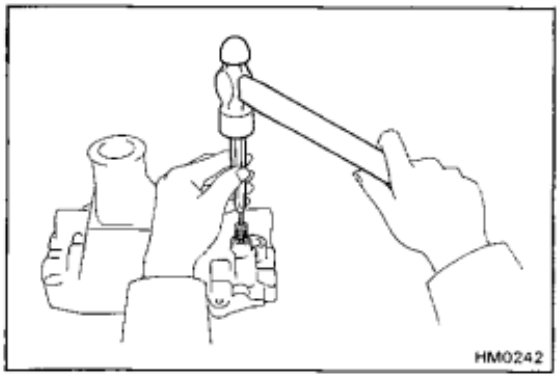

2. INSTALL REVERSE RESTRICT PIN

(a) Insert the reverse restrict pin into the case cover.

(b) Align the pin holes of the case cover and reverse restrict pin, and drive in the slotted spring pin.

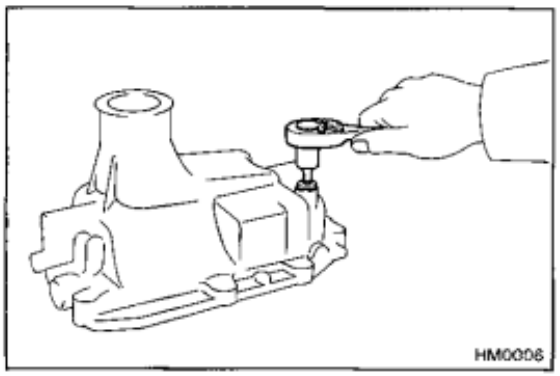

(c) Apply liquid sealer to the plug.

Sealant: Part No.08833-00080, THREE BOND 1344, LOCTITE 242 or equivalent

(d) Using a torx socket wrench, torque the plug.

Torque: 190 kg-cm (14 ft-lb, 19 N·m)

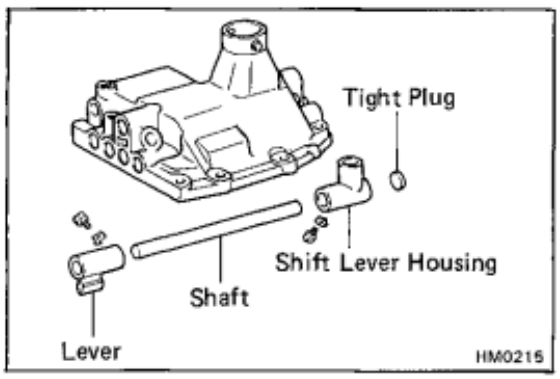

3. INSTALL SELECT LEVER, SHAFT AND SHIFT LEVER HOUSING

(a) Insert the shaft through the select lever and shift lever housing.

(b) Align the holes of the shaft and select lever, and install the lock bolt with a new lock plate.

Torque: 380 kg-cm (27 ft-lb, 37 N·m)

(c) Align the holes of the shaft and shift lever housing, and install the lock bolt with a new lock plate.

Torque: 380 kg-cm (27 ft-lb, 37 N·m)

(d) Stake the lock plates.

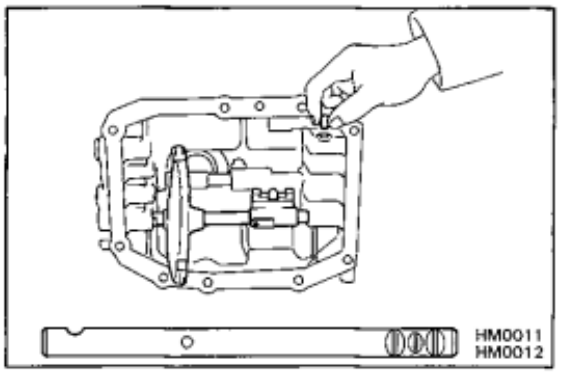

4. INSTALL FIRST AND SECOND SHIFT HEAD, FORK SHAFT AND SHIFT FORK

(a) Install the spring and locking ball.

(b) Insert the fork shaft through the shift fork and shift head.

(c) Install the interlock roller to the case cover.

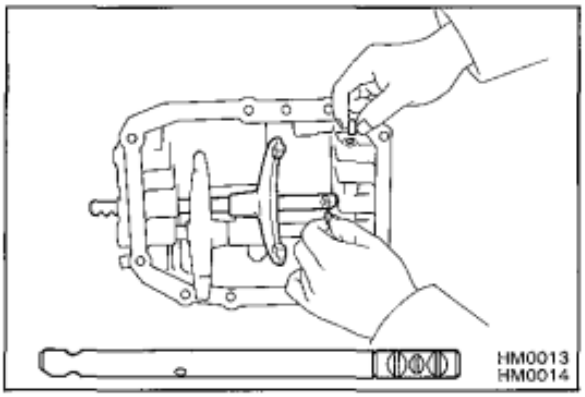

5. INSTALL THIRD AND FOURTH SHIFT FORK AND FORK SHAFT

(a) Install the spring and locking ball.

(b) Coat the interlock pin with MP grease and install it in the shaft.

(c) Insert the fork shaft through the shift fork.

(d) Install the interlock roller to the case cover.

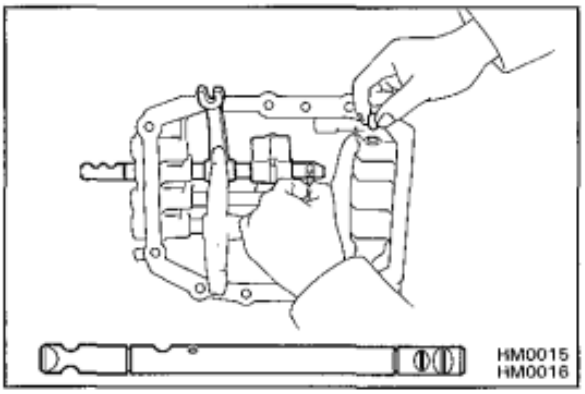

6. INSTALL REVERSE AND FIFTH SHIFT HEAD, REVERSE SHIFT FORK AND FORK SHAFT

(a) Install the spring and locking ball.

(b) Coat the interlock pin with MP grease and install it in the shaft.

(c) Insert the fork shaft through the shift fork and the shift head.

(d) Install the two interlock balls to the case cover and shift head.

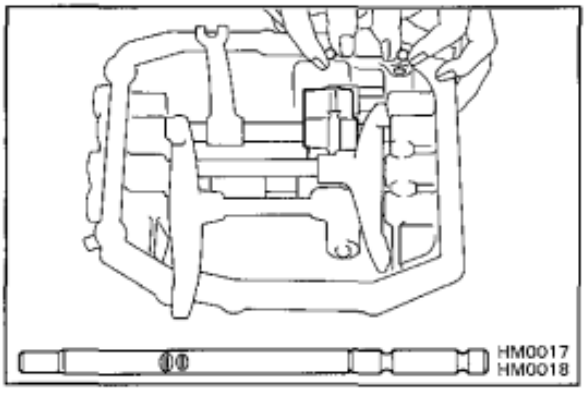

7. INSTALL FIFTH SHIFT ARM SHAFT

(a) Install the spring and locking ball.

(b) Insert the shaft through the shift head.

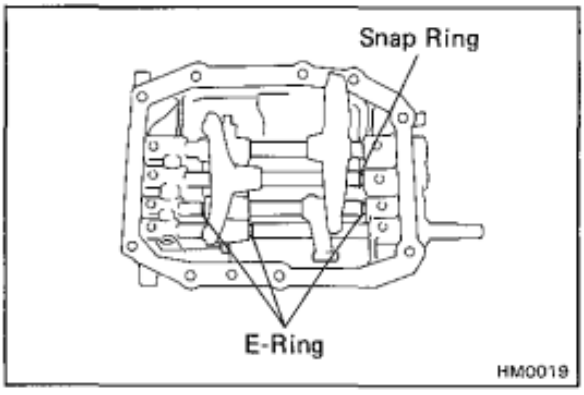

8. INSTALL THREE E-RINGS AND SNAP RING

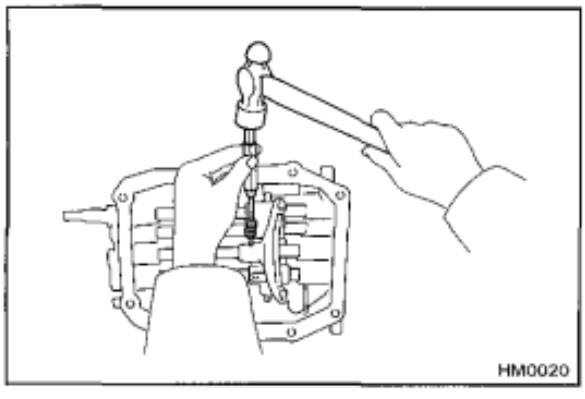

9. INSTALL SLOTTED SPRING PINS

(a) Align the pin hole of each shaft with either the fork, head and other fork or arm respectively.

(b) Using a pin punch and hammer, drive in the slotted spring pins until they are flush with the fork.

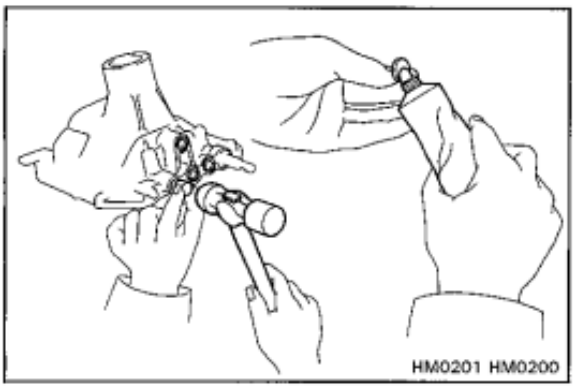

10. INSTALL TIGHT PLUGS

Apply liquid sealer to the tight plugs and drive them into the case cover as shown.

Sealant: Part No.08833-00070, THREE BOND 1324, or equivalent

Transmission Case Assembly

COMPONENTS

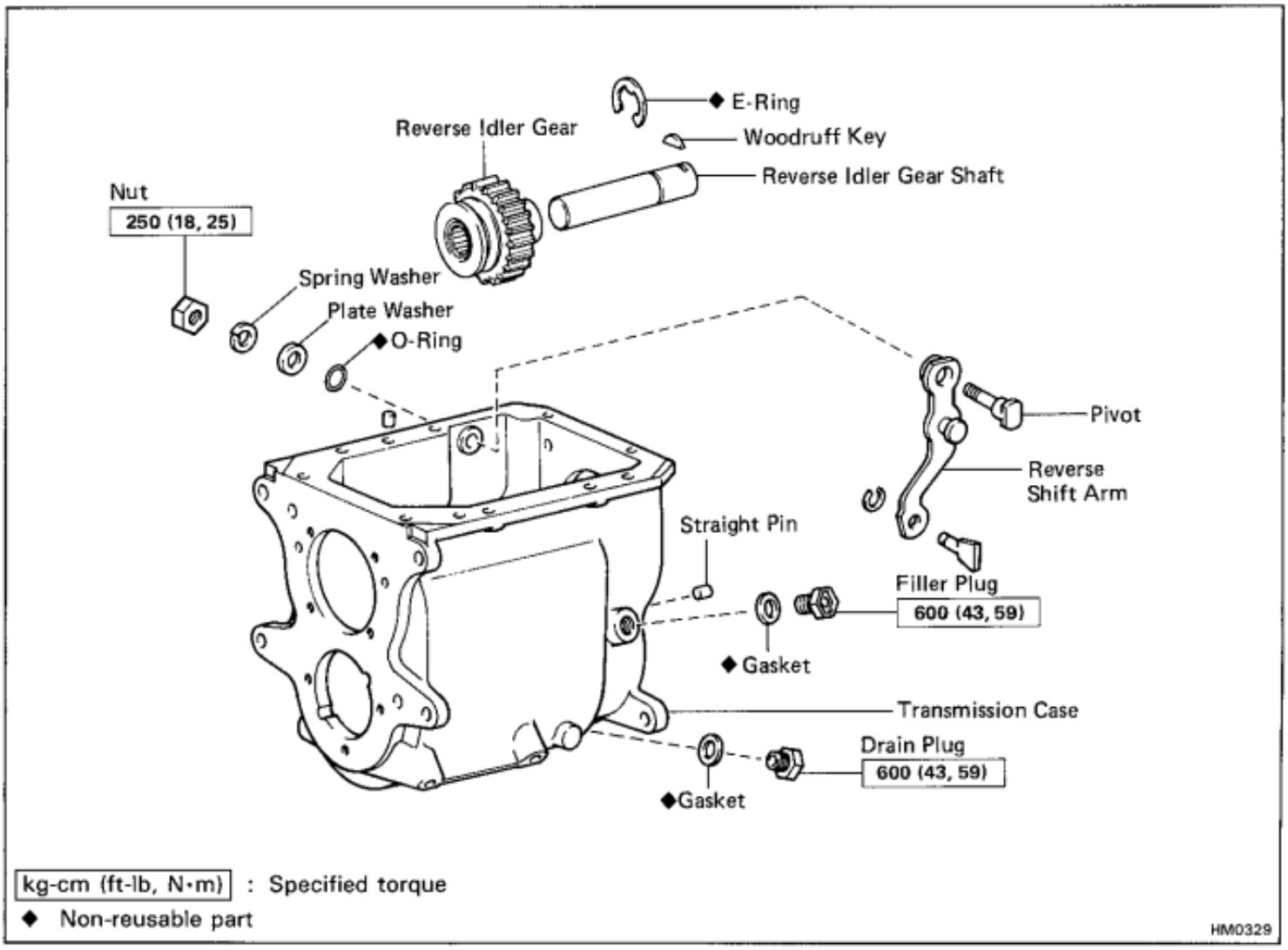

kg-cm (ft-lb, N·m) : Specified torque
◆ Non-reusable part

HM0329

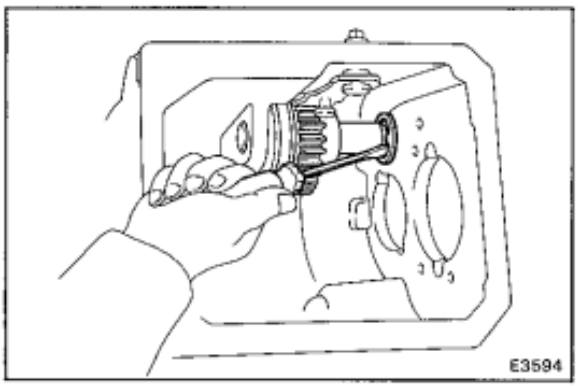

DISASSEMBLY OF TRANSMISSION CASE ASSEMBLY

1. REMOVE REVERSE IDLER GEAR AND SHAFT

(a) Using a screwdriver, remove the E-ring.

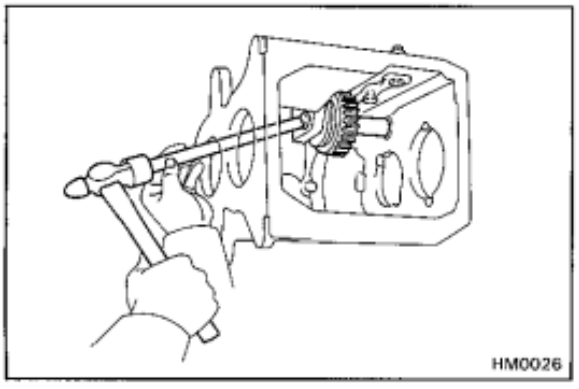

(b) Using a brass bar and hammer, tap out the reverse idler gear shaft toward the rear.

(c) Remove the reverse idler gear and woodruff key.

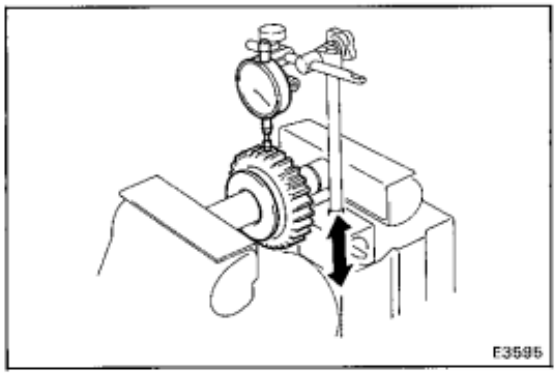

2. MEASURE REVERSE IDLER GEAR OIL CLEARANCE

Using a dial indicator, measure the reverse idler gear oil clearance.

Standard clearance: **0.065 – 0.103 mm (0.0026 – 0.0041 in.)**

Maximum clearance: **0.11 mm (0.0043 in.)**

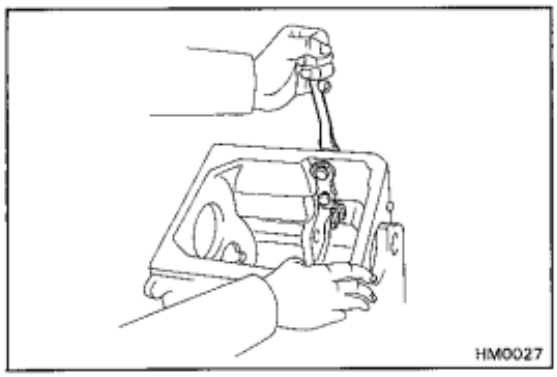

3. REMOVE REVERSE SHIFT ARM FROM TRANSMISSION CASE

Remove the nut, washers, O-ring, pivot arm, and reverse shift arm.

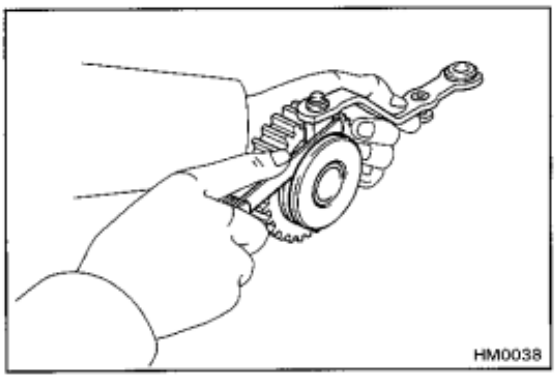

4. MEASURE CLEARANCE OF SHIFT ARM AND REVERSE IDLER GEAR

Using a feeler gauge, measure the shift arm and reverse idler gear clearance.

Standard clearance: **0.1 – 0.3 mm (0.0039 – 0.0118 in.)**

Maximum clearance: **0.35 mm (0.0138 in.)**

If the clearance more than the limit, replace the shift arm shoe or reverse idler gear.

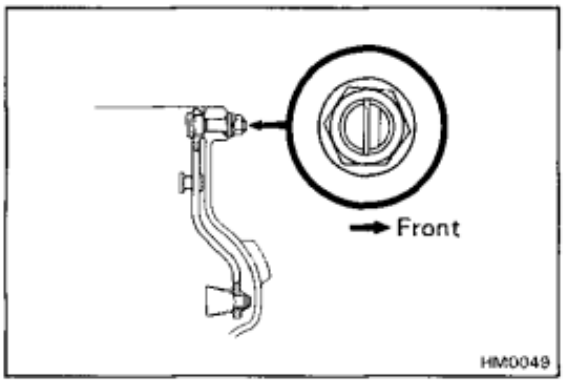

ASSEMBLY OF TRANSMISSION CASE ASSEMBLY

1. INSTALL REVERSE SHIFT ARM

(a) Install the reverse shift arm so its pivot is positioned as shown.

(b) Install the O-ring, plate washer, spring washer and nut.

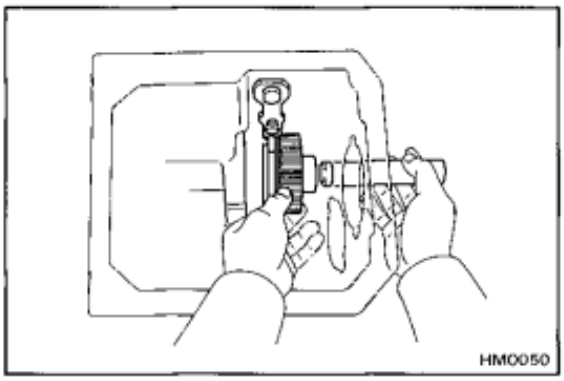

2. INSTALL REVERSE IDLER GEAR AND SHAFT

(a) Align the reverse idler gear groove with the reverse shift arm shoe.

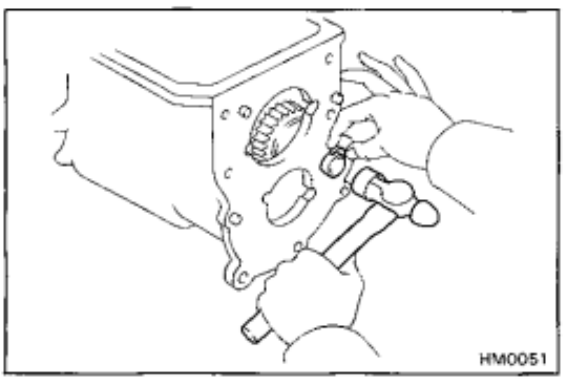

(b) Install the reverse idler gear shaft with the woodruff key through the gear.

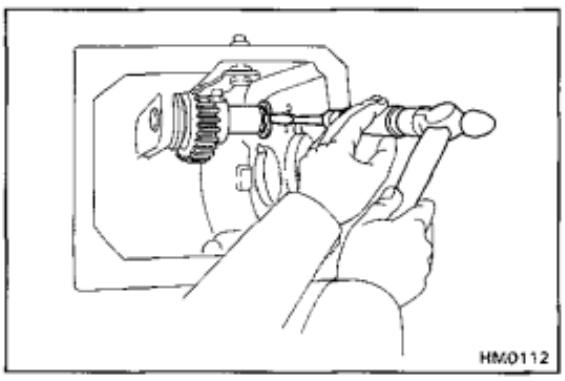

(c) Using a screwdriver and hammer, install a new E-ring.

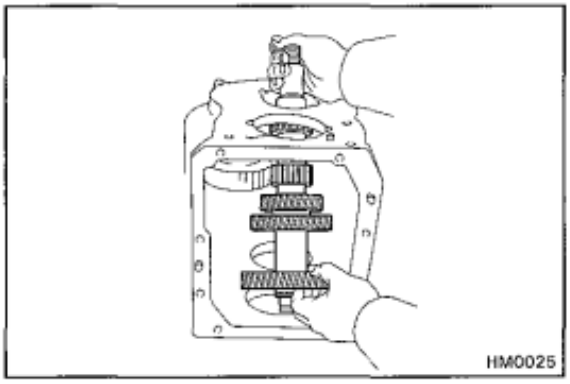

ASSEMBLY OF TRANSMISSION

(See page MT-54, 55)

1. PUT COUNTER GEAR INTO TRANSMISSION CASE

(a) Stand the transmission case on its front end.

(b) Put the counter gear into the case.

NOTICE: Be careful not to damage either end.

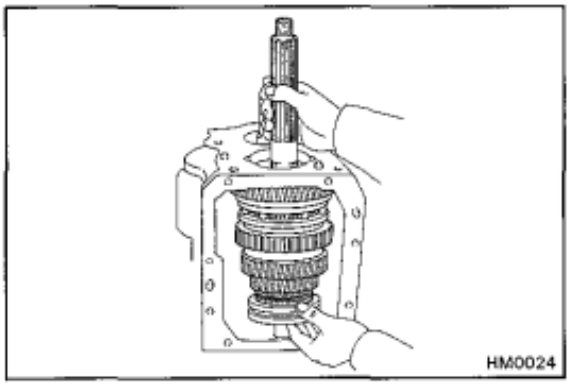

2. PUT OUTPUT SHAFT ASSEMBLY INTO TRANSMISSION CASE

NOTICE: Be careful not to damage the front end of the shaft.

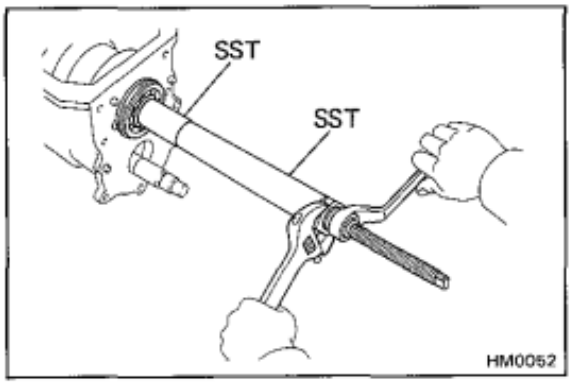

3. *INSTALL OUTPUT SHAFT CENTER BEARING*

(a) Using snap ring pliers, install the snap ring onto the bearing.

(b) Confirm that the groove of the first gear thrust washer and the straight pin are aligned.

(c) Using SST, install the bearing until it comes into contact with the first gear thrust washer.

SST 09309-36033, 09309-60010

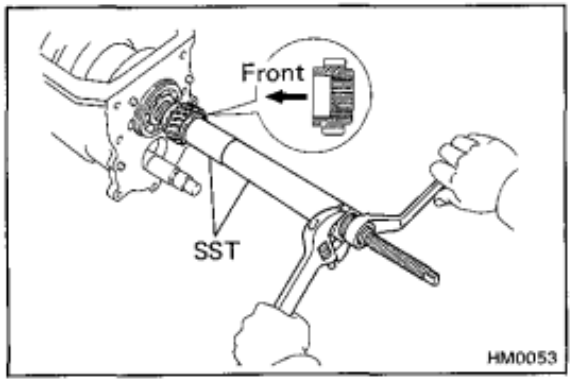

4. (H55F)
INSTALL FIFTH GEAR TO OUTPUT SHAFT

(a) Apply MP grease to the inside surface of the fifth gear.

(b) Using SST, install the fifth gear to the output shaft.

SST 09309-36033, 09309-60010

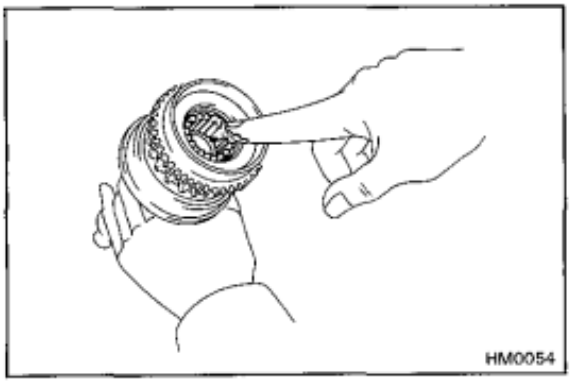

5. INSTALL INPUT SHAFT

(a) Using a snap ring pliers, install the snap ring onto the bearing.

(b) Install the 17 needle roller bearings into the input shaft.

(c) Apply MP grease to the needle roller bearings.

(d) Align the synchronizer ring slots with the shifting keys.

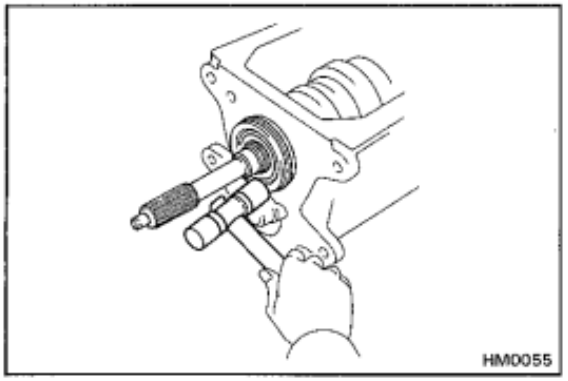
HM0055

(e) Using a plastic hammer, drive in the input shaft.

HINT: Be sure that the counter gear is low enough so as not to interfere with the input shaft.

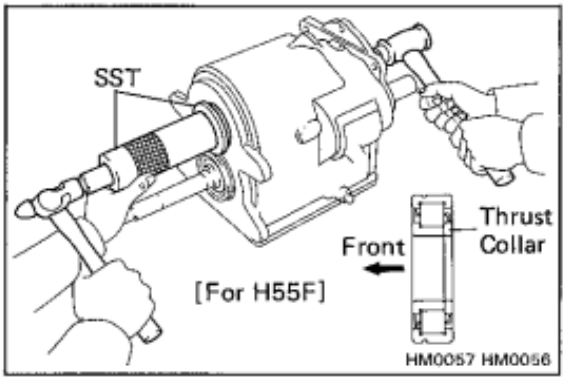

HM0057 HM0058

6. INSTALL COUNTER GEAR FRONT BEARING

(a) Turn the transmission over and align the counter gear center.

(b) (H55F)
Install the thrust collar for the front bearing onto the counter gear.

(c) Using SST, drive in the bearing.

SST 09316-60010 (09316-00010, 09316-00030)

HINT: When driving in the bearing, support the counter gear in rear with a 3-5 lb hammer or equivalent.

(d) Install the snap ring onto the bearing outer race.

(e) Select a snap ring that will allow minimum axial play and install it on the counter gear front end.

Snap ring thickness

Mark	Thickness mm (in.)
0	2.05 — 2.10 (0.0807 — 0.0827)
2	2.15 — 2.20 (0.0846 — 0.0866)
4	2.25 — 2.30 (0.0886 — 0.0906)

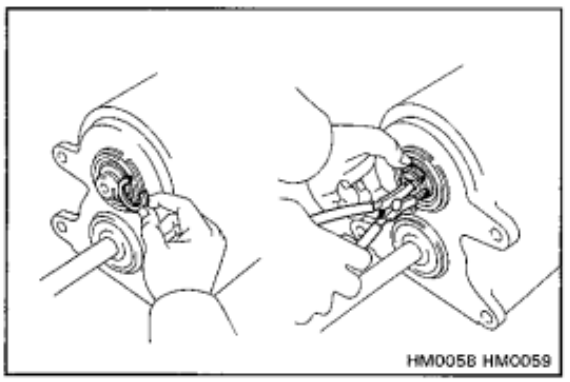
HM0058 HM0059

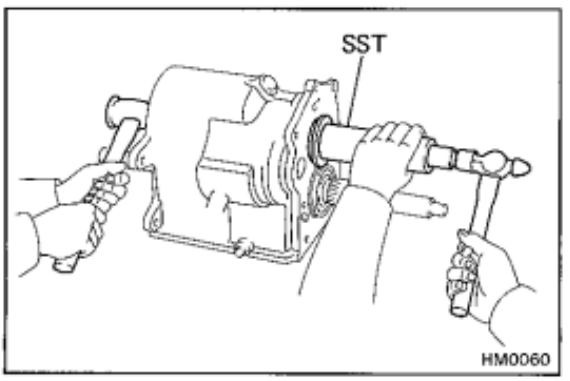

HM0060

7. INSTALL COUNTER GEAR REAR BEARING

(a) (H55F)
Install the snap ring to the counter gear rear bearing outer race.

(b) Using SST, drive in the rear bearing.

SST 09316-60010 (09316-00010, 09316-00030)

HINT: When driving in the bearing, support the counter gear in front with a 3-5 lb hammer or equivalent.

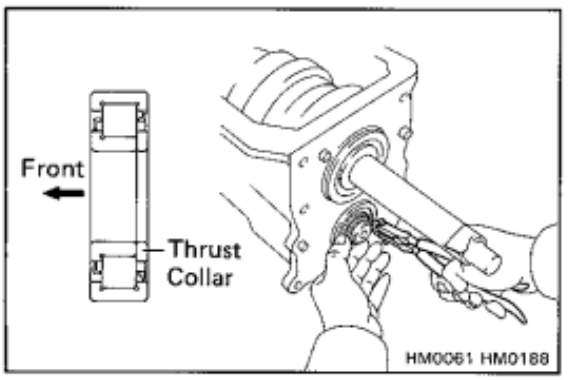

HM0061 HM0188

(c) (H41)
Install the thrust collar for the rear bearing onto the counter gear rear end.

(d) (H41)
Using snap ring pliers, install the snap ring onto the counter gear rear end.

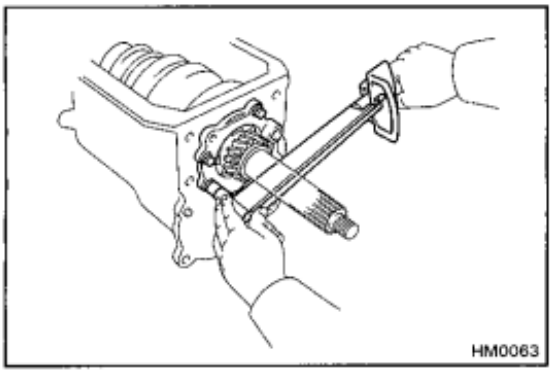
HM0063

8. **(H55F)**
INSTALL REAR BEARING RETAINER

(a) Install the rear bearing retainer to the transmission case.

(b) Install the four bolts and torque them.

Torque: 185 kg-cm (13 ft-lb, 18 N·m)

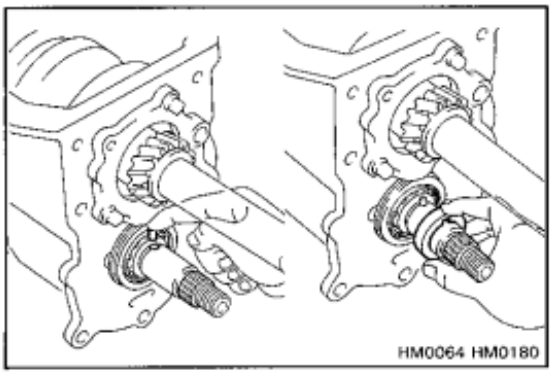
HM0064 HM0180

9. **(H55F)**
INSTALL STRAIGHT PIN AND COUNTER FIFTH GEAR THRUST WASHER

(a) Install the straight pin onto the counter shaft.

(b) Align the thrust washer slot with the straight pin, and install the thrust washer.

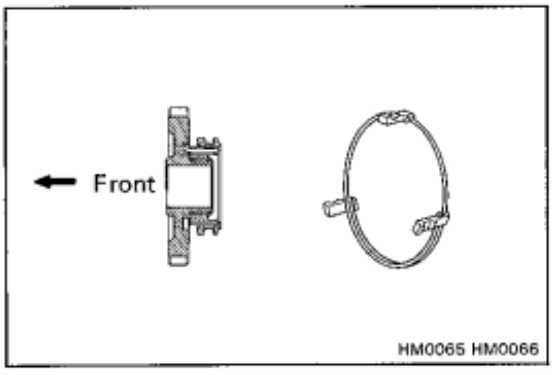

HM0065 HM0066

10. **(H55F)**
ASSEMBLE COUNTER FIFTH GEAR

(a) Install the No.3 hub sleeve and shifting keys to the counter fifth gear.

(b) Install the shifting key springs under the shifting keys so that the spring ends are not in line, as shown.

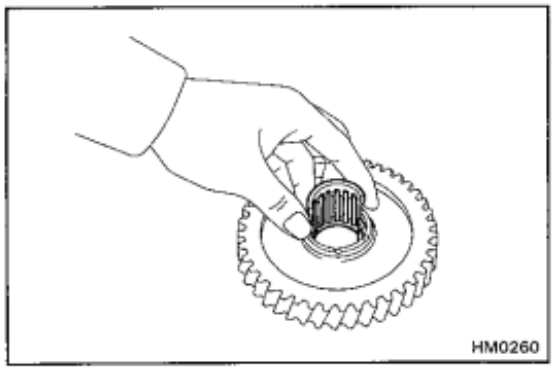
HM0260

11. **(H55F)**
INSTALL NEEDLE ROLLER BEARING

(a) Apply MP grease to the needle roller bearing.

(b) Install the needle roller bearing into the counter fifth gear.

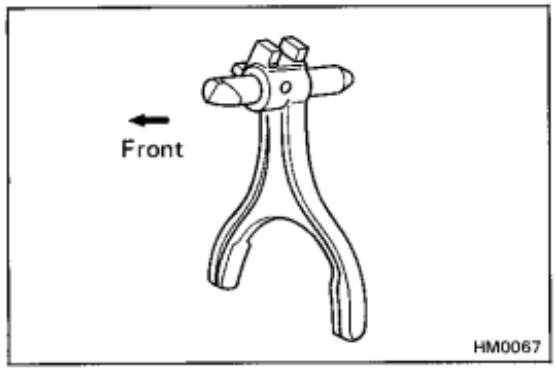

HM0067

12. **(H55F)**
ASSEMBLE FIFTH SHIFT FORK

(a) Install the fifth shift fork to the shaft.

(b) Align the pin holes of the fifth shift fork and shaft.

(c) Using a pin punch and hammer, drive in the slotted spring pin.

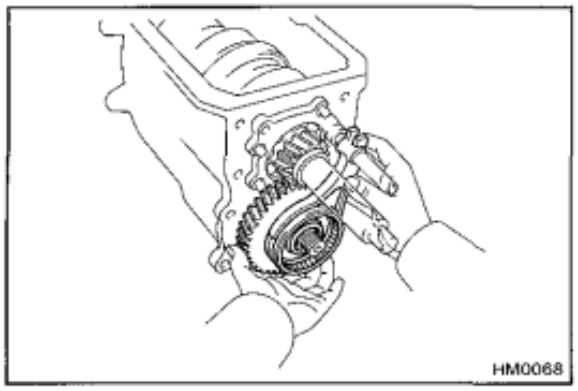
HM0068

13. **(H55F)**
INSTALL COUNTER FIFTH GEAR ASSEMBLY WITH FIFTH SHIFT FORK

(a) Install the fifth shift fork and fork shaft onto hub sleeve No.3.

(b) Install the counter fifth gear assembly with the fifth shift fork.

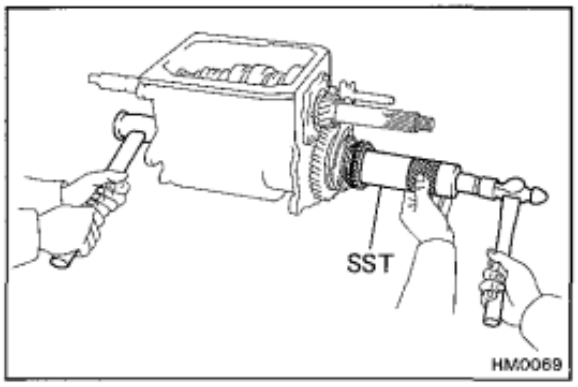

HM0069

14. **(H55F)**
INSTALL SYNCHRONIZER RING AND GEAR SPLINE PIECE NO.5

(a) Align the synchronizer ring slots with the shifting keys, and place the synchronizer ring on the rear end of the counter fifth gear.

(b) Using SST, drive gear spline piece No.5 into the counter gear to where the lock nut can be installed.

SST 09316-60010 (09316-00010)

HINT: When driving in gear spline piece No.5, support the counter gear in front with a 3 — 5 lb hammer or equivalent.

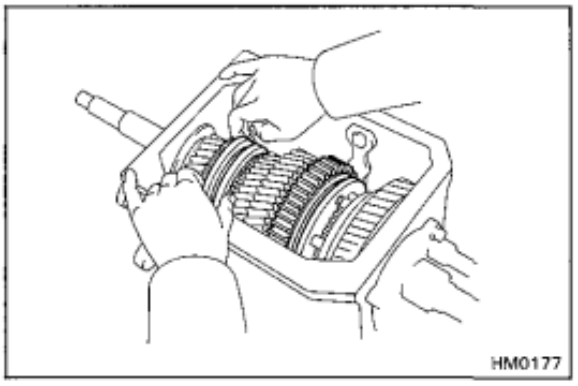
HM0177

15. **(H55F)**
INSTALL LOCK NUT TO COUNTER GEAR REAR END

(a) Engage the gear double meshing.

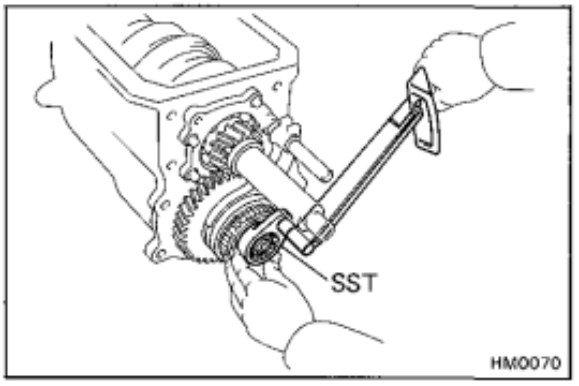

HM0070

(b) Using SST, install and torque a new lock nut.

SST 09326-20011

Torque: 1,160 kg-cm (84 ft-lb, 114 N·m)

HINT: Use a torque wrench with a fulcrum lench of 425 mm (16.73 in.).

(c) Disengage the gear double meshing.

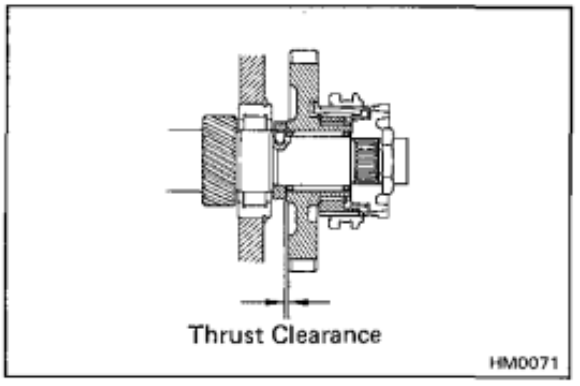

HM0071

(d) Using a feeler gauge, measure the counter fifth gear thrust clearance.

Standard clearance: 0.10 — 0.30 mm (0.0039 — 0.0118 in.)

Maximum clearance: 0.30 mm (0.0118 in.)

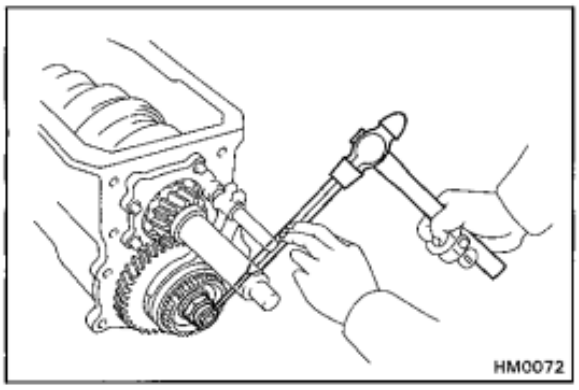

(e) Using a punch, stake the lock nut.

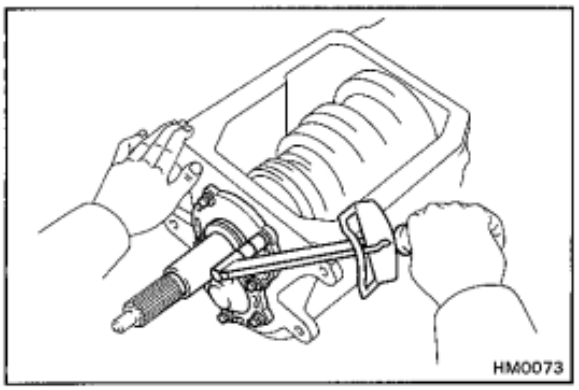

16. INSTALL FRONT BEARING RETAINER WITH A GASKET

(a) Install the front bearing retainer with a new gasket.

(b) Apply liquid sealer to the bolts.

Sealant: Part No.08833-00080, THREE BOND 1344, LOCTITE 242 or equivalent

(c) Install and torque the bolts.

Torque: 170 kg-cm (12 ft-lb, 17 N·m)

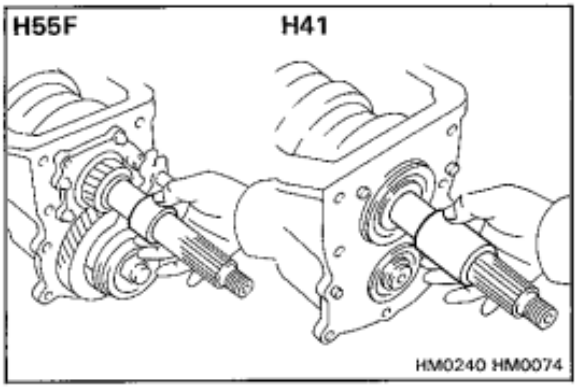

17. INSTALL SPACER

Install the spacer on the output shaft.

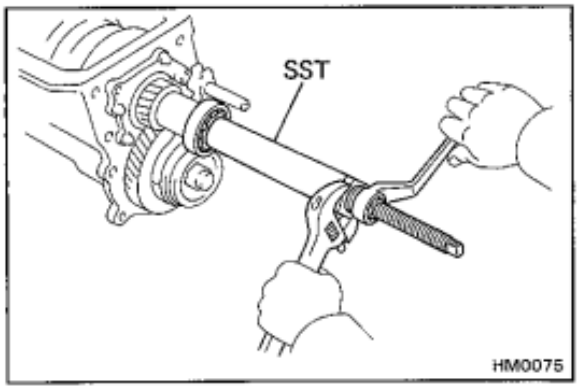

18. INSTALL OUTPUT SHAFT REAR BEARING

Using SST, install the rear bearing.

SST 09309-36033

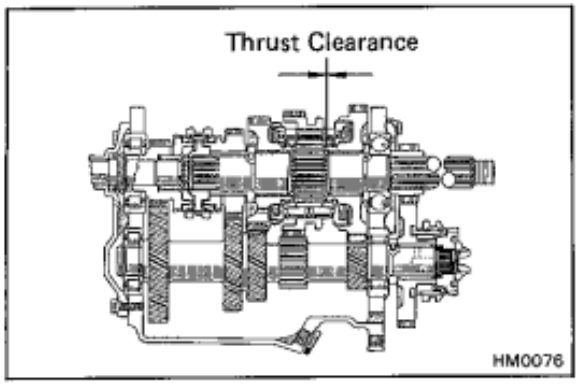

19. MEASURE FIRST GEAR THRUST CLEARANCE

Using a feeler gauge, measure the thrust clearance.

Standard clearance: 0.175 — 0.320 mm (0.0069 — 0.0126 in.)

Maximum clearance: 0.35 mm (0.0138 in.)

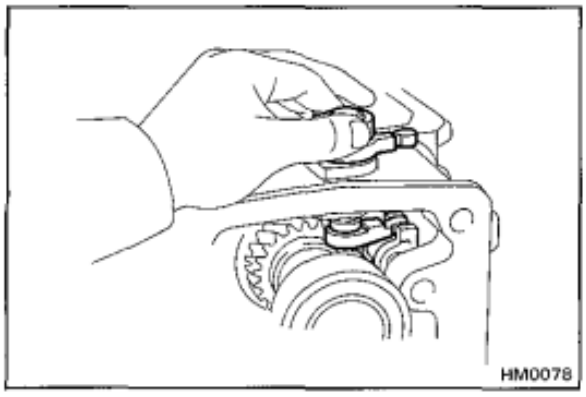

20. INSTALL TRANSFER ADAPTOR WITH A GASKET

(a) Place a new gasket in position.

(b) (H55F)
Align the end of the fifth shift arm and fifth shift fork, and install the transfer adaptor.

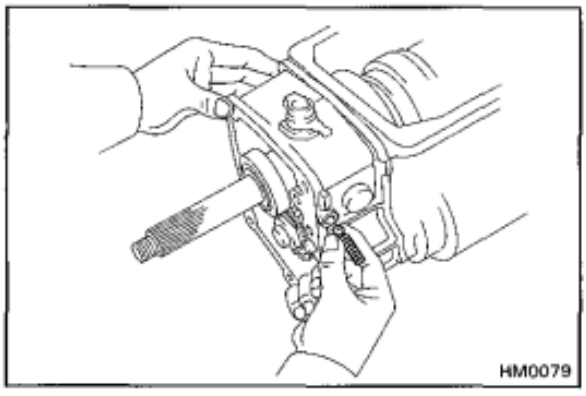

(c) (H55F)
Install the locking ball and spring.

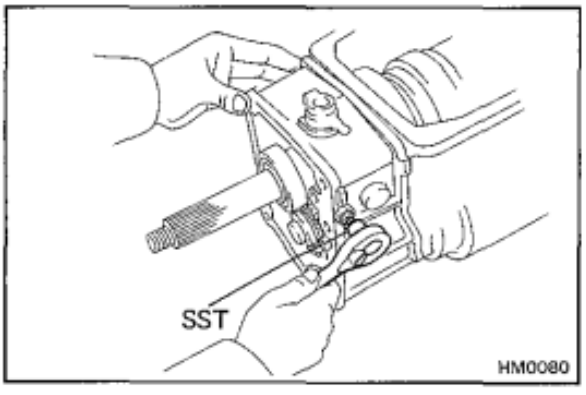

(d) (H55F)
Apply liquid sealer to the plug.

Sealant: Part No.08833-00080, THREE BOND 1344, LOCTITE 242 or equivalent

(e) (H55F)
Using SST, install and torque the screw plug.

SST 09313-30021

Torque: 250 kg-cm (18 ft-lb, 25 N·m)

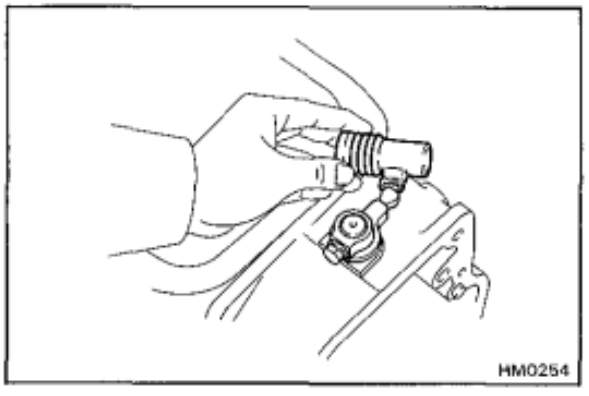

21. INSTALL CASE COVER

(a) (H55F)
Install the dust boot.

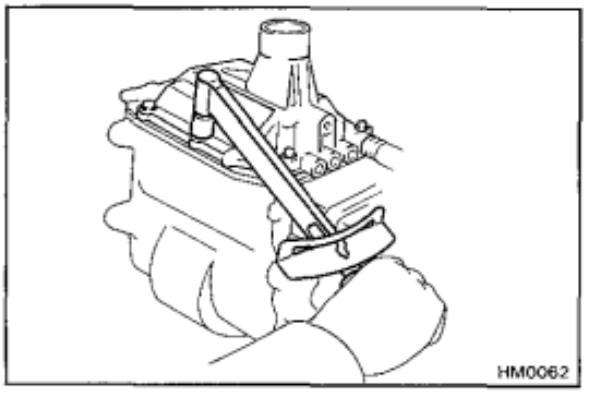

(b) Install the case cover with a new gasket.

(c) Torque the bolts.

Torque: 400 kg-cm (29 ft-lb, 39 N·m)

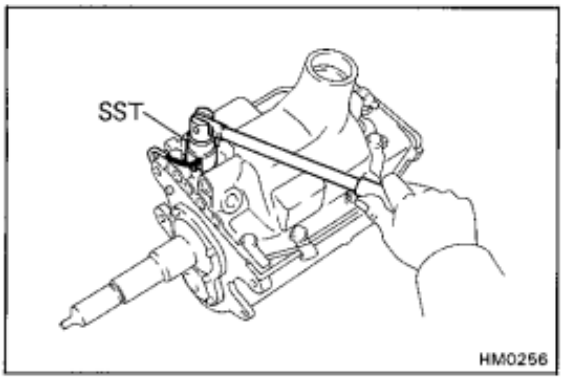

22. INSTALL BACK-UP LIGHT SWITCH

Using SST, install the back-up light switch.

SST 09817-16011

Torque: 410 kg-cm (30 ft-lb, 40 N·m)

23. INSTALL TRANSFER
(See page TF-4)

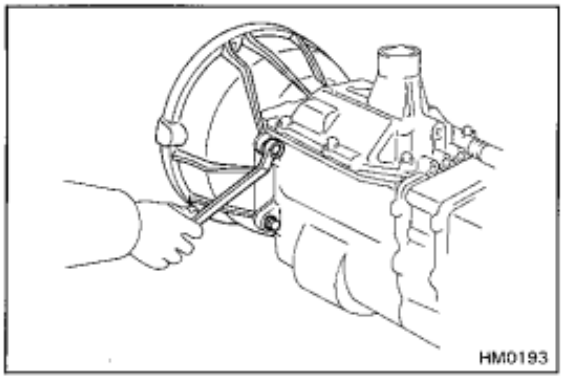

24. (HJ, BJ)
INSTALL CLUTCH HOUSING

Install and torque the four bolts.

Torque: 650 kg-cm (47 ft-lb, 64 N·m)

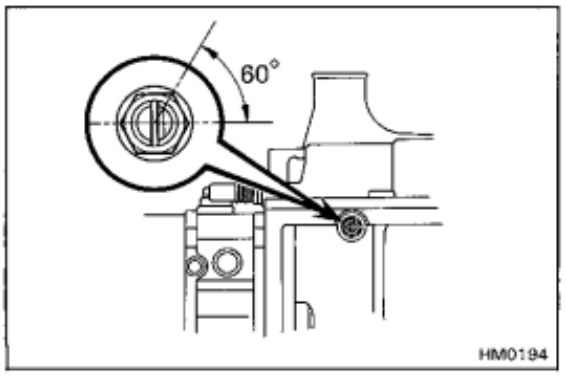

25. ADJUST REVERSE SHIFT ARM PIVOT POSITION

(a) Position the adjustment mark on the shift arm pivot end toward the front.

(b) Temporarily install the shift lever, and if the shift lever is catching on something in the selecting direction, adjust by moving the position of the alignment mark by 60°.

(c) Torque the nut.

Torque: 250 kg-cm (18 ft-lb, 25 N·m)

MANUAL TRANSMISSION (H41 and H55F)

Specifications

Gear thrust clearance			
1st & 2nd gear	STD	0.175 – 0.325 mm	0.0069 – 0.0128 in.
	Limit	0.35 mm	0.0138 in.
3rd gear	STD	0.125 – 0.275 mm	0.0049 – 0.0108 in.
	Limit	0.30 mm	0.0118 in.
Counter 5th	STD	0.10 – 0.30 mm	0.0039 – 0.0118 in.
	Limit	0.30 mm	0.0118 in.
Input shaft to synchronizer ring	STD	1.1 – 1.9 mm	0.0433 – 0.0748 in.
	Limit	1.0 mm	0.0394 in.
Input shaft snap ring thickness		3.20 – 3.31 mm	0.1260 – 0.1303 in.
		3.31 – 3.42 mm	0.1303 – 0.1346 in.
Gear oil clearance			
1st & 2nd gear	STD	0.020 – 0.073 mm	0.0008 – 0.0029 in.
	Limit	0.08 mm	0.0031 in.
3rd gear	STD	0.065 – 0.115 mm	0.0020 – 0.0045 in.
	Limit	0.12 mm	0.0047 in.
Output shaft			
1st & 2nd gear journal diameter	Limit	43.984 mm	1.7317 in.
Runout	Limit	0.03 mm	0.0012 in.
Bushing outer diameter	Limit	47.910 mm	1.8862 in.
Shift fork to hub sleeve clearance	Limit	0.8 mm	0.031 in.
Synchronizer ring to gear clearance	Limit	0.8 mm	0.031 in.
Synchronizer ring distance			
1st gear	Limit	32.5 mm	1.280 in.
2nd gear	Limit	38.0 mm	1.496 in.
Output shaft snap ring thickness	Mark		
	0	2.40 – 2.45 mm	0.0945 – 0.0965 in.
	1	2.45 – 2.50 mm	0.0965 – 0.0984 in.
	2	2.50 – 2.55 mm	0.0984 – 0.1004 in.
	3	2.55 – 2.60 mm	0.1004 – 0.1024 in.
	4	2.60 – 2.65 mm	0.1024 – 0.1043 in.
	5	2.65 – 2.70 mm	0.1043 – 0.1063 in.
Counter 5th gear oil clearance	STD	0.015 – 0.068 mm	0.0006 – 0.0027 in.
	Limit	0.1 mm	0.0039 in.
Counter 5th gear journal diameter	Limit	31.984 mm	1.2592 in.
Rear bearing journal diameter	Limit	39.957 mm	1.5731 in.
Transfer adaptor oil seal depth		1.0 mm	0.039 in.
Reverse idler gear oil clearance	STD	0.065 – 0.103 mm	0.0026 – 0.0041 in.
	Limit	0.11 mm	0.0043 in.
Shift arm and reverse idler gear clearance	STD	0.1 – 0.3 mm	0.0039 – 0.0118 in.
	Limit	0.35 mm	0.0138 in.
Counter gear front snap ring thickness	Mark		
	0	2.05 – 2.10 mm	0.0807 – 0.0827 in.
	2	2.15 – 2.20 mm	0.0846 – 0.0866 in.
	4	2.25 – 2.30 mm	0.0886 – 0.0906 in.

Torque Specifications

Part tightened	kg-cm	ft-lb	N·m
Case cover × Transmission case	400	29	39
Reverse shift arm set nut	250	18	25
Front bearing retainer × Transmission case	170	12	17
Clutch housing × Transmission case	650	47	64
5th shift arm set bolt	380	27	37
Straight screw plug	250	18	25
Shift and select lever set bolt	380	27	37
Shift lever housing set bolt	380	27	37
Filler plug	600	43	59
Drain plug	600	43	59
Rear bearing retainer × Transmission case	185	13	18
Lock nut	1,160	84	114
Back-up light switch	410	30	40

DESCRIPTION

GENERAL

The A440F automatic transmission is a four-speed automatic transmission with a two-speed transfer, developed with the aim of producing an easy-driving 4WD vehicle. A lock-up mechanism is built into the torque converter.

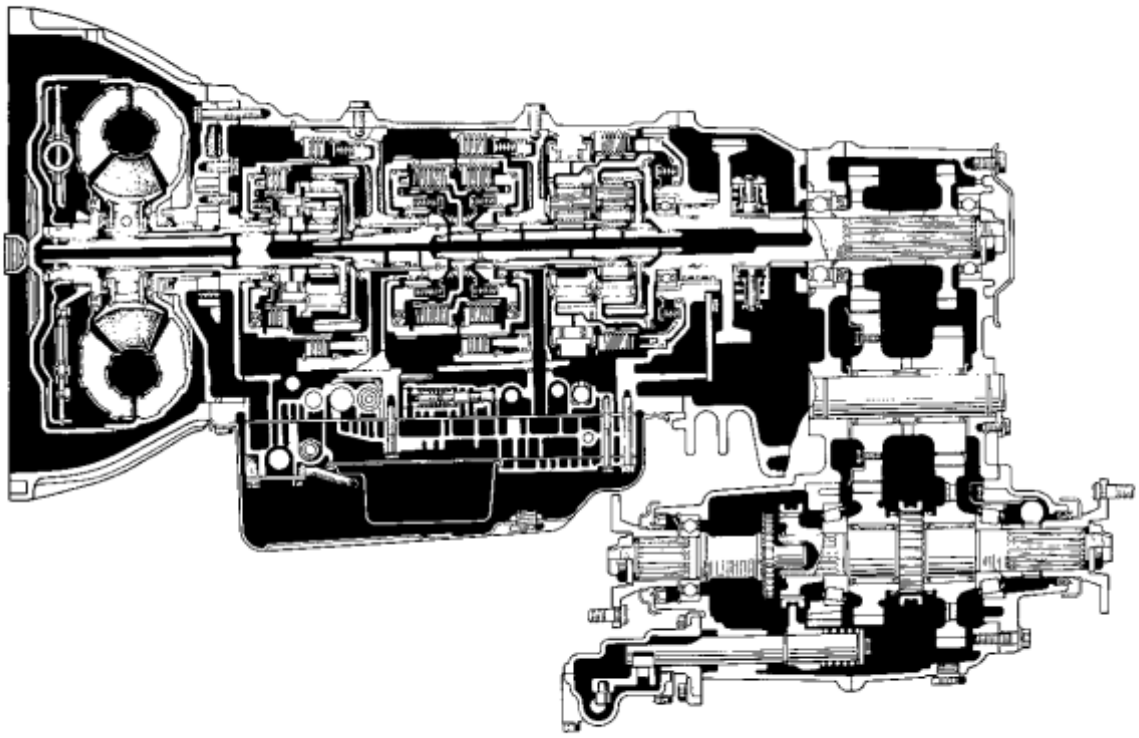

AT3916

The A440F transmission is mainly composed of the torque converter, the overdrive (hereafter called O/D) planetary gear unit, 3-speed planetary gear unit, 2-speed transfer and the hydraulic control system.

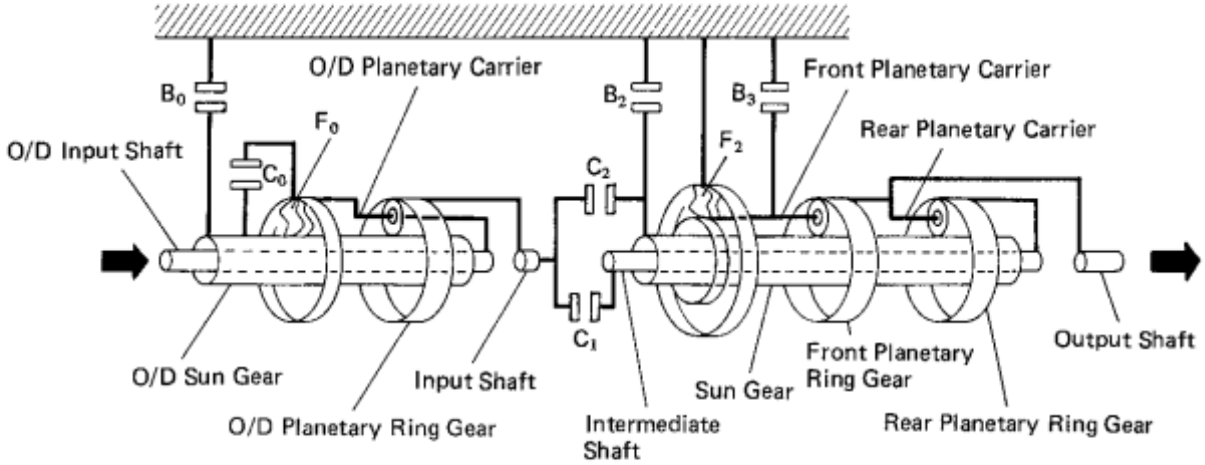

AT3917

General Specifications

Type of Transmission			A440F
Type of Engine			3F, 1HZ
Torque Converter	Stall Torque Ratio		1.88 : 1
	Lock-Up Mechanism		Equipped
Gear Ratio	1st Gear		2.950
	2nd Gear		1.530
	3rd Gear		1.000
	O/D Gear		0.717
	Reverse Gear		2.678
Number of Discs and Plates (Disc/Plate)	C_1	Forward Clutch	6/
	C_2	Rear Clutch	5/
	C_0	O/D Direct Clutch	3/
	B_2	2nd Brake	4/
	B_3	1st and Reverse Brake	6/
	B_0	O/D Brake	3/
Number of Sprags	F_2	No.2 One-Way Clutch	46
	F_0	O/D One-Way Clutch	22
Front Planetary Gear	No. of Sun Gear Teeth		28
	No. of Pinion Gear Teeth		23
	No. of Ring Gear Teeth		75
Rear Planetary Gear	No. of Sun Gear Teeth		44
	No. of Pinion Gear Teeth		20
	No. of Ring Gear Teeth		83
Overdrive Planetary Gear	No. of Sun Gear Teeth		35
	No. of Pinion Gear Teeth		27
	No. of Ring Gear Teeth		89
ATF	Type		ATF DEXRON®II
	Capacity litter (US qts, Imp.qts)	Total	15.0 (15.9, 13.2)
		Drain and Refill	6.0 (6.3, 5.3)

OPERATION

PLANETARY GEAR UNIT

The planetary gear unit is composed of three sets of planetary gears, three clutched which transmit power to the planetary gears, and three brakes and two one-way clutches which immobilize the planetary carrier and planetary sun gear.
Power from the engine transmitted the input shaft via the torque converter is than transmitted to the planetary gears by the operation of the clutches. By operation of the brakes and one-way clutches, either the planetary carrier or the planetary sun gear is immobilized, altering the speed of revolution of the planetary gear unit. Shift change is carried out by altering the combination of clutch and brake operation.
Each clutch and brake operates by hydraulic pressure; gear position is decided according to the throttle opening angle and vehicle speed, and shift change automatically occurs.

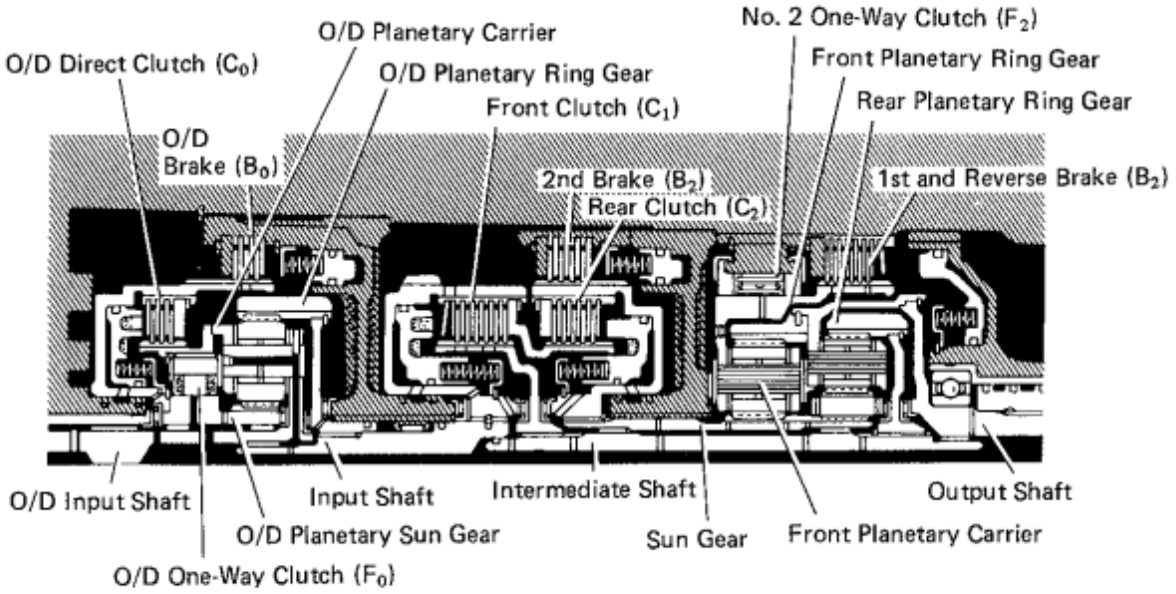

AT3918

OPERATION OF EACH ELEMENT

NOMENCLATURE	OPERATION
O/D Direct Clutch (C_0)	Connects overdrive sun gear and overdrive carrier
O/D Brake (B_0)	Prevents overdrive sun gear from turning either clockwise or counterclockwise
O/D One-Way Clutch (F_0)	When transmission is being driven by engine, connects overdrive sun gear and overdrive carrier
Front Clutch (C_1)	Connects input shaft and intermediate shaft
Rear Clutch (C_2)	Connects input shaft and front & rear planetary sun gear
2nd Brake (B_2)	Prevents front & rear planetary sun gear from turning either clockwise or counterclockwise
1st & Reverse Brake (B_3)	Prevents front planetary carrier from turning either clockwise or counterclockwise
No.2 One-Way Clutch (F_2)	Prevents front planetary carrier from turning counterclockwise

OPERATING CONDITION FOR EACH GEAR

○.....Operating

Shift lever position	Gear position	C_0	C_1	C_2	B_0	B_2	B_3	F_0	F_2
P	Parking	○						○	
R	Reverse	○		○			○	○	
N	Neutral	○						○	
D	1st	○	○					○	○
	2nd		○			○		○	
	3rd	○	○	○				○	
	O/D		○	○	○				
3	1st	○	○					○	○
	2nd		○			○		○	
	3rd	○	○	○				○	
2	2nd	○	○			○		○	
L	1st	○	○				○	○	○

FUNCTION OF COMPONENTS

The conditions of operation for each gear position are shown on the following illustration:

D or 3 Range 1st Gear

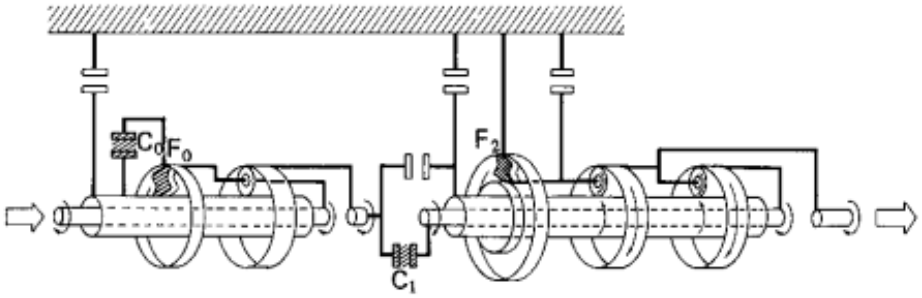

AT5949

D or 3 Range 2nd Gear

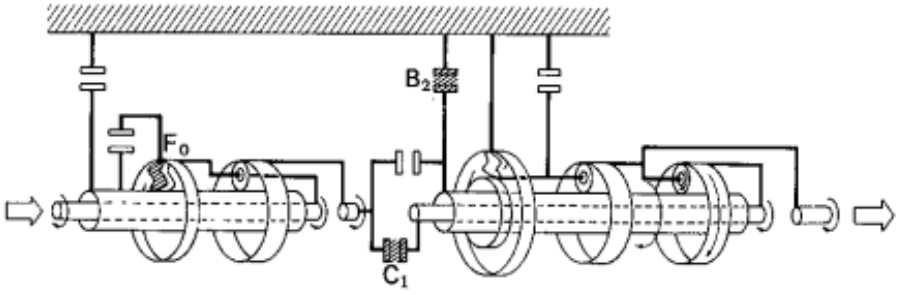

AT5950

FUNCTION OF COMPONENTS (Cont'd)

D or 3 Range 3rd Gear

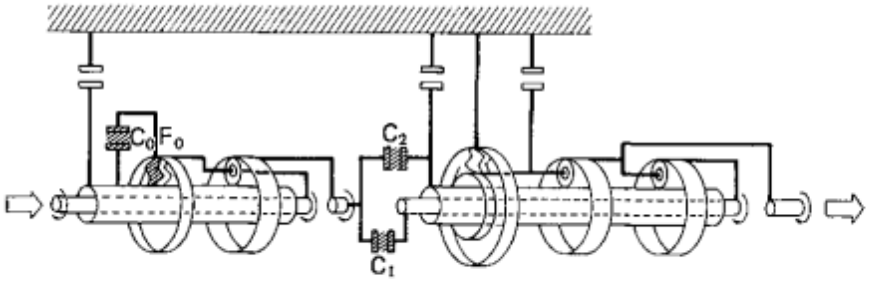

AT5951

D Range O/D

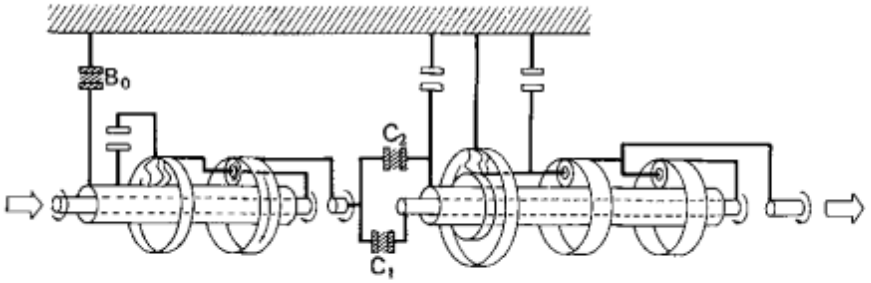

AT5952

2 Range 2nd Gear

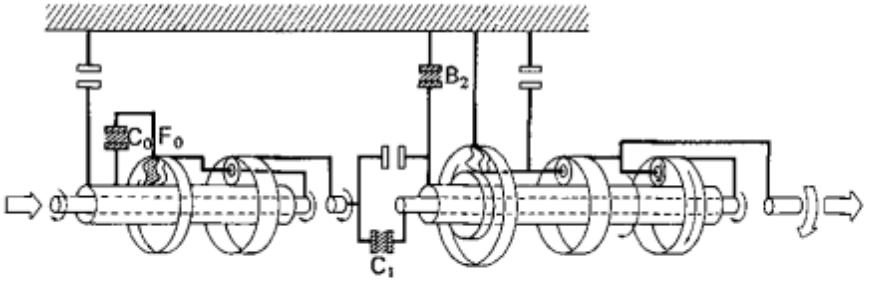

AT5953

L Range 1st Gear

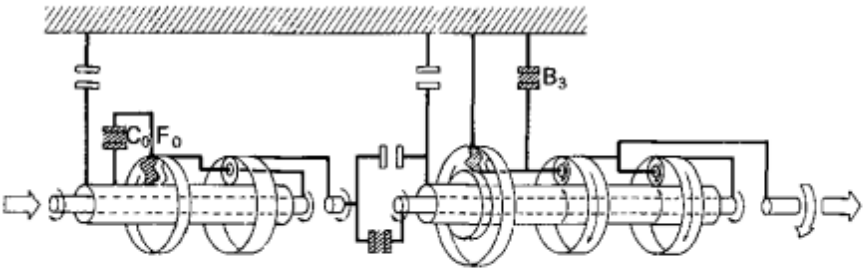

AT5954

R Range Reverse Gear

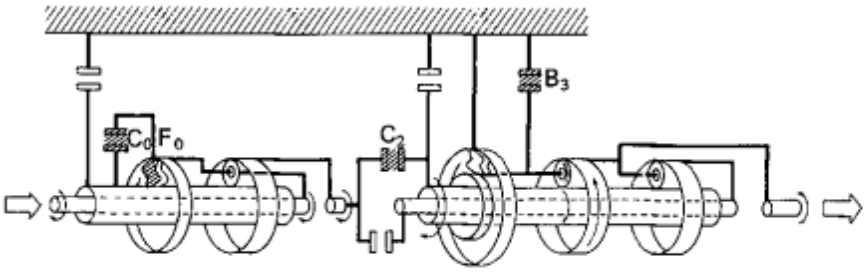

AT5955

Hydraulic Control System

The hydraulic control system is composed of the oil pump, the valve body, the accumulators, the clutches and brakes, as well as the fluid passages which connect all of these components.
Based on the hydraulic pressure created by the oil pump, the hydraulic control system governs the hydraulic pressure acting on the torque converter, clutches and brakes in accordance with the vehicle driving conditions.

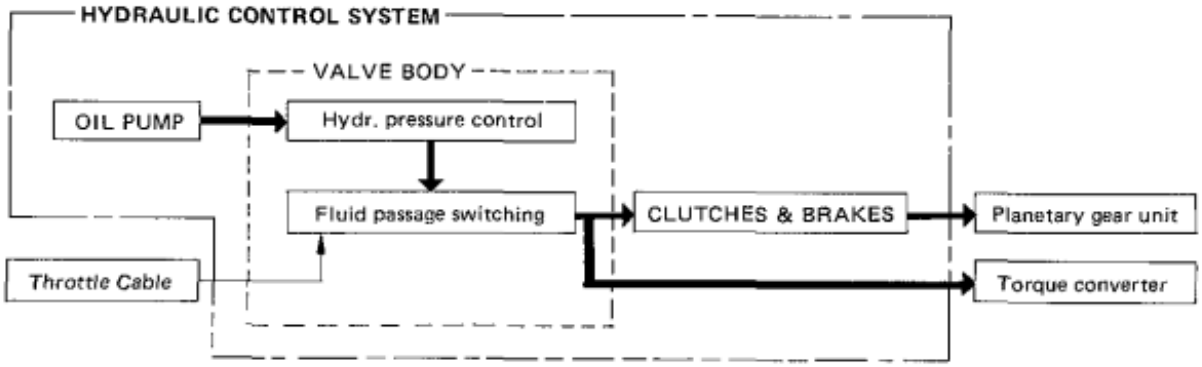

A.T.P. (Automatic Transmission Parking) Indicator

The propeller shaft and wheels are free even when the transmission shift lever is set to "P" a long as the transfer shift lever is in "neutral" position. The A.T.P. indicator lights up to warn the driver that the propeller shaft and wheels are not locked. If the A.T.P. indicator light goes on, the transfer shift lever should be shifted to H2 or L4 position.

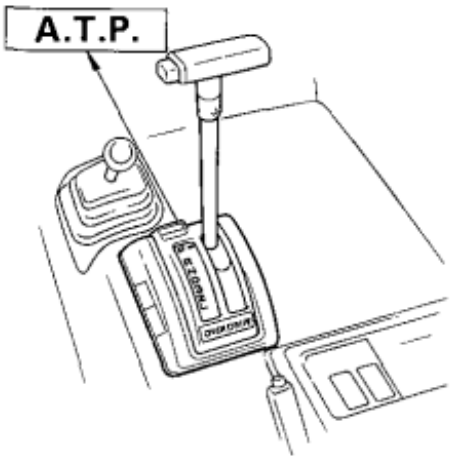

AT3919

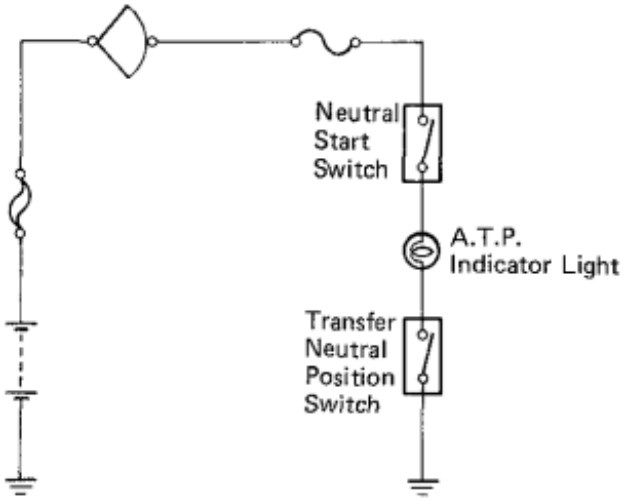

AT3920

TROUBLESHOOTING

General Notes

1. Troubles occuring with the automatic transmission can be caused by either the engine or the transmission itself. These two areas should be distinctly isolated before proceeding with troubleshooting.
2. Troubleshooting should begin with the simplest operation, working up in order of difficulty, but first determine whether the trouble lies within the engine, electrical control or transmission.
3. Proceed with the inspection as follows:

PRELIMINARY CHECK (See page AT-11)
(a) Check the tire inflation.
(b) Check the idle speed.
(c) Check the fluid level and fluid condition.
(d) Check the throttle cable mark.
(e) Check the shift linkage.
(f) Check the neutral start switch.

↓

STALL TEST (See page AT-13)
Check the engine and torque converter.

↓

TIME LAG TEST (See page AT-14)
Check the automatic transmission (each clutch, brake and gear) for wear.

↓

HYDRAULIC TEST (See page AT-15)
Measure the line pressure and make a basic check of fluid circuit.

↓

ROAD TEST (See page AT-19)
Confirm if trouble lies within automatic transmission. If noisy or vibrating, the possible cause could be with the compressor, engine, propeller shafts, tires, etc.

General Troubleshooting

Problem	Possible cause	Remedy	Page
Fluid discolored or smells burnt	Fluid contaminated	Replace fluid	AT-9
	Torque converter faulty	Replace torque converter	AT-37
	Transmission faulty	Disassemble and inspect transmission	
Vehicle does not move in any forward range or reverse	Manual linkage out of adjustment	Adjust linkage	AT-12
	Valve body or primary regulator faulty	Inspect valve body	AT-24
	Parking lock pawl faulty	Inspect parking lock pawl	
	Torque converter faulty	Replace torque converter	AT-37
	Converter drive plate broken	Replace drive plate	AT-37
	Oil pump intake strainer blocked	Clean strainer	AT-24
	Transmission faulty	Disassemble and inpsect transmission	
Shift lever position incorrect	Manual linkage out of adjustment	Adjust linkage	AT-12
	Manual valve and lever faulty	Inspect valve body	AT-24
	Transmission faulty	Disassemble and inspect tranmission	
Harsh engagement into any drive range	Throttle cable out of adjustment	Adjust throttle cable	AT-12
	Valve body or primary regulator faulty	Inspect valve body	AT-24
	Accumulator pistons faulty	Inspect accumulator pistons	
	Transmisssion faulty	Disassemble and inspect transmission	
Delayed 1-2, 2-3 or 3-O/D up-shift, or down-shifts from O/D-3 or 3-2 and shifts back to O/D or 3	Throttle cable out of adjustment	Adjust throttle cable	AT-12
	Throttle cable and cam faulty	Inspect throttle cable and cam	AT-27
	Governor faulty	Inspect governor	
	Valve body faulty	Inspect valve body	AT-24
Slips on 1-2, 2-3 or 3-O/D up shift, or slips or shudders on acceleration	Manual linkage out of adjustment	Adjust linkage	AT-12
	Throttle cable out of adjustment	Adjust throttle cable	AT-12
	Valve body faulty	Inspect valve body	AT-24
	Transmission faulty	Disassemble and inspect transmission	
Drag, binding or tie-up on 1-2, 2-3 pr 3-O/D up-shift	Manual linkage out of adjustment	Adjust linkage	AT-12
	Valve body faulty	Inspect valve body	AT-24
	Transmission faulty	Disassemble and inspect transmission	

General Troubleshooting (Cont'd)

Problem	Possible cause	Remedy	Page
No lock-up	Valve body faulty	Inspect valve body	AT-24
	Torque converter faulty	Replace torque converter	AT-37
	Transmission faulty	Disassemble and inspect transmission	
Harsh down-shift	Throttle cable out of adjustment	Adjust throttle cable	AT-12
	Throttle cable and cam faulty	Inspect throttle cable and cam	AT-27
	Accumulator pistons faulty	Inspect accumulator pistons	
	Valve body faulty	Inspect valve body	AT-24
	Transmission faulty	Disassemble and inspect transmission	
No down-shift when coasting	Governor faulty	Inspect governor	
	Valve body faulty	Inspect valve body	AT-24
Down-shift occurs too quickly or too late while coasting	Throttle cable out of adjustment	Adjust throttle cable	AT-12
	Governor faulty	Inspect governor	
	Valve body faulty	Inspect valve body	AT-24
	Transmission faulty	Disassemble and inspect transmission	
No O/D-3, 3-2 or 2-1 kick-down	Throttle cable out of adjustment	Adjust throttle cable	AT-12
	Governor faulty	Inspect governor	
	Valve body faulty	Inspect valve body	AT-24
No engine braking in 2 or L range	Valve body faulty	Inspect valve body	AT-24
	Transmission faulty	Disassemble and inspect transmission	
Vehicle does not hold in P	Manual linkage out of adjustment	Adjust linkage	AT-12
	Parking lock pawl cam and spring faulty	Inspect cam and spring	

Preliminary Check

1. CHECK FLUID LEVEL

HINT:

- The vehicle must have driven so that the engine and transmission are at normal operating temperature.

(Fluid temperature: 70 — 80°C or 158 — 176°F)

- Only use the COOL range on the dipstick as a rough reference when the fluid is replaced or the engine does not run.

(a) Park the vehicle on a level surface, set the parking brake.

(b) With the engine idling, shift the shift lever into all positions from P to L position and return to P position.

(c) Pull out the transmission dipstick and wipe it clean.

(d) Push it back fully into the tube.

(e) Pull it out and check that the fluid level is on the HOT range.

If the level is at the low side, add fluid.

Fluid type: ATF DEXRON® II

NOTICE: Do not overfill.

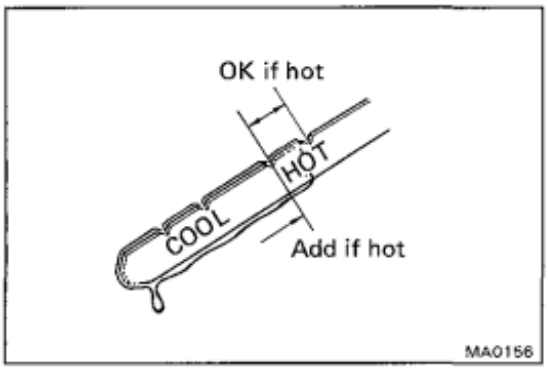

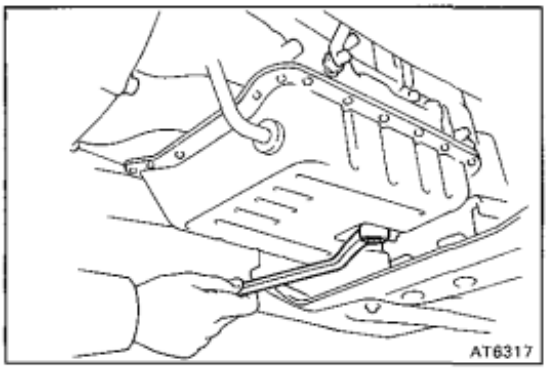

2. CHECK FLUID CONDITION

If the fluid smells burnt or is black, replace it in the following procedure.

(a) Remove the drain plug and drain the fluid.

(b) Reinstall the drain plug securely.

Torque: 280 kg-cm (20 ft-lb, 27 N·m)

(c) With the engine OFF, add new fluid through the oil filler tube.

Fluid type: ATF DEXRON® II

Capacity: Total
w/o Oil cooler
15.0 litters (15.9 US qts, 13.2 Imp. qts)
w/ Oil cooler
15.4 litters (16.3 US qts, 13.6 Imp. qts)
Drain and refill
6.0 litters (6.3 US qts, 5.3 Imp. qts)

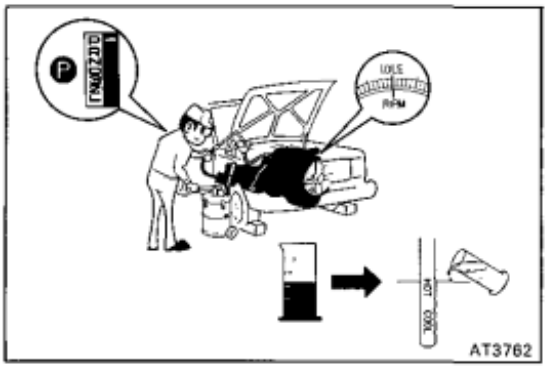

(d) Start the engine and shift the shift lever into all positions from P to L position and then shift into P position.

(e) With the engine idling, check the fluid level. Add fluid up to the COOL level on the dipstick.

(f) Check the fluid level with the normal operating temperature (70 — 80°C or 158 — 176°F) and add as necessary.

NOTICE: Do not overfill.

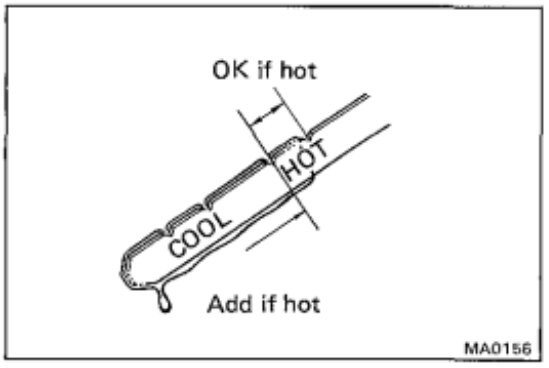

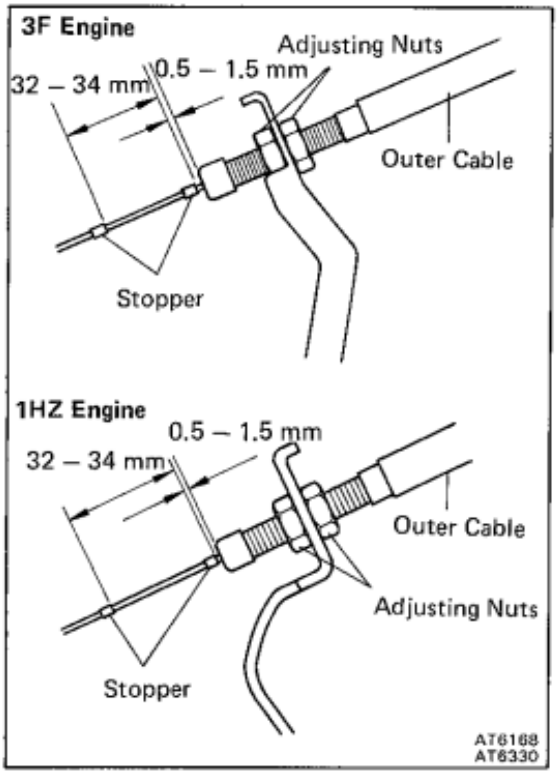

3. INSPECT THROTTLE CABLE

(a) Check that the throttle cable is installed correctly and not bent.

(b) With the throttle valve fully closed, measure the distance between the end of the boot and stopper on the cable.

Standard distance:

Fully closed	**0.5 – 1.5 mm (0.020 – 0.059 in.)**
Fully opened	**32 – 34 mm (1.260 – 1.339 in.)**

If the distance is not standard, adjust the cable by the adjusting nuts.

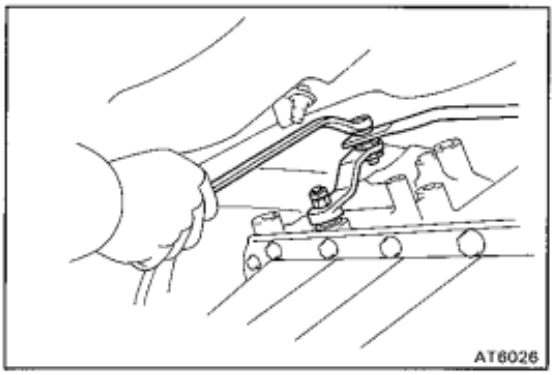

4. INSPECT TRANSMISSION SHIFT LEVER POSITION

When shifting the shift lever from the N position to other positions, check that the lever can be shifted smoothly and accurately to each position and that the position indicator correctly indicates the position.

If the indicator is not aligned with the correct position, carry out the following adjustment procedures.

(a) Loosen the nut on the control rod.

(b) Push the control shaft lever fully toward the rear of the vehicle.

(c) Return the control shaft lever two notches to N position.

(d) Set the shift lever to N position.

(e) While holding the shift lever lightly toward the R position side, tighten the control rod nut.

(f) Start the engine and make sure that the vehicle moves forward when shifting the lever from the N to D position and reverse when shifting it to the R position.

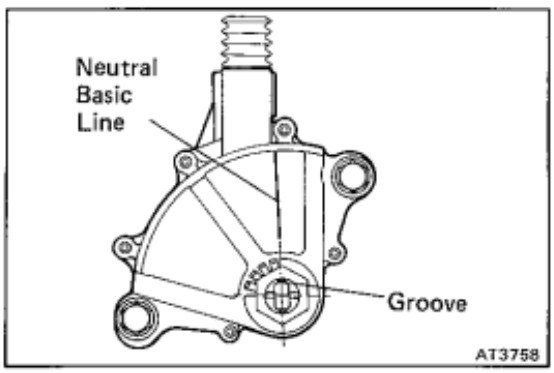

5. INSPECT NEUTRAL START SWITCH

Check that the engine can be started with the shift lever only in the N or P position, but not in other positions.

If not as started above, carry out the following adjustment procedures.

(a) Loosen the neutral start switch bolts and set the shift lever to the N position.

(b) Align the groove and neutral basic line.

(c) Hold in position and tighten the bolts.

Torque: 130 kg-cm (9 ft-lb, 13 N·m)

Mechanical System Tests

STALL TEST

The object of this test is to check the overall performance of the transmission and engine by measuring the stall speeds in the D and R ranges.

NOTICE:

- **Perform the test at normal operating fluid temperature (50 — 80°C or 122 — 176°F).**
- **Do not continuously run this test longer than 5 seconds.**

MEASURE STALL SPEED

(a) Warm up the transmission fluid.

(b) Chock the front and rear wheels.

(c) Connect a tachometer to the engine.

(d) Fully apply the parking brake.

(e) Step down strongly on the brake pedal with your left foot.

(f) Start the engine.

(g) Shift into the D range. Step all the way down on the accelerator pedal with your right foot. Quickly read the stall speed at this time.

Stall speed: 3F Engine 1850 ± 150 rpm
1HZ Engine 1900 ± 150 rpm

(h) Perform the same test in R range.

EVALUATION

(a) If the stall speed is the same for both ranges but lower than specified value:

- Engine output may be insufficient
- Stator one-way clutch is not operating properly

HINT: If more than 600 rpm below the specified value, the torque converter could be faulty.

(b) If the stall speed in D range is higher than specified:

- Line pressure too low
- Front clutch slipping
- No.2 one-way clutch not operating properly
- O/D one-way clutch not operating properly

(c) If the stall speed in R range is higher than specified:

- Line pressure too low
- Rear clutch slipping
- First and reverse brake slipping
- O/D one-way clutch not operating properly

(d) If the stall speed in both R and D ranges are higher than specified:

- Line pressure too low
- Improper fluid level
- O/D one-way clutch not operating properly

TIME LAG TEST

If the shift lever is shifted while the engine is idling, there will be a certain time lapse or lag before the shock can be felt. This is used for checking the condition of the O/D direct clutch, front clutch, rear clutch and first and reverse brakes.

NOTICE:

- **Perform the test at normal operating fluid temperature (50 — 80°C or 122 — 176°F)**
- **Be sure to allow one minute intervals between tests.**
- **Make three measurements and take the average value.**

MEASURE TIME LAG

(a) Fully apply the parking brake.

(b) Start the engine and check the idle speed.

Idle speed: 3F Engine 750 rpm
1HZ Engine 710 rpm

(c) Shift the shift lever from N to D position. Using a stop watch, measure the time it takes from shifting the lever until the shock is felt.

Time lag: Less than 0.7 seconds

(d) In same manner, measure the time lag N → R.

Time lag: Less than 1.2 seconds

EVALUATION

(a) If N → D time lag is longer than specified:

- Line pressure too low
- Front clutch worn
- O/D one-way clutch not operating properly

(b) If N → R time lag is longer than specified:

- Line pressure too low
- Rear clutch worn
- First and reverse brake worn
- O/D one-way clutch not operating properly

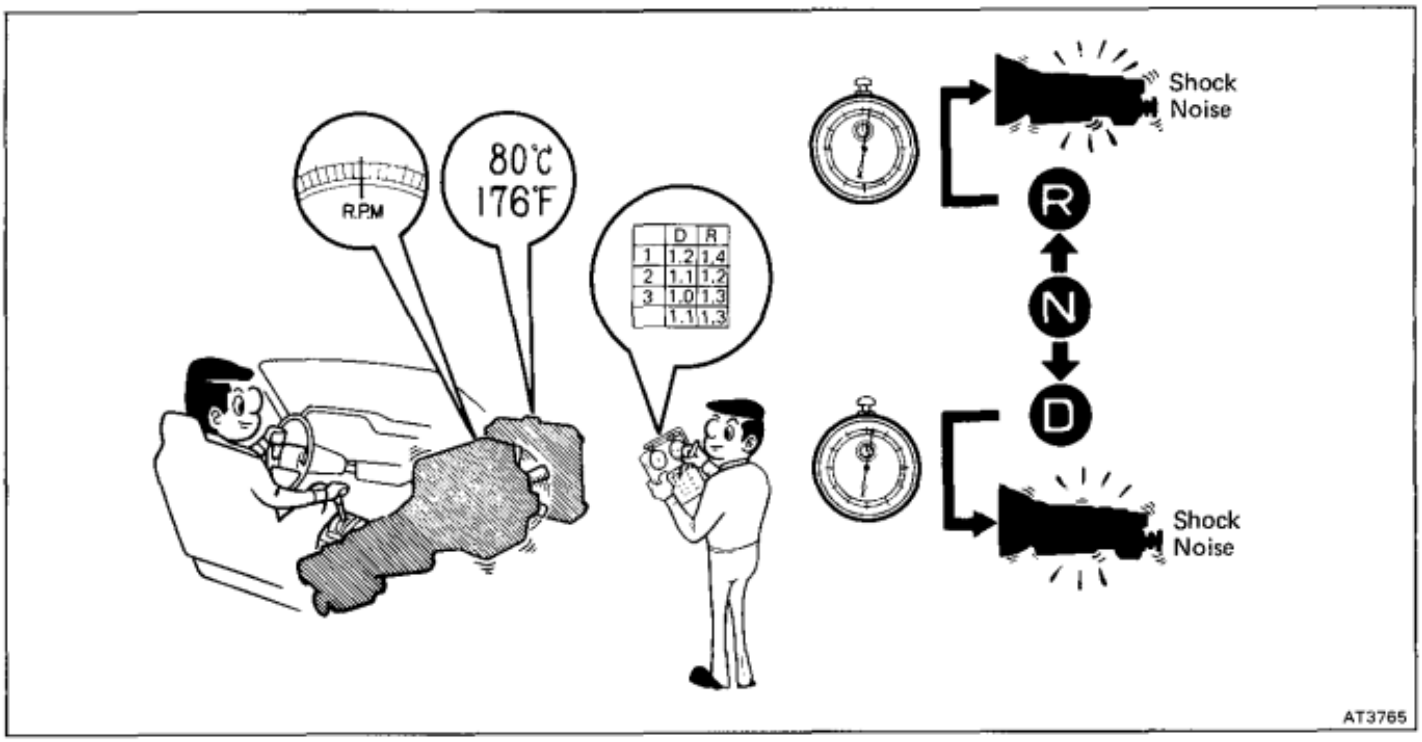

HYDRAULIC TEST

1. MEASURE LINE PRESSURE

NOTICE: Perform the test at normal operating fluid temperature (50 — 80°C or 122 — 176°F)

(a) Warm up the transmission fluid.

(b) Remove the transmission case test plug and connect the hydraulic pressure gauge.

SST 09992-00094 (Oil pressure gauge)

(c) Fully apply the parking brake and chock the four wheels.

(d) Start the engine and check idling rpm.

(e) Step down strongly on the brake pedal with your left foot and shift into D range.

(f) Measure the line pressure when the engine is idling.

(g) Press the accelerator pedal all the way down. Quickly read the highest line pressure when engine speed reaches stall speed.

(h) In the same manner, perform the test in R range.

kg/cm^2 (psi, kPa)

D range		R range	
Idling	Stall	Idling	Stall
3.7 — 4.3 (53 — 61, 363 —422)	11.1 — 13.6 (158 — 193, 1,089 — 1,344)	4.5 — 5.5 (64 —78, 441 — 539)	14.0 — 17.0 (199 — 242, 1,373 — 1,667)

If the measured pressures are not up to specified values, recheck the throttle cable adjustment and perform a retest.

EVALUATION

(a) If the measured values at all ranges are higher than specified:
- Throttle cable out of adjustment
- Throttle valve defective
- Regulator valve defective

(b) If the measured values at all ranges are lower than specified:
- Throttle cable out of adjustment
- Throttle valve defective
- Regulator valve defective
- Oil pump defective
- O/D direct clutch defective

(c) If pressure is low in the D range only:
- D range circuit fluid leakage
- Front clutch defective

(d) If pressure is low in the R range only:
- R range circuit fluid leakage
- Rear clutch defective
- First and reverse brake defective

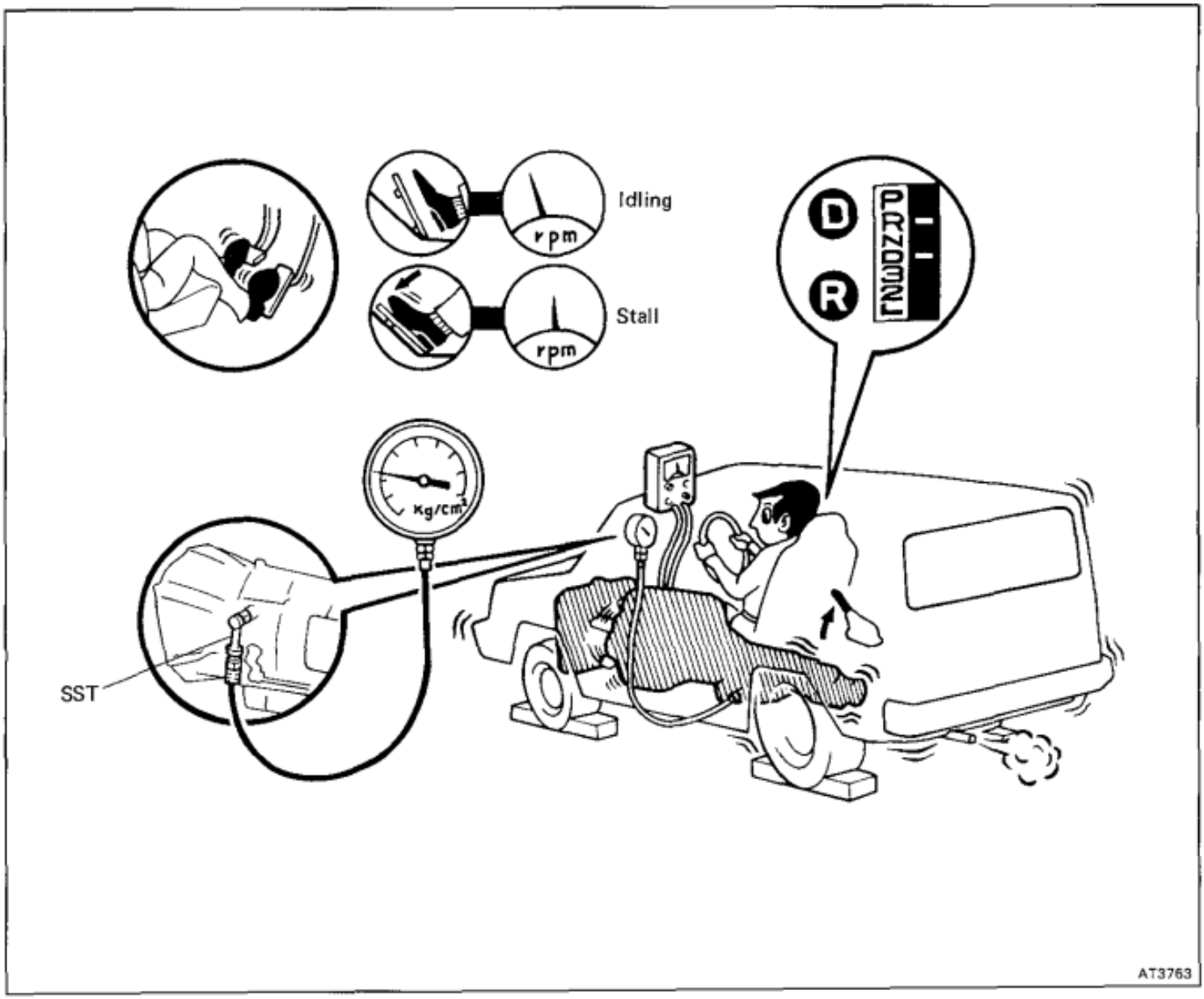
Idling
rpm
Stall
rpm
D
R
P N D 2 1
Kg/cm²
SST
AT3763

2. MEASURE GOVERNOR PRESSURE

NOTICE:

- **Perform the test at normal operating fluid temperature (50 — 80°C or 122 — 176°F).**
- **Measurement can be made with a 1,000 rpm test, but if tests are to be made at 1,800 rpm and 3,500 rpm, it would be safer to do it on road or using a chassis dynamometer because an on-stand test could be hazardous.**

(a) Warm up the transmission fluid.

(b) Shift the transfer shift lever to the "H2" position.

(c) Chock the front wheels.

(d) Jack up rear of the vehicle and support it on stands.

(e) Remove the transmission case test plug and connect the hydraulic pressure gauge.

SST 09992-00094 (Oil pressure gauge)

(f) Check that the parking brake is not applied.

(g) Start the engine.

(h) Shift into the D range and measure the governor pressure at the speeds specified in the table.

3F engine

Differential gear ratio 3.727

Output shaft rpm	Vehicle speed (Reference) km/h (mph) Tire size 7.00 — 15	Governor pressure kg/cm² (psi, kPa)
1,000	35 (22)	0.8 — 1.2 (11 — 17, 78 — 118)
1,800	64 (40)	2.0 — 2.4 (28 — 34, 196 — 235)
3,500	125 (78)	5.7 — 6.3 (81 — 90, 559 — 618)

Differential gear ratio 4.111

	7.50R16-8	7.00-16-6	31 × 10.5R-15	Governor pressure kg/cm² (psi, kPa)
1,000	35 (22)	33 (21)	34 (21)	0.8 — 1.2 (11 — 17, 78 — 118)
1,800	63 (39)	57 (35)	61 (38)	2.0 — 2.4 (28 — 34, 196 — 235)
3,500	123 (76)	110 (68)	119 (74)	5.7 — 6.3 (81 — 90, 559 — 618)
	7.50-16-6	—	—	Governor pressure kg/cm² (psi, kPa)
1,000	35 (22)	—	—	0.8 — 1.2 (11 — 17, 78 — 118)
1,800	64 (40)	—	—	2.0 — 2.4 (28 — 34, 196 — 235)
3,500	124 (77)	—	—	5.7 — 6.3 (81 — 90, 559 — 618)

1HZ engine

Differential gear ratio 4.111

Output shaft rpm	Vehicle speed (Reference) km/h (mph) Tire size 7.50R16-6	265175R-15	Governor pressure kg/cm² (psi, kPa)
1,000	35 (22)	34 (21)	0.8 — 1.2 (11 — 17, 78 — 118)
1,800	64 (40)	61 (38)	2.0 — 2.4 (28 — 34, 196 — 235)
3,500	124 (77)	118 (74)	5.7 — 6.3 (81 — 90, 559 — 618)

EVALUATION

If governor pressure is defective:

- Line pressure defective
- Fluid leakage in governor pressure circuit
- Governor valve operation defective

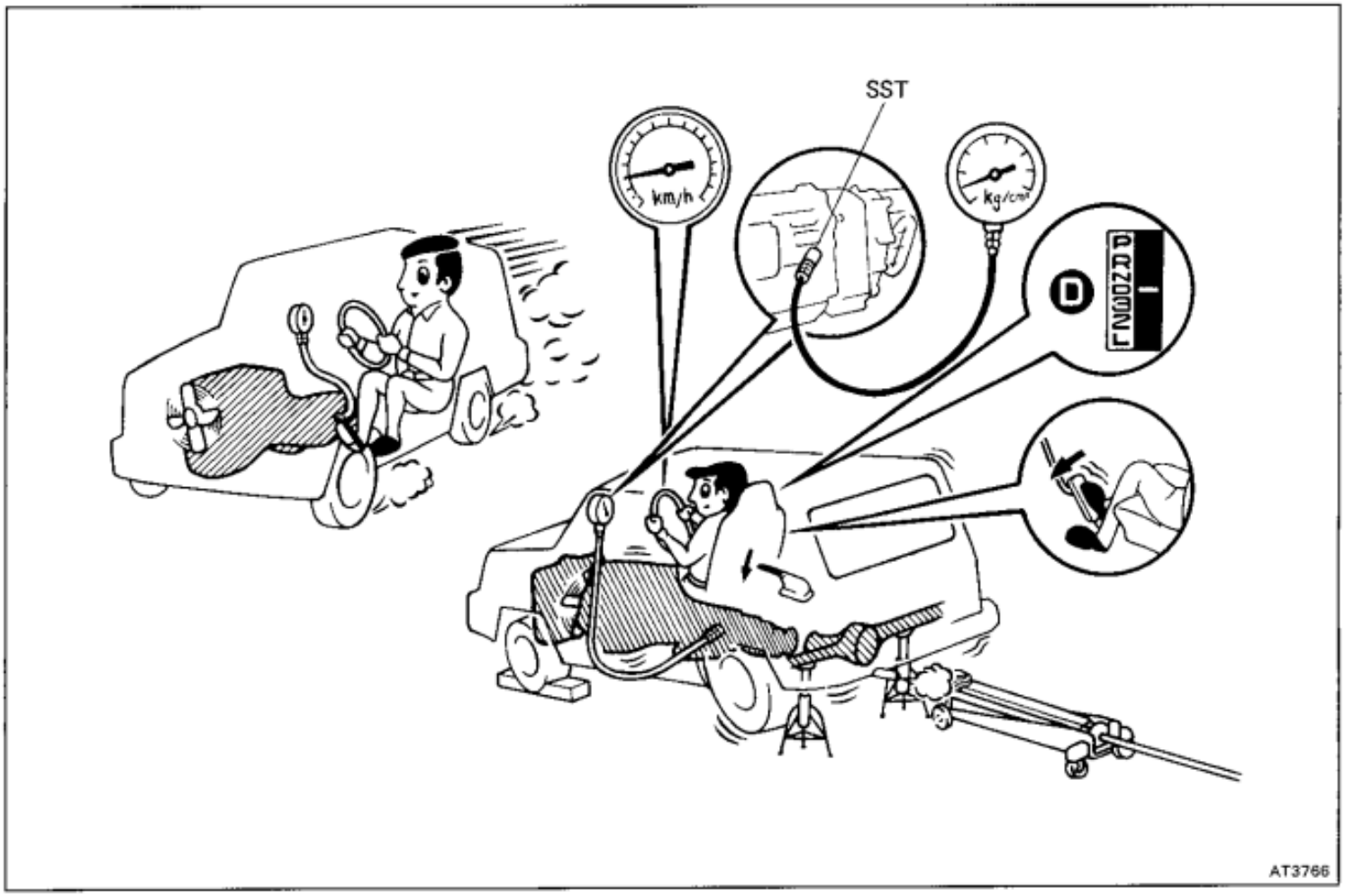

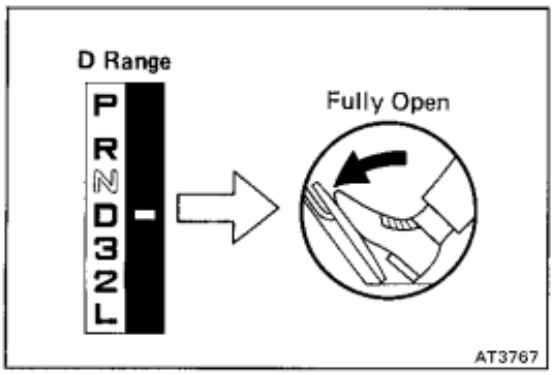

ROAD TEST

NOTICE: Perform the test at normal operating fluid temperature (50 — 80°C or 122 — 176°F)

1. D RANGE TEST

Shift into the D range and while driving with the accelerator pedal held constant at full throttle valve opening position, check the following points:

(a) Check to see that the 1 → 2, 2 → 3 and 3 → O/D up-shifts take place, and shift points should conform to those shown in the automatic shift schedule.

EVALUATION

(1) If there is no 1 → 2 up-shift:
- Governor valve is defective
- 1-2 shift valve is stuck

(2) If there is no 2 → 3 up-shift:
- Governor valve is defective
- 2-3 shift valve is stuck

(3) If there is no 3 → O/D up-shift:
- Governor valve is defective
- 3-4 shift valve is stuck

(4) If the shift point is defective:
- Throttle cable is out-of-adjustment
- Throttle valve, 1-2 shift valve, 2-3 shift valve, 3-4 shift valve etc., are defective

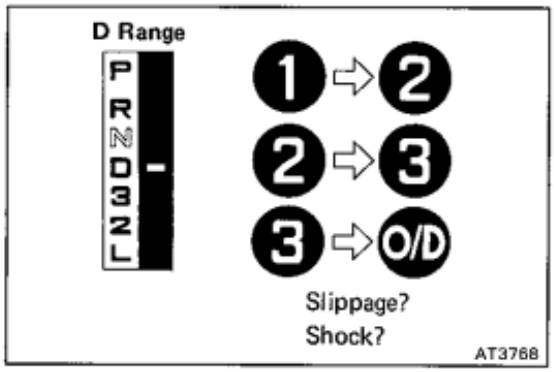

(b) In the same manner, check the shock and slip at the 1 → 2, 2 → 3 and 3 → O/D up-shifts.

EVALUATION

If the shock is excessive:
- Line pressure is too high
- Accumulator is defective
- Check ball is defective

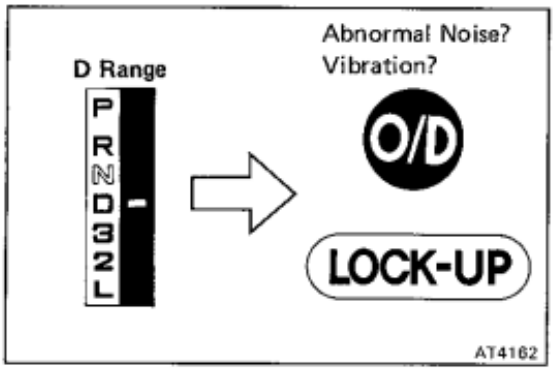

(c) Run in the O/D gear or lock-up of the D range and check for abnormal noise and vibration.

HINT: The check for the cause of abnormal noise and vibration must be made with extreme care as it could also be due to loss of balance in the propeller shafts, differentials, torque converter, etc.

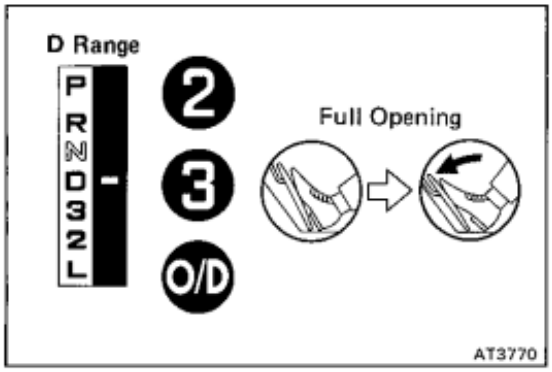

(d) While running in the 2nd, 3rd, or O/D gear of the D range, check to see that the possible kick-down vehicle speed limits for 2 → 1, 3 → 2 or O/D → 3 kick-downs conform to those indicated on the automatic shift schedule.

(e) Check for abnormal shock and slip at kick-down.

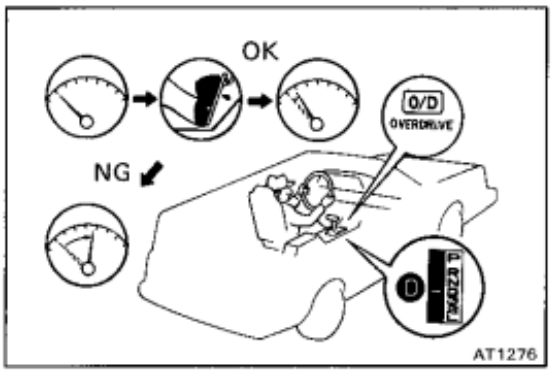

(f) Check for the lock-up mechanism.

(1) Drive in O/D gear of the D range, at a steady speed (lock-up ON) of about 85 km/h (53 mph).

(2) Lightly depress the accelerator pedal and check that the engine rpm does not change abruptly.

If there is a big jump in engine rpm, there is no lock-up.

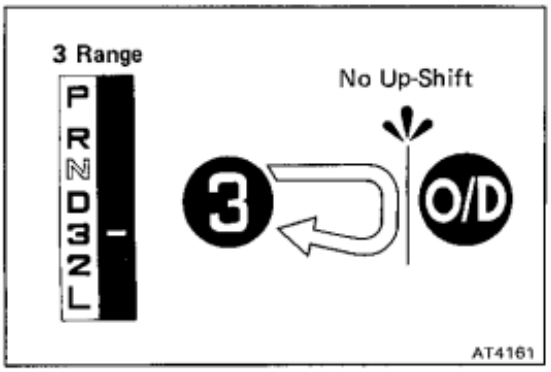

2. 3 RANGE TEST

(a) While running in th 3rd gear of the 3 range, check to see that there is no up-shift to the O/D gear.

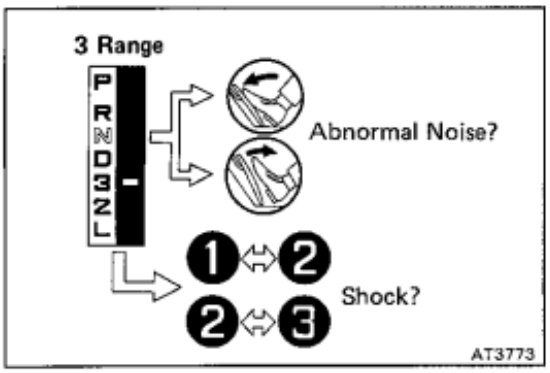

(b) Check for abnormal noise at acceleration and deceleration, and for shock at up-shift and down-shift.

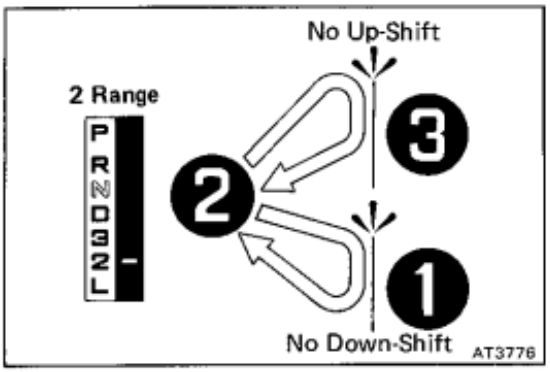

3. 2 RANGE TEST

(a) While running in the 2nd gear of the 2 range, check to see that there is no up-shift to the 3rd gear.

(b) While running in the 2nd gear of the 2 range, check to see that there is no down-shift to the 1st gear.

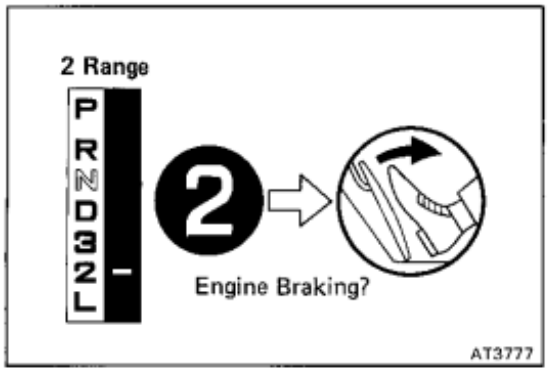

(c) While running in the 2nd gear of the 2 range, release the accelerator pedal and check the engine braking effect.

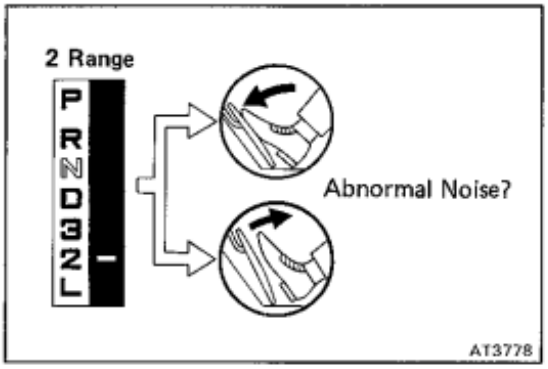

(d) Check for abnormal noise during acceleration and deceleration.

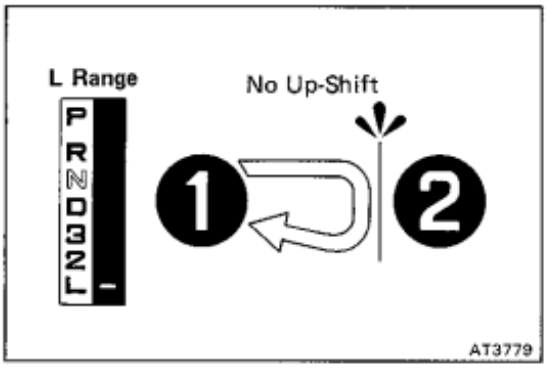

4. L RANGE TEST

(a) While running in the L range, check to see that there is no up-shift to the 2nd gear.

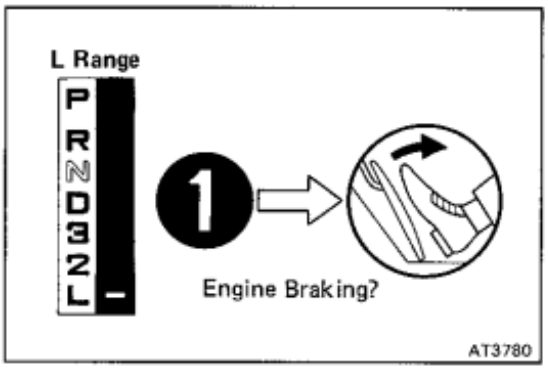

(b) While running in the L range, release the accelerator pedal and check the engine braking effect.

EVALUATION

If there is no engine braking effect:

- First and reverse brake is defective

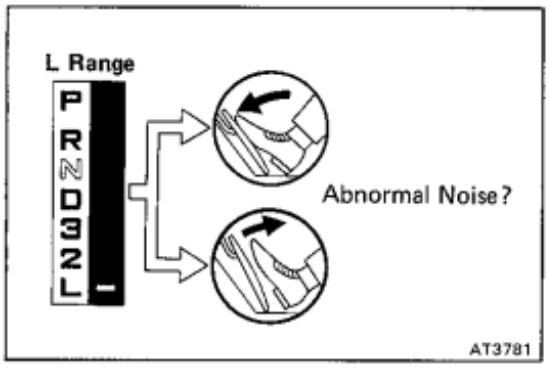

(c) Check for abnormal noise during acceleration and deceleration.

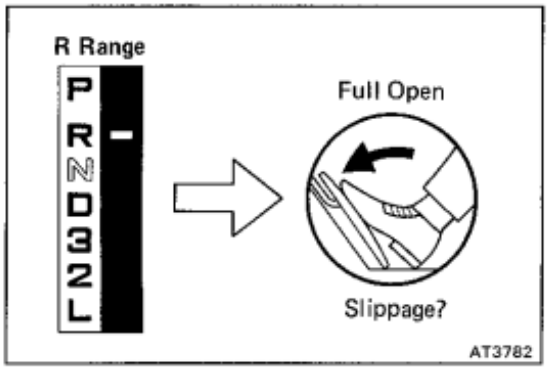

5. R RANGE TEST

Shift into the R range and, while starting at full throttle, check for slipping.

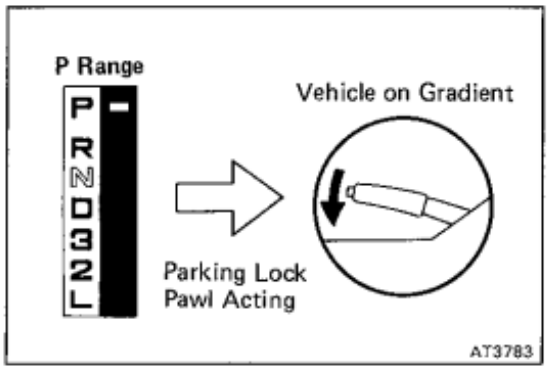

6. P RANGE TEST

Stop the vehicle on a gradient (more than 9 %) and after shifting into the P range, release the parking brake.

Then check to see that the parking lock pawl holds the vehicle in place.

Automatic Shift Schedule

3F engine

km/h (mph)

Differential gear ratio	Tire size	D range								2 range	1 range
		Throttle valve fully open [ ] Opening 25 %									
		1 → 2	2 → 3	3 → 4	[Lock-up ON]	[Lock-up OFF]	4 → 3	3 → 2	2 → 1	3 → 2	2 → 1
3.727	7.00 - 15 - 6	32 - 47 (20 - 29)	78 - 93 (48 - 58)	124 - 138 (77 - 86)	73 - 86 (45 - 53)	68 - 80 (42 - 50)	114 - 128 (71 - 80)	68 - 83 (42 - 52)	27 - 41 (17 - 25)	81 - 95 (50 - 59)	44 - 58 (27 - 36)
4.11	7.00 - 16 - 6	30 - 44 (19 - 27)	73 - 87 (45 - 54)	116 - 129 (72 - 80)	69 - 81 (43 - 50)	64 - 75 (40 - 47)	107 - 120 (66 - 75)	64 - 79 (40 - 49)	25 - 38 (16 - 24)	76 - 89 (47 - 55)	41 - 54 (25 - 34)
4.111	31×10.50 R15	31 - 44 (19 - 27)	75 - 88 (45 - 55)	118 - 131 (73 -81)	70 - 82 (43 - 51)	65 - 77 (40 - 48)	108 - 122 (67 - 76)	65 - 79 (40 - 49)	26 - 39 (16 - 24)	77 - 91 (48 - 57)	42 - 55 (26 - 34)
4.111	7.50 - 16 - 6	32 - 46 (20 - 29)	76 - 90 (47 - 56)	121 - 135 (75 - 84)	72 - 84 (45 - 52)	66 - 78 (41 - 48)	111 - 125 (69 - 78)	67 - 81 (42 - 50)	27 - 40 (17 - 25)	80 - 94 (50 - 58)	43 - 57 (27 - 35)
4.111	7.50R - 16 - 8	32 - 46 (20 - 29)	77 - 91 (48 - 57)	122 - 136 (76 - 85)	72 - 85 (45 - 53)	67 - 79 (42 - 49)	112 - 126 (70 - 78)	67 - 81 (42 - 50)	27 - 40 (17 - 25)	80 - 94 (50 - 58)	43 - 57 (27 - 35)

1HZ engine

4.111	7.50R - 16 - 6	32 - 46 (20 - 29)	77 - 91 (48 - 57)	122 - 136 (76 - 85)	72 - 85 (45 - 53)	67 - 79 (42 - 49)	112 - 126 (70 - 78)	67 - 81 (42 - 50)	27 - 40 (17 - 25)	80 - 94 (50 - 58)	43 - 57 (27 - 35)
4.111	265/75 R15	30 - 44 (19 - 27)	74 - 87 (46 - 54)	116 - 130 (72 - 81)	60 - 72 (37 - 45)	54 - 67 (34 - 42)	107 - 120 (66 - 75)	64 - 78 (40 - 48)	25 - 38 (16 - 24)	76 - 89 (47 - 55)	41 - 55 (25 - 34)

Neutral Start Switch

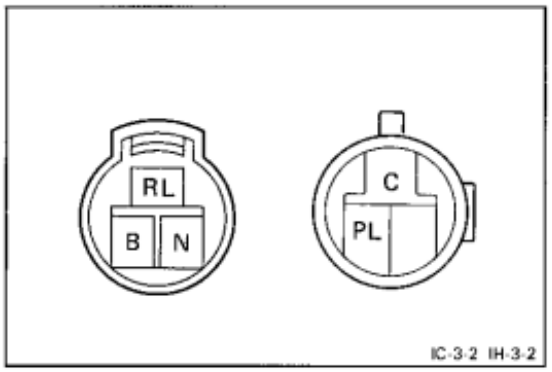

INSPECT NEUTRAL START SWITCH

Using an ohmmeter, check the continuity of the terminals for each switch position shown in the table below.

Terminal / Shift position	C	RL	N	B	PL
P range	○		○	○	○
R range	○	○			
N range			○	○	

If continuity between the terminals is not as specified, replace the switch.

ON-VEHICLE REPAIR

Valve Body

REMOVAL OF VALVE BODY

1. MAKE PLATE TO RETAIN ACCUMULATOR PISTONS

A retainer is helpful for holding accumulator pistons in the case during removal and installation of the valve body.

The plate may be made from aluminum or plastic.

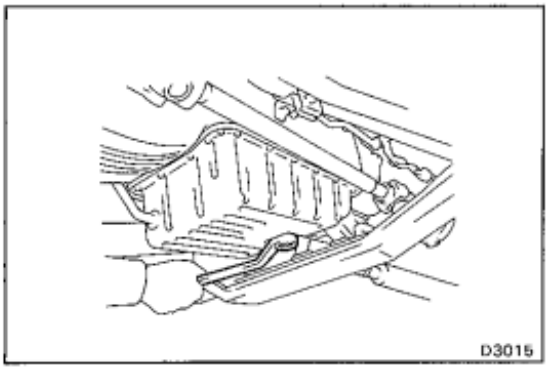

2. REMOVE TRANSMISSION AND TRANSFER UNDER COVERS

3. CLEAN TRANSMISSION EXTERIOR

To help prevent contamination, clean the exterior of the transmission.

4. DRAIN TRANSMISSION FLUID

Remove the drain plug and drain fluid into a suitable container.

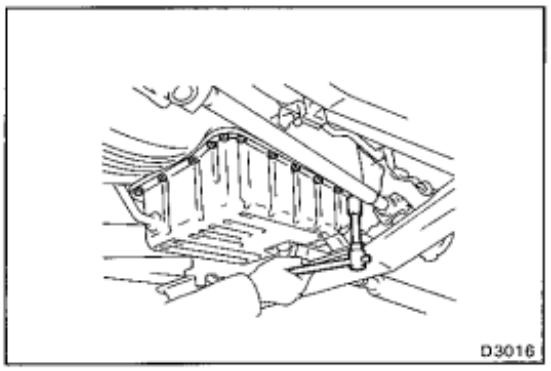

5. REMOVE OIL PAN

NOTICE: Some fluid will remain in the oil pan. Be careful not to damage the filler tube.

(a) Remove twenty bolts.

(b) Insert the blade of SST between the transmission case and oil pan, cut off applied sealer.

SST 09032-00100

NOTICE: Be careful not to damage the oil pan flange.

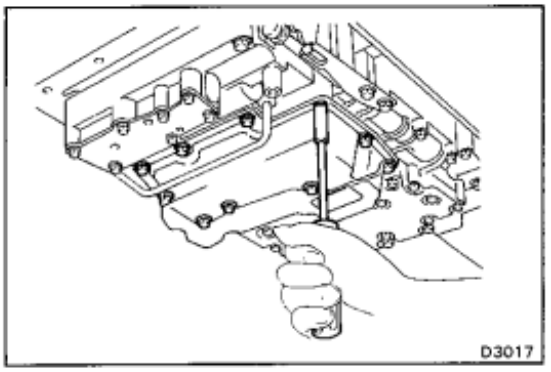

6. REMOVE OIL STRAINER AND GASKET

(a) Remove the ten bolts and oil strainer.

NOTICE: Be careful as some oil will come out with the filter.

(b) Remove the gasket.

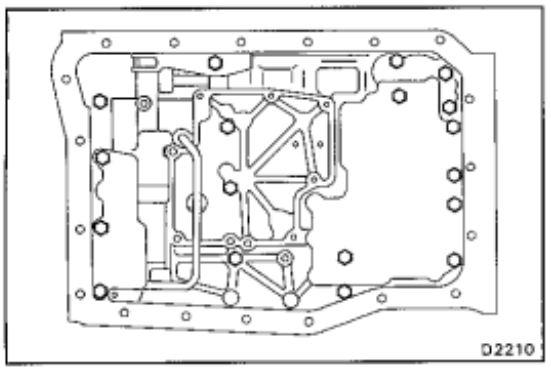

7. REMOVE VALVE BODY

(a) Remove the eighteen bolts.

HINT: Support the valve body by hand to prevent it from falling.

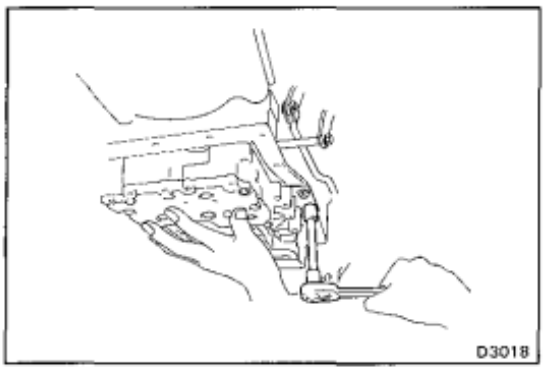

(b) Lower valve body slightly, and install the accumulator piston retaining plate. Hold in place with two pan bolts, and hand tighten.

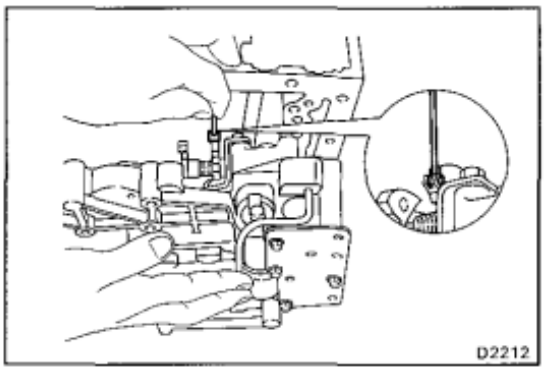

(c) Disconnect the throttle cable from the cam and remove the valve body.

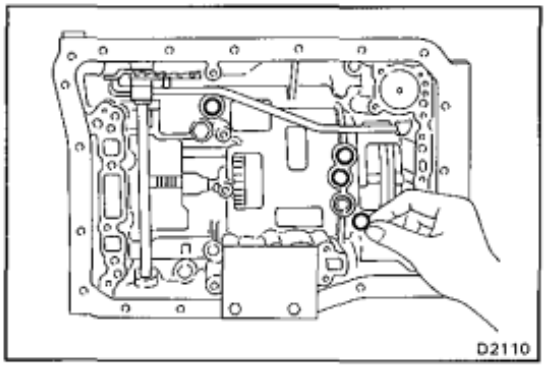

8. REMOVE FOUR CENTER SUPPORT APPLY GASKETS

INSTALLATION OF VALVE BODY

1. INSTALL FOUR CENTER SUPPORT APPLY GASKETS

Install the four center support apply gaskets, facing the pitted sides toward the transmission case.

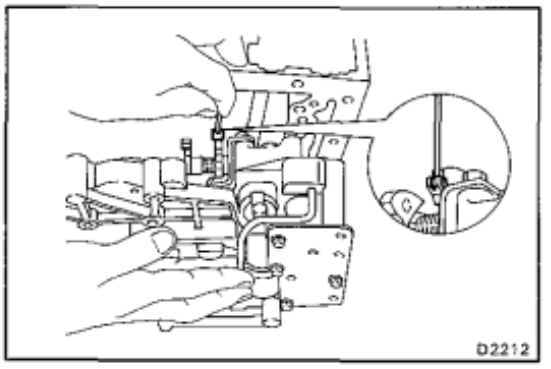

2. CONNECT THROTTLE CABLE TO CAM

Push the cable fitting into the cam.

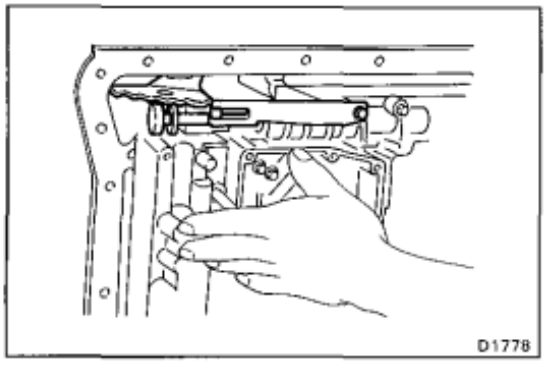

3. INSTALL VALVE BODY

(a) Align the manual valve lever with the manual valve.

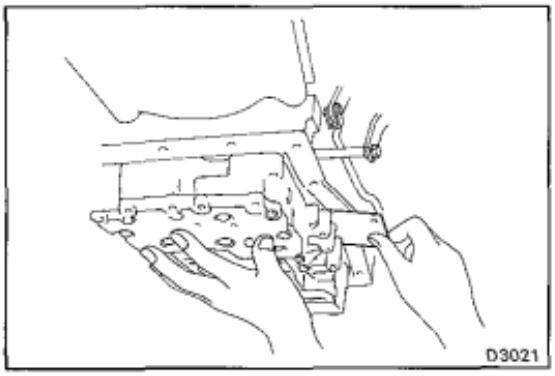

(b) Remove the two pan bolts, and slide out the accumulator retaining plate.

4. INSTALL VALVE BODY BOLTS

(a) Install the three bolts indicated by the arrows.

(b) Install the other bolts.

HINT: Each bolt length is indicated in the figure.

A bolt 22 mm (0.866 in.)
B bolt 32 mm (1.260 in.)
C bolt 36 mm (1.417 in.)
D bolt 41 mm (1.614 in.)
E bolt 45 mm (1.772 in.)
F bolt 57 mm (2.244 in.)
G bolt 64 mm (2.520 in.)

(c) Check that the manual valve lever contacts the center of the roller at the tip of the detent spring.

(d) Tighten the bolts.

Torque: 100 kg-cm (7 ft-lb, 10 N·m)

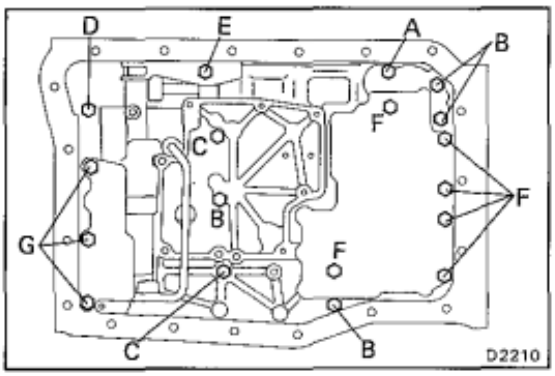

5. INSTALL OIL STRAINER

Be sure the strainer is clean. Install a new gasket and strainer.

HINT: Each bolt length is indicated in the figure.

A bolt 12 mm (0.472 in.)
B bolt 45 mm (1.772 in.)
C bolt 47 mm (1.850 in.)

Torque: 5 mm bolt 55 kg-cm (48 in.-lb, 5.4 N·m)
6 mm bolt 100 kg-cm (7 ft-lb, 10 N·m)

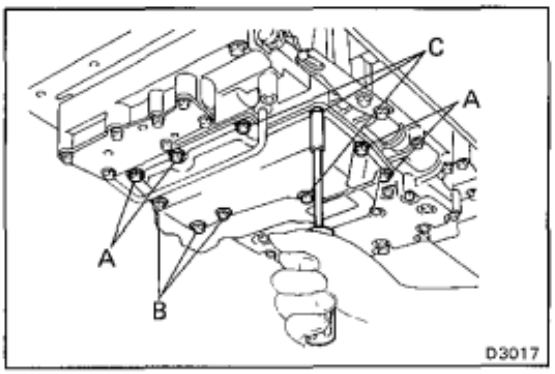

6. INSTALL PAN

(a) Install the two magnets in the oil pan.

(b) Remove any packing material and be careful not to drop oil on the contacting surface of the transmission case and oil pan.

(c) Apply seal packing to the oil pan.

Seal packing: Part No. 08826-00090, THREE BOND 1281 or equivalent

(d) Tighten the bolts evenly.

Torque: 70 kg-cm (61 in.-lb, 6.9 N·m)

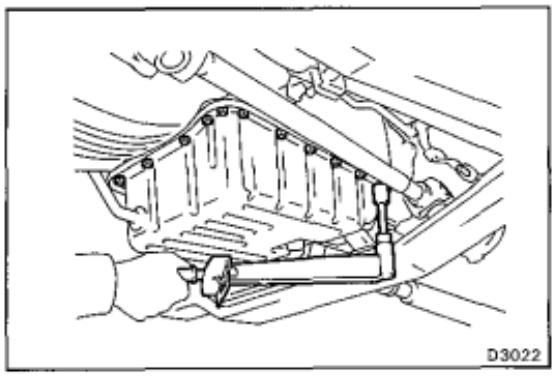

7. INSTALL DRAIN PLUG

(a) Install a new gasket and drain plug.

(b) Torque the drain plug.

Torque: 280 kg-cm (20 ft-lb, 27 N·m)

8. INSTALL TRANSMISSION UNDER COVER AND TRANSFER UNDER COVER

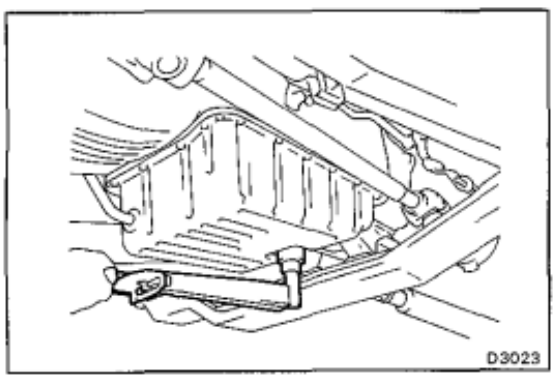

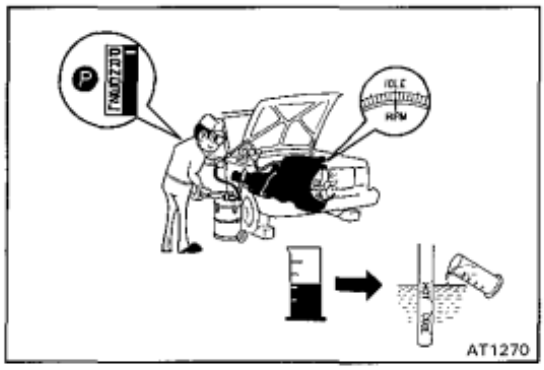

9. **FILL TRANSMISSION WITH ATF**

Add 6.0 liters (6.3 US qts, 5.3 Imp. qts)

NOTICE: Do not overfill.

Fluid type: ATF DEXRON® II

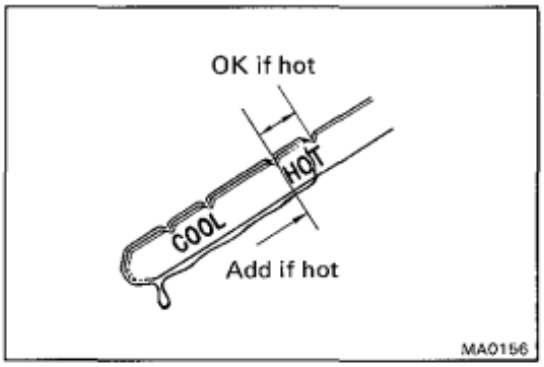

10. **CHECK FLUID LEVEL (See page AT-11)**

Throttle Cable

REMOVAL OF THROTTLE CABLE

1. **DISCONNECT THROTTLE CABLE**
   (a) Disconnect the cable housing from the bracket.
   (b) Disconnect the cable from the throttle linkage.
   (c) Disconnect the cable from the torque converter housing.

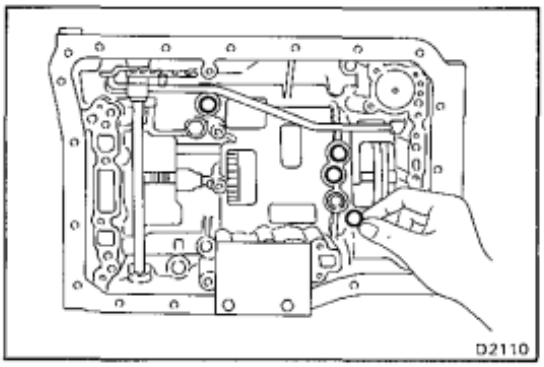

2. **REMOVE VALVE BODY (See page AT-24)**

3. **REMOVE FOUR CENTER SUPPORT APPLY GASKETS**

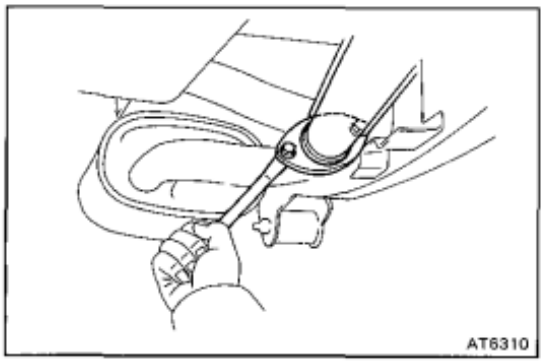

4. **DISCONNECT EXHAUST FRONT PIPE FROM TAIL PIPE**

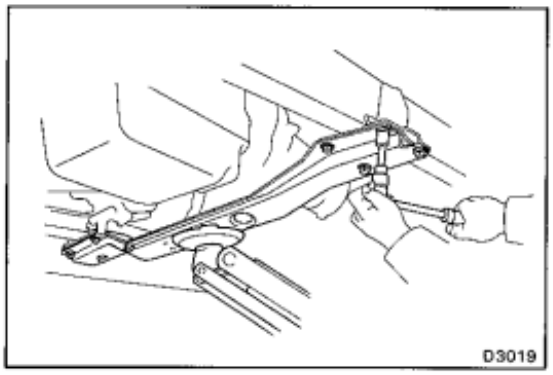

5. REMOVE FRAME CROSSMEMBER SET BOLTS

(a) Support the frame crossmember with jack.

(b) Remove the eight set bolts.

6. REMOVE THROTTLE CABLE CLAMP

(a) Lower the jack.

(b) Remove the cable clamp from the transmission housing.

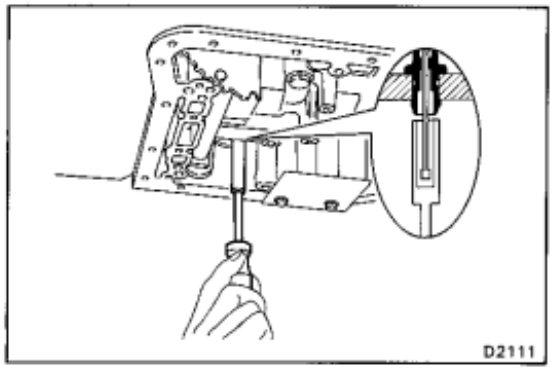

7. PUSH THROTTLE CABLE OUT OF TRANSMISSION CASE

Using 10 mm socket, push the throttle cable out.

INSTALLATION OF THROTTLE CABLE

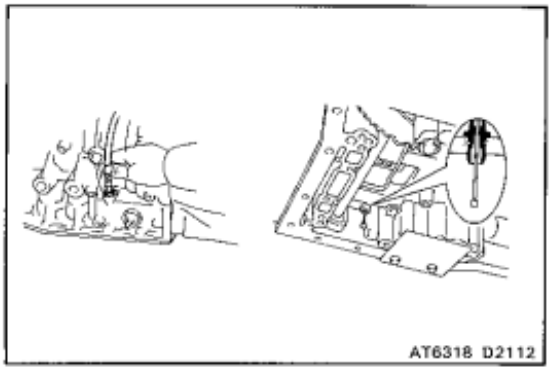

1. INSTALL CABLE IN TRANSMISSION CASE

Be sure to push it in all the way.

2. INSTALL THROTTLE CABLE CLAMP TO TRANSMISSION HOUSING

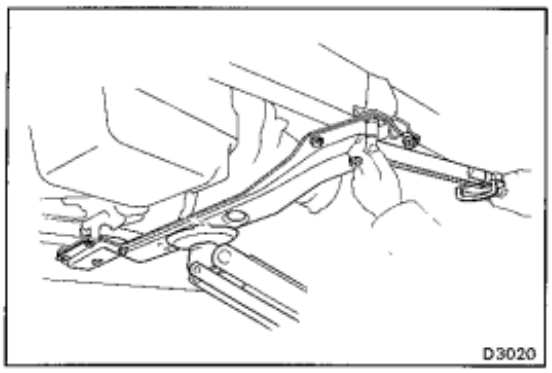

3. INSTALL FRAME CROSSMEMBER SET BOLTS

Torque: 620 kg-cm (45 ft-lb, 61 N·m)

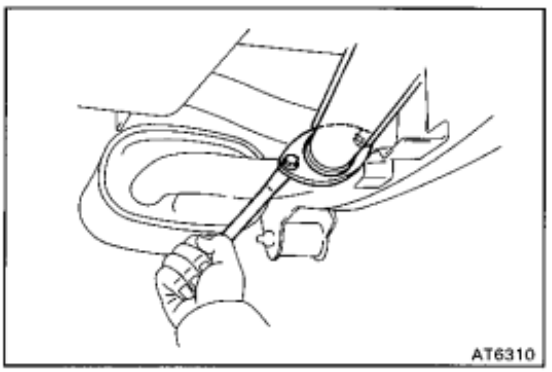

4. CONNECT EXHAUST FRONT PIPE TO TAIL PIPE

(a) Install a new gasket.

(b) Connect the exhaust front pipe to the tail pipe.

Torque: 400 kg-cm (29 ft-lb, 39 N·m)

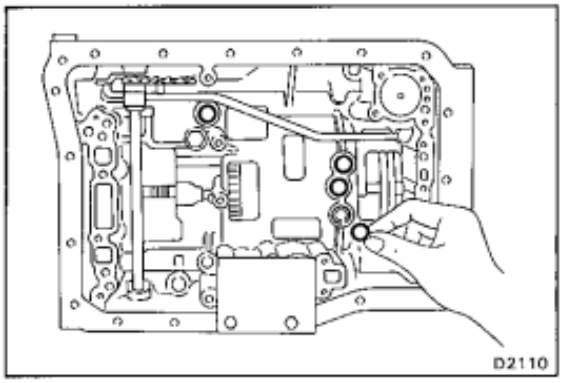

5. **INSTALL FOUR CENTER SUPPORT APPLY GASKETS**

6. **INSTALL VALVE BODY (See page AT-25)**

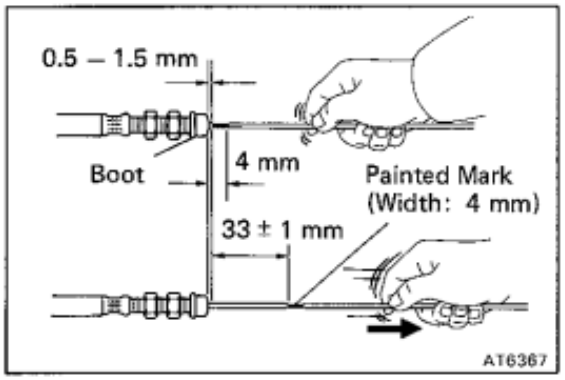

7. **IF THROTTLE CABLE IS NEW, PAINT MARK ON INNER CABLE**

HINT: New cables do not have a cable stopper installed.

Therefore to mark adjustment possible, paint a mark as described below.

(a) Connect the throttle cable to the throttle cam of valve body.

(b) Pull the inner cable lightly until resistance is felt, and hold it.

(c) Paint a mark as shown, about 4 mm (0.16 in.) in width.

(d) Pull the inner cable fully, measure the cable stroke.

Cable stroke: 33 ± 1 mm (1.30 ± 0.04 in.)

8. **CONNECT THROTTLE CABLE**

(a) Connect the cable to the throttle linkage.

(b) Connect the cable housing to the bracket on the valve cover.

9. **ADJUST THROTTLE CABLE (See page AT-12)**

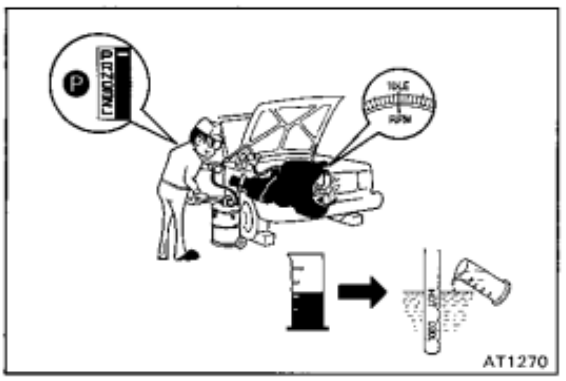

10. **FILL TRANSMISSION WITH ATF**

Add 6 liters (6.3 US qts, 5.3 Imp. qts)

NOTICE: Do not overfill.

Fluid type: ATF DEXRON® II

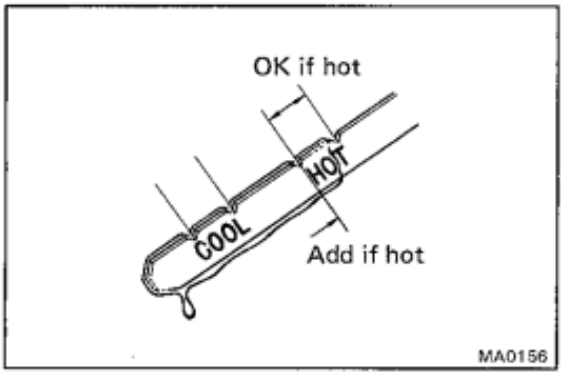

11. **CHECK FLUID LEVEL (See page AT-11)**

REMOVAL AND INSTALLATION OF TRANSMISSION

Remove and install the parts as shown.

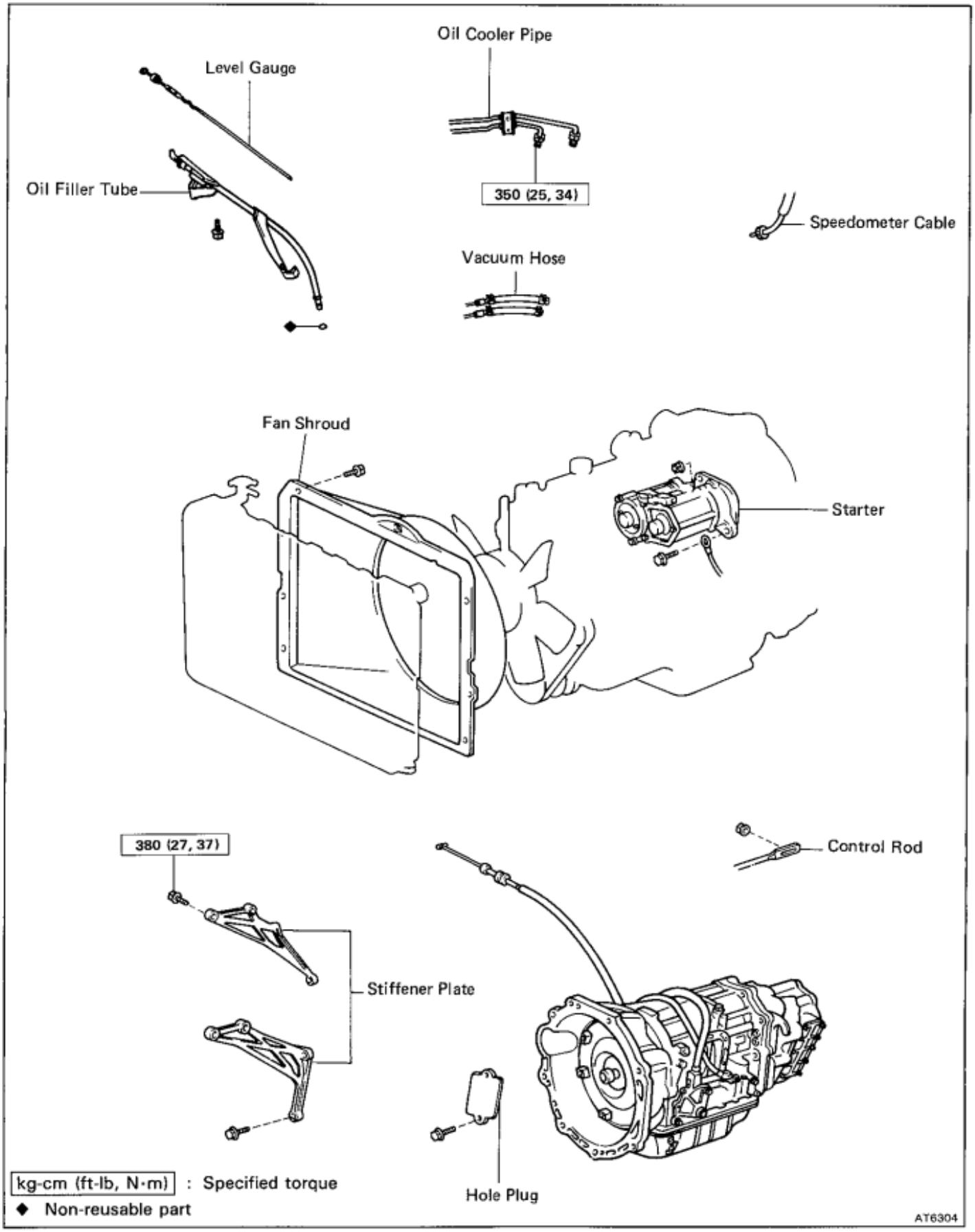

kg-cm (ft-lb, N·m) : Specified torque

◆ Non-reusable part

(Cont'd)

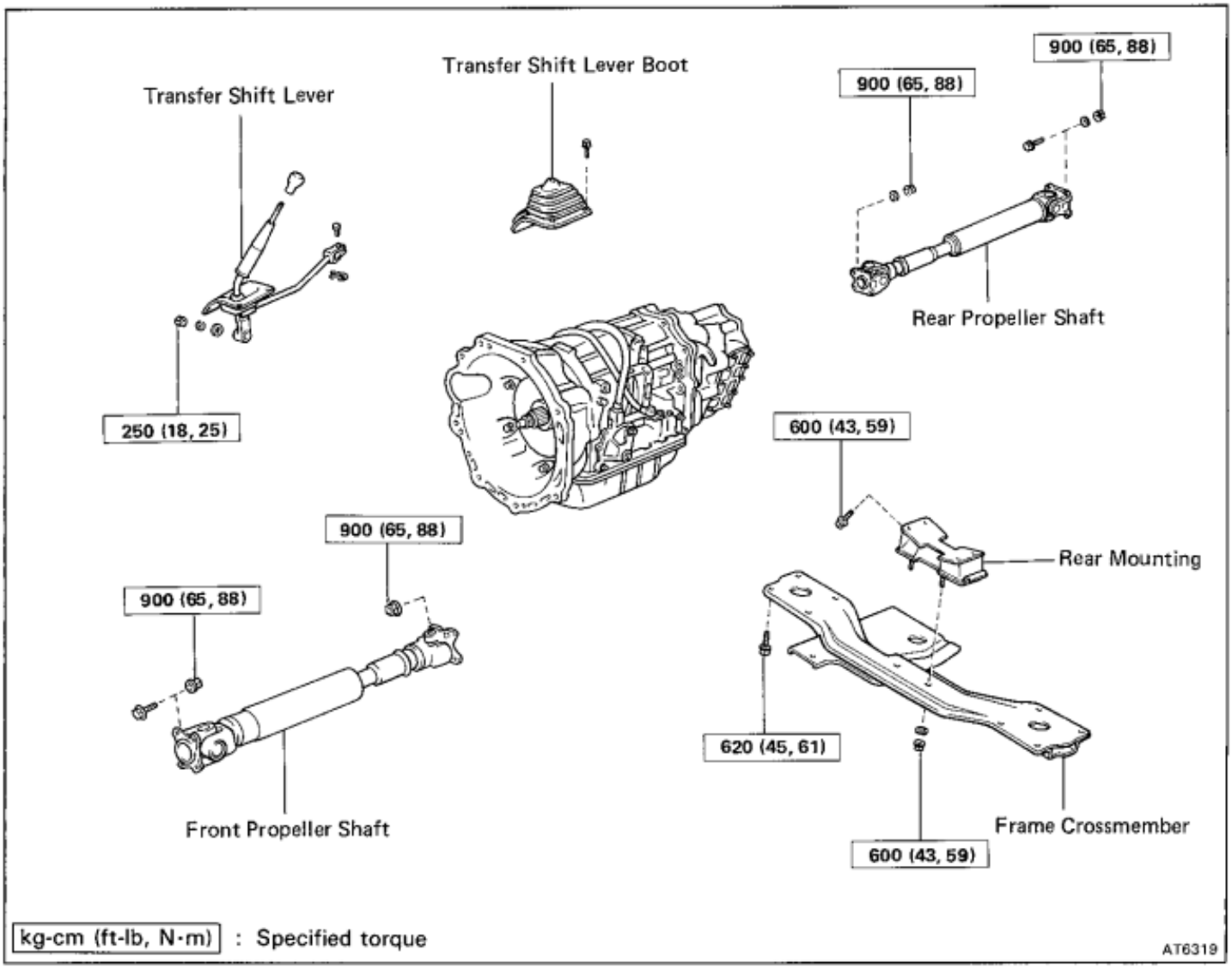

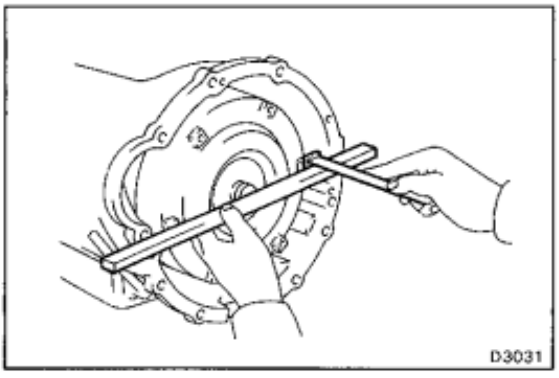

(MAIN POINT OF INSTALLATION)

CHECK TORQUE CONVERTER INSTALLATION

Using calipers and a straight edge, measure from the installed surface of the torque converter to the front surface of the transmission housing.

Correct distance:

3F engine 15.7 mm (0.618 in.) or more
1HZ engine 43.8 mm (1.724 in.) or more

NOTICE: Install the converter horizontally to prevent oil seal from damage.

If the distance is less than the standard, check for an improper installation.

REMOVAL OF TRANSMISSION

1. **DISCONNECT BATTERY CABLE FROM NEGATIVE TERMINAL**

2. **DRAIN COOLANT**

   Open the radiator drain cock and drain coolant into a suitable container.

3. **DISCONNECT UPPER RADIATOR HOSE**

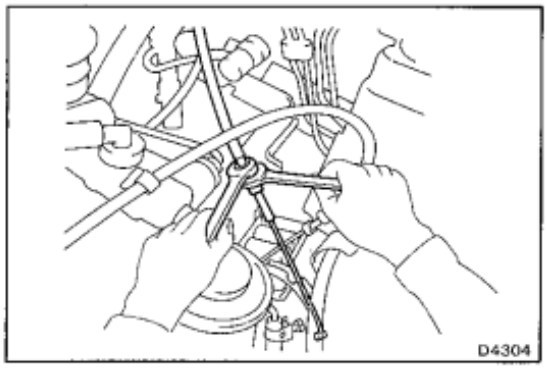

4. **DISCONNECT THROTTLE CABLE**

   (a) Loosen the adjusting nuts, and disconnect the cable housing from the bracket.

   (b) Disconnect the cable from the throttle linkage.

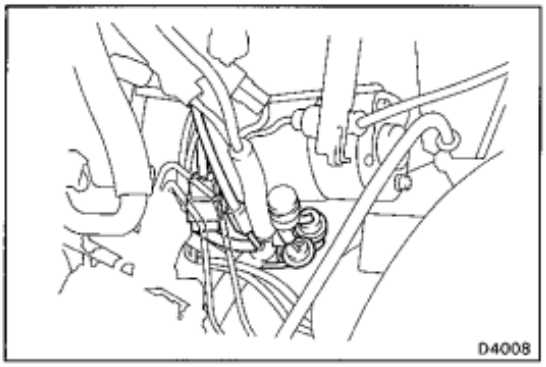

5. **DISCONNECT CONNECTORS**

   Disconnect the connectors located near the starter.

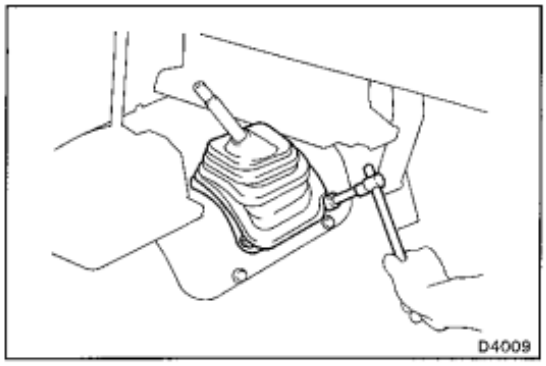

6. **REMOVE TRANSFER SHIFT LEVER BOOT**

   (a) Remove the shift lever knob.

   (b) Remove the four bolts and shift boot.

7. **RAISE VEHICLE AND DRAIN TRANSMISSION**

   NOTICE: Be sure the vehicle is securely supported.

8. **REMOVE TRANSMISSION UNDER COVER AND TRANSFER UNDER COVER**

9. **DRAIN ATF**

   Remove the drain plug and drain ATF into a shift rod from the transfer.

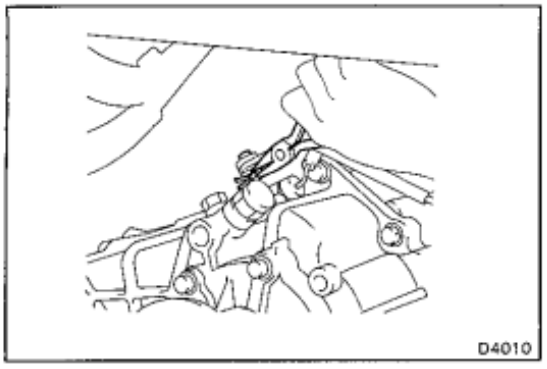

10. **REMOVE TRANSFER SHIFT LEVER**

    (a) Remove the clip and pin, disconnect the shift rod from the transfer.

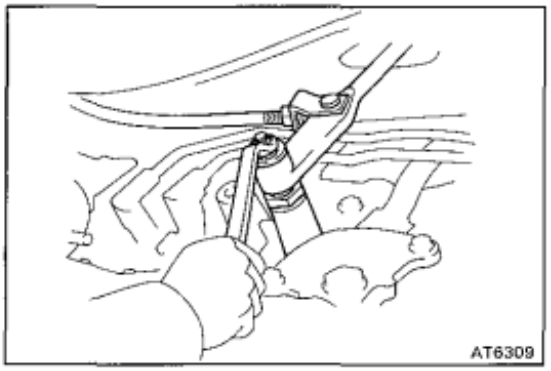

(b) Remove the nut and then remove the washers and the transfer shift lever with control rod.

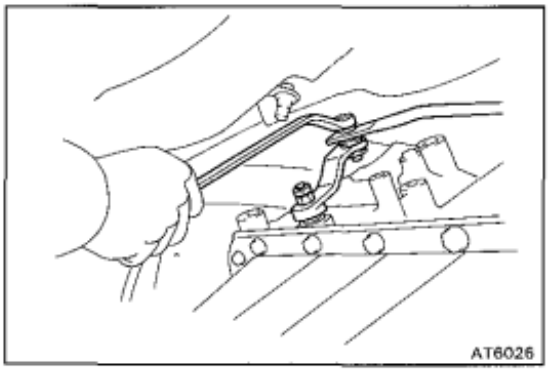

11. DISCONNECT TRANSMISSION CONTROL ROD

Remove the nut and disconnect the control rod from the control shaft lever.

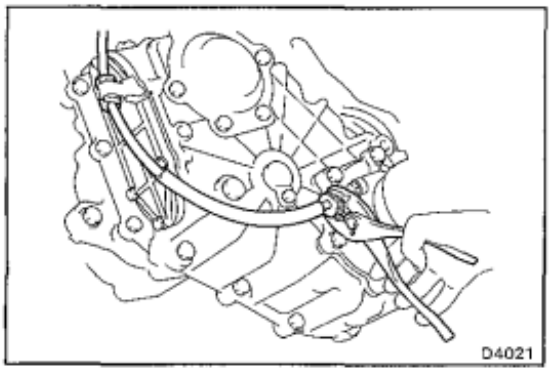

12. REMOVE PROPELLER SHAFT (See page PR-2)

13. DISCONNECT THE SPEEDOMETER CABLE

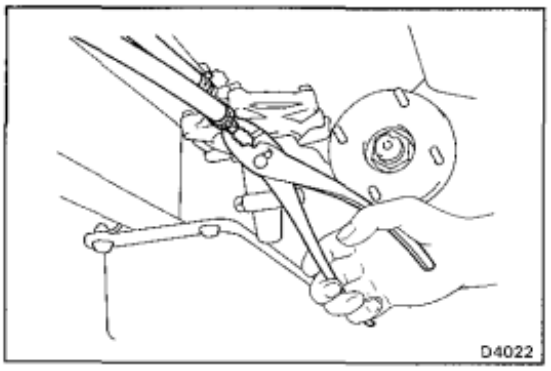

14. DISCONNECT TWO VACUUM HOSES

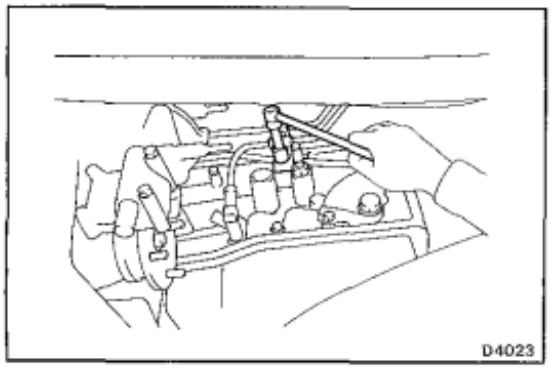

15. DISCONNECT TWO OIL COOLER TUBES

(a) Remove the cooler tub clamps.

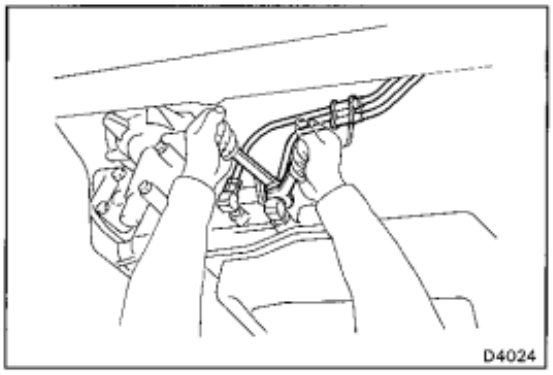

(b) Disconnect the two oil cooler tubes.

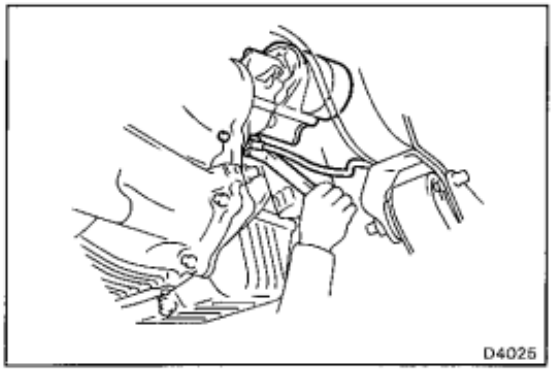

16. REMOVE STARTER

(a) Disconnect the connector and cable.

(b) Remove the bolt, nut and starter.

17. REMOVE OIL FILLER TUBE

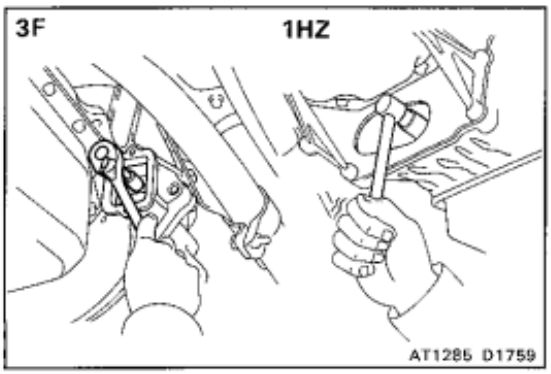

18. REMOVE SIX TORQUE CONVERTER MOUNTING BOLTS

(a) Remove the end plate hole plug.

(b) Turn the crankshaft to gain access to each bolt. Remove the six bolts.

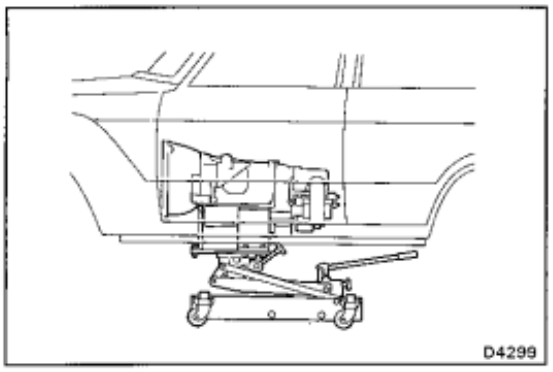

19. REMOVE FRAME CROSSMEMBER

(a) Support the transmission with the transmission jack.

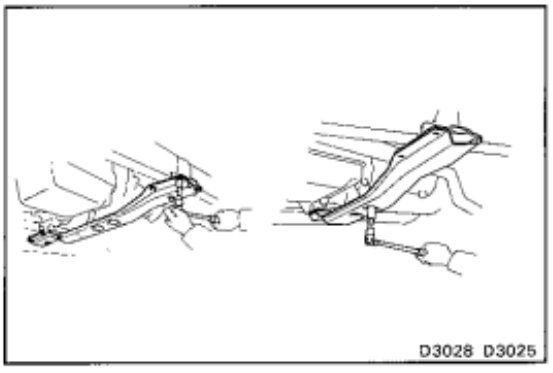

(b) Remove the eight bolts and two nuts, and then remove the frame crossmember.

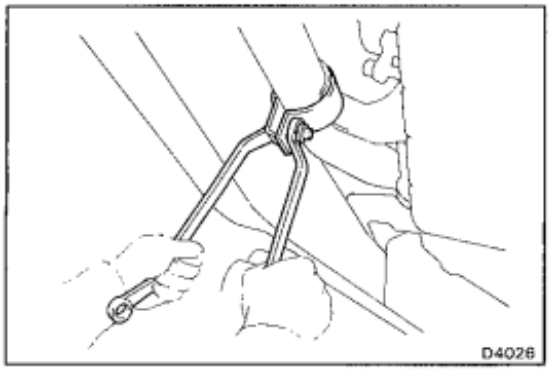

20. DISCONNECT EXHAUST FRONT PIPE

(a) Remove the exhaust pipe clamp.

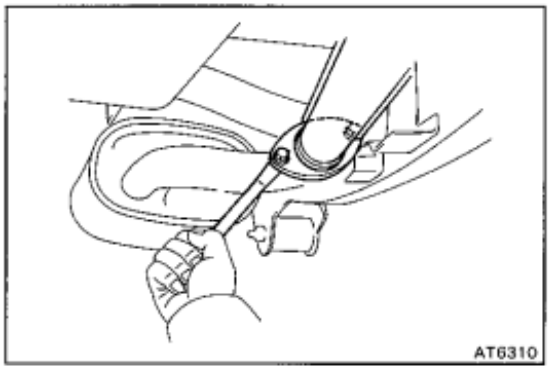

(b) Remove the two bolts and disconnect the front pipe from the tail pipe.

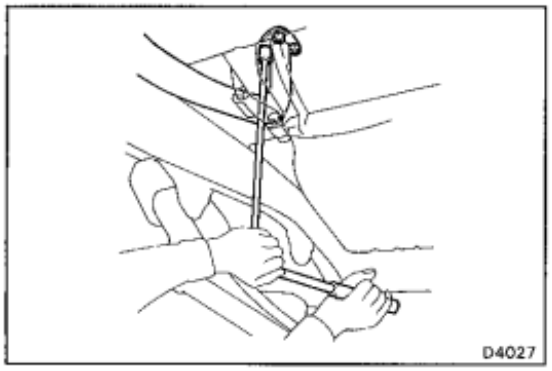

(c) Remove the three nuts and front pipe from the exhaust manifold.

(d) Remove the two gaskets.

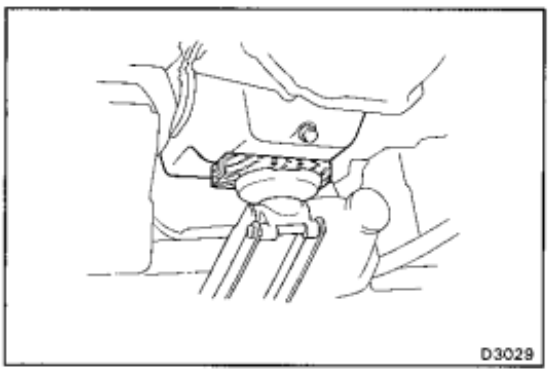

21. REMOVE TRANSMISSION ASSEMBLY

(a) Be sure to put a wooden block between the jack and the engine oil pan to prevent damage. Support the oil pan with a jack.

(b) Lower the rear end of transmission.

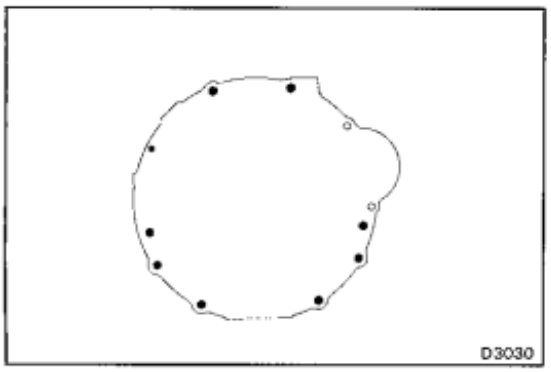

(c) Remove the nine transmission mounting bolts.

(d) Draw out the transmission down and toward the rear.

NOTICE: Be careful not to snag the throttle cable or neutral start switch cable. Keep the oil pan positioned downward.

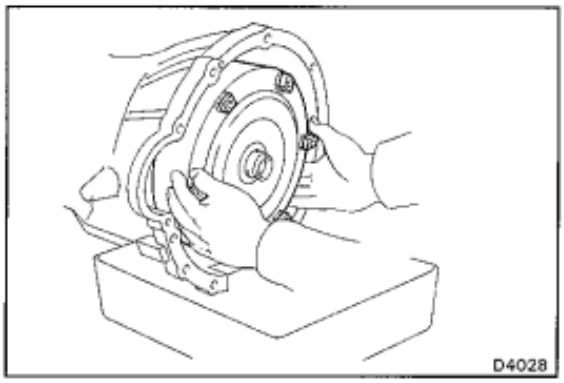

22. PLACE PAN UNDER CONVERTER HOUSING, AND REMOVE CONVERTER

Pull the converter straight off, and allow the fluid to drain into the pan.

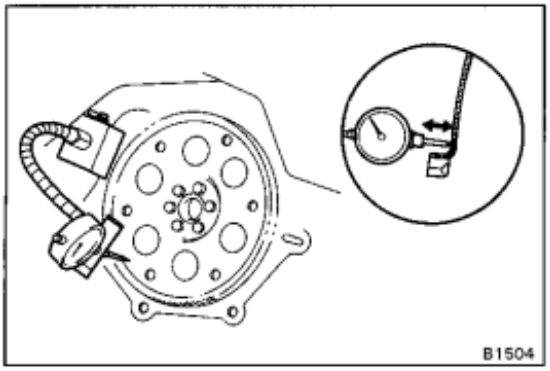

INSTALLATION OF TRANSMISSION

1. MEASURE DRIVE PLATE RUNOUT AND INSPECT RING GEAR

Set up a dial indicator and measure the drive plate runout.

If runout exceeds 0.20 mm (0.0079 in.) or if the ring gear is damaged, replace the drive plate. If installing a new drive plate, note the orientation of spacers and tighten the bolts.

Torque: 3F engine 900 kg-cm (65 ft-lb, 88 N·m)
1HZ engine 1,300 kg-cm (94 ft-lb, 127 N·m)

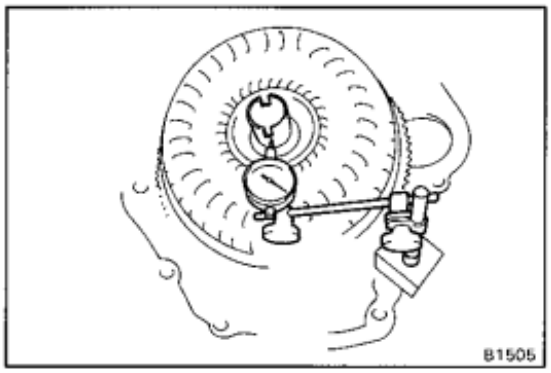

2. MEASURE TORQUE CONVERTER SLEEVE RUNOUT

(a) Temporarily mount the torque converter to the drive plate. Set up a dial indicator.

If runout exceeds 0.30 mm (0.118 in.), try to correctly by reorienting the installation of the converter. If excessive runout cannot be corrected, replace the torque converter.

HINT: Mark the position of the converter to ensure correct installation.

(b) Remove the torque converter.

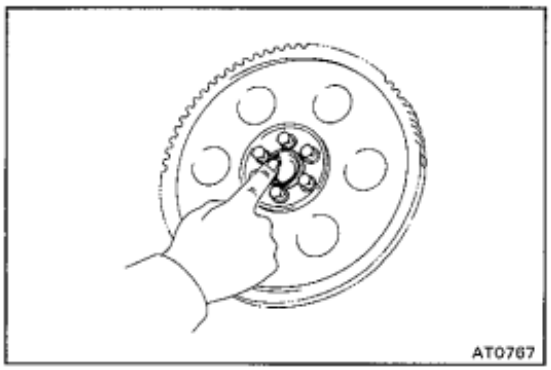

3. APPLY GREASE TO CENTER HUB OF TORQUE CONVERTER AND PILOT HOLE IN CRANKSHAFT

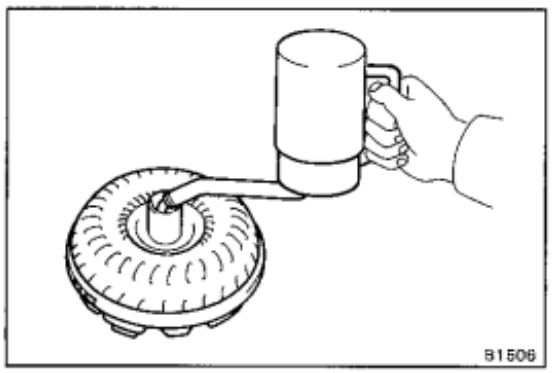

4. INSTALL TORQUE CONVERTER IN TRANSMISSION

If the torque converter has been drained and washed, refill with fresh ATF.

Refill capacity: 2.0 litters (2.1 US qts, 1.8 Imp. qts)

Dry fill capacity: 5.4 litters (5.7 US qts, 4.8 Imp. qts)

Fluid type: ATF DEXRON® II

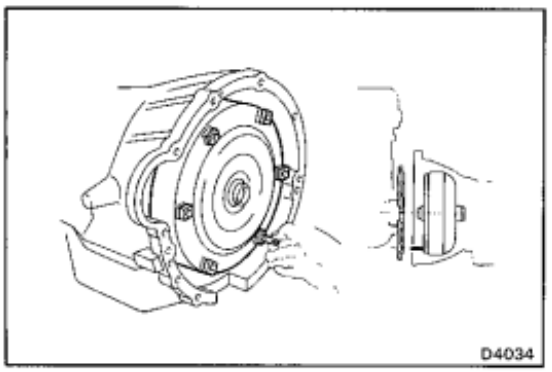

5. INSTALL TRANSMISSION ASSEMBLY

(a) Install the guide pin in the torque converter.

(b) Align the guide pin with one of the drive plate holes.

(c) Align two sleeves on the block with the converter housing.

(d) Temporarily install one bolt.

NOTICE: Be careful not to tilt the transmission forward because the torque converter could slide out.

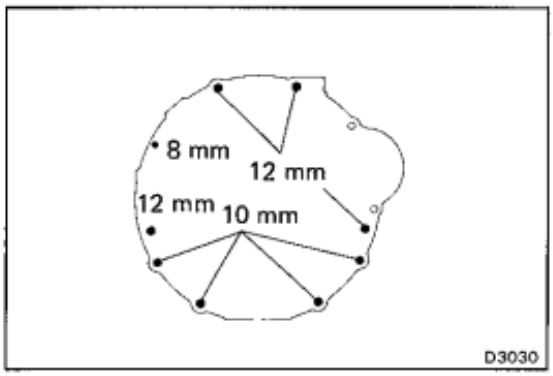

(e) Install the nine transmission mounting bolts.

Torque: 8 mm bolt 185 kg-cm (13 ft-lb, 18 N·m)
10 mm bolt 380 kg-cm (27 ft-lb, 37 N·m)
12 mm bolt 730 kg-cm (53 ft-lb, 72 N·m)

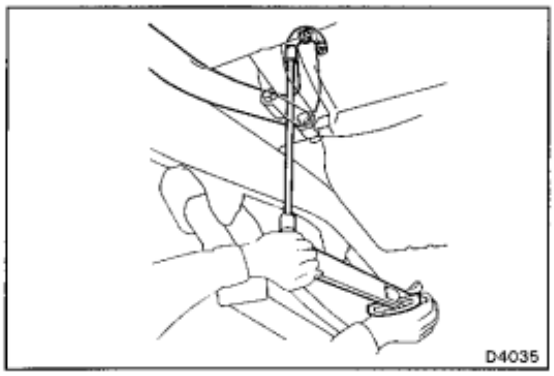

6. INSTALL EXHAUST FRONT PIPE

(a) Install a new gasket and front pipe to the exhaust manifold. Install new nuts and torque them.

Torque: 630 kg-cm (46 ft-lb, 62 N·m)

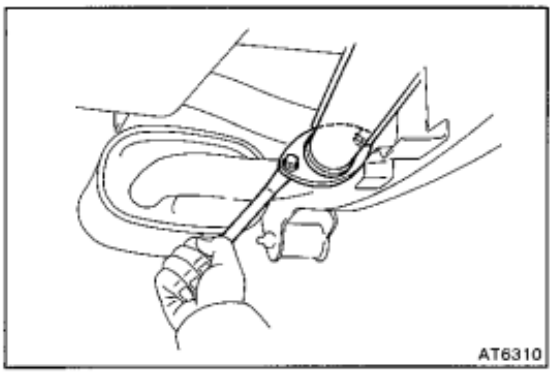

(b) Install a new gasket and connect the front pipe to the tail pipe.

Torque: 400 kg-cm (29 ft-lb, 39 N·m)

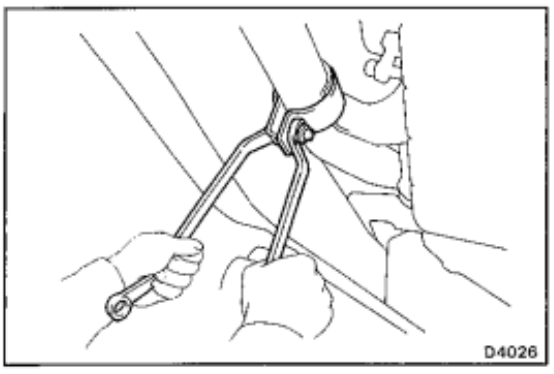

(c) Install the exhaust pipe clamp.

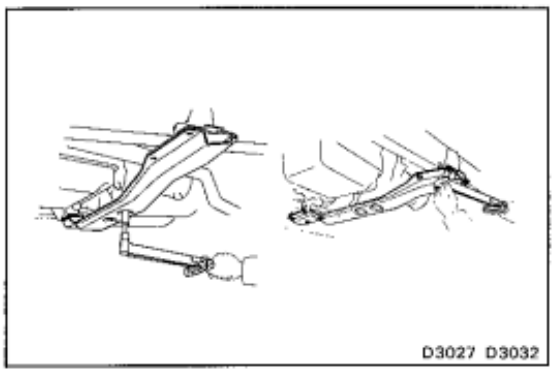

7. INSTALL FRAME CROSSMEMBER

(a) Install the frame crossmember, and torque the eight bolts and two nuts.

Torque: Bolt 620 kg-cm (45 ft-lb, 61 N·m)
Nut 600 kg-cm (43 ft-lb, 59 N·m)

(b) Remove the transmission jack.

(c) Remove the jack from the engine oil pan.

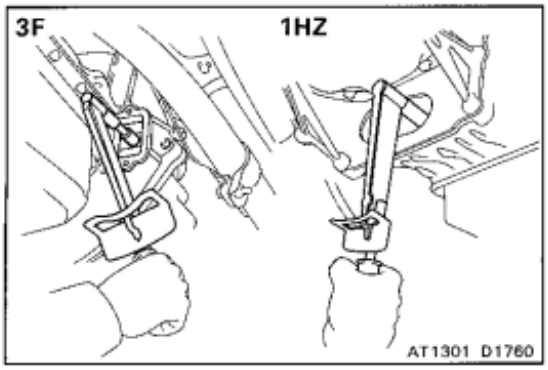

8. INSTALL SIX TORQUE CONVERTER BOLTS

(a) Remove the guide pin.

(b) Install the six bolts hand tight. Turn the crankshaft to gain access.

(c) Tighten the bolts evenly.

Torque: 3F engine 290 kg-cm (21 ft-lb, 28 N·m)
1H engine 550 kg-cm (40 ft-lb, 54 N·m)

(d) Install the end plate hole plug.

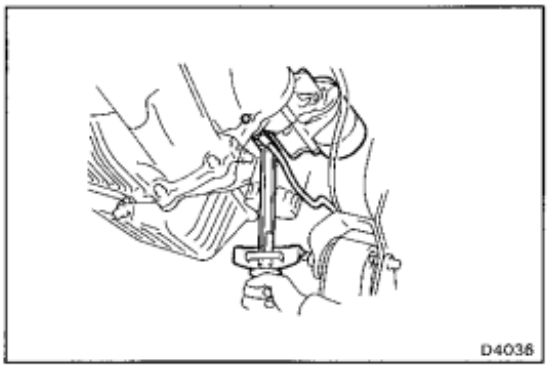

9. INSTALL OIL FILLER TUBE

(a) Install a new O-ring to the filler tube.

(b) Install the filler tube to the transmission.

(c) Install the breather hose.

10. INSTALL STARTER

(a) Install the starter with bolt and nut.

(b) Connect the cable and connector.

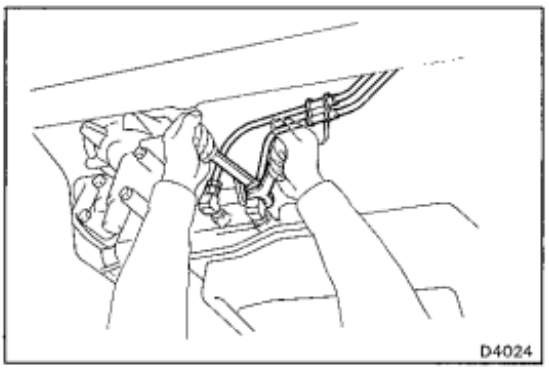

11. CONNECT OIL COOLER TUBES

(a) Connect the cooler tubes by hand.

(b) Torque the union nuts.

Torque: 350 kg-cm (25 ft-lb, 34 N·m)

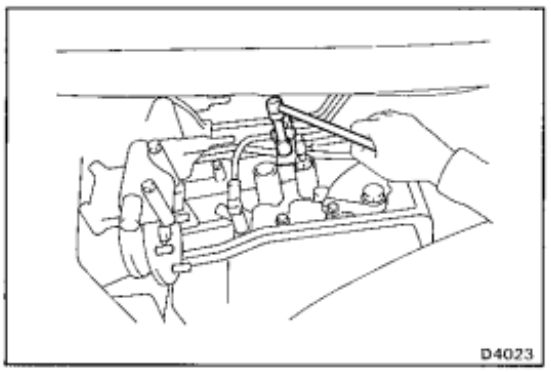

(c) Install the cooler tube clamp

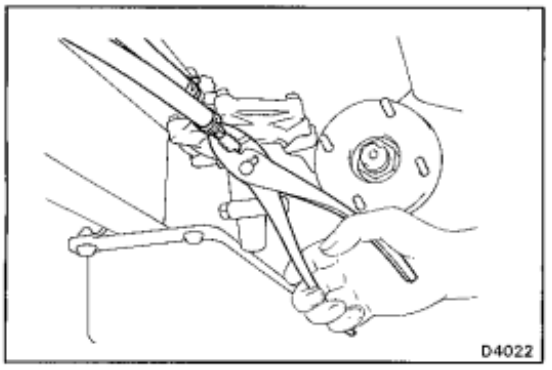

12. CONNECT TWO VACUUM HOSES

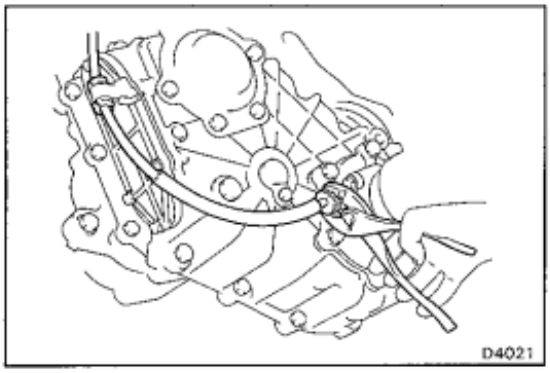

13. **CONNECT SPEEDOMETER CABLE**

14. **INSTALL PROPELLER SHAFTS (See page PR-2)**

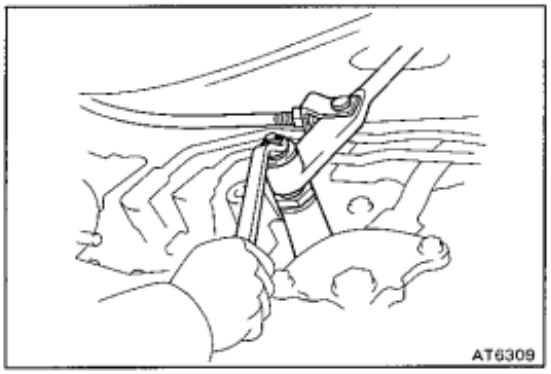

15. **INSTALL TRANSFER SHIFT LEVER**
    (a) Install the washers and shift lever to the transmission.

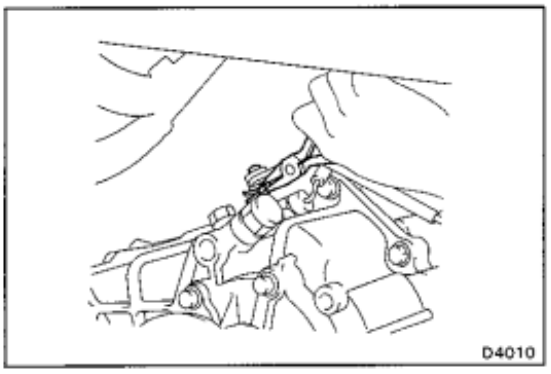

    (b) Install the shift rod and pin to the transfer.
    (c) Install the clip.

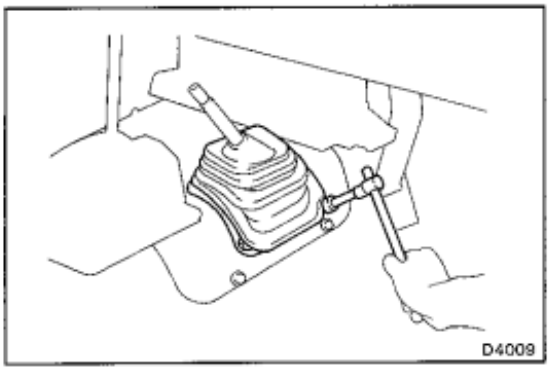

    (d) Install the shift lever boot with the four bolts.
    (e) Install the shift lever knob.

16. **INSTALL TRANSMISSION UNDER COVER AND TRANSFER UNDER COVER**

17. **LOWER VEHICLE AND CONNECT UPPER RADIATOR HOSE**

18. **FILL COOLANT**

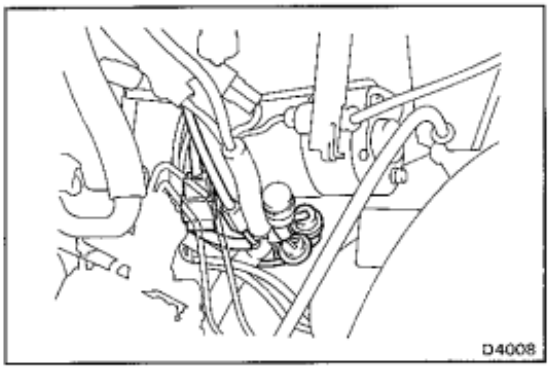

19. **CONNECT CONNECTORS**

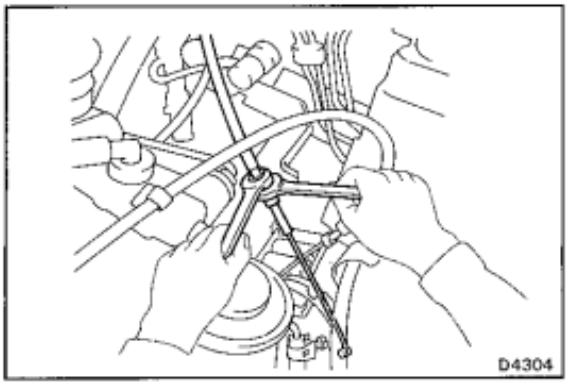

20. CONNECT THROTTLE CABLE

(a) Connect the cable to the throttle linkage.

(b) Connect the cable housing to the bracket.

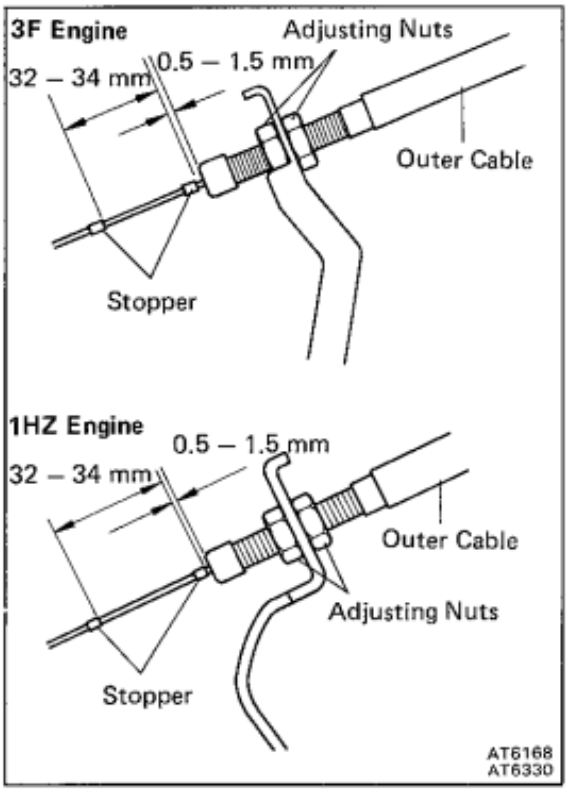

21. ADJUST THROTTLE CABLE
(See page AT-12)

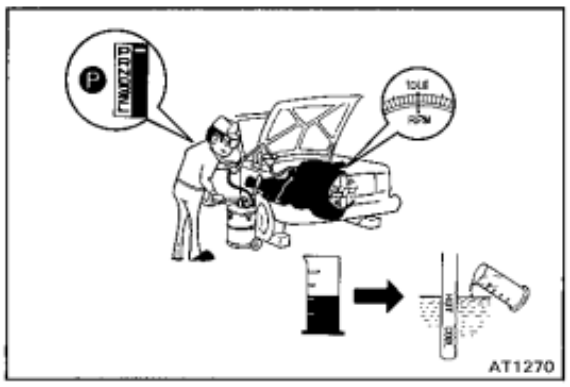

22. CONNECT BATTERY CABLE TO NEGATIVE TERMINAL

23. FILL TRANSMISSION WITH ATF AND CHECK FLUID LEVEL
(See page AT-11)

Fluid type: ATF DEXRON® II

Total capacity: 15.0 litters (15.9 US qts, 13.2 Imp. qts)

Drain and refill capacity:
6.0 liters (6.3 US qts, 5.3 Imp. qts)

24. REFORM ROAD TEST

Check for abnormal noise, shock slippage, correct shift points a smooth operation.

DISASSEMBLY OF TRANSMISSION (A440F)

COMPONENTS

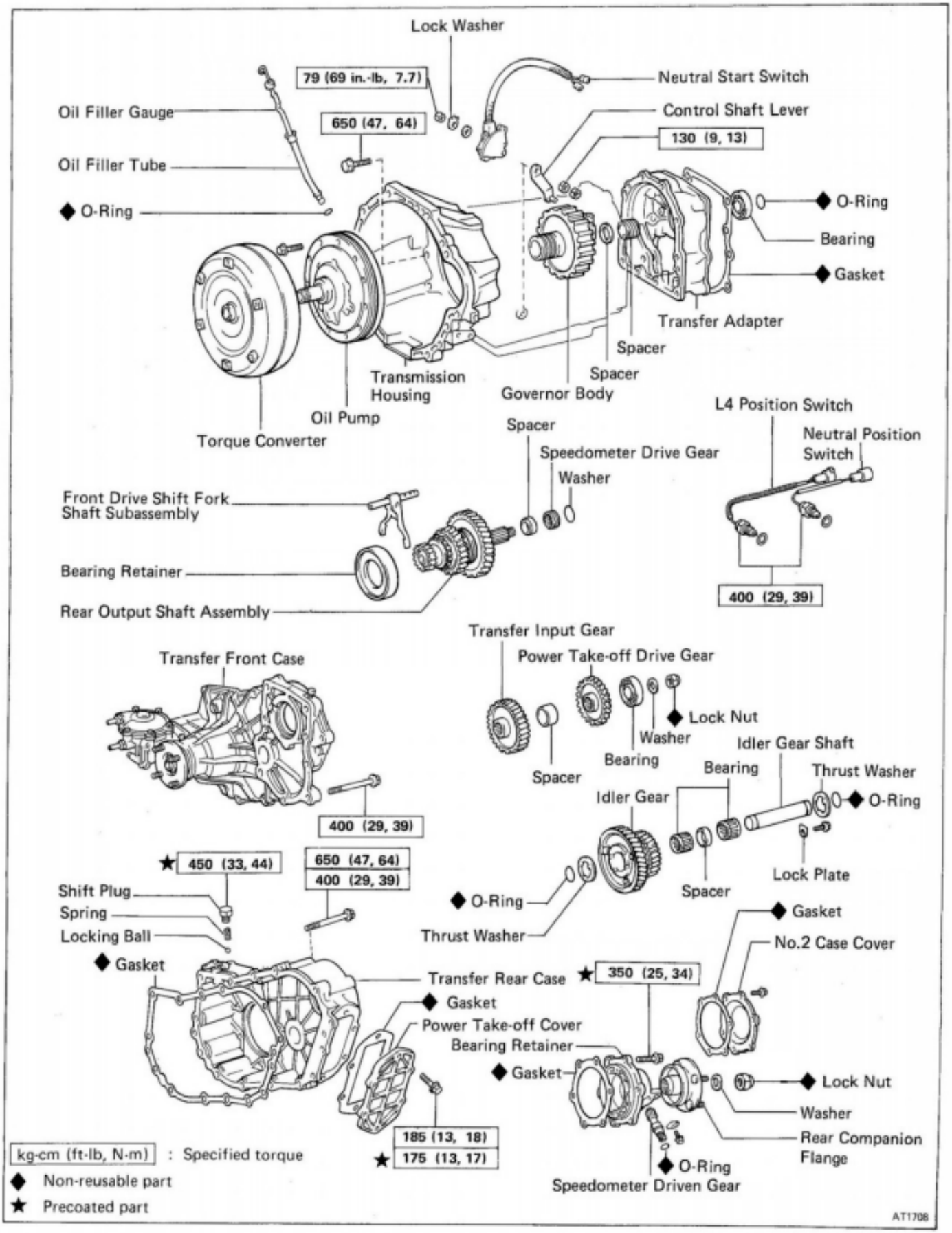

COMPONENTS (Cont'd)

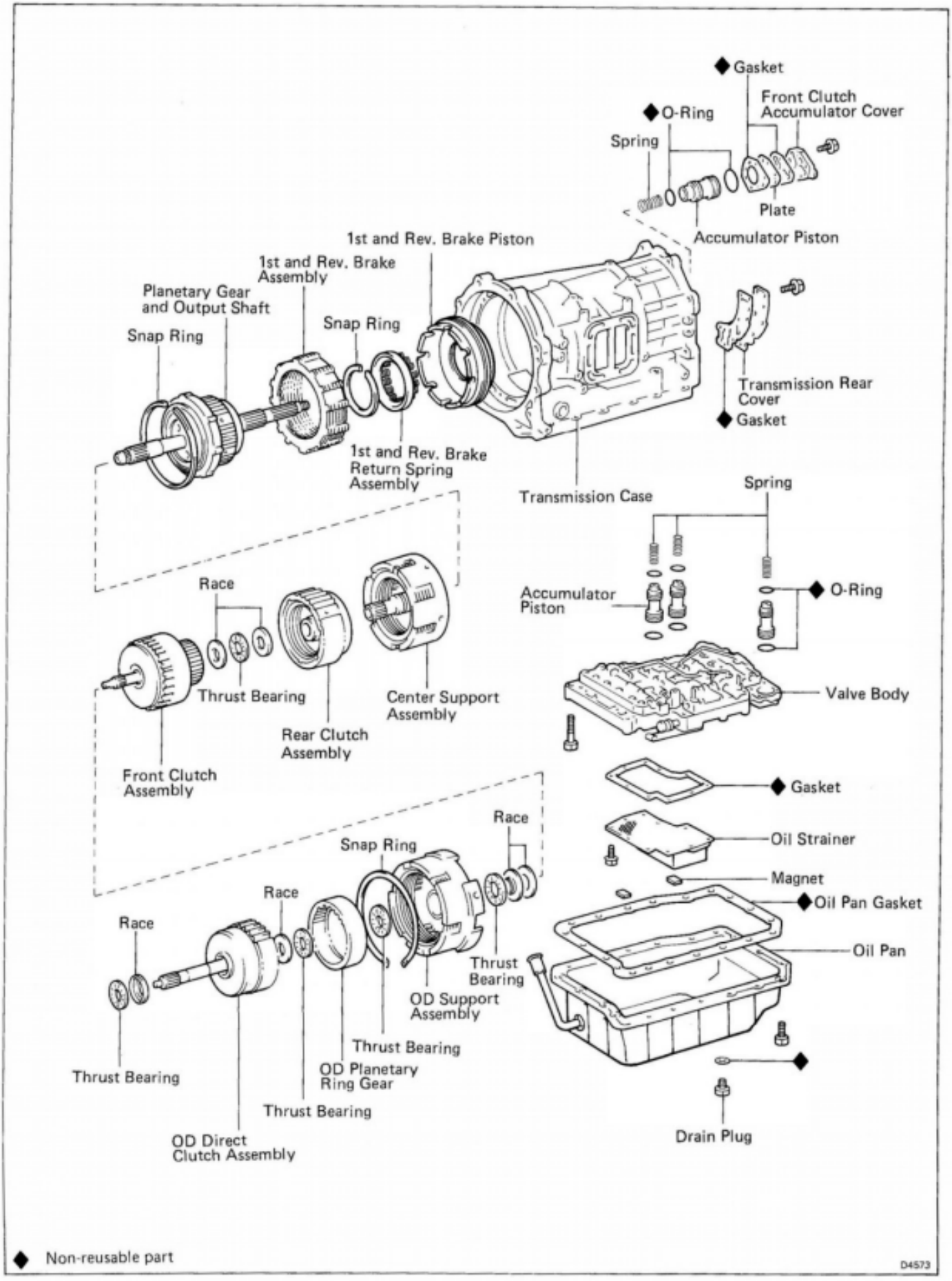

◆ Non-reusable part

D4573

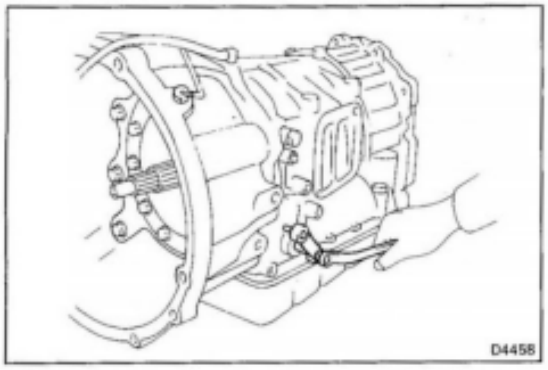

SEPARATE BASIC SUBASSEMBLY

1. REMOVE TORQUE CONVERTER
2. REMOVE OIL FILLER GAUGE AND TUBE
3. REMOVE CONTROL SHAFT LEVER

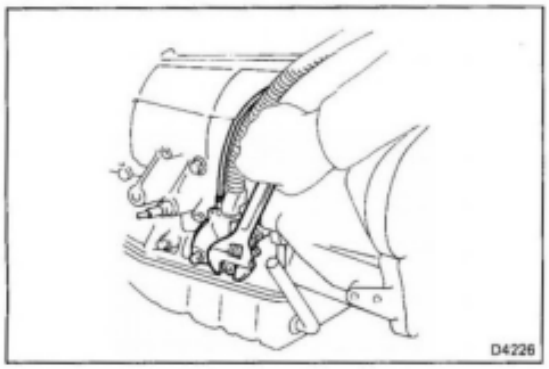

4. REMOVE NEUTRAL START SWITCH
   (a) Loosen the lock washer claw and remove the nut.

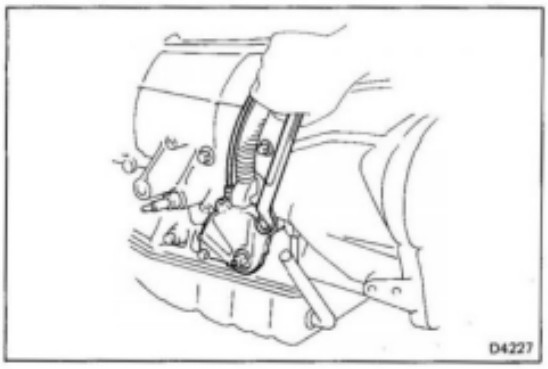

   (b) Remove the lock washer and grommet.
   (c) Remove the two bolts and neutral start switch.

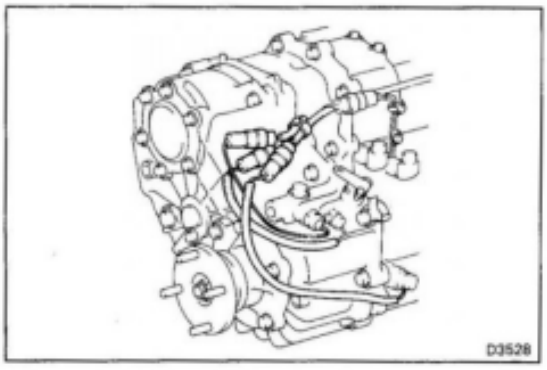

5. REMOVE TRANSFER NEUTRAL SWITCH AND TRANSFER L4 POSITION SWITCH
   (a) Disconnect the three connectors.

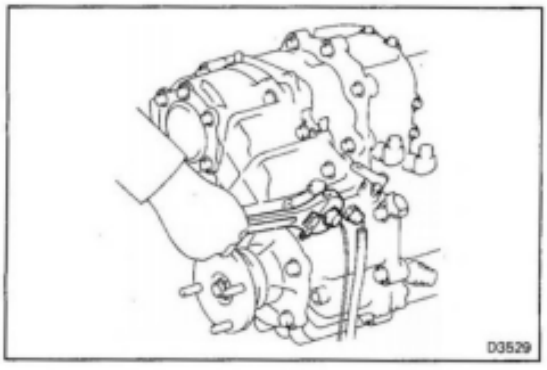

   (b) Remove the transfer neutral position switch.
   (c) Remove the transfer L4 position switch.

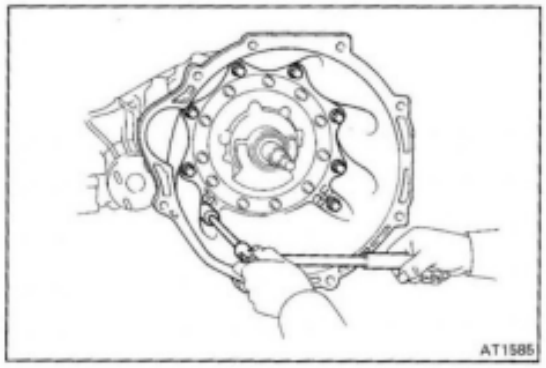

6. REMOVE TRANSMISSION HOUSING

(a) Remove the throttle cable retaining plate.

(b) Remove the eight bolts and transmission housing.

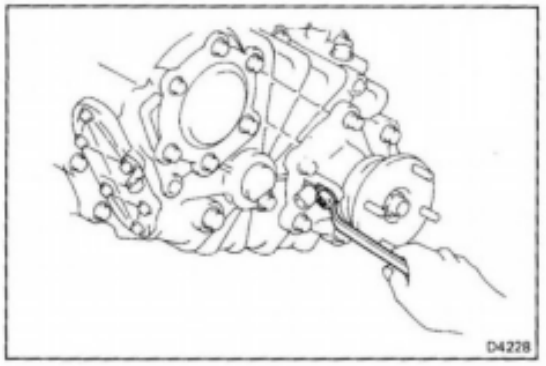

7. REMOVE SPEEDOMETER DRIVEN GEAR

(a) Remove the lock plate.

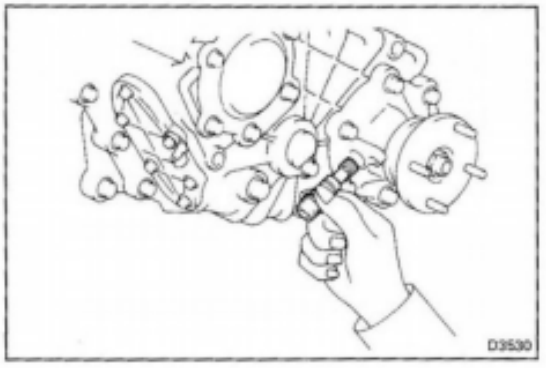

(b) Remove the speedometer driven gear.

(c) Remove the O-ring from the speedometer driven gear.

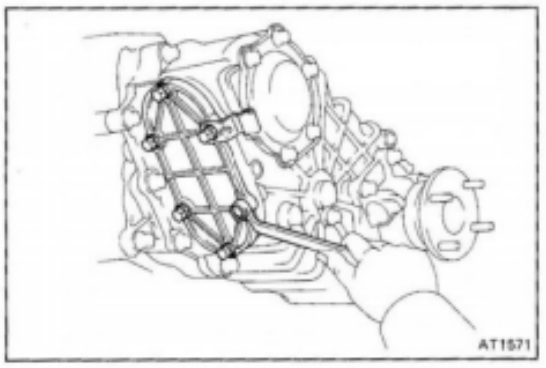

8. REMOVE POWER TAKE-OFF COVER

Remove the six bolts, and remove the power take-off cover and gasket.

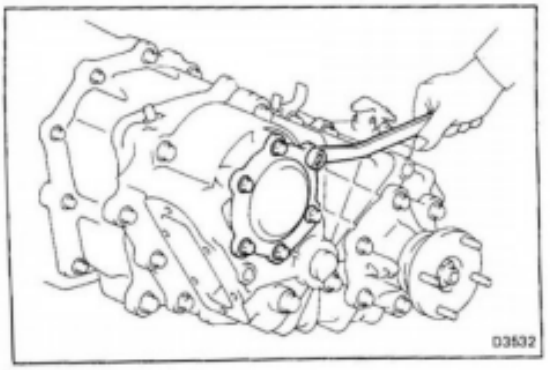

9. REMOVE TRANSFER NO. 2 CASE COVER

Remove the six bolts and remove the transfer No. 2 case cover and gasket.

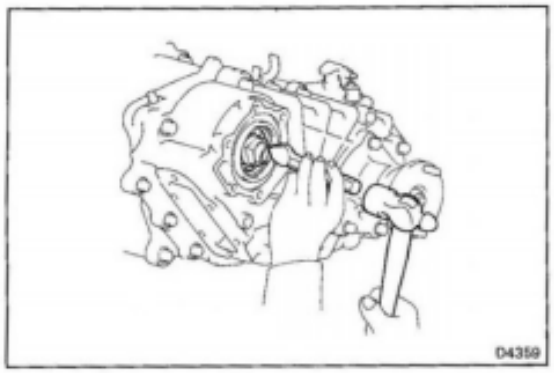

10. REMOVE TRANSMISSION OUTPUT SHAFT LOCK NUT

(a) Using a hammer and chisel, loosen the stacked part of the nut.

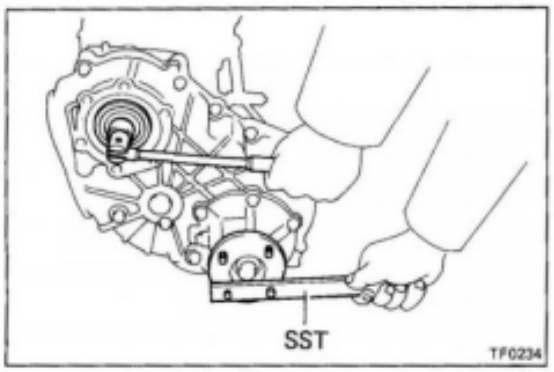

(b) Using SST to hold the rear companion flange, remove the transmission output shaft lock nut and washer.

SST 09330-00021

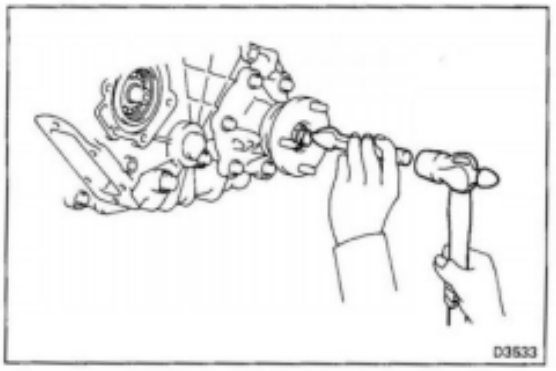

11. REMOVE REAR COMPANION FLANGE

(a) Using a hammer and chisel, loosen the stacked part of the nut.

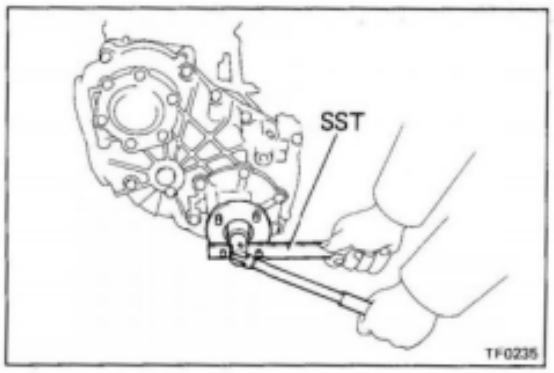

(b) Using SST to hold the rear companion flange, remove the companion flange lock nut and washer.

SST 09330-00021

(c) Remove the rear companion flange.

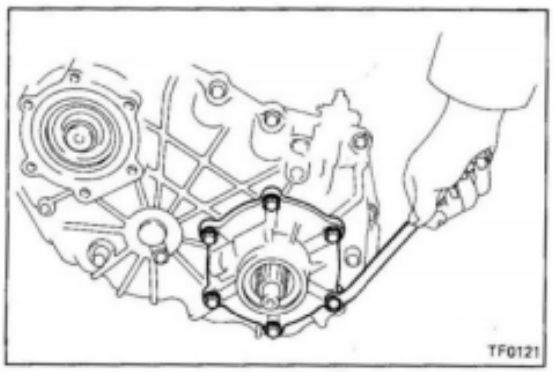

12. REMOVE REAR OUTPUT SHAFT BEARING RETAINER

Remove the six bolts and remove the rear output shaft bearing retainer and gasket.

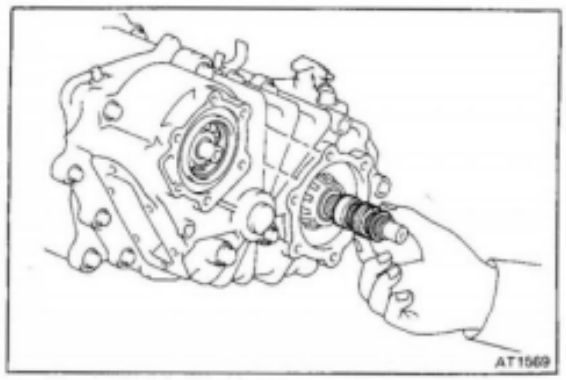

13. REMOVE WASHER, SPEEDOMETER DRIVE GEAR AND SPACER

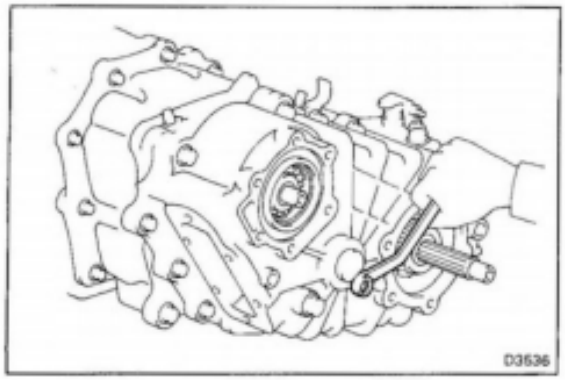

14. REMOVE IDLER GEAR SHAFT LOCK PLATE

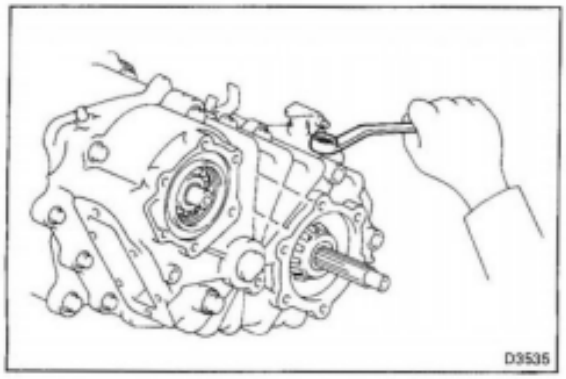

15. REMOVE SHIFT PLUG

Remove the shift plug and using a magnetic finger, remove the spring and locking ball.

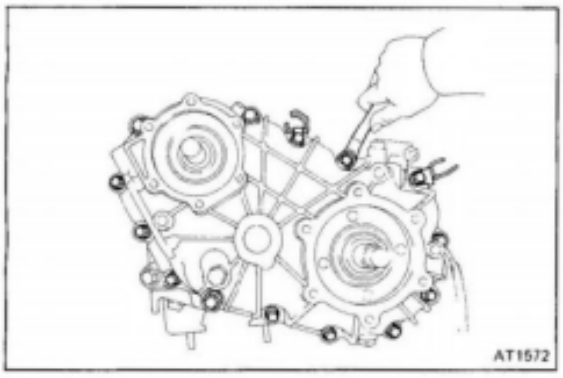

16. REMOVE TRANSFER REAR CASE

(a) Remove the fourteen bolts.

(b) Using a plastic hammer, remove the transfer rear case.

(c) Remove the gasket from the transfer front case.

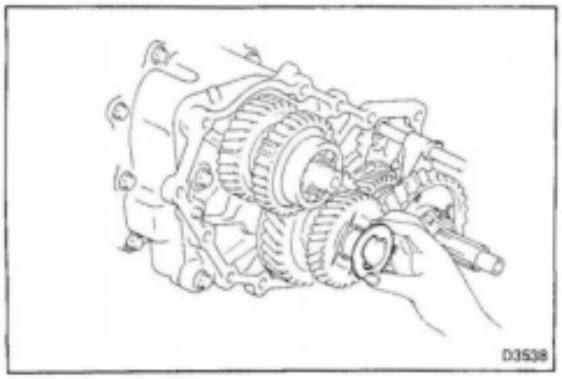

(d) Remove the thrust washer from idler gear shaft.

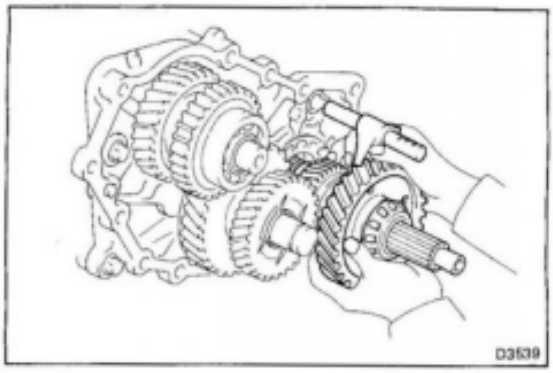

17. REMOVE REAR OUTPUT SHAFT ASSEMBLY WITH FRONT DRIVE SHIFT FORK SHAFT SUBASSEMBLY

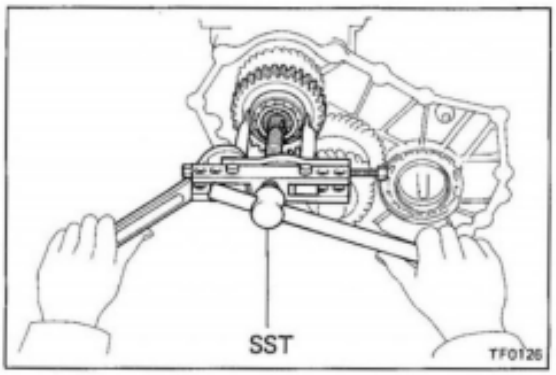

18. REMOVE POWER TAKE-OFF DRIVE GEAR

(a) Using SST, remove the transfer input gear bearing.

SST 09950-20016

(b) Remove the power take-off gear.

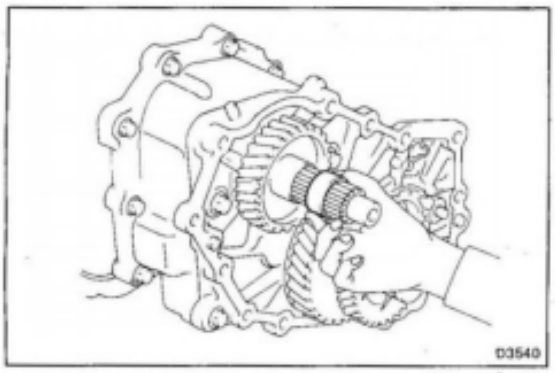

(c) Remove the spacer.

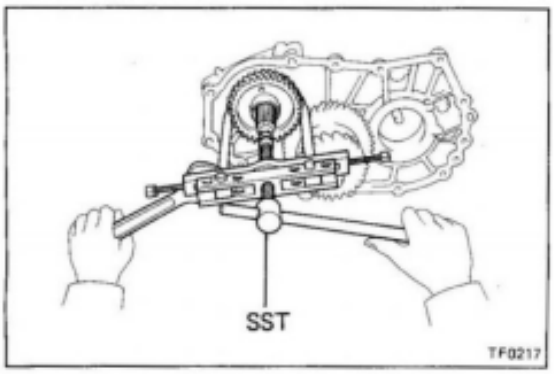

19. REMOVE TRANSFER INPUT GEAR

(a) Using SST, remove the transfer input gear.

SST 09950-20016

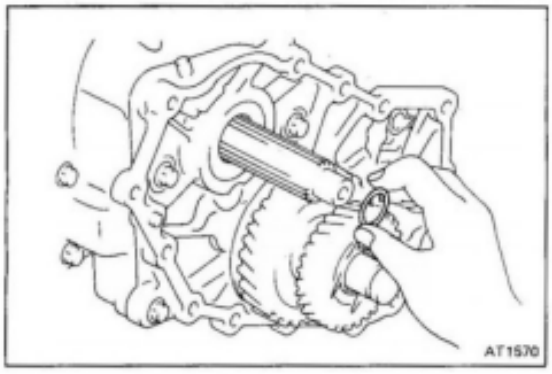

(b) Remove the O-ring from transmission output shaft.

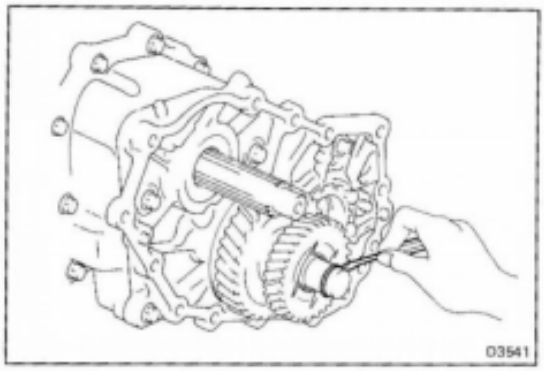

20. **REMOVE IDLER GEAR, BEARING, SPACER AND IDLER GEAR SHAFT**

(a) Remove the O-ring from the idler gear shaft.

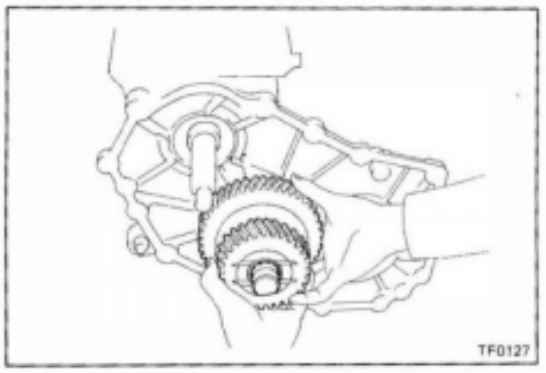

(b) Remove the idler gear with the two bearings and spacer.

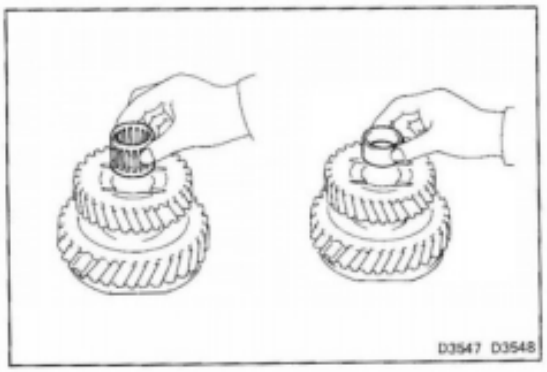

(c) Remove the two bearings and spacer from the idler gear.

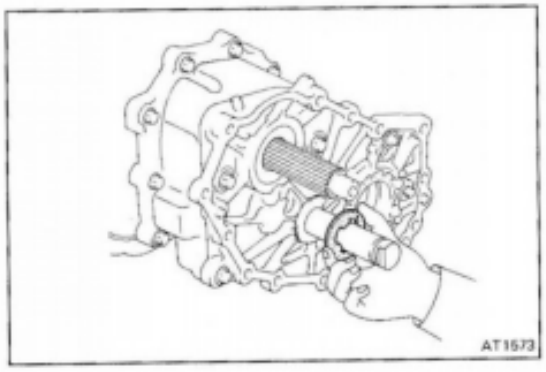

(d) Remove the thrust washer from idler gear shaft.

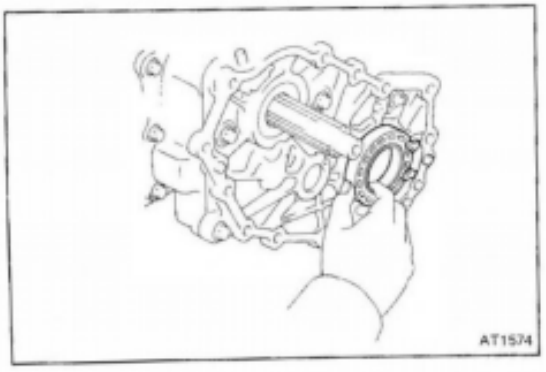

21. **REMOVE REAR OUTPUT SHAFT FRONT BEARING RETAINER**

Remove the rear output shaft front bearing retainer from the transfer front case.

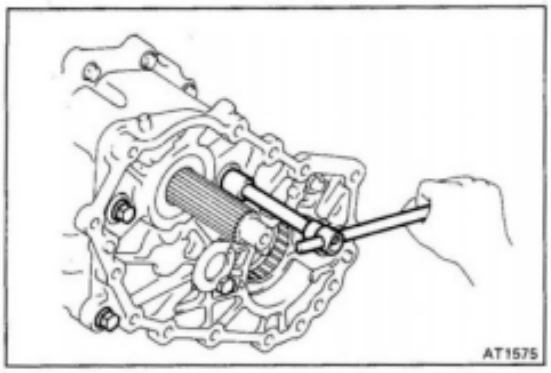

22. REMOVE TRANSFER FRONT CASE

(a) Remove the four bolts and using a plastic hammer, remove the transfer front case.

(b) Remove the gasket and spacer.

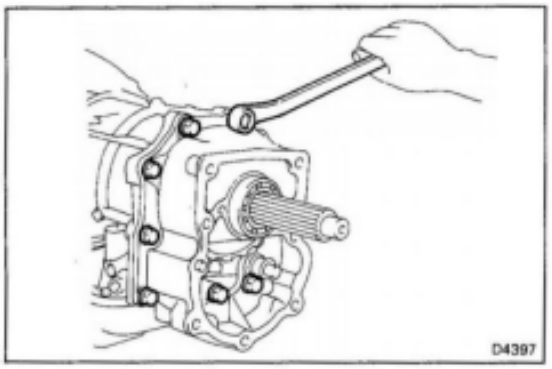

23. REMOVE TRANSMISSION REAR BEARING

(a) Remove the ten transfer adapter installation bolts.

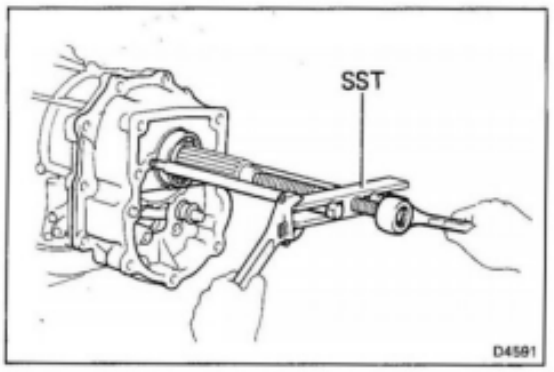

(b) Using SST, remove the transfer adapter with transmission rear bearing.

SST 09350-36010 (09350-06140)

(c) Remove the gasket.

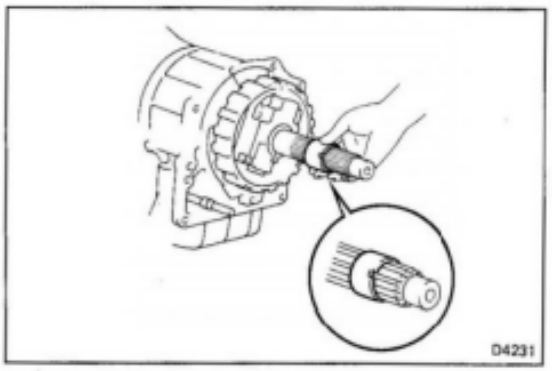

24. REMOVE GOVERNOR BODY

(a) Remove the spacer from the transmission output shaft.

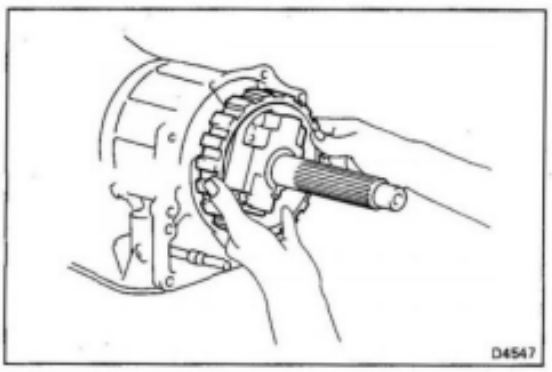

(b) Remove the governor body.

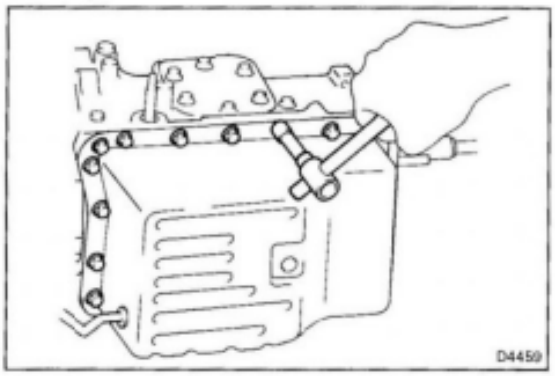

25. REMOVE OIL PAN

(a) Position the oil pan so it does not tilt upright.

(b) Remove the twenty bolts and remove the oil pan and gasket.

CAUTION:

- **Do not dent the oil pan.**
- **Do not turn the transmission over, as this will contaminate the valve body with the foreign materials in the bottom of the pan.**

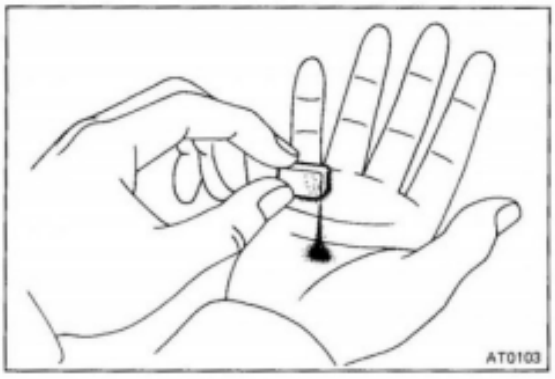

26. EXAMINE PARTICLES IN PAN

Remove the magnet and use it to collect any steel chips. Examine the chips and particles in the pan and on the magnet to anticipate what type of wear you will find in the transmission.

Steel (magnetic)...bearing, gear and clutch plate wear
Brass (non-magnetic)...bushing wear

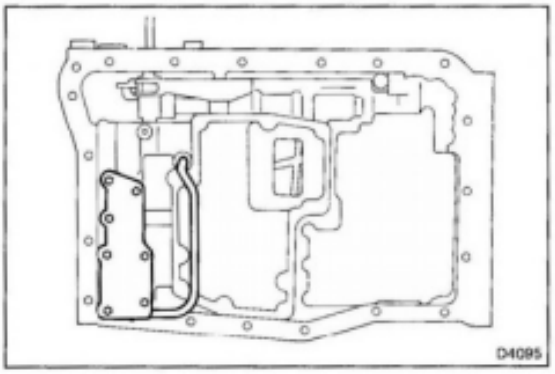

27. REMOVE OIL TUBE

(a) Remove the lock up relay valve body plate.

NOTE: Do not drop the lock up relay valve pins.

(b) Pry up both tube ends with the large screwdriver and remove the oil tube.

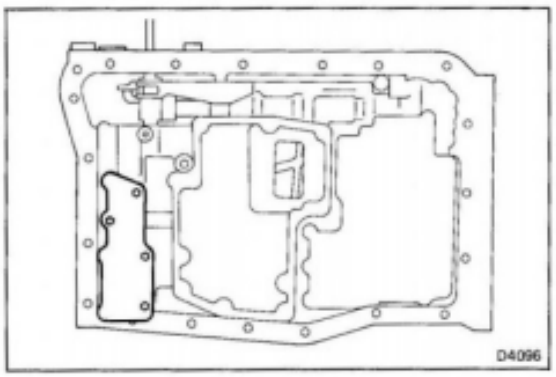

(c) Temporarily install the lock up relay valve body plate with four short bolts.

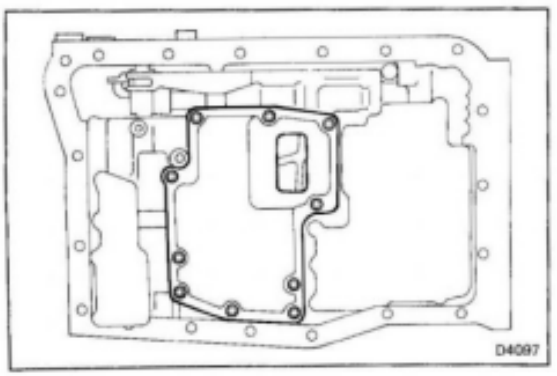

28. REMOVE OIL STRAINER

Remove the ten bolts and remove the oil strainer and gasket.

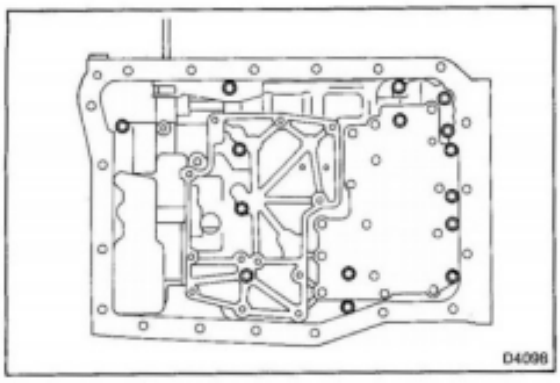

29. REMOVE VALVE BODY

(a) Remove the fifteen bolts.

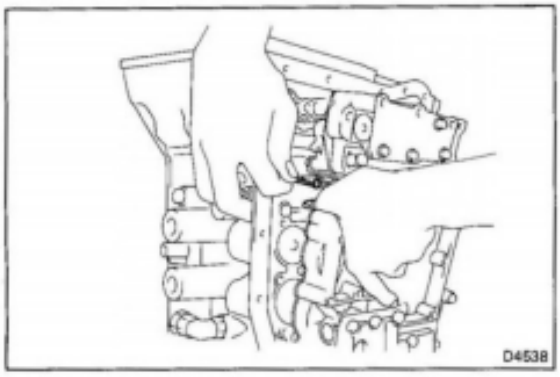

(b) Disconnect the throttle cable from the cam.

(c) Remove the valve body from the transmission case.

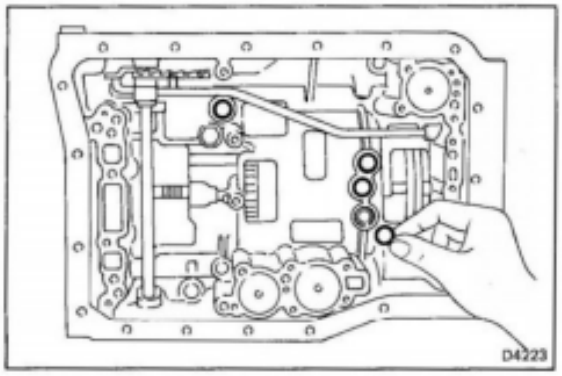

30. REMOVE FOUR TRANSMISSION CASE APPLICATION GASKETS

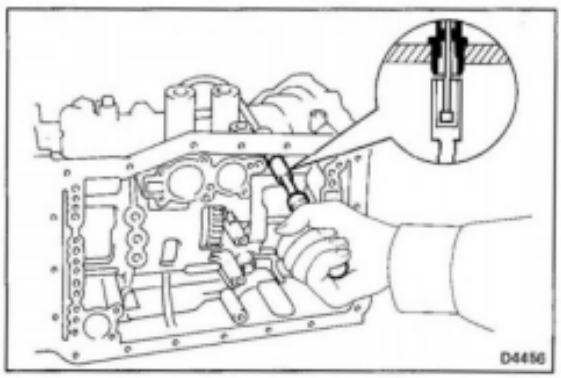

31. REMOVE THROTTLE CABLE

Using 10-mm socket, push the plastic throttle cable retainer, out of the transmission case.

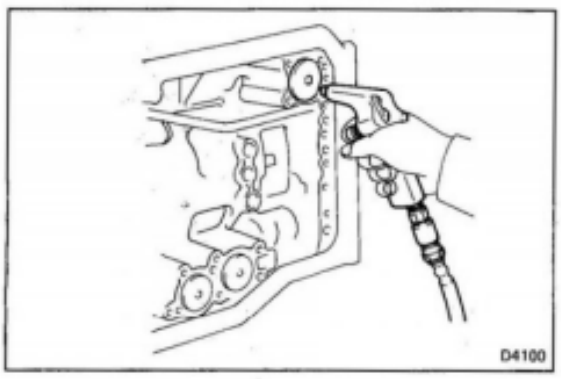

32. REMOVE C_2 ACCUMULATOR PISTON AND SPRING

Applying compressed air to the oil hole, remove the C_2 accumulator piston and spring as shown in the figure.

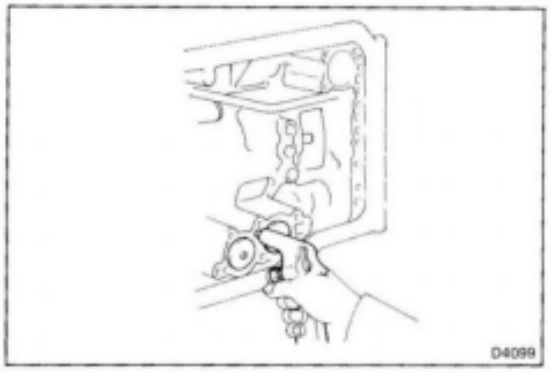

33. REMOVE B_0 AND B_2 ACCUMULATOR PISTONS AND SPRINGS

Applying compressed air to the oil hole, remove the B_0 and B_2 accumulator pistons and two springs as shown in the figure.

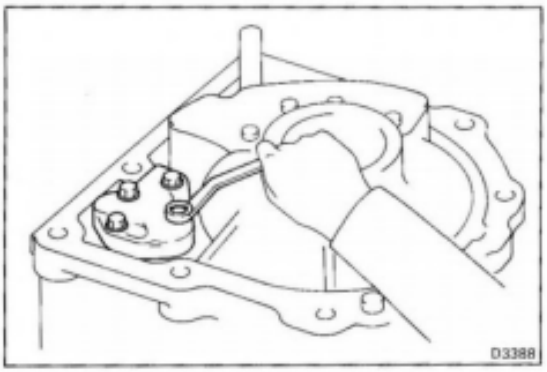

34. REMOVE C_1 ACCUMULATOR PISTON AND SPRING

(a) Remove the four bolts and remove the front clutch accumulator cover.

(b) Remove the plate and two gaskets.

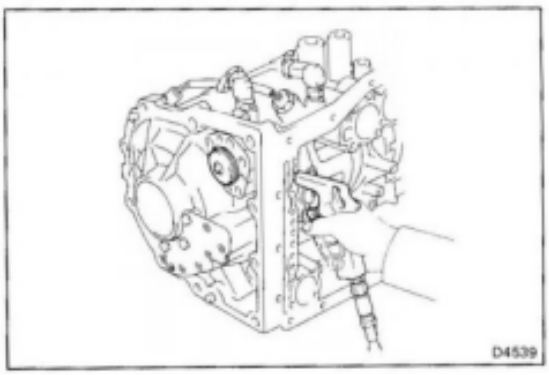

(c) Applying compressed air to the oil hole, remove the C_1 accumulator piston and spring as shown in the figure.

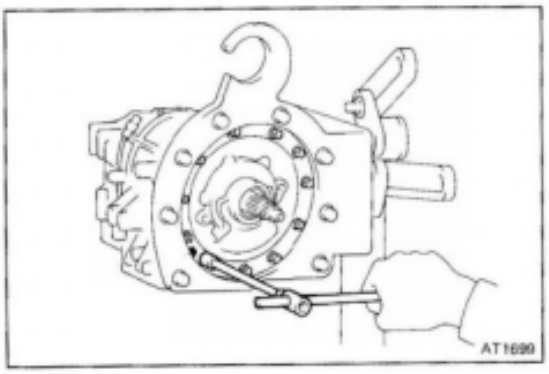

35. REMOVE OIL PUMP

(a) Place matchmarks on the oil pump body and transmission case.

(b) Remove the eleven bolts.

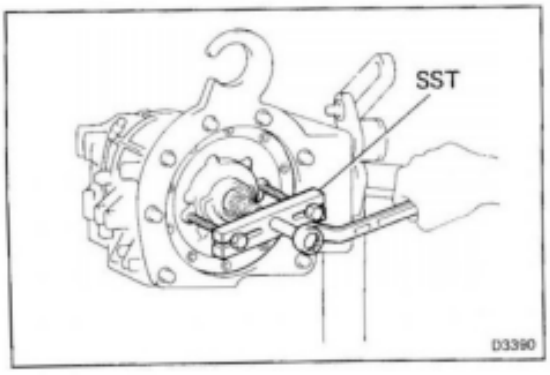

(c) Using SST, pull off the oil pump from the transmission case.

SST 09350-36010 (09350-06140)

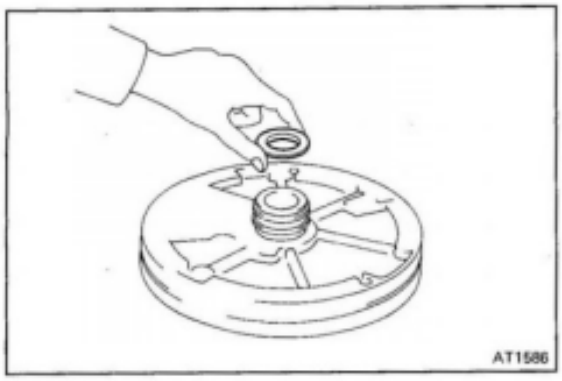

(d) Remove the race and O-ring.

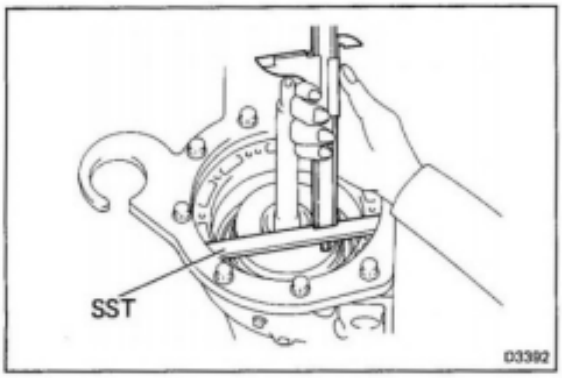

36. MEASURE DISTANCE BETWEEN TOP OF CASE AND CLUTCH DRUM

Set SST on the case as shown in the figure.

SST 09350-36010 (09350-06090)

Make a note of the distance for assembly.

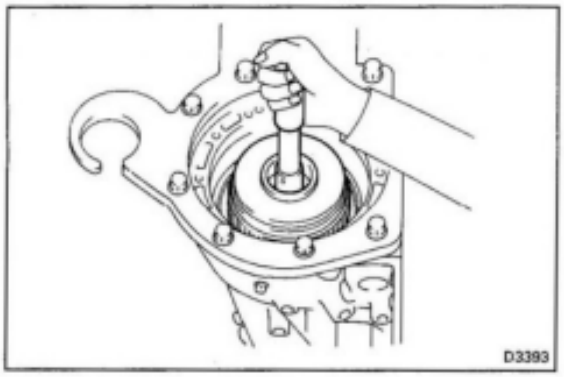

37. REMOVE OVERDRIVE DIRECT CLUTCH AND OVERDRIVE PLANETARY GEAR

Grasp the shaft and pull out the overdrive direct clutch and overdrive planetary gear.

Watch for bearings and races on both sides of assembly.

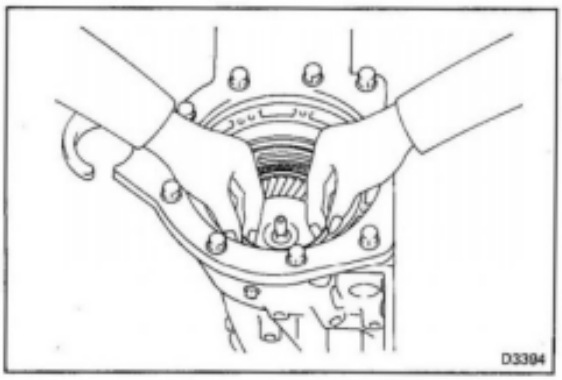

38. REMOVE OVERDRIVE PLANETARY RING GEAR

Watch for bearing and races on both sides of assembly.

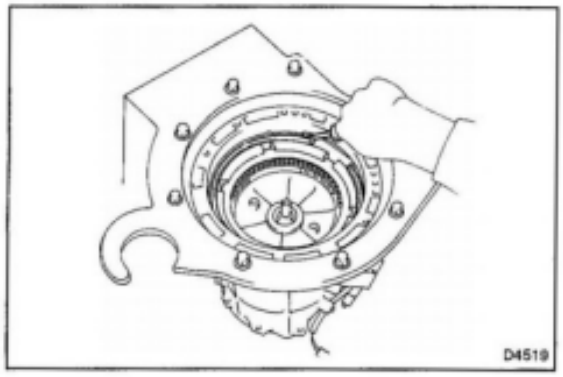

39. REMOVE OVERDRIVE SUPPORT

(a) Using a screwdriver, remove the snap ring.

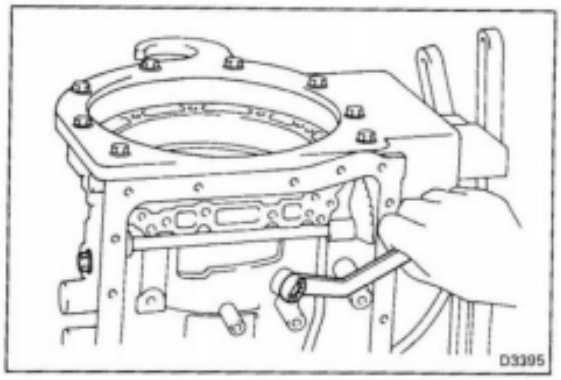

(b) Remove the three overdrive support lock bolts.

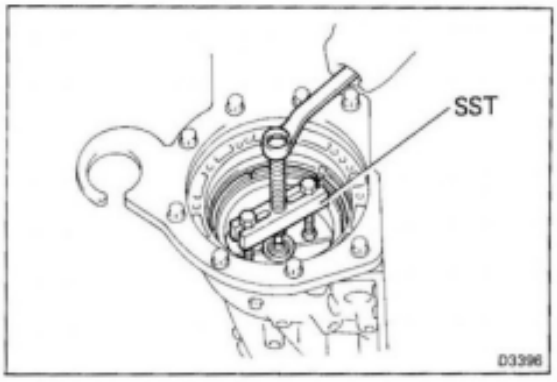

(c) Using SST, remove the overdrive support.

SST 09350-36010 (09350-06140)

(d) Remove the three O-rings from the overdrive support.

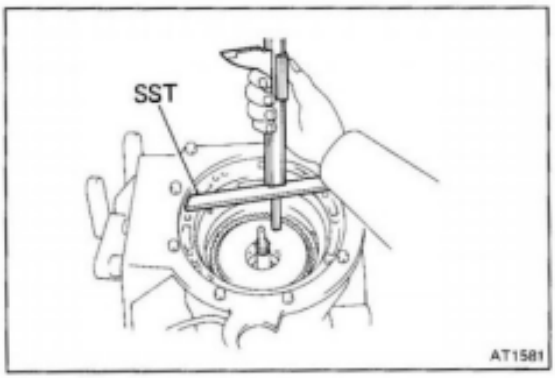

40. MEASURE DISTANCE BETWEEN TOP OF CASE AND CLUTCH DRUM

Set SST on the case as shown in the figure.

SST 09350-36010 (09350-06090)

Mark the note of the distance for assembly.

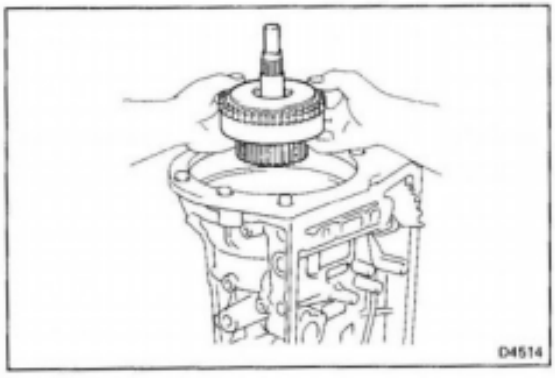

41. REMOVE FRONT CLUTCH ASSEMBLY

Remove the front clutch assembly from the rear clutch. Watch for bearing and races on both sides of assembly.

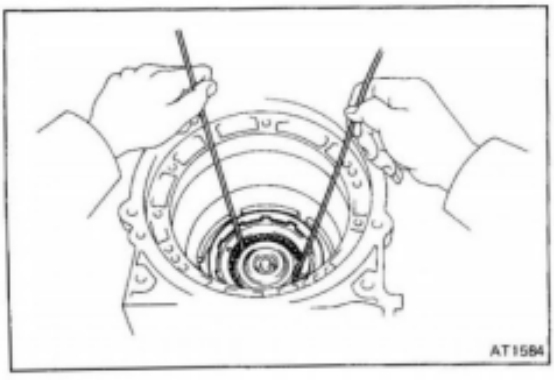

42. REMOVE REAR CLUTCH ASSEMBLY

Insert two wire hooks into flukes of the clutch disc and remove the rear clutch assembly.

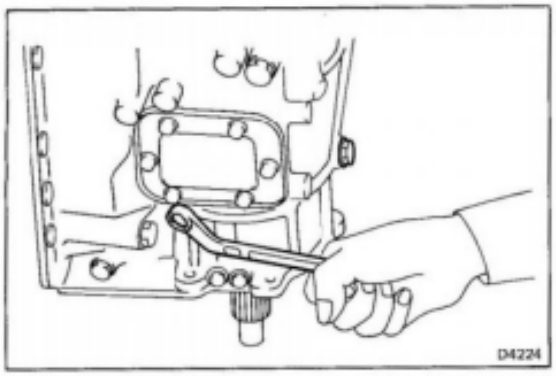

43. REMOVE CENTER SUPPORT

(a) Remove the three center support lock bolts.

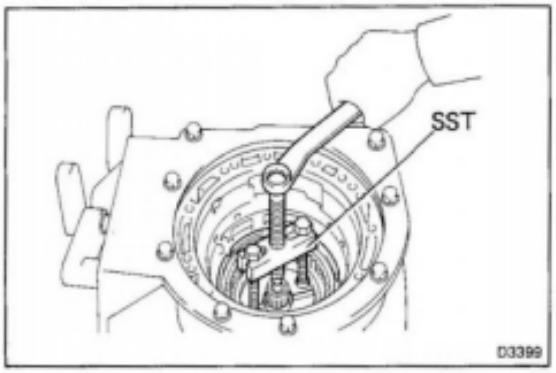

(b) Using SST, remove the center support.

SST 09350-36010 (09350-06140)

(c) Remove the three O-rings from the center support.

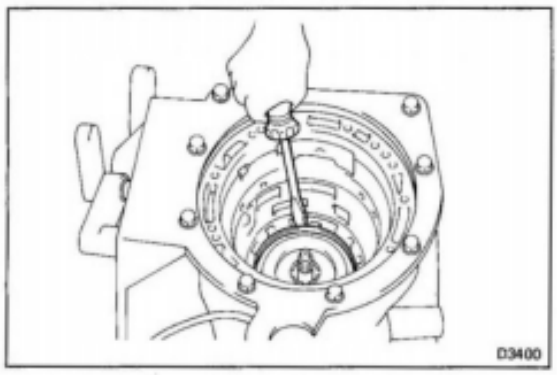

44. REMOVE PLANETARY GEAR AND OUTPUT SHAFT

(a) Using a screwdriver, remove the snap ring.

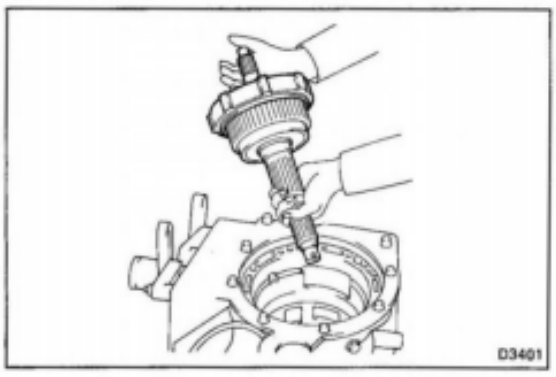

(b) Remove the planetary gear and output shaft with the one-way clutch.

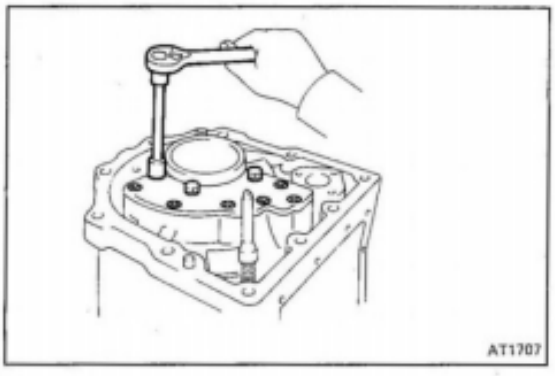

45. REMOVE TRANSMISSION REAR COVER

Remove the three bolts and six screws and remove the transmission rear cover and gasket.

DISASSEMBLY OF TRANSMISSION (A440L)

COMPONENTS

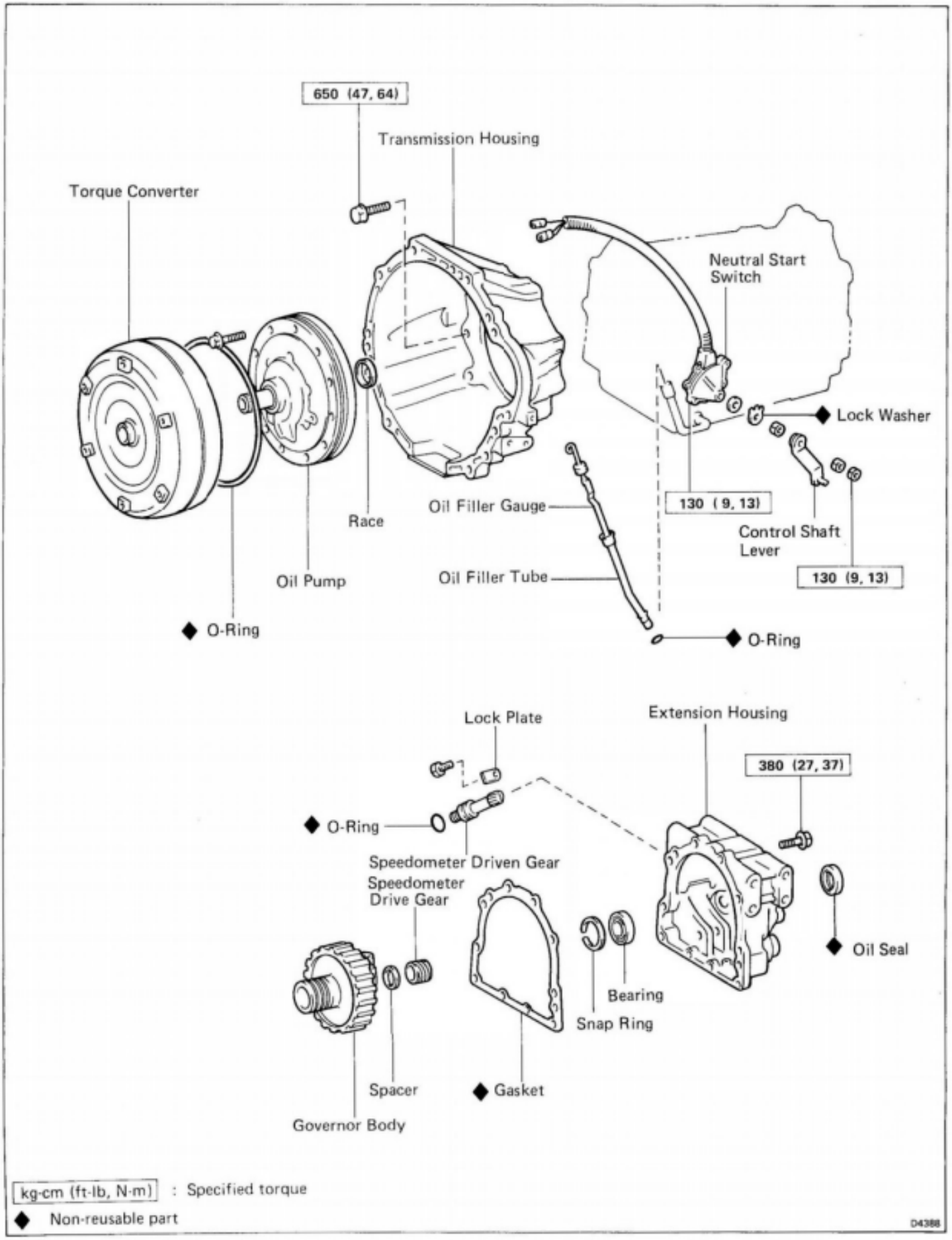

kg-cm (ft-lb, N-m) : Specified torque

◆ Non-reusable part

D4388

COMPONENTS (Cont'd)

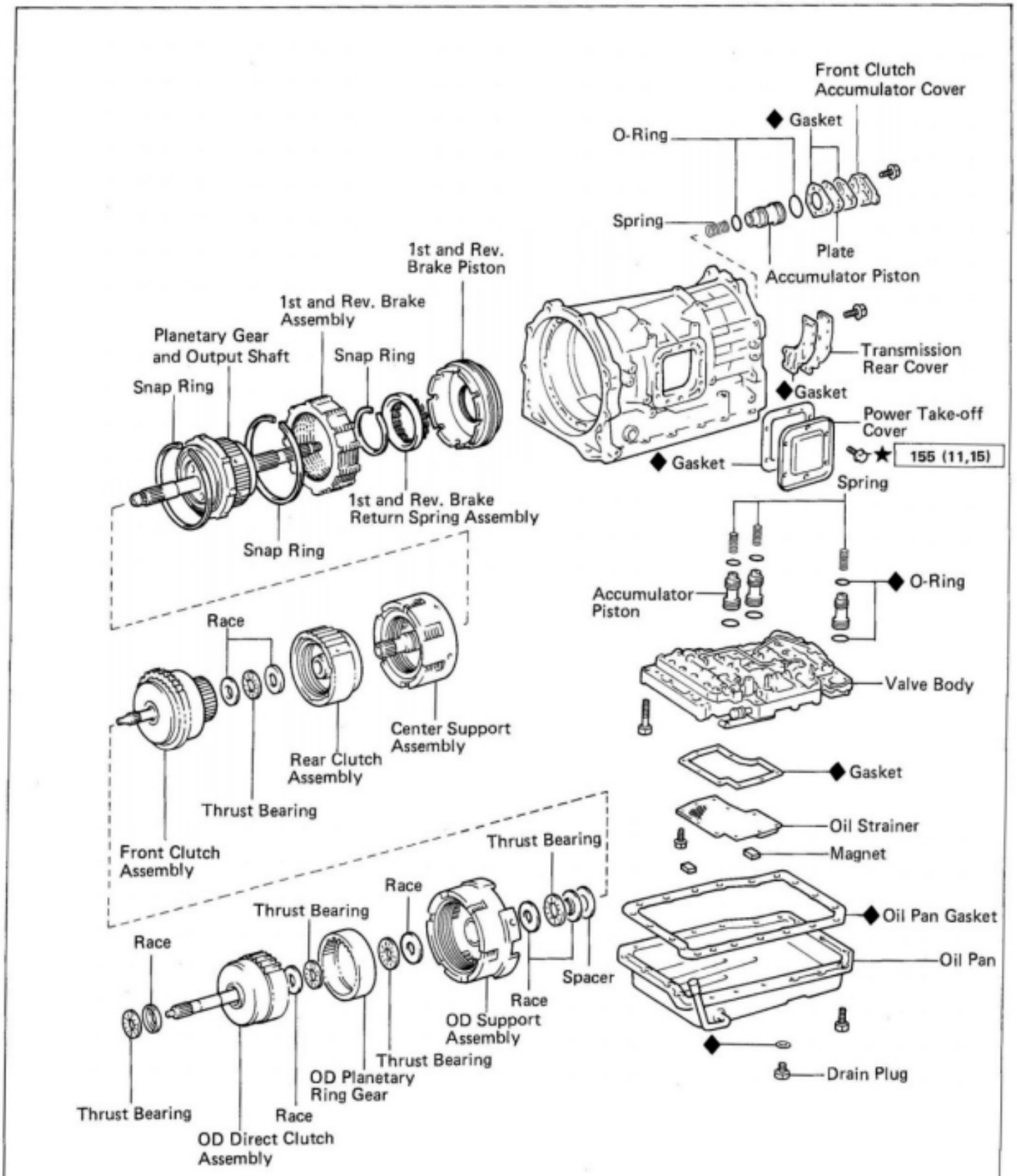

kg-cm (ft-lb, N·m) : Specified torque

◆ : Non-reusable part

★ : Precoated part

D4389

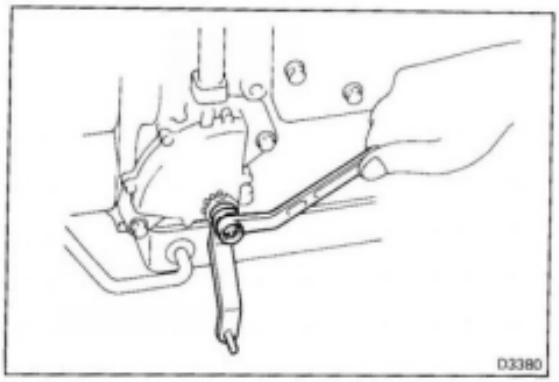

SEPARATE BASIC SUBASSEMBLY

1. REMOVE TORQUE CONVERTER
2. REMOVE OIL FILLER GAUGE AND TUBE
3. REMOVE CONTROL SHAFT LEVER

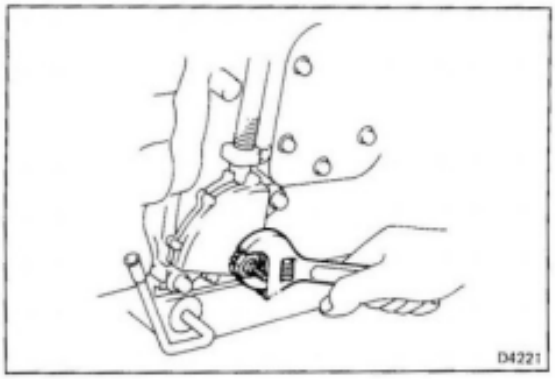

4. REMOVE NEUTRAL START SWITCH
   (a) Loosen the lock washer claw and remove the nut.
   (b) Remove the lock washer and grommet.

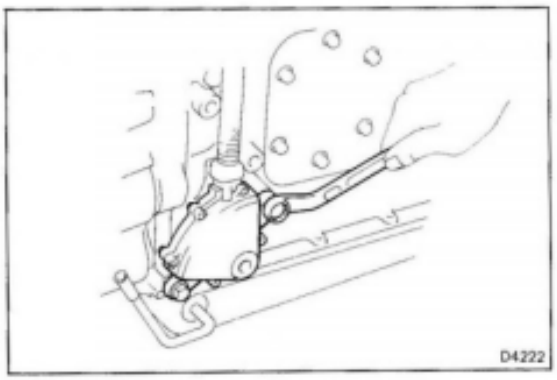

   (c) Remove the two bolts and neutral start switch.

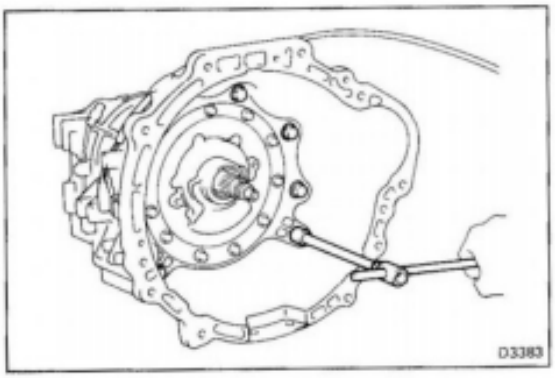

5. REMOVE TRANSMISSION HOUSING
   (a) Remove the throttle cable retaining plate.
   (b) Remove the eight bolts and transmission housing.

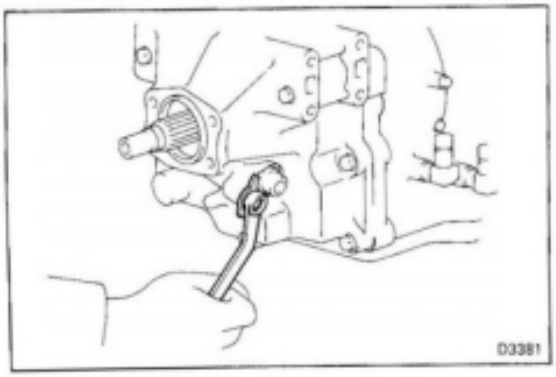

6. REMOVE SPEEDOMETER DRIVEN GEAR
   (a) Remove the lock plate
   (b) Remove the speedometer driven gear.
   (c) Remove the O-ring from the speedometer driven gear.

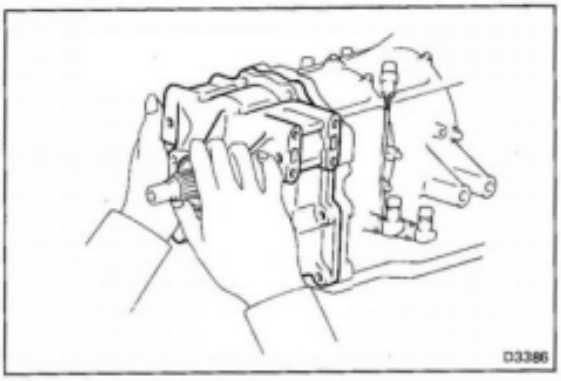

7. REMOVE EXTENSION HOUSING

(a) Remove the ten bolts and extension housing.

(b) Remove the gasket.

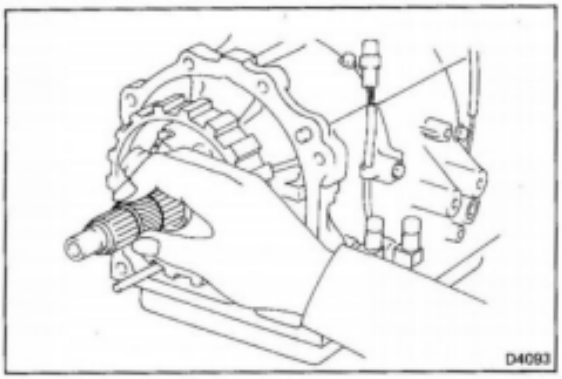

8. REMOVE SPEEDOMETER DRIVE GEAR AND SPACER

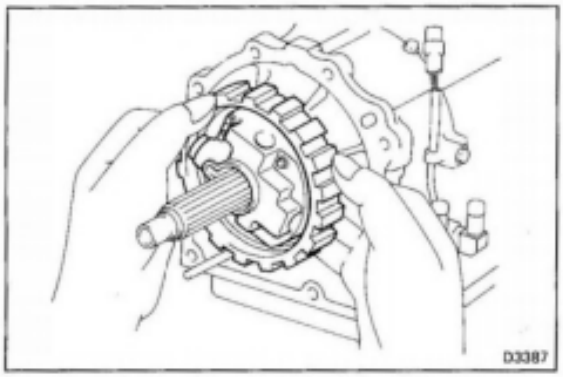

9. REMOVE GOVERNOR BODY

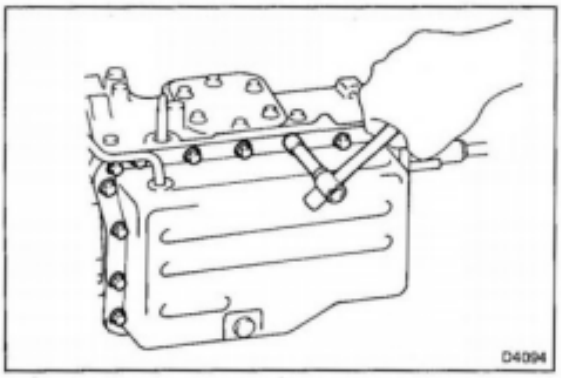

10. REMOVE OIL PAN

(a) Position the oil pan so it does not tilt upright.

(b) Remove the twenty bolts and remove the oil pan and gasket.

CAUTION:

- **Do not dent the oil pan.**
- **Do not turn the transmission over, as this will contaminate the valve body with the foreign materials in the bottom of the pan.**

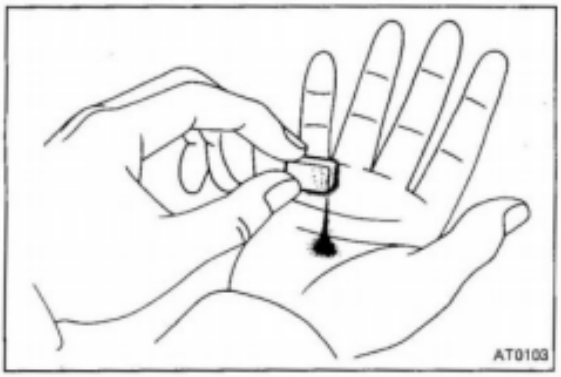

11. EXAMINE PARTICLES IN PAN

Remove the magnet and use it to collect any steel chips. Examine the chips and particles in the pan and on the magnet to anticipate what type of wear you will find in the transmission.

Steel (magnetic)...bearing, gear and clutch plate wear
Brass (non-magnetic)...bushing wear

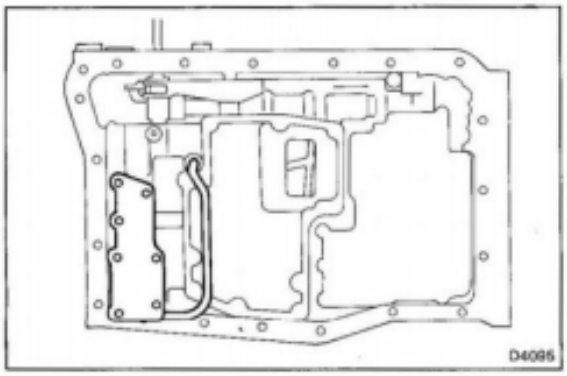

12. REMOVE OIL TUBE

(a) Remove the lock up relay valve body plate.

NOTE: Do not drop the lock up relay valve pins.

(b) Pry up both tube ends with the large screwdriver and remove the oil tube.

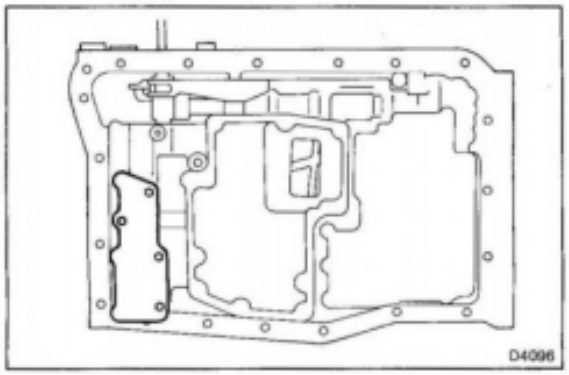

(c) Temporarily install the lock up relay valve body plate with the four short bolts.

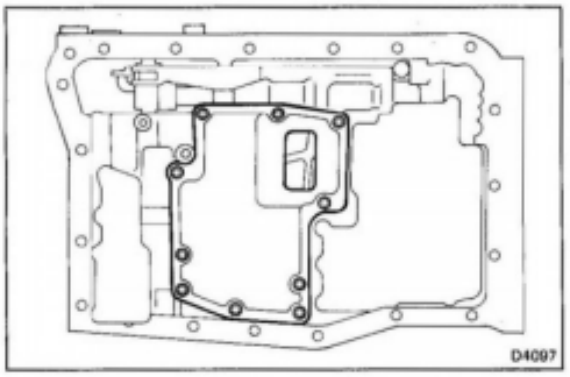

13. REMOVE OIL STRAINER

Remove the ten bolts and remove the oil strainer and gasket.

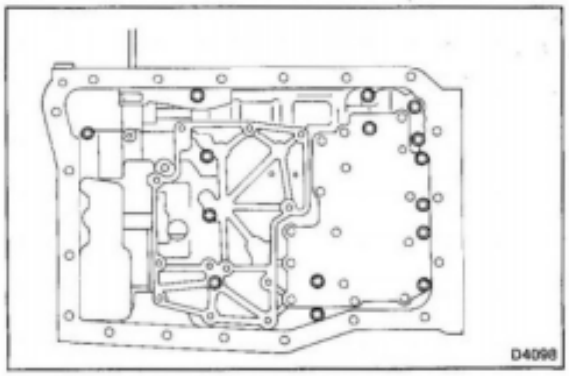

14. REMOVE VALVE BODY

(a) Remove the fifteen bolts.

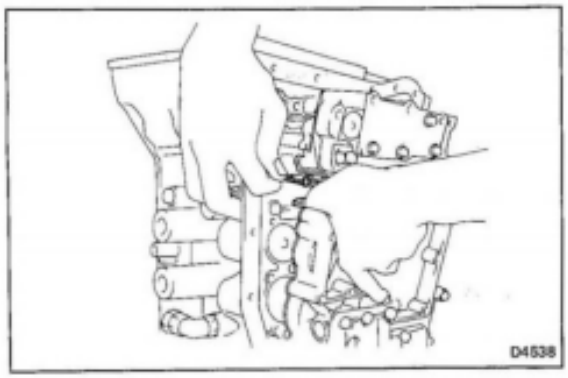

(b) Disconnect the throttle cable from the cam.

(c) Remove the valve body from the transmission case.

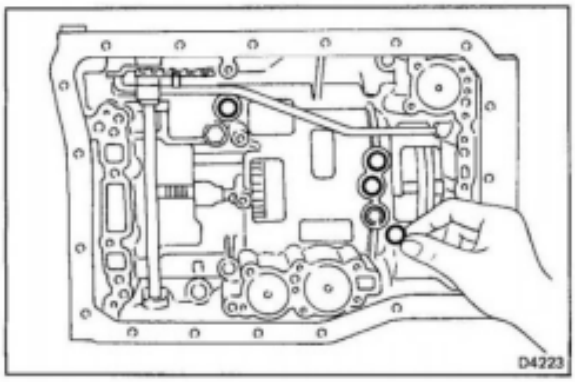

15. REMOVE FOUR TRANSMISSION CASE APPLICATION GASKETS

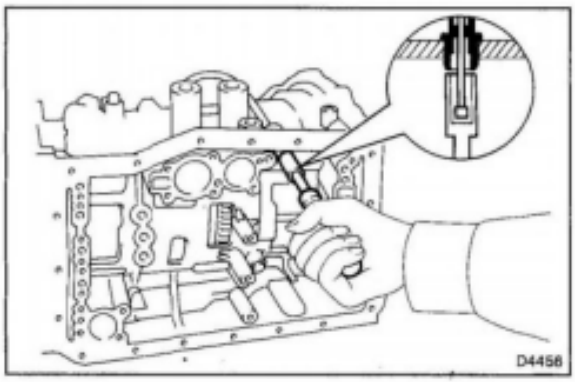

16. REMOVE THROTTLE CABLE

Using 10-mm socket, push the plastic throttle cable retainer, out of the transmission case.

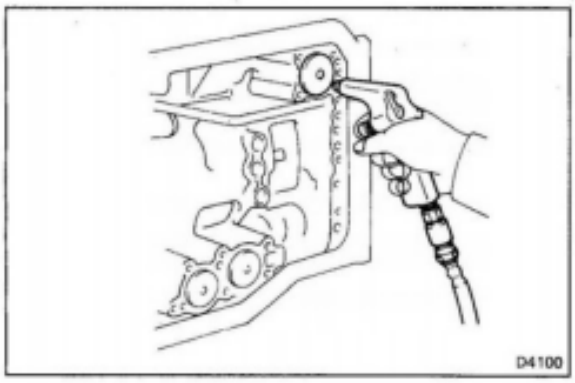

17. REMOVE C_2, B_0 AND B_2 ACCUMULATOR PISTONS AND SPRINGS

(a) Applying compressed air to the oil hole, remove the C_2 accumulator piston and spring as shown in the figure.

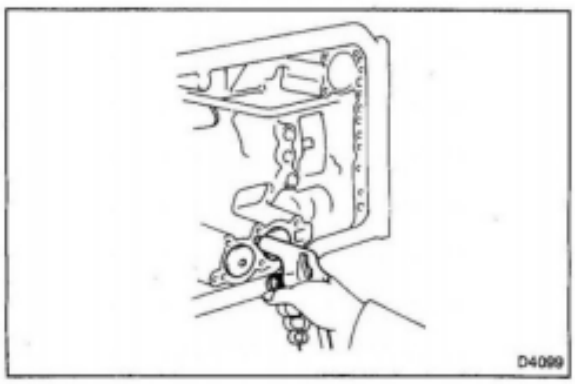

(b) Applying compressed air to the oil hole, remove the B_0 and B_2 accumulator pistons and two springs as shown in the figure.

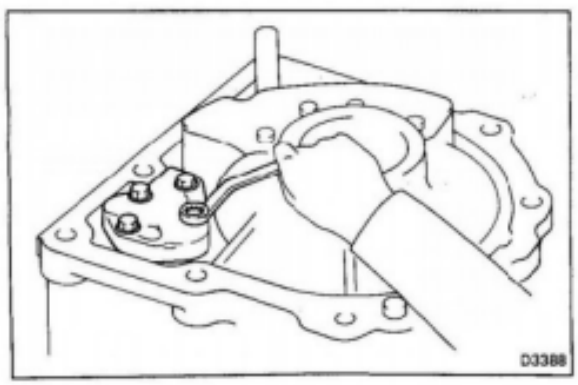

18. REMOVE C_1 ACCUMULATOR PISTON AND SPRING

(a) Remove the four bolts and remove the front clutch accumulator cover.

(b) Remove the plate and two gaskets.

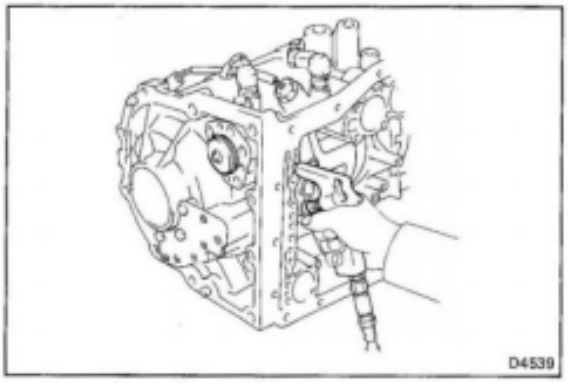

(c) Applying compressed air to the oil hole, remove the C_1 accumulator piston and spring as shown in the figure.

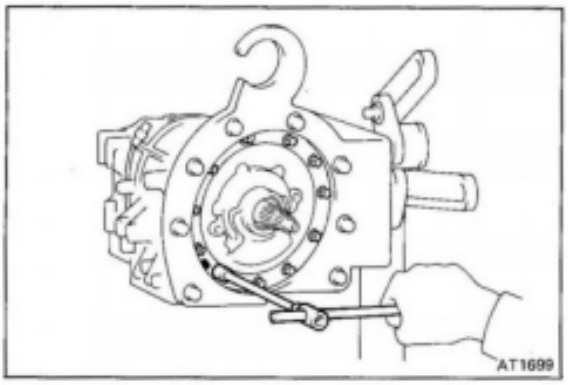

19. REMOVE OIL PUMP

(a) Place matchmarks on the oil pump body and transmission case.

(b) Remove the eleven bolts.

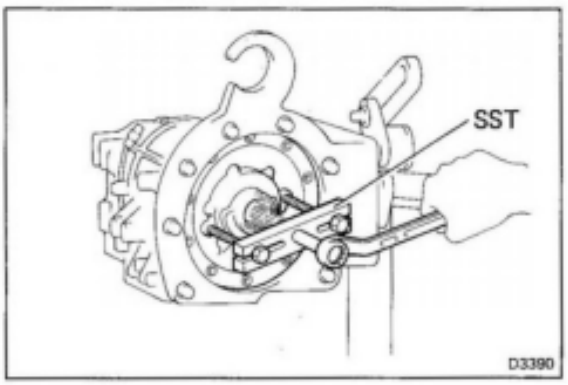

(c) Using SST, pull off the oil pump from the transmission case.

SST 09350-36010 (09350-06140)

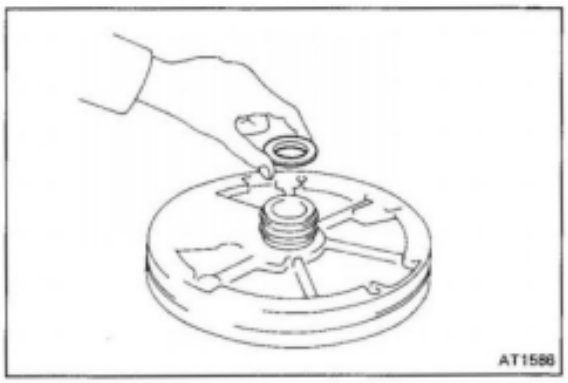

(d) Remove the race and O-ring.

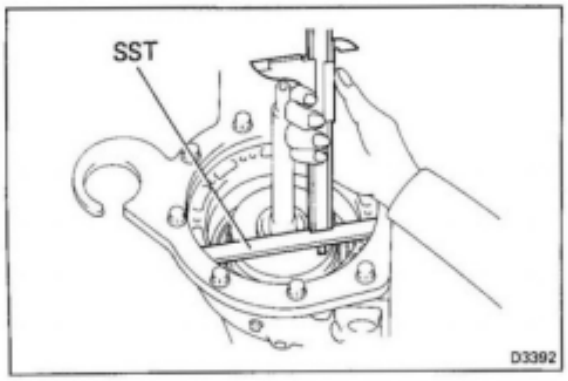

20. MEASURE DISTANCE BETWEEN TOP OF CASE AND CLUTCH DRUM

Set SST on the case as shown in the figure.

SST 09350-36010 (09350-06090)

Make a note of distance for reassembly.

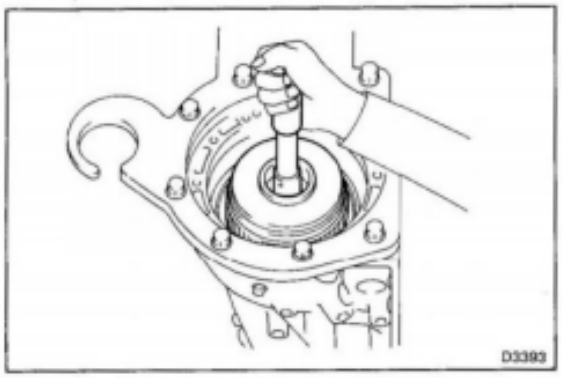

21. REMOVE OVERDRIVE DIRECT CLUTCH AND OVERDRIVE PLANETARY GEAR

Grasp the shaft and pull out the overdrive direct clutch and overdrive planetary gear.
Watch for bearings and races on both sides of the assembly.

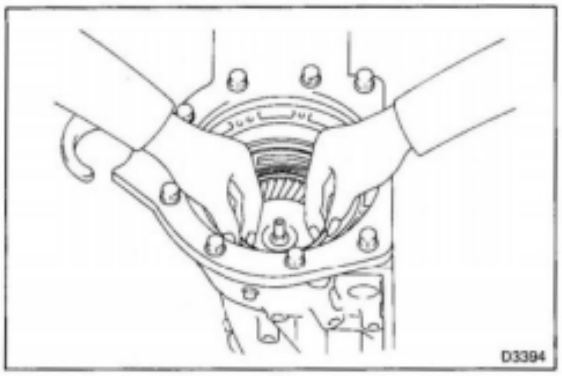

22. REMOVE OVERDRIVE PLANETARY RING GEAR

Watch for bearing and races on both sides of assembly.

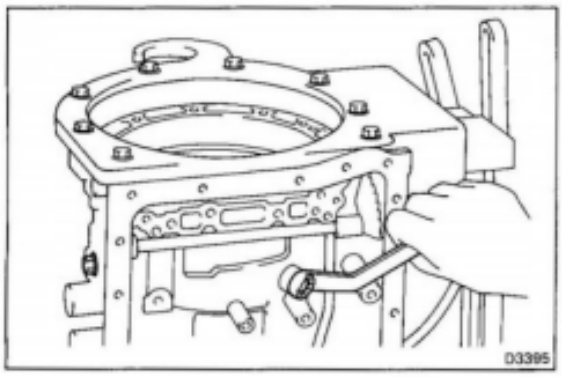

23. REMOVE OVERDRIVE SUPPORT

(a) Remove the three overdrive support lock bolts.

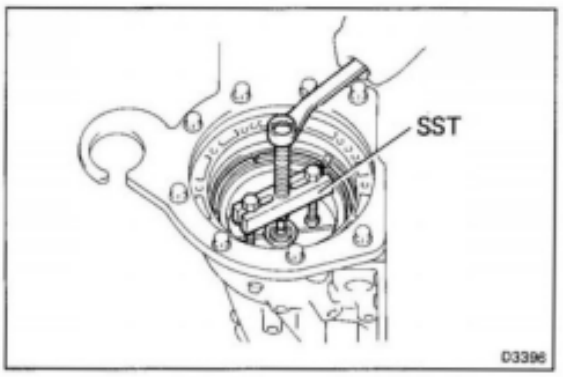

(b) Using SST, remove the overdrive support.

SST 09350-36010 (09350-06140)

(c) Remove the three O-rings from the overdrive support.

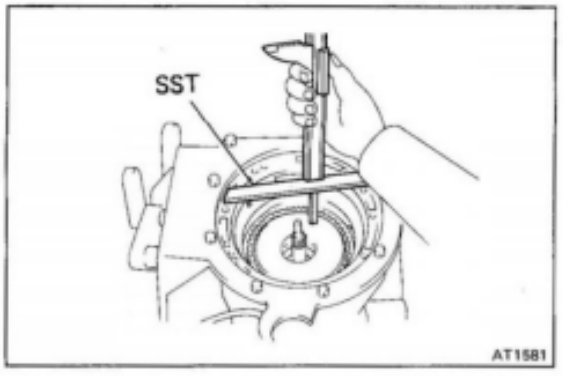

24. MEASURE DISTANCE BETWEEN TOP OF CASE AND CLUTCH DRUM

Set SST on the case as shown in the figure.

SST 09350-36010 (09350-06090)

Mark the note of the distance for assembly.

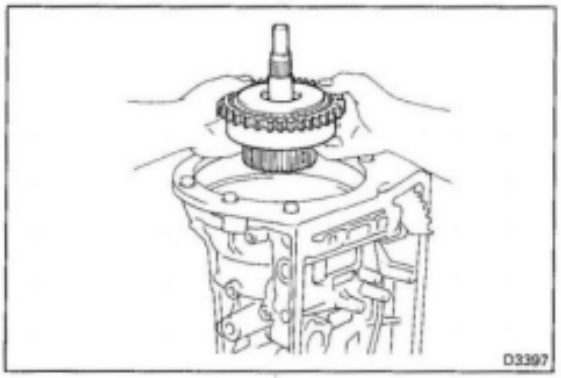

25. REMOVE FRONT CLUTCH ASSEMBLY

Remove the front clutch assembly from the rear clutch. Watch for bearing and races on both sides of assembly.

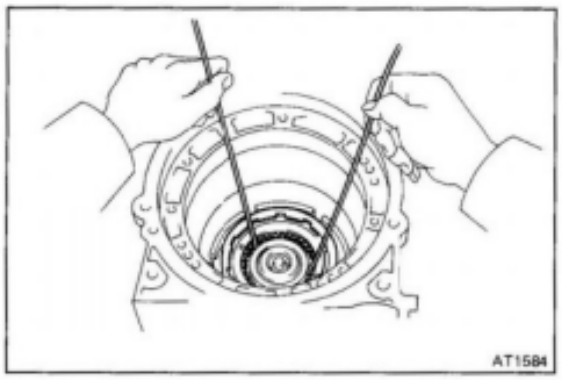

26. REMOVE REAR CLUTCH ASSEMBLY

Insert two wire hooks into the flukes of the clutch disc and remove.

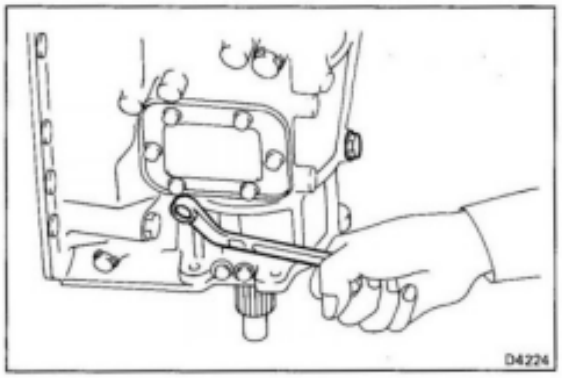

27. REMOVE CENTER SUPPORT

(a) Remove the three center support lock bolts.

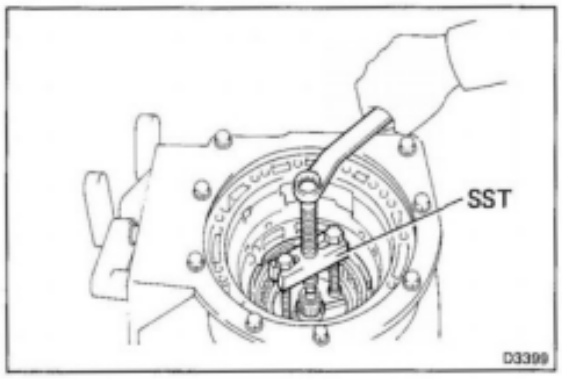

(b) Using SST, remove the center support.

SST 09350-36010 (09350-06140)

(c) Remove the three O-rings from the center support.

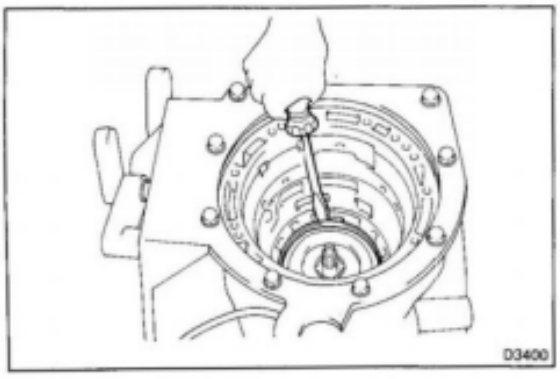

28. REMOVE PLANETARY GEAR AND OUTPUT SHAFT

(a) Using a screwdriver, remove the snap ring.

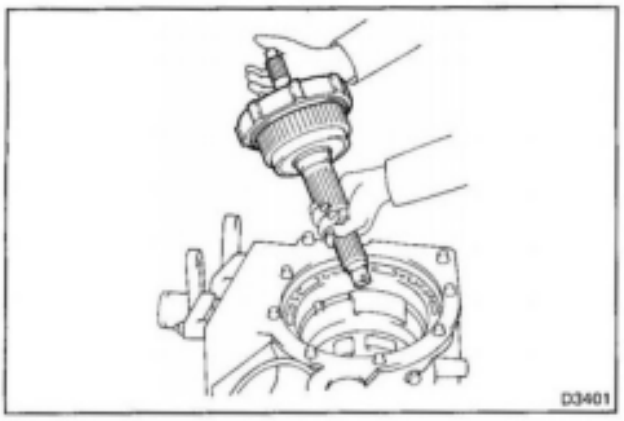

(b) Remove the planetary gear and output shaft with one-way clutch.

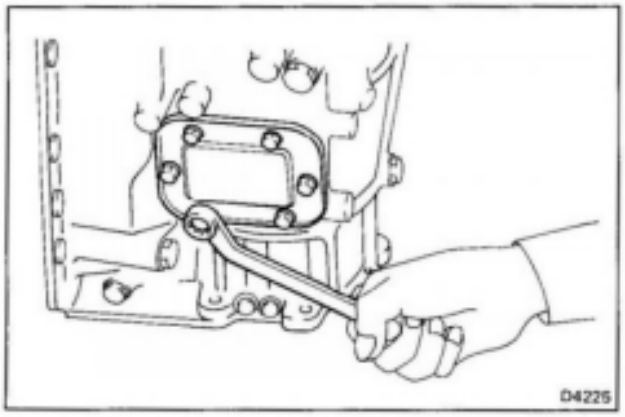

29. REMOVE POWER TAKE-OFF COVER

Remove the six bolts, and remove the power take-off cover and gasket.

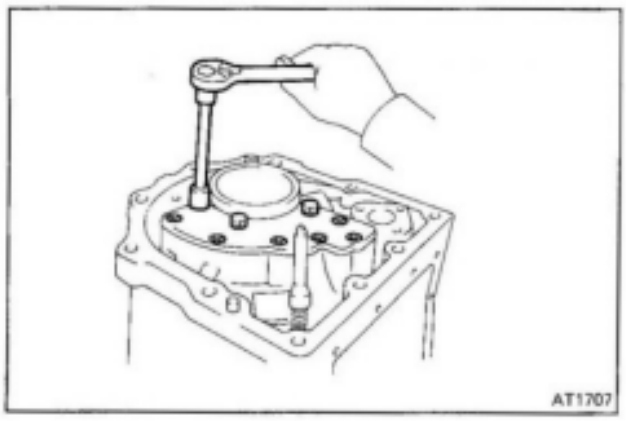

30. REMOVE TRANSMISSION REAR COVER

Remove the three bolts and six screws and remove the transmission rear cover and gasket.

COMPONENT GROUP DISASSEMBLY, INSPECTION AND ASSEMBLY NOTES:

The instructions here are organized so that you work on only one component group at a time. This will help avoid confusion from similar-looking parts of different subassemblies being on your workbench at the same time.
The component groups are inspected and repaired from the converter housing side.

As much as possible, complete the inspection, repair and assembly before proceeding to the next component group. If a component group cannot be assembled because parts are being ordered, be sure to keep all parts of that group in a separate container while proceeding with disassembly, inspection, repair and assembly of other component groups.
Recommended ATF type DEXRON® II.

GENERAL CLEANING NOTES:

1. All disassembled parts should be washed clean with any fluid passages and holes blown through with compressed air.
2. When using compressed air to dry parts, always aim away from yourself to prevent accidentally spraying automatic transmission fluid or kerosene in your face.
3. The recommended automatic transmission fluid or kerosene should be used for cleaning.

PARTS ARRANGEMENT:

1. After cleaning, the parts should be arranged in proper order to allow performing inspection, repairs, and reassembly with efficiency.
2. When disassembling a valve body, be sure to keep each valve together with the corresponding spring.
3. New brakes and clutches that are to be used for replacement must be soaked in transmission fluid for at least two hours before assembly.

GENERAL ASSEMBLY:

1. All oil seal rings, clutch discs, clutch plates, rotating parts, and sliding surfaces should be coated with transmission fluid prior to reassembly.
2. All gaskets and rubber O-rings should be replaced.
3. Make sure that the ends of a snap ring are not aligned with one of the cutouts and are installed in the groove correctly.
4. If a worn bushing is to be replaced, the subassembly containing that bushing must be replaced.
5. Check thrust bearings and races for wear or damage. Replace if necessary.
6. Use petroleum jelly to keep parts in place.

MANUAL VALVE LEVER AND SHAFT

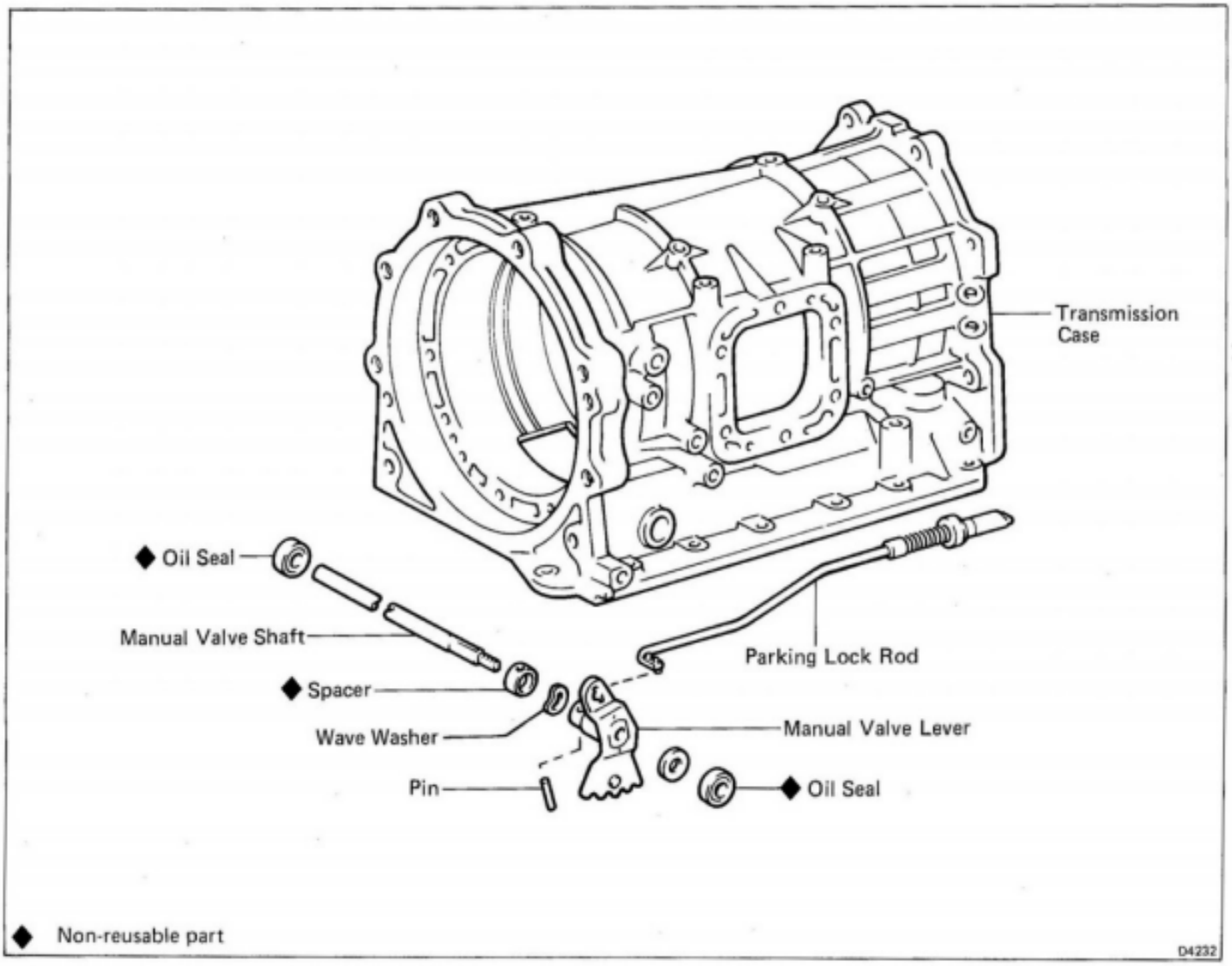

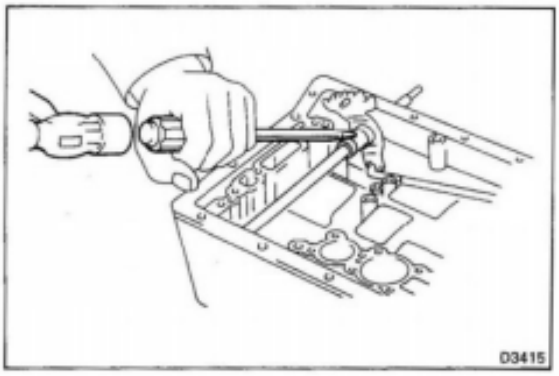

1. REMOVE MANUAL VALVE LEVER AND SHAFT

(a) Using a screwdriver or chisel, cut off the spacer and remove it from the shaft.

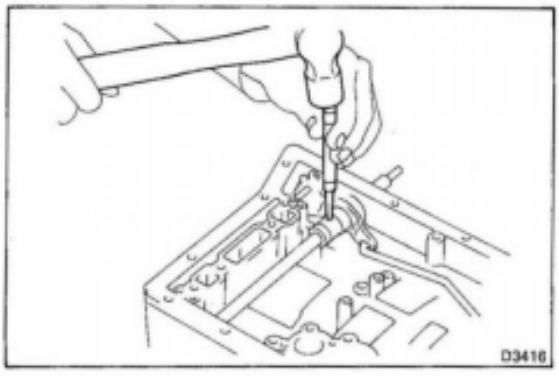

(b) Using a punch, drive out the pin.

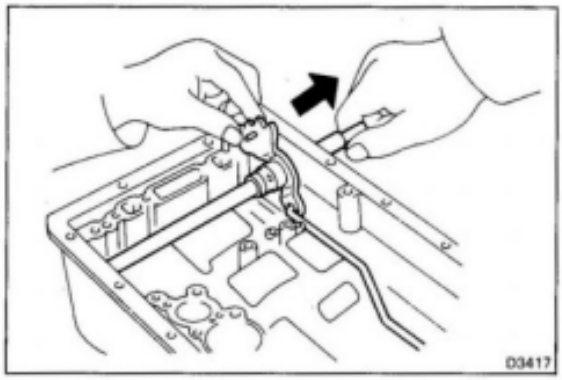

(c) Pull the manual valve shaft out through the case by the threads.

(d) Disconnect the parking lock rod from the manual valve lever.

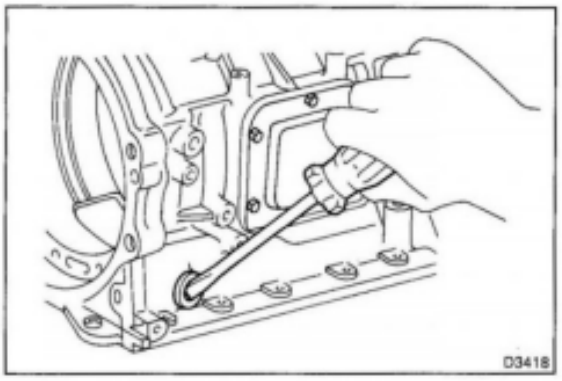

2. REMOVE OIL SEAL

Using a screwdriver, remove the oil seal.

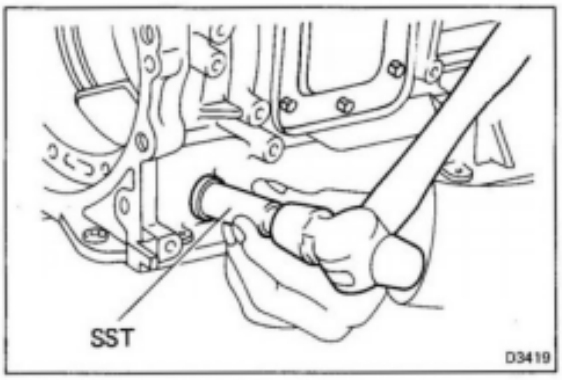

3. INSTALL NEW OIL SEAL

(a) Coat a new oil seal lip with MP grease.

(b) Using SST, drive in the oil seal.

SST 09350-36010 (09350-06150)

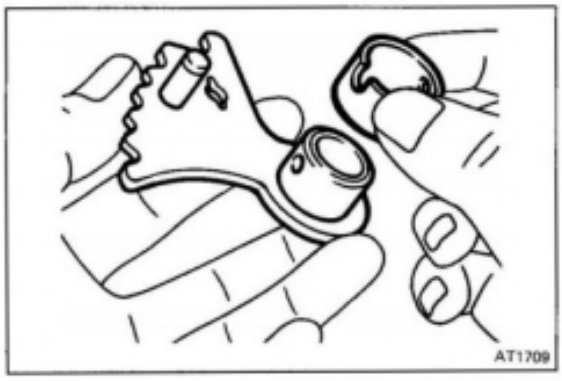

4. INSTALL MANUAL VALVE LEVER AND SHAFT

(a) Assemble a new spacer to the manual valve lever.

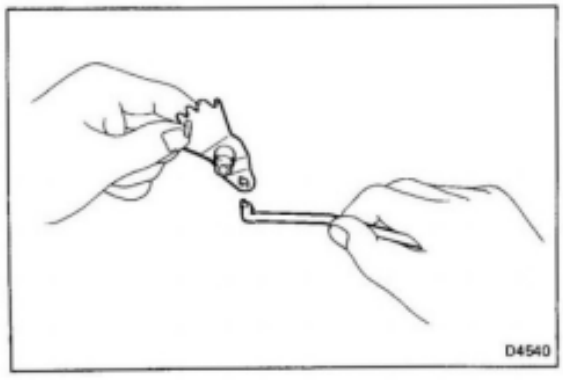

(b) Connect the parking lock rod to the manual valve lever.

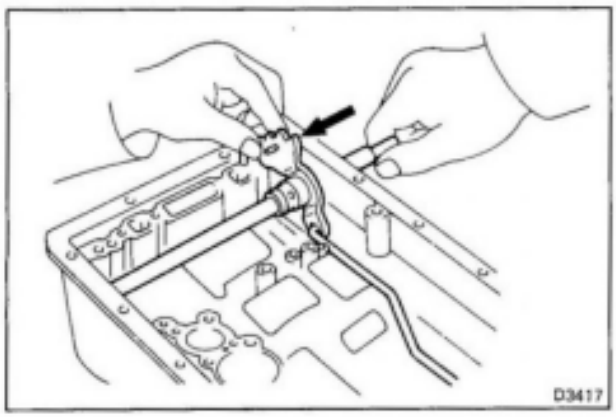

(c) Install the manual valve shaft and wave washer to the transmission case through the manual valve lever by the thread.

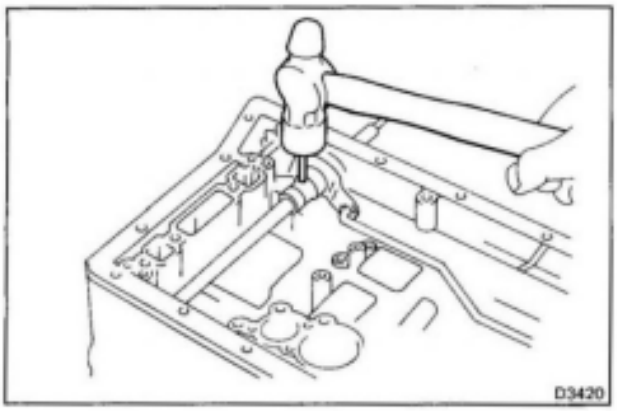

(d) Drive in the pin with slot at a right angle to the shaft.

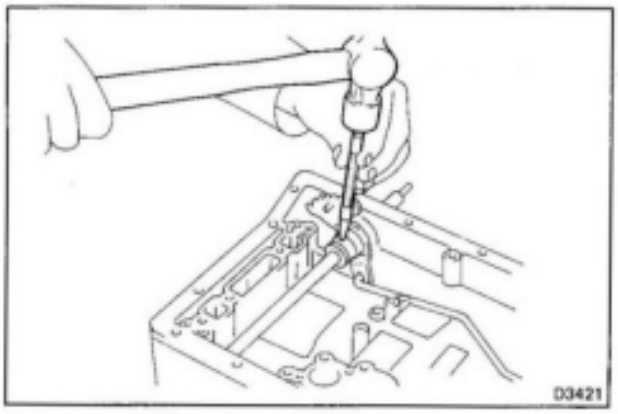

(e) Match the spacer hole to the lever calking hollow and calk the spacer to the lever.

(f) Make sure the manual valve shaft turns smoothly.

PARKING LOCK PAWL (A440F)

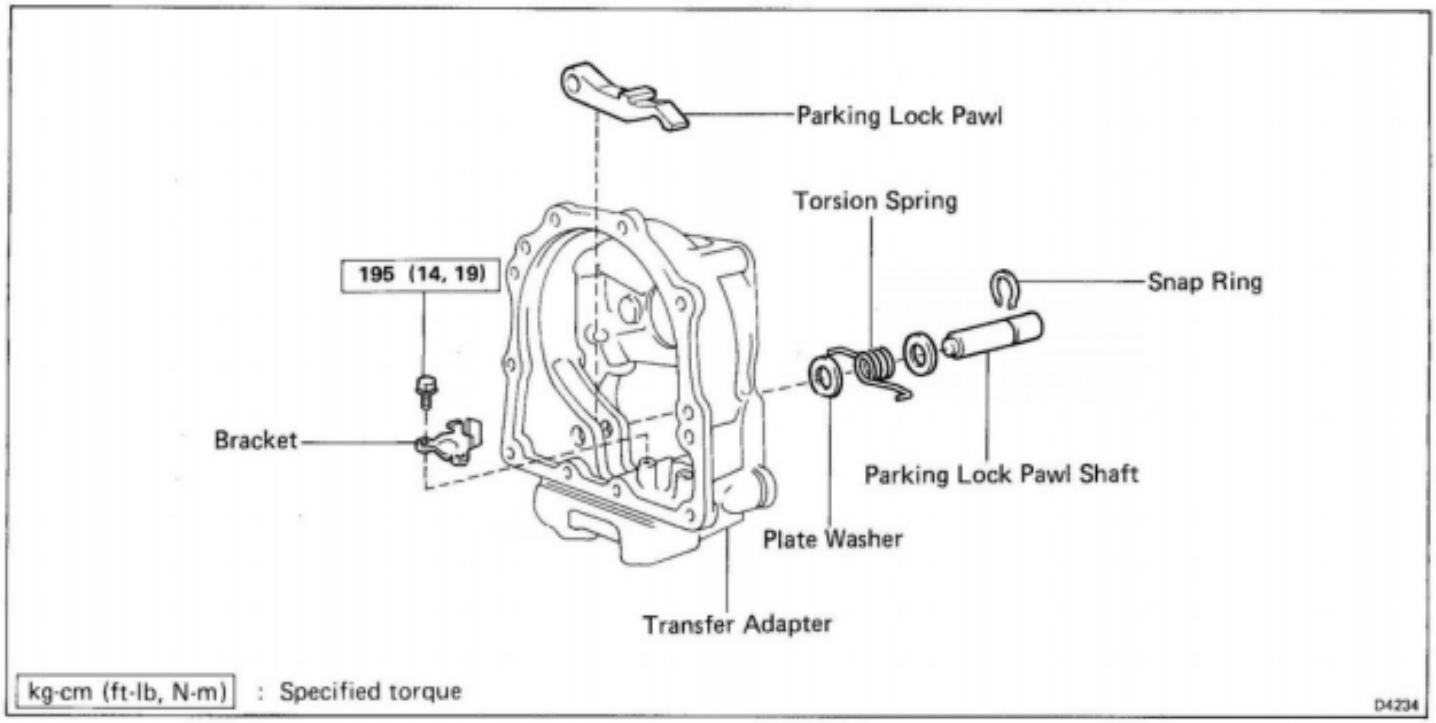

kg-cm (ft-lb, N-m) : Specified torque

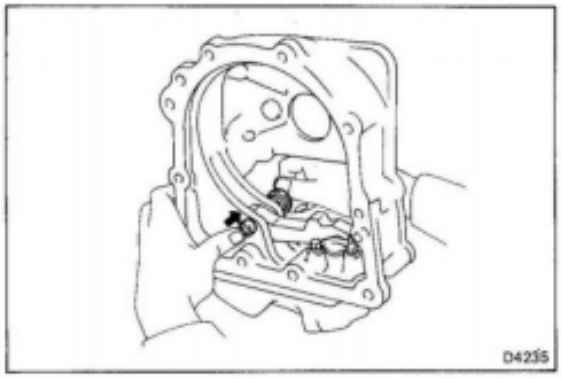

DISASSEMBLY OF PARKING LOCK PAWL

1. REMOVE PARKING LOCK PAWL SHAFT

   Remove the pawl shaft, torsion spring and plate washers from the transfer adapter.

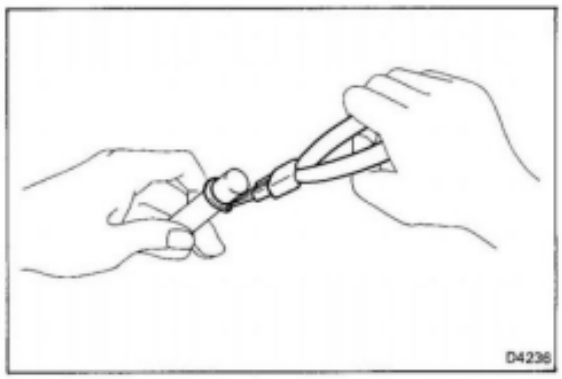

2. REMOVE SNAP RING FROM PAWL SHAFT WITH SNAP RING PLIERS

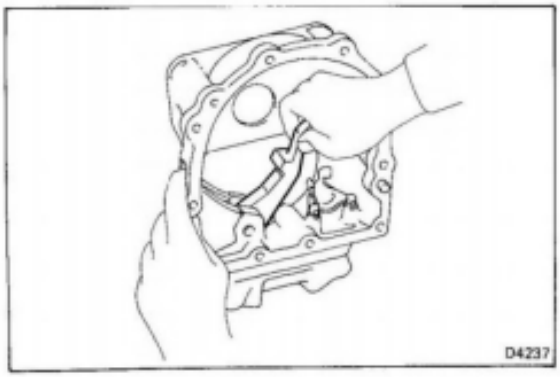

3. REMOVE PARKING LOCK PAWL FROM TRANSFER ADAPTER

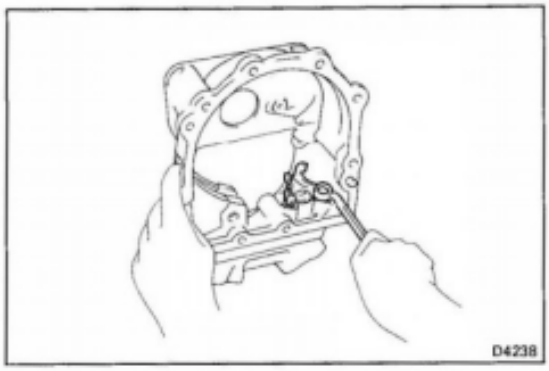

4. REMOVE BRACKET

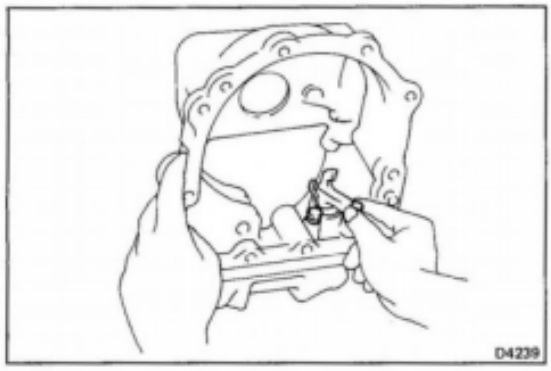

ASSEMBLY OF PARKING LOCK PAWL

1. INSTALL BRACKET TO TRANSFER ADAPTER

(a) Temporarily install the bracket with the two bolts.

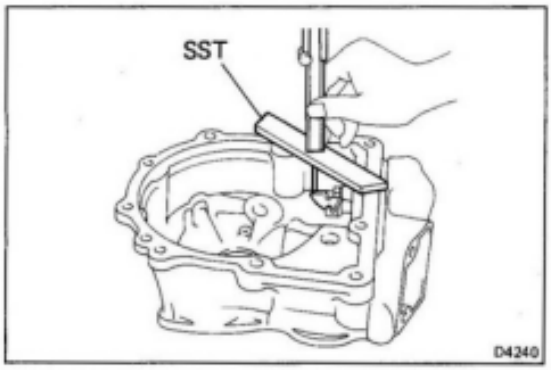

(b) Using SST and calipers, set the bracket so the distance between the transfer adapter surface and the top of the bracket tab is the standard distance.

Total distance – SST thickness = STD distance
STD distance: 47.5 – 47.6 mm (1.870 – 1.874 in.)

SST 09350-36010 (09350-06090)

(c) Tighten the two bolts.

Torque: 195 kg-cm (14 ft-lb, 19 N·m)

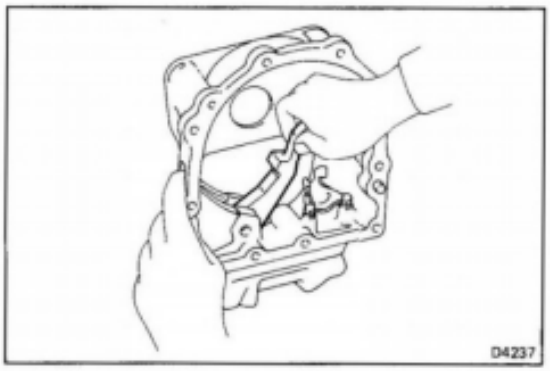

2. INSTALL PARKING LOCK PAWL

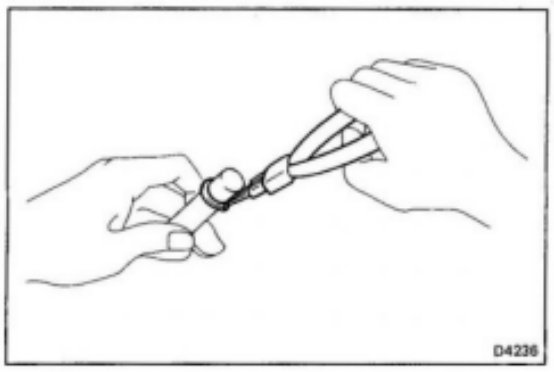

3. INSTALL SNAP RING TO PAWL SHAFT

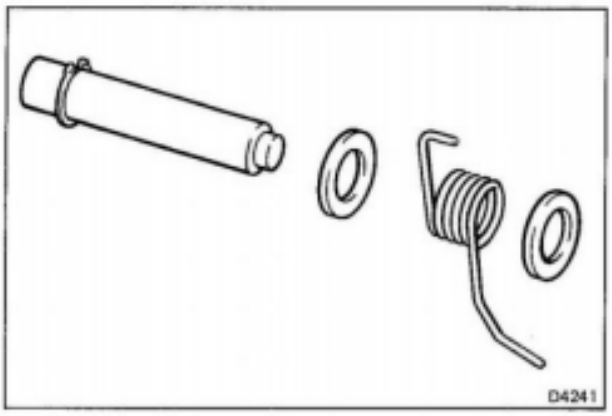

4. INSTALL PARKING LOCK PAWL SHAFT

(a) Install the two plate washers and torsion spring to the pawl shaft.

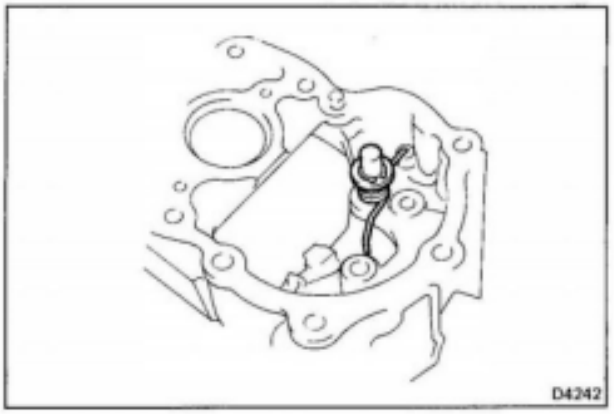

(b) Insert the spring end to the hole and install the pawl shaft.

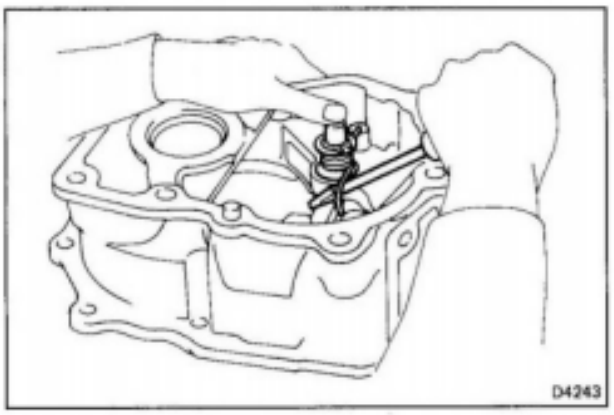

(c) Hold the pawl shaft, hook another spring end to the parking lock pawl with a screwdriver.

(d) Make sure the parking lock pawl moves smoothly.

PARKING LOCK PAWL (A440L)

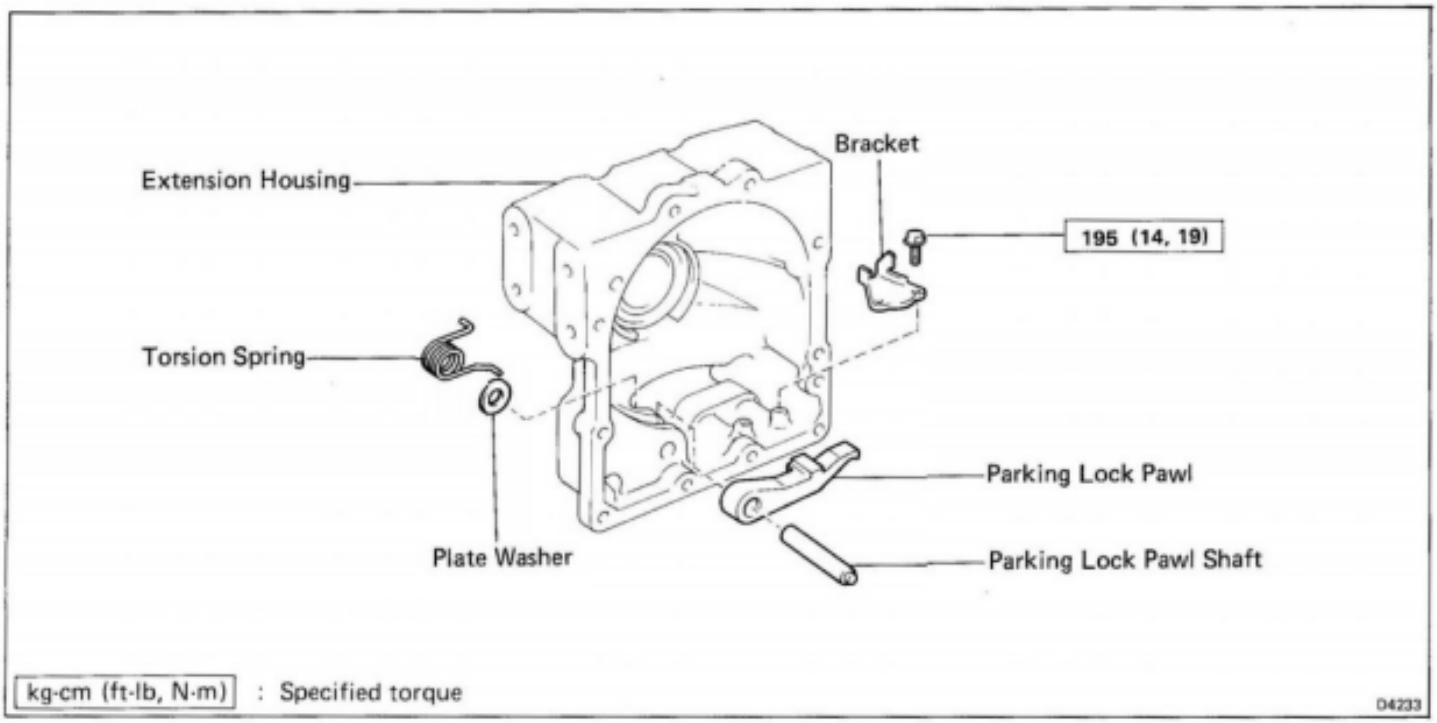

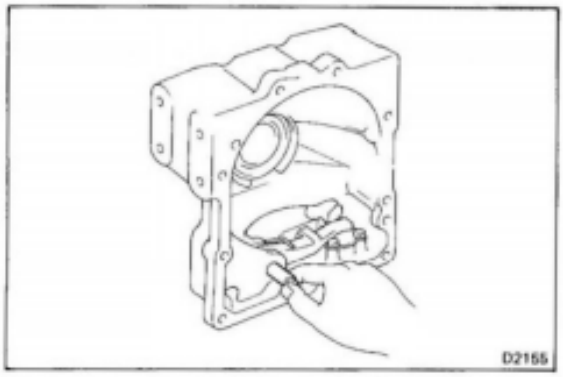

DISASSEMBLY OF PARKING LOCK PAWL

1. REMOVE PARKING LOCK PAWL SHAFT

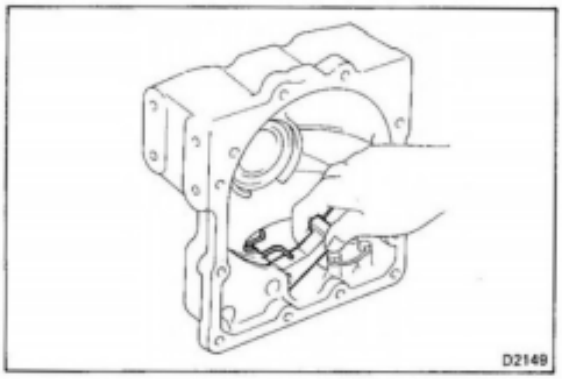

2. REMOVE PARKING LOCK PAWL, TORSION SPRING AND PLATE WASHER

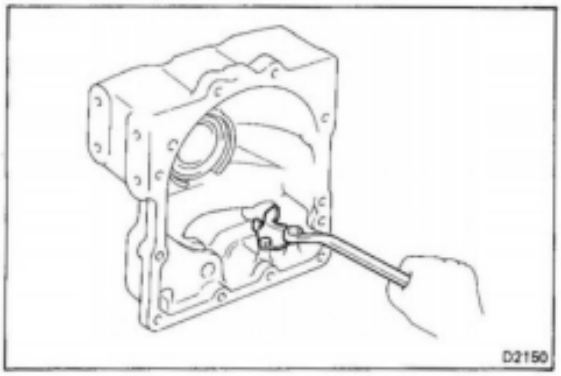

3. REMOVE BRACKET

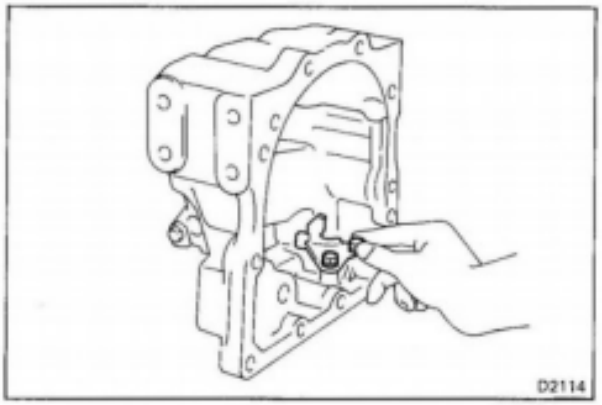

ASSEMBLY OF PARKING LOCK PAWL

1. INSTALL BRACKET TO EXTENSION HOUSING

(a) Temporarily install the bracket with the two bolts.

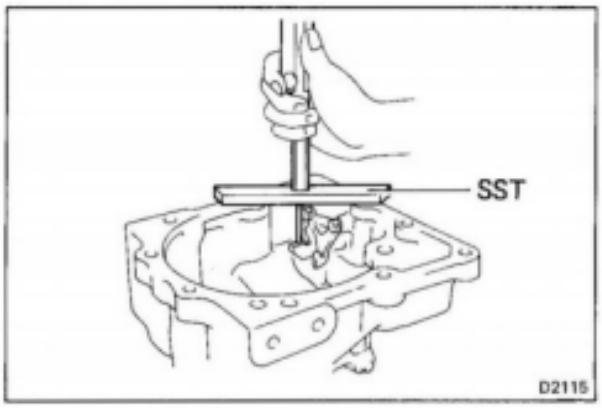

(b) Using SST and calipers, set the bracket so the distance between the extension housing surface and the top of the bracket tab is the standard distance.

Total distance – SST thickness = STD distance
STD distance: 47.5 – 47.6 mm (1.870 – 1.874 in.)

SST 09350-36010 (09350-06090)

(c) Tighten the two bolts.

Torque: 195 kg-cm (14 ft-lb, 19 N·m)

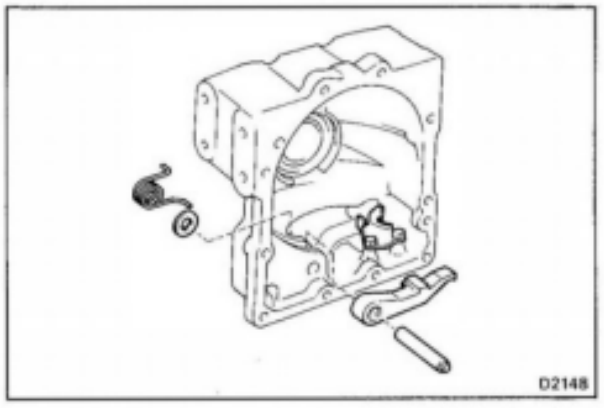

2. INSTALL PARKING LOCK PAWL

(a) Insert the torsion spring end to the hole of the extension housing.

(b) Install the parking lock pawl, shaft and plate washer.

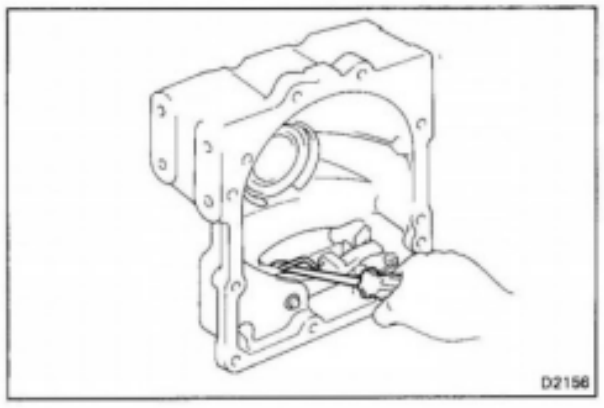

(c) Hook another spring end to the parking lock pawl.

(d) Make sure the parking lock pawl moves smoothly.

EXTENSION HOUSING (A440L)

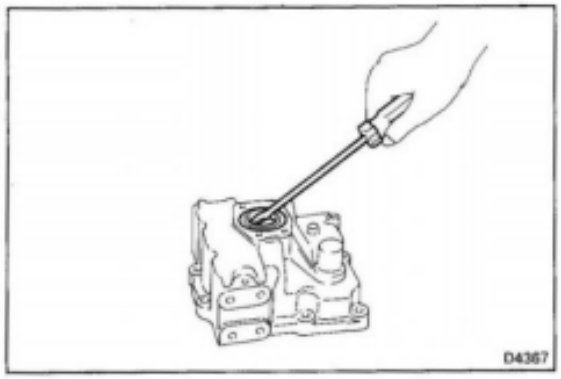

1. REMOVE OIL SEAL WITH SCREWDRIVER

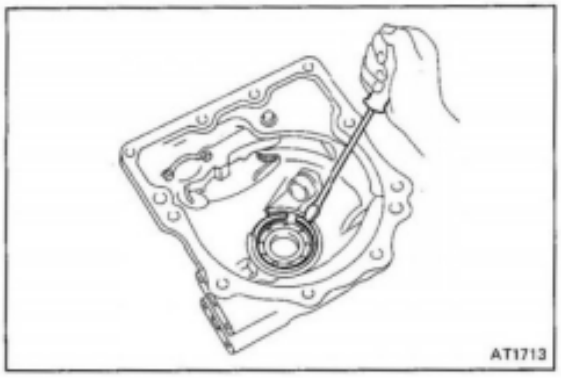

2. REMOVE SNAP RING WITH SCREWDRIVER

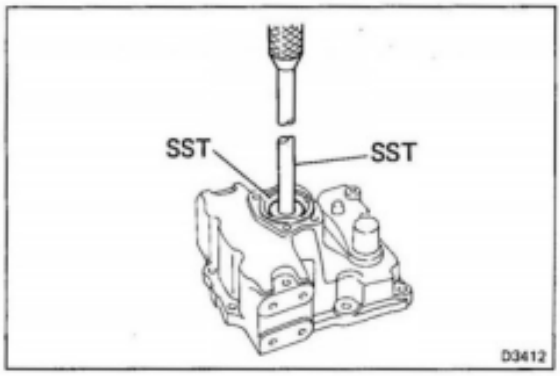

3. REMOVE OUTPUT SHAFT REAR BEARING

Using SST, press out the bearing from the extension housing.

SST 09350-36010 (09350-06050, 09350-06070)

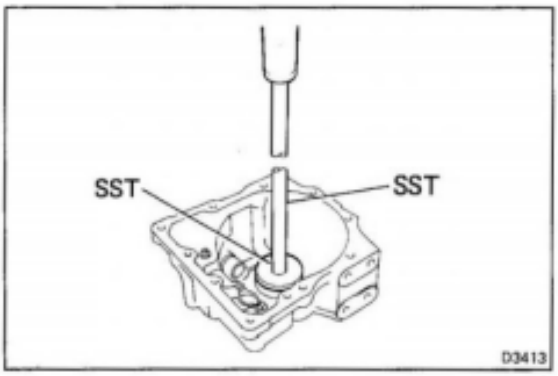

4. INSTALL OUTPUT SHAFT REAR BEARING

Using SST, press the bearing into the extension housing.

SST 09350-36010 (09350-06050, 09350-06080)

5. INSTALL SNAP RING

NOTE: Be sure the end gap of the snap ring is not aligned with one of the cutouts.

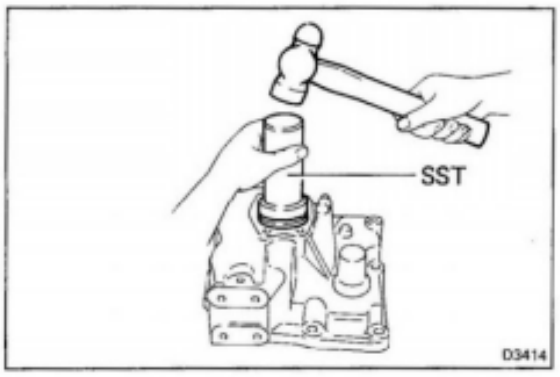

6. INSTALL NEW OIL SEAL

(a) Coat a new oil seal lip with MP grease.

(b) Using SST, drive in the oil seal.
The oil seal end should be flush with the outer edge of the extension housing.

SST 09350-36010 (09350-06040)

OIL PUMP

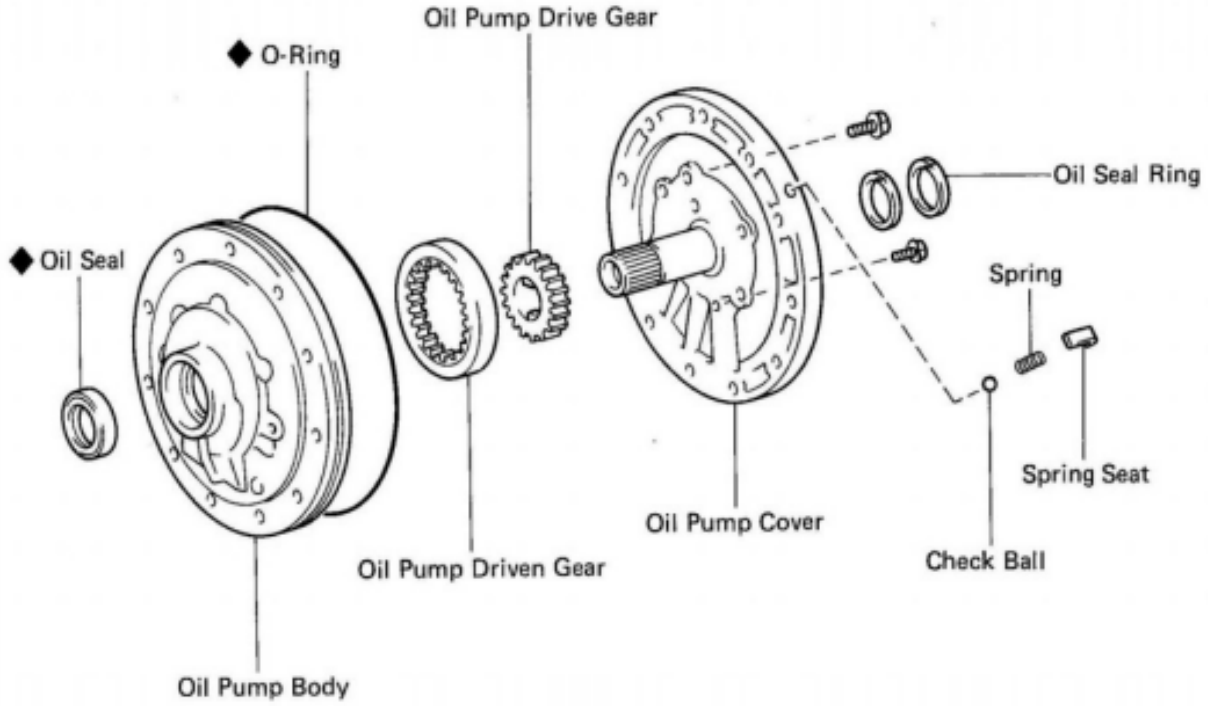

◆ Non-reusable part

D3422

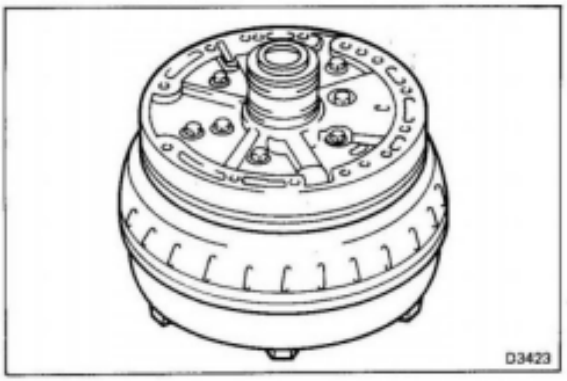

D3423

1. USE TORQUE CONVERTER AS WORK STAND
2. REMOVE O-RING

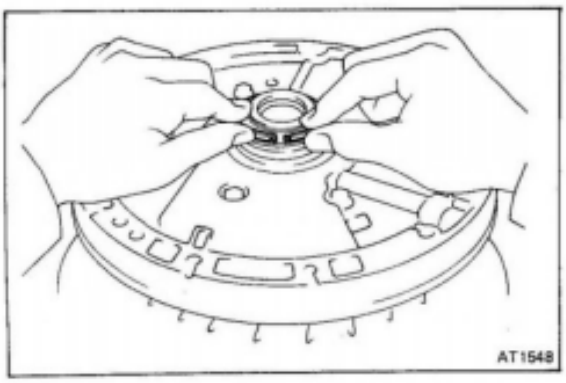

AT1548

3. REMOVE TWO OIL SEAL RINGS

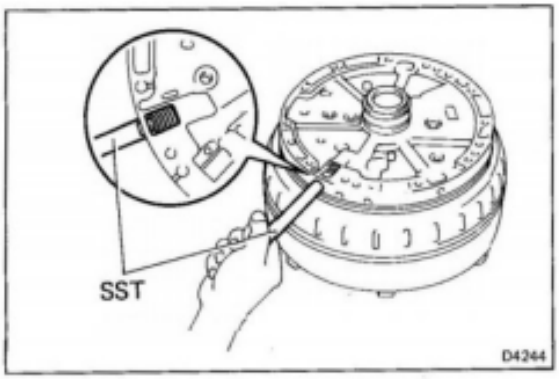

4. REMOVE CHECK BALL

(a) Using SST, compress the spring and remove the spring seat.

SST 09350-36010 (09350-06100)

(b) Remove the spring and check ball.

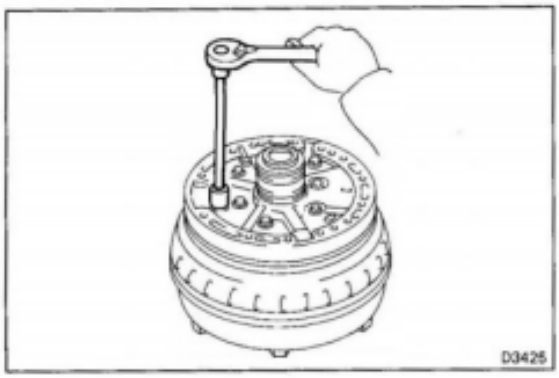

5. REMOVE OIL PUMP COVER

Remove the eight bolts, and then remove the oil pump cover from the oil pump body.

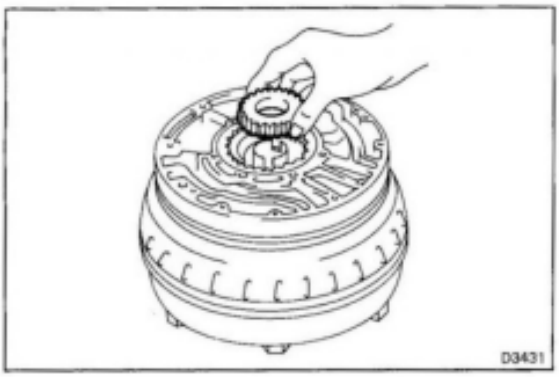

6. REMOVE OIL PUMP DRIVE GEAR AND DRIVEN GEAR

INSPECTION OF OIL PUMP

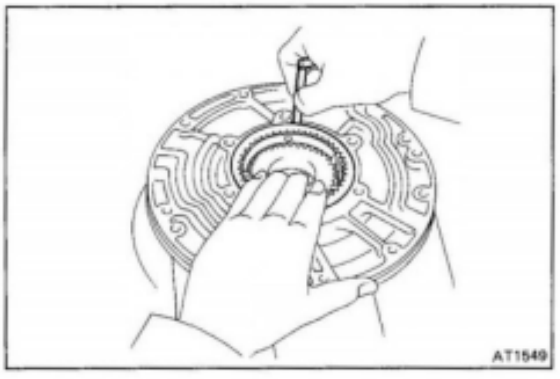

1. USE TORQUE CONVERTER AS WORK STAND

Place the torque converter and then place a wooden block, etc., on it.

2. CHECK BODY CLEARANCE OF DRIVEN GEAR

Push the driven gear to one side of the body.
Using a feeler gauge, measure the clearance.

Standard body clearance: **0.07 – 0.15 mm (0.0028 – 0.0059 in.)**
Maximum body clearance: **0.3 mm (0.012 in.)**

If the body clearance is greater than the maximum, replace the drive gear, driven gear or pump body.

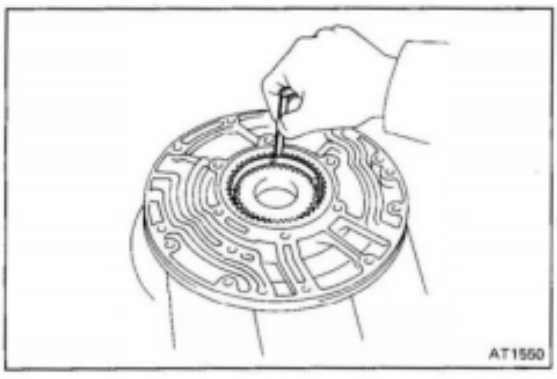

3. CHECK TIP CLEARANCE OF BOTH GEARS

Measure between the gear teeth and the cresent-shaped part of the pump body.

Standard tip clearance: **0.14 – 0.24 mm (0.0055 – 0.0094 in.)**
Maximum tip clearance: **0.3 mm (0.012 in.)**

If the tip clearance is greater than the maximum, replace the drive gear, driven gear or pump body.

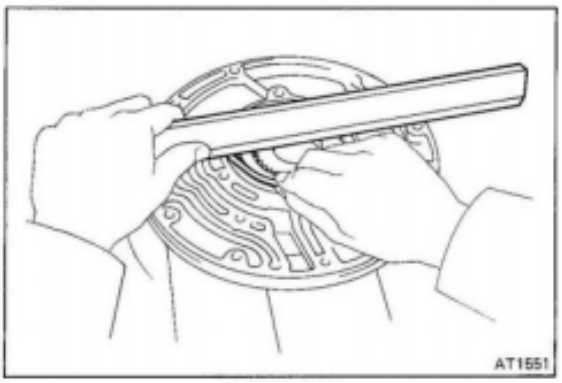

4. CHECK SIDE CLEARANCE OF BOTH GEARS

Using a steel straightedge and a feeler gauge, measure the side clearance of both gears.

Standard side clearance: **0.02 – 0.05 mm (0.0008 – 0.0020 in.)**
Maximum side clearance: **0.1 mm (0.004 in.)**

If the side clearance is greater than the maximum, replace the drive gear, driven gear or pump body.

There are two different thicknesses for drive and driven gears.

Drive and driven gear thickness:
18.435 – 18.450 mm (0.7258 – 0.7264 in.)
18.451 – 18.486 mm (0.7264 – 0.7278 in.)

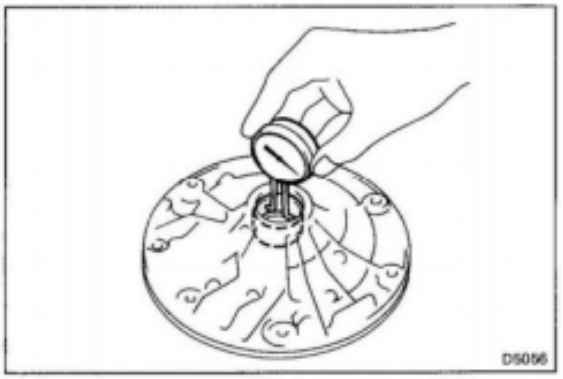

5. CHECK OIL PUMP BODY BUSHING

Using a dial indicator, measure the inside diameter of the oil pump body bushing.

Maximum inside diameter: **42.13 mm (1.6587 in.)**

If the inside diameter is greater than the maximum, replace the oil pump body.

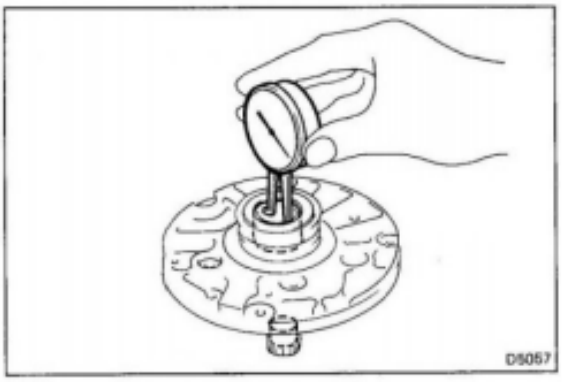

6. CHECK OIL PUMP COVER BUSHING

Using a dial indicator, measure the inside diameter, of the oil pump cover bushing.

Maximum inside diameter:

Front side	**24.07 mm**	**(0.9476 in.)**
Rear side	**26.57 mm**	**(1.0461 in.)**

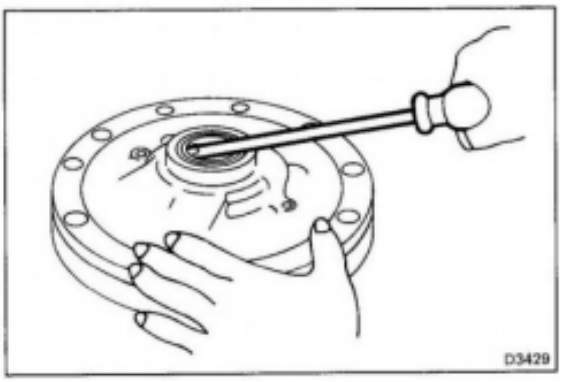

7. CHECK OIL SEAL

Check for wear, damage or cracks.

8. IF NECESSARY, REPLACE OIL SEAL

(a) Pry off the oil seal with a screwdriver.

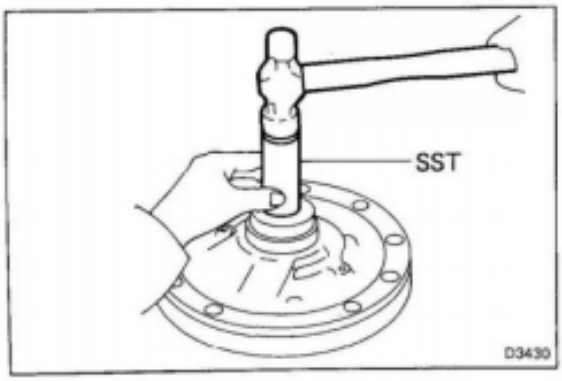

(b) Using SST, install a new oil seal.
The oil seal end should be flush with the outer edge of the pump body.

SST 09350-36010 (09350-06040)

(c) Coat the oil seal lip with MP grease.

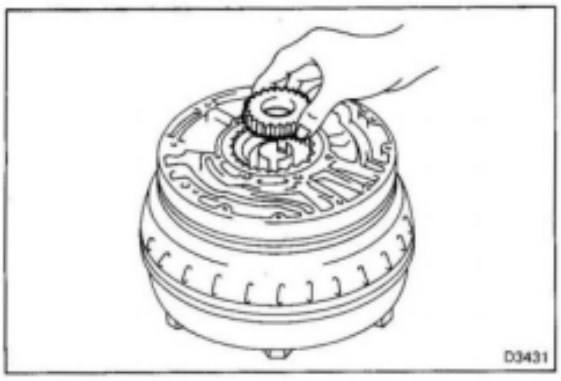

ASSEMBLY OF OIL PUMP

1. INSTALL OIL PUMP DRIVEN GEAR AND DRIVE GEAR

(a) Place the oil pump body on the torque converter.

(b) Coat the both gears with ATF.

(c) Install the driven gear and drive gear.

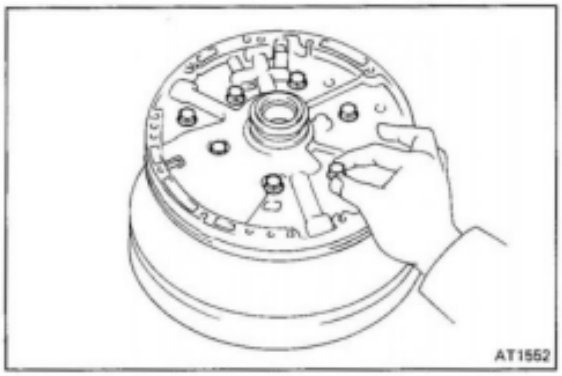

2. INSTALL OIL PUMP COVER

(a) Align the oil pump cover with the bolt holes and hand tighten the eight bolts.

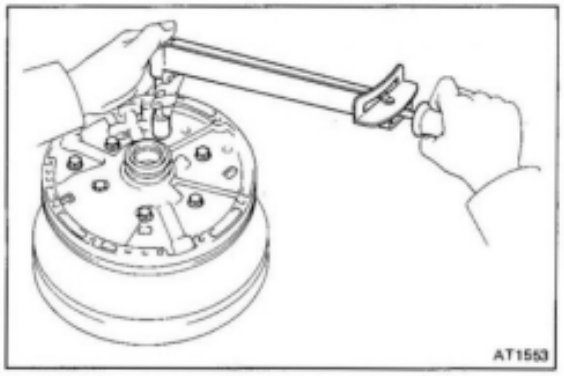

(b) Tighten the eight bolts.

Torque: 6 mm 90 kg-cm (78 in.-lb, 8.8 N·m)
8 mm 210 kg-cm (15 ft-lb, 21 N·m)

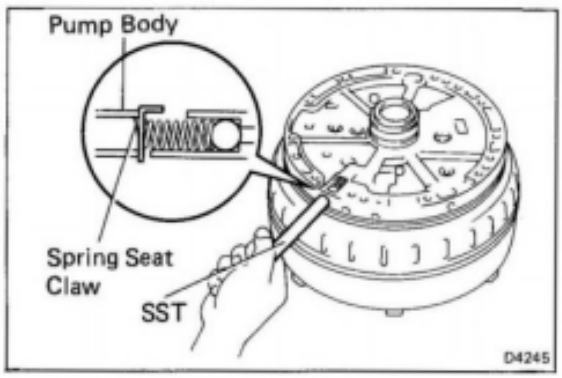

3. INSTALL CHECK BALL

(a) Install the check ball and spring.

(b) Using SST, compress the spring and install the spring seat.

SST 09350-36010 (09350-06100)

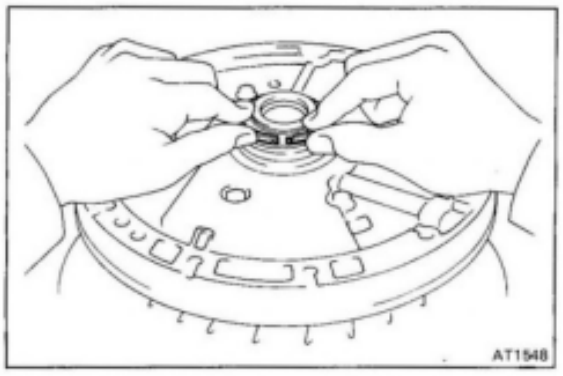

4. INSTALL TWO OIL SEAL RINGS

Coat the two oil seal rings with ATF and install.

CAUTION: Do not spread the ring ends more than necessary.

NOTE: After installing the oil seal rings, check that they move smoothly.

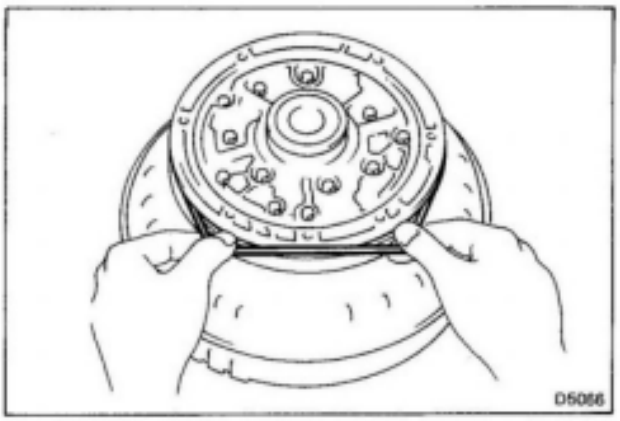

5. INSTALL O-RING

Coat new O-ring with ATF and install it to the oil pump body.

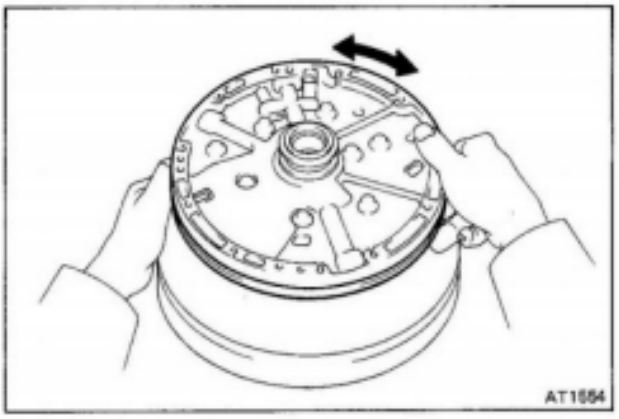

6. CHECK OIL PUMP DRIVE GEAR ROTATION

Make sure the drive gear rotates smoothly when installed to the torque converter.

OVERDRIVE PLANETARY GEAR AND OVERDRIVE DIRECT CLUTCH (Co)

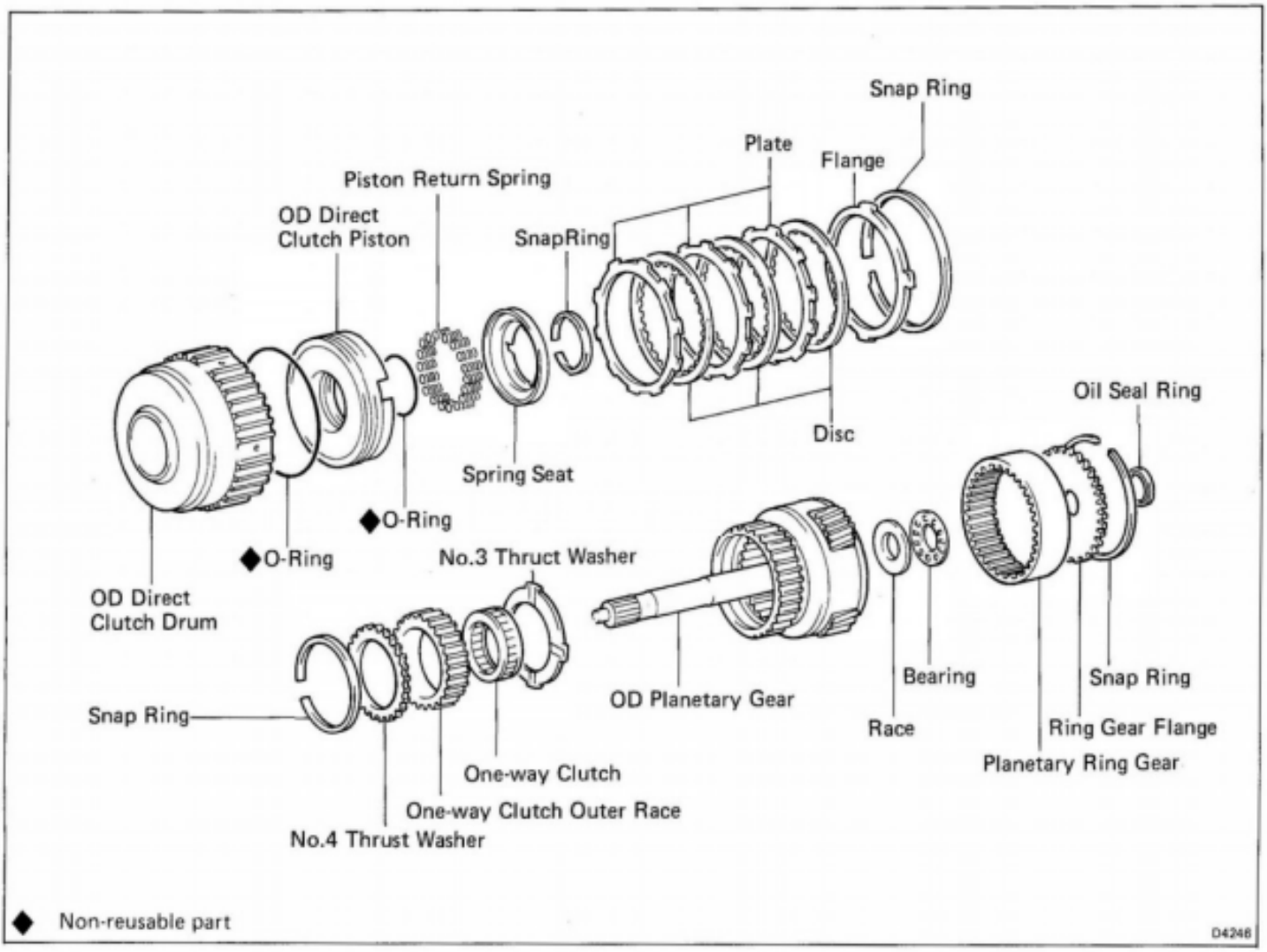

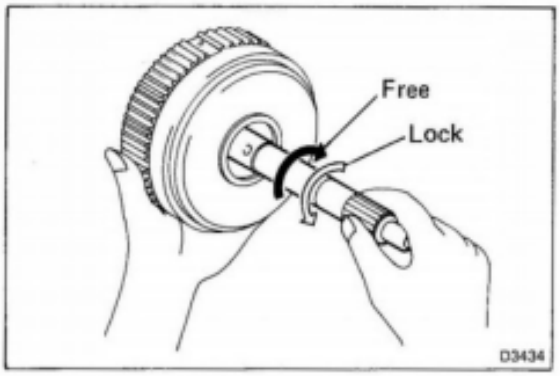

DISASSEMBLY OF OVERDRIVE PLANETARY GEAR AND OVERDRIVE DIRECT CLUTCH

1. CHECK OPERATION OF ONE-WAY CLUTCH

   Hold the OD direct clutch drum and turn the input shaft. The input shaft should turn freely clockwise and should lock counterclockwise.

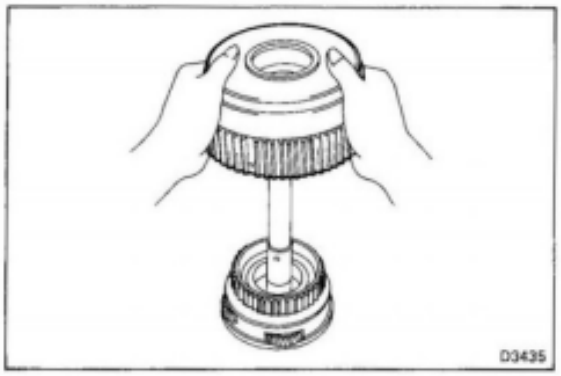

2. REMOVE OVERDRIVE DIRECT CLUTCH ASSEMBLY FROM OVERDRIVE PLANETARY GEAR

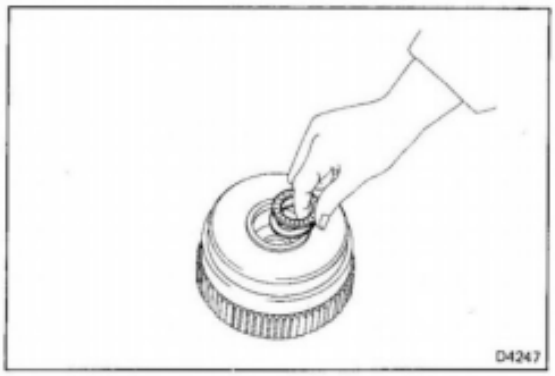

3. **REMOVE BEARING AND RACE FROM OVERDRIVE DIRECT CLUTCH**

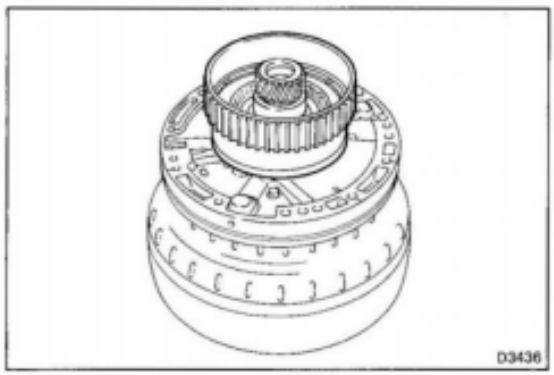

4. **CHECK PISTON STROKE OF OVERDRIVE DIRECT CLUTCH (C0)**

(a) Place the oil pump onto the torque converter. Then place the OD direct clutch onto the oil pump.

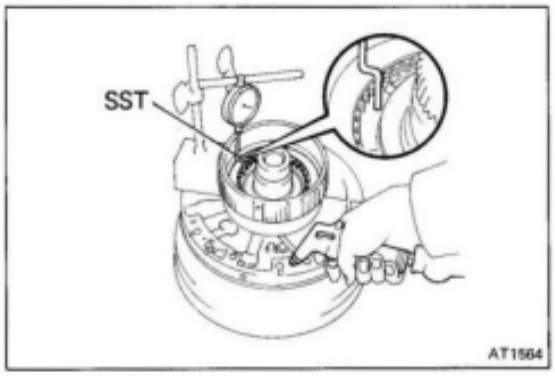

(b) Using SST and a dial indicator, measure the OD direct clutch piston stroke, applying and releasing the compressed air (4–8 kg/cm², 57–114 psi or 392–785 kPa) as shown.

SST 09350-36010 (09350–06110)

Piston stroke: 1.10 – 1.70 mm (0.0433 – 0.0669 in.)

If the stroke exceeds the limit, replace the discs and recheck the piston stroke. If the stroke is less than the limit, parts may be improperly assembled and require reassembly.

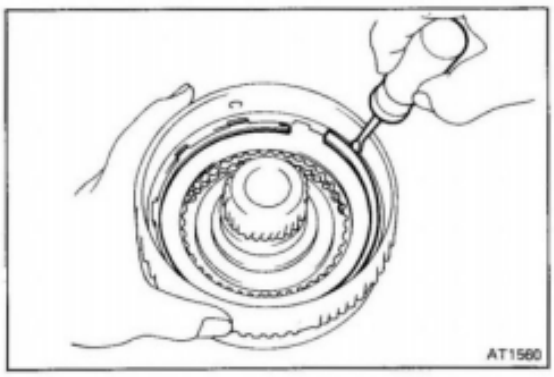

5. **REMOVE SNAP RING FROM OVERDRIVE DIRECT CLUTCH DRUM**

6. **REMOVE FLANGE, DISCS AND PLATES**

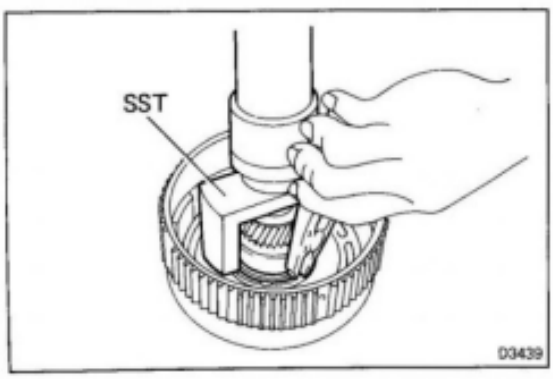

7. **COMPRESS PISTON RETURN SPRINGS AND REMOVE SNAP RING**

Place SST on the spring seat and compress the return spring with a shop press. Using snap ring pliers, remove the snap ring.

SST 09350-36010 (09350-06010)

8. **REMOVE SPRING SEAT AND TWENTY-FOUR RETURN SPRINGS**

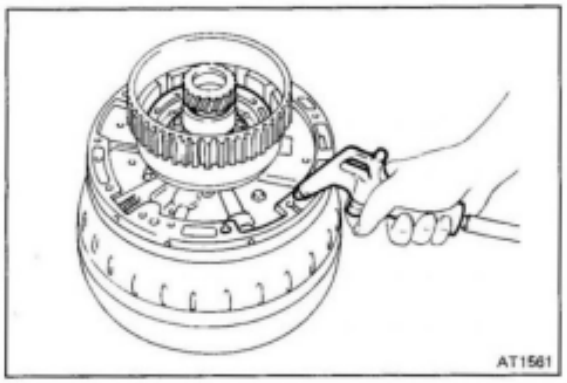
AT1561

9. REMOVE OVERDRIVE DIRECT CLUTCH PISTON

(a) Place the oil pump onto the torque converter. Then place the OD direct clutch onto the oil pump.

(b) Holding the OD direct clutch piston by hand, apply compressed air to the oil pump to remove the OD direct clutch piston.

(c) Remove the OD direct clutch piston.

10. REMOVE TWO O-RINGS FROM PISTON

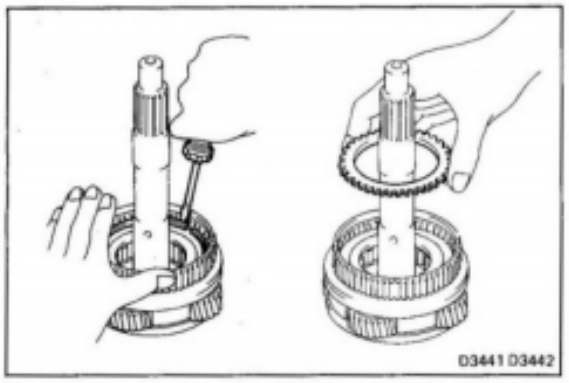
D3441 D3442

11. REMOVE ONE-WAY CLUTCH

(a) Remove the snap ring with a screwdriver.

(b) Remove the No. 4 thrust washer.

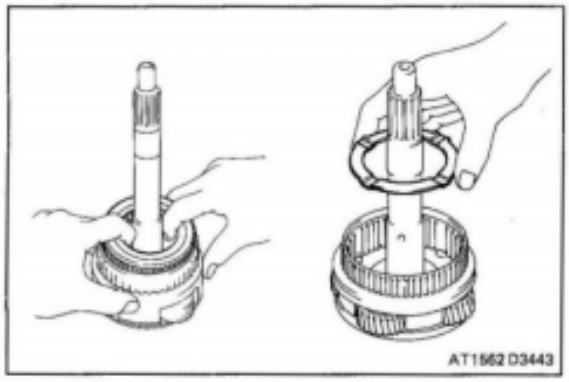
AT1562 D3443

(c) Remove the one-way clutch with outer race from the planetary gear.

(d) Remove the No. 3 thrust washer.

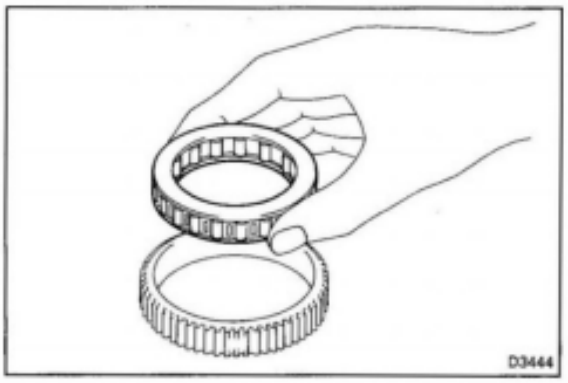
D3444

(e) Remove the one-way clutch from the one-way clutch outer race.

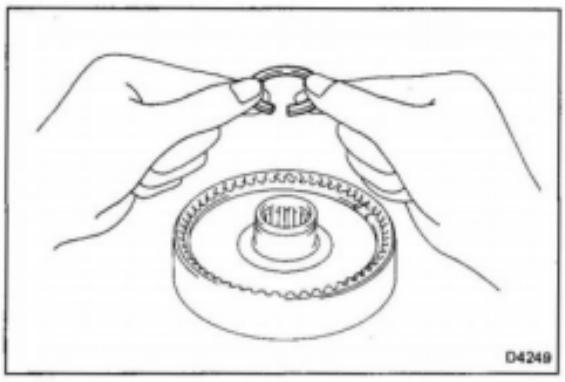
D4249

12. REMOVE OIL SEAL RING FROM RING GEAR FLANGE

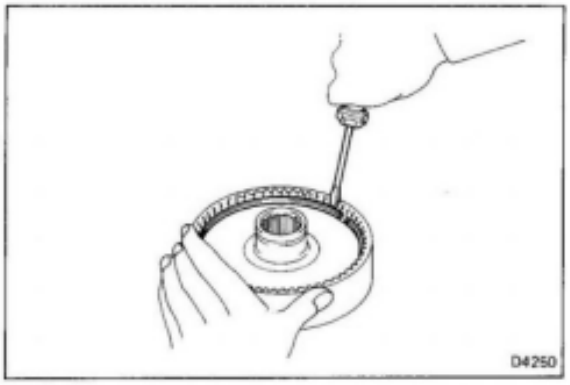

13. REMOVE SNAP RING AND RING GEAR FLANGE

(a) Remove the snap ring with a screwdriver.

(b) Remove the ring gear flange.

INSPECTION OF OVERDRIVE PLANETARY GEAR AND OVERDRIVE DIRECT CLUTCH

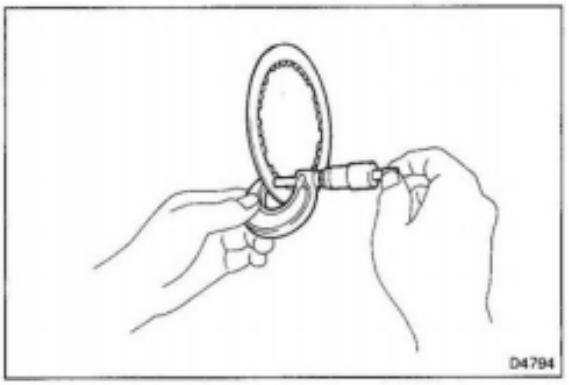

1. CHECK DISCS

Using a micrometer, measure the thickness of the discs.

Minimum thickness: 1.9 mm (0.075 in.)

If the thickness is less than the minimum, replace the disc.

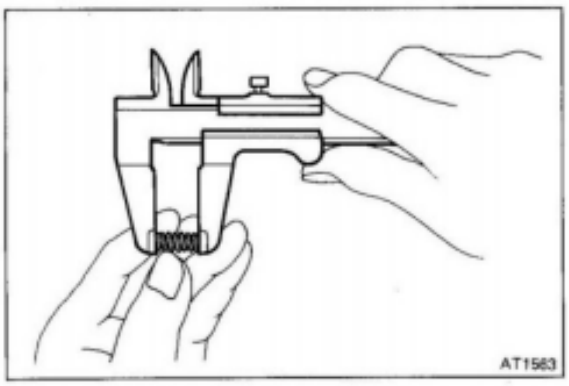

2. CHECK PISTON RETURN SPRINGS

Using calipers, measure the free length of the return springs.

Standard length: 21.0 mm (0.827 in.)

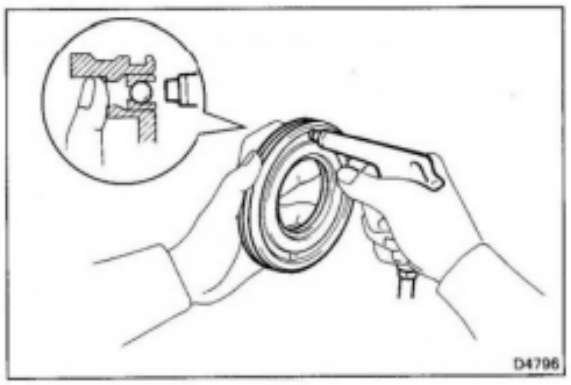

3. CHECK OVERDRIVE DIRECT CLUTCH PISTON

(a) Check that check ball is free by shaking the piston.

(b) Check that the valve does not leak by applying low-pressure compressed air.

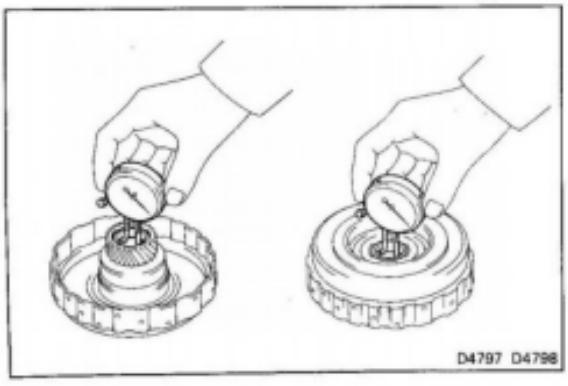

4. CHECK OVERDRIVE DIRECT CLUTCH DRUM BUSHING

Using a dial indicator, measure the inside diameter of the clutch drum bushings.

Maximum inside diameter: 26.57 mm (1.0461 in.)

If the inside diameter is greater than the maximum, replace the clutch drum.

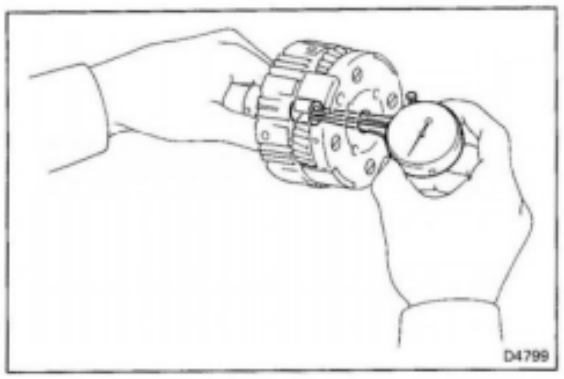

5. CHECK OVERDRIVE PLANETARY GEAR BUSHING

Using a dial indicator, measure the inside diameter of the planetary gear bushing.

Maximum inside diameter: 12.07 mm (0.4752 in.)

If the inside diameter is greater than the maximum, replace the planetary gear.

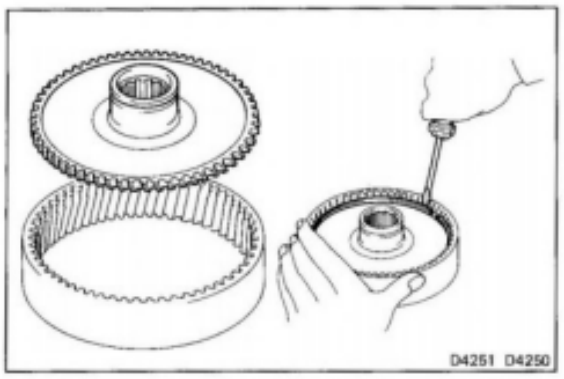

ASSEMBLY OF OVERDRIVE PLANETARY GEAR AND OVERDRIVE DIRECT CLUTCH

1. INSTALL RING GEAR FLANGE

(a) Install the ring gear flange to the ring gear.

(b) Install the snap ring to the ring gear.

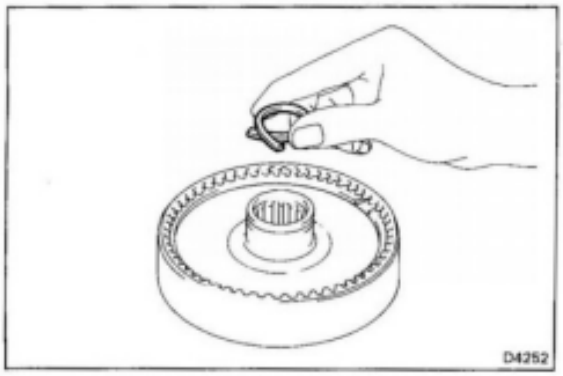

2. INSTALL OIL SEAL RING

Coat the oil seal ring with ATF and install it to the ring gear flange.

CAUTION: Do not spread the ring ends more than necessary.

NOTE: After installing the oil seal ring, check that it moves smoothly.

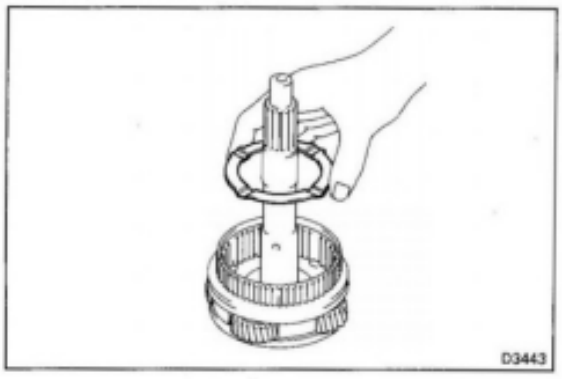

3. INSTALL ONE-WAY CLUTCH

(a) Install the No. 3 thrust washer to the planetary gear, facing the grooved side upward.

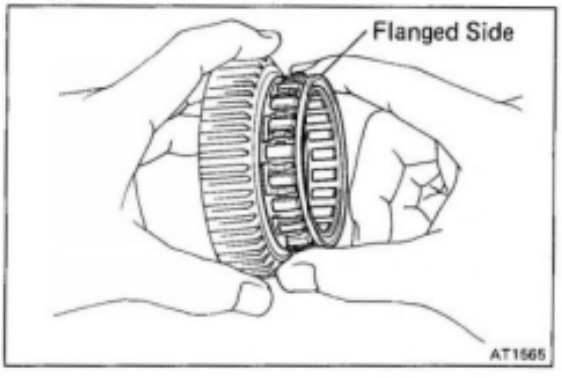

(b) Install the one-way clutch into the outer race, facing the flanged side of the one-way clutch upward.

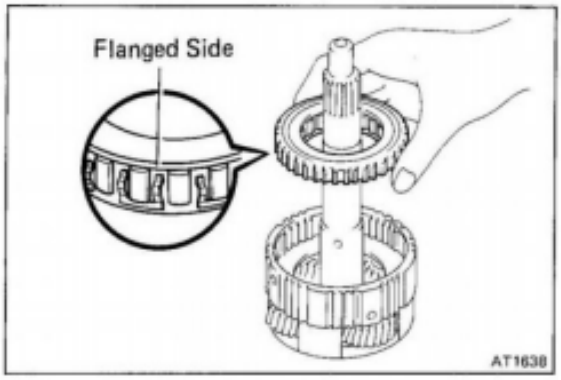

(c) Install the assembled one-way clutch and outer race to the planetary gear.

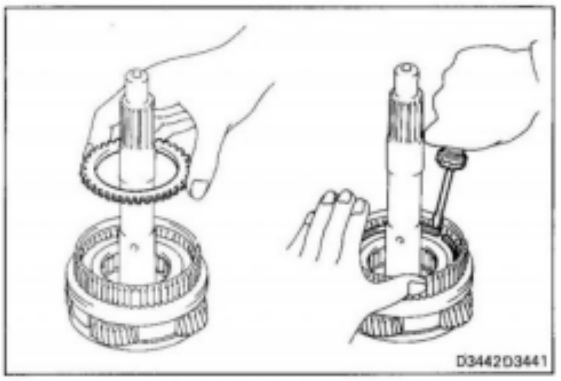

(d) Install the No. 4 thrust washer to the planetary gear.

(e) Install the snap ring to the planetary gear.

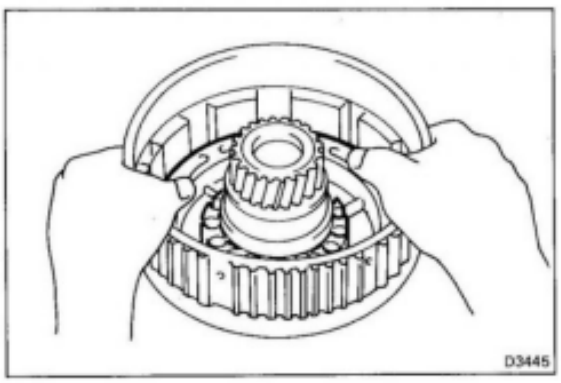

4. INSTALL NEW O-RINGS ON OVERDRIVE DIRECT CLUTCH PISTON

Coat new O-rings with ATF and install them on the OD direct clutch piston.

5. INSTALL OVERDRIVE DIRECT CLUTCH PISTON TO OVERDRIVE DIRECT CLUTCH DRUM

Being careful not to damage the O-rings, press the direct clutch piston into the clutch drum with both hands.

6. INSTALL TWENTY-FOUR PISTON RETURN SPRINGS AND SPRING SEAT

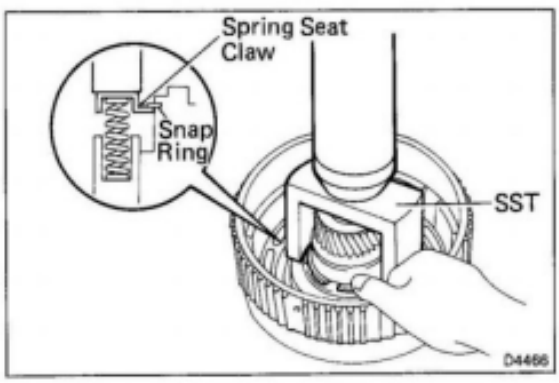

7. COMPRESS PISTON RETURN SPRINGS AND INSTALL SNAP RING IN GROOVE

(a) Place SST on the spring seat and compress the return springs with a shop press.

SST 09350-36010 (09350-06010)

(b) Install the snap ring. Be sure the end gap of the snap ring is not aligned with the spring seat claw.

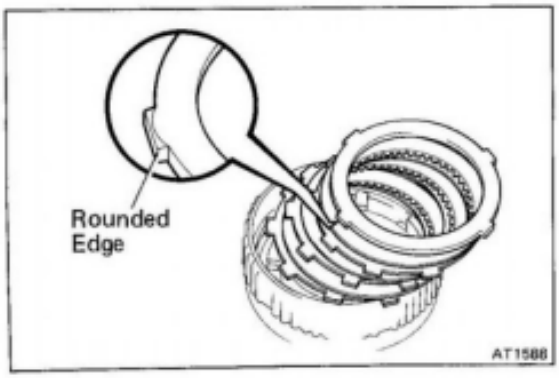

8. INSTALL PLATES, DISCS AND FLANGE

(a) Install in order: P–D–P–D–P–D

(b) Install the flange, facing the rounded edge downward.

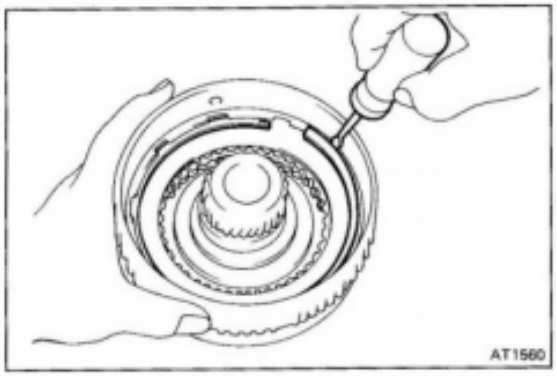

9. INSTALL SNAP RING

NOTE: Be sure the end gap of the snap ring is not aligned the cutout portion of the clutch drum.

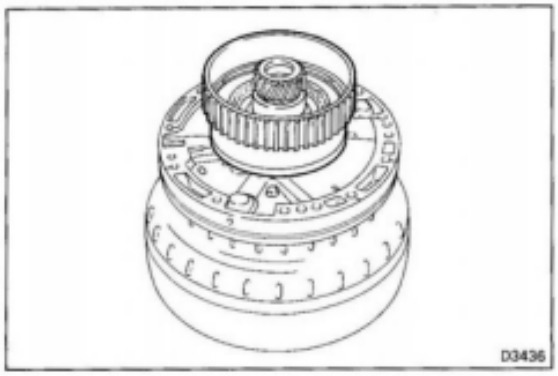

10. CHECK PISTON STROKE OF OVERDRIVE DIRECT CLUTCH (C_0)

(a) Place the oil pump onto the torque converter, and then place the OD direct clutch assembly onto the oil pump.

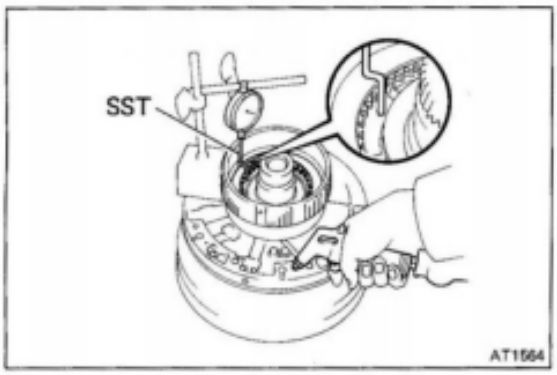

(b) Using SST and a dial indicator, measure the OD direct clutch piston stroke, applying and releasing the compressed air (4–8 kg/cm², 57–114 psi or 392–785 kPa) as shown.

SST 09350-36010 (09350-06110)

Piston stroke: 1.10 – 1.70 mm (0.0433 –0.0669 in.)

If the stroke exceeds the limit, replace the discs and recheck the piston stroke. If the stroke is less than the limit, parts may be improperly assembled and require reassembly.

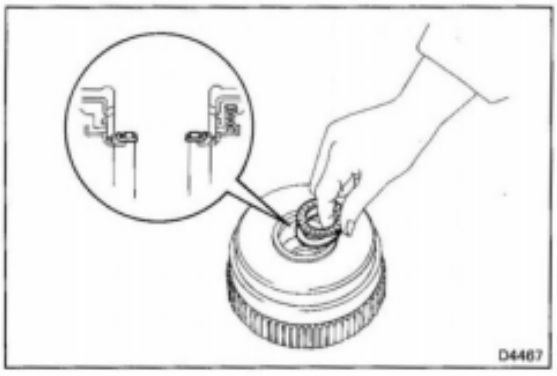

11. INSTALL RACE AND BEARING

Coat the race and bearing with petroleum jelly and install them onto the OD direct clutch.

NOTE: Race and bearing diameter mm (in.)

	Inside	Outside
Race	28.5 (1.122)	48.0 (1.890)
Bearing	28.5 (1.122)	46.2 (1.819)

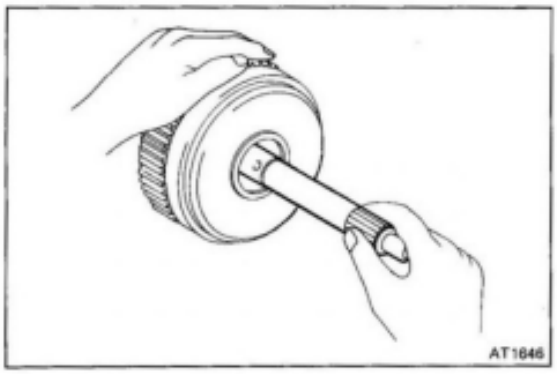

12. INSTALL OVERDRIVE DIRECT CLUTCH

While pulling and turning the input shaft clockwise install the OD direct clutch assembly to the OD planetary gear.

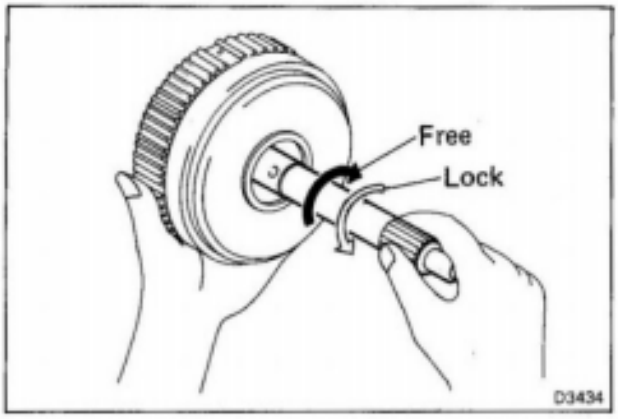

13. CHECK OPERATION OF ONE-WAY CLUTCH

Hold the OD direct clutch drum and turn the input shaft. The input shaft should freely turn clockwise and lock counterclockwise.

OVERDRIVE SUPPORT

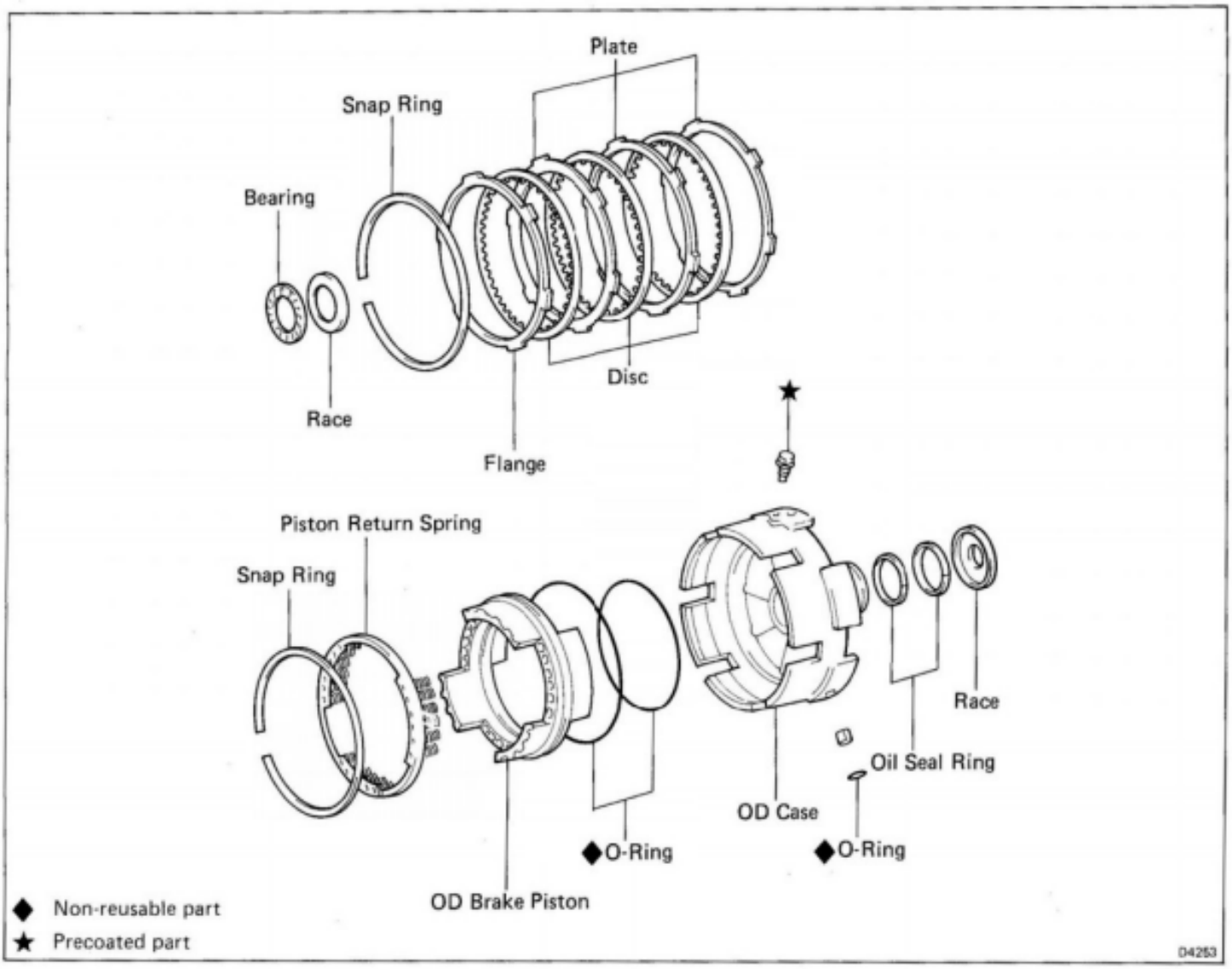

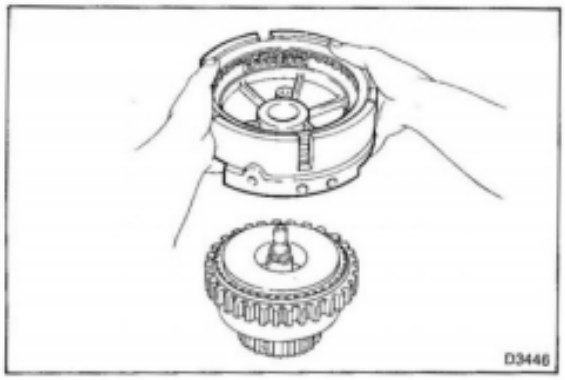

DISASSEMBLY OF OVERDRIVE SUPPORT

1. CHECK PISTON STROKE OF OVERDRIVE BRAKE (B_0)

(a) Place the OD case onto the front clutch.

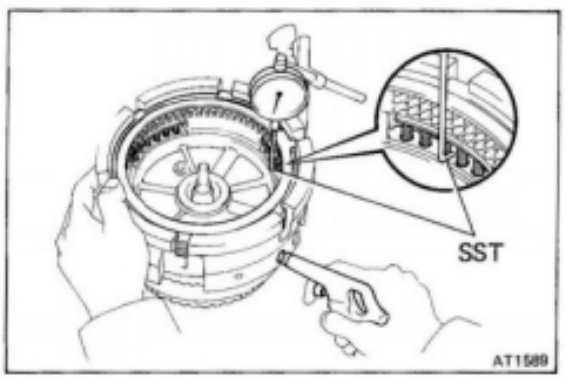

(b) Using SST and a dial indicator, measure the OD brake piston stroke, applying and releasing the compressed air (4–8 kg/cm², 57–114 psi or 392–785 kPa) as shown.

SST 09350-36010 (09350-06120)

Piston stroke: 1.25 – 1.85 mm (0.0492 – 0.0728 in.)

If the piston stroke exceeds the limit, replace the discs and recheck the piston stroke.

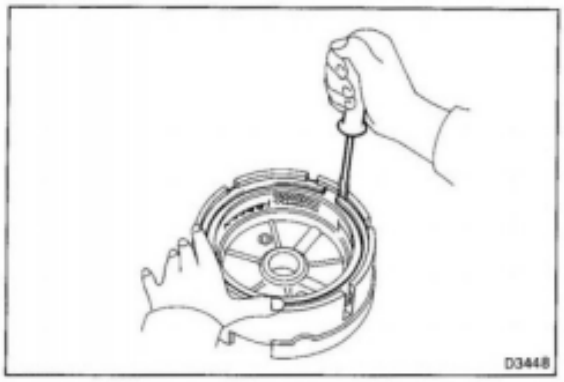

2. REMOVE SNAP RING, FLANGE, DISCS AND PLATES

(a) Remove the snap ring with a screwdriver.

(b) Remove the flange, discs and plates.

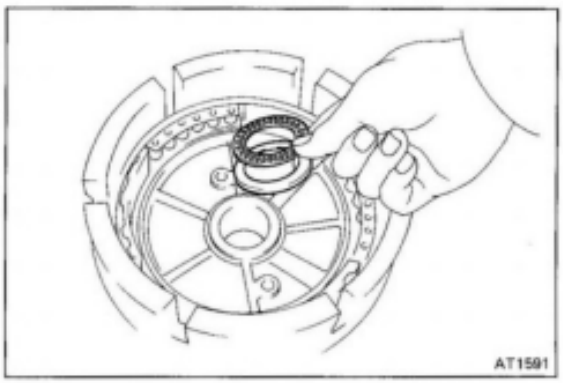

3. REMOVE BEARING AND RACE

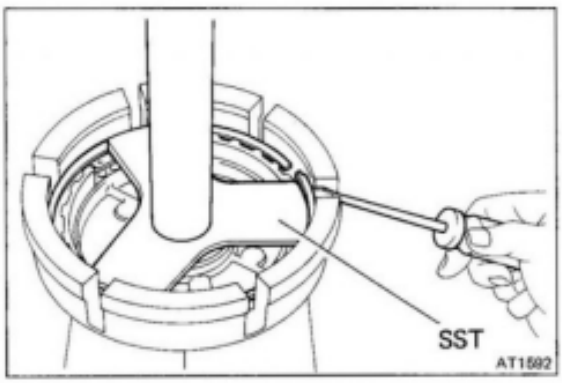

4. COMPRESS PISTON RETURN SPRING AND REMOVE SNAP RING

(a) Place SST on the spring retainer, and compress the return spring with a shop press.

SST 09350-36010 (09350-06020)

(b) Remove the snap ring with a screwdriver.

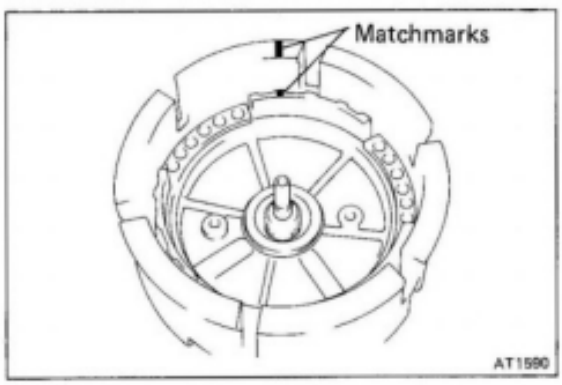

5. REMOVE OVERDRIVE BRAKE PISTON

(a) Place the matchmarks on the OD brake piston and OD case.

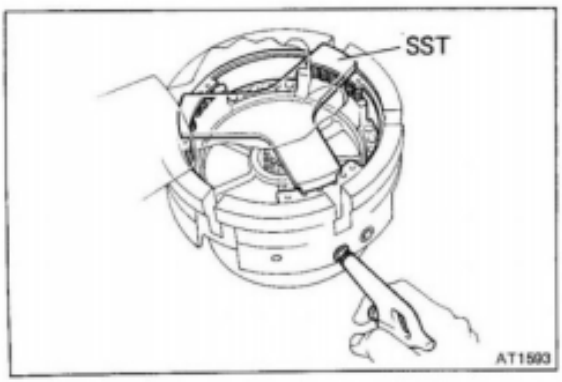

(b) Place the return spring on the OD brake piston and then place SST on the return spring.

(c) Hold SST so it is not slanted and apply compressed air into the passage to remove the OD brake piston.

SST 09350-36010 (09350-06020)

(d) Remove the OD brake piston.

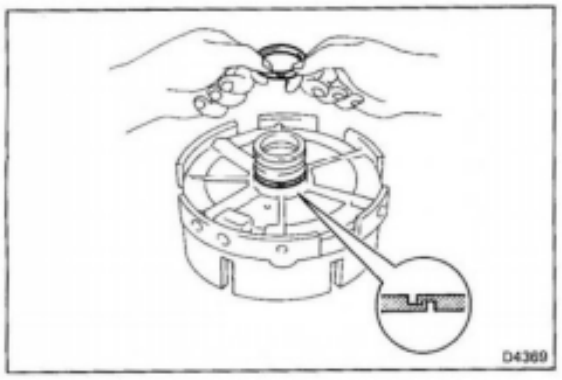

6. REMOVE TWO OIL SEAL RINGS

7. REMOVE THREE O-RINGS FROM OVERDRIVE CASE

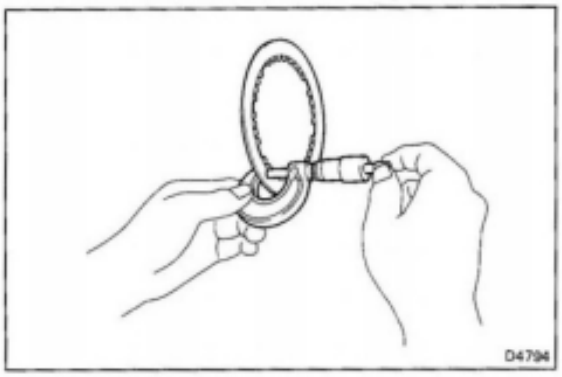

INSPECTION OF OVERDRIVE SUPPORT

1. CHECK DISCS

Using a micrometer, measure the thickness of the discs.

Minimum thickness: 1.9 mm (0.075 in.)

If the thickness is less than the minimum, replace the disc.

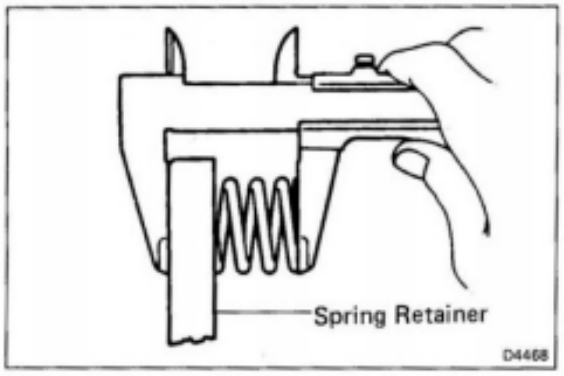

2. CHECK PISTON RETURN SPRING

Using calipers, measure the free length of the return spring.

Standard length: 22.75 mm (0.8957 in.)

ASSEMBLY OF OVERDRIVE SUPPORT

1. INSTALL TWO OIL SEAL RINGS

Coat the oil seal rings with ATF, contract them and install them onto the OD case.

CAUTION: Do not spread the ring ends too much.

NOTE: After installing the oil seal rings, check that they move smoothly.

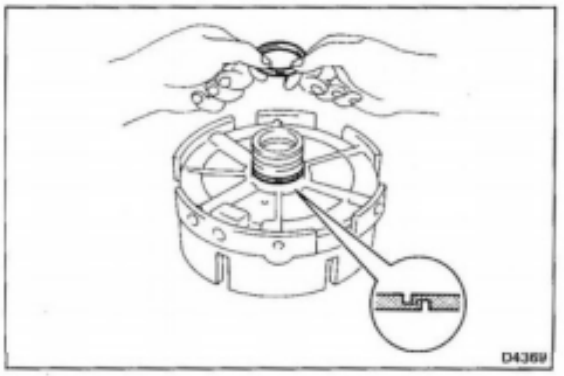

2. INSTALL THREE NEW O-RINGS TO OVERDRIVE CASE

Coat new O-rings with ATF and install them to the OD case.

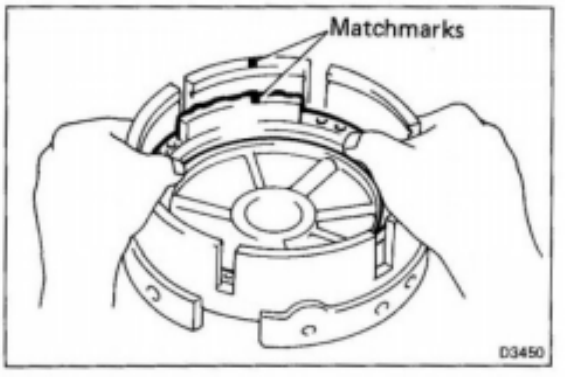

3. INSTALL NEW O-RINGS ON OVERDRIVE BRAKE PISTON

Coat new O-rings with ATF and install them on the OD brake piston.

4. INSTALL OVERDRIVE BRAKE PISTON

(a) Align the matchmarks on the piston and OD case.

(b) Being careful not to damage the O-rings, press in the brake piston into the OD case with both hands.

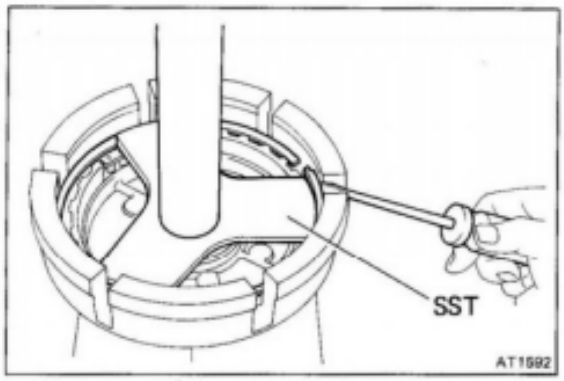

5. **INSTALL PISTON RETURN SPRING**

6. **COMPRESS PISTON RETURN SPRING AND INSTALL SNAP RING IN GROOVE**

(a) Place SST on the spring retainer, and compress the return spring with a shop press.

SST 09350-36010 (09350-06020)

(b) Install the snap ring with a screwdriver. Be sure the end gap of the snap ring is not aligned with the cut-out portion of the OD case.

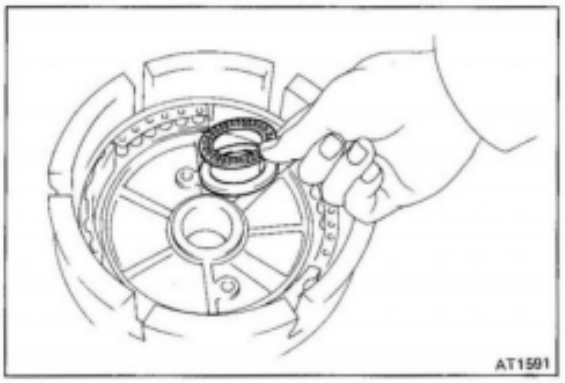

7. **INSTALL RACE AND BEARING**

Coat the race and bearing with petroleum jelly and install them onto the OD case.

NOTE: Race and bearing diameter mm (in.)

	Inside	Outside
Race	37.0 (1.457)	52.0 (2.047)
Bearing	34.7 (1.366)	52.0 (2.047)

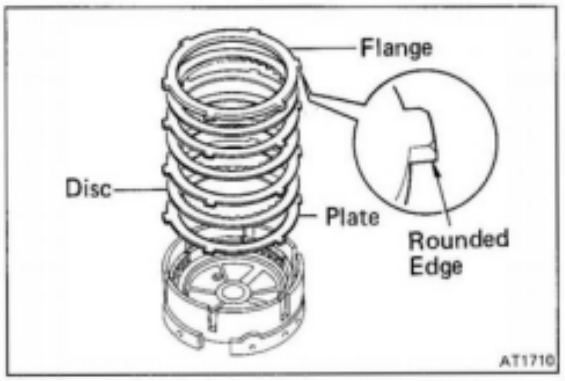

8. **INSTALL PLATES, DISCS AND FLANGE**

(a) Install in order: P–D–P–D–P–D

(b) Install the flange, facing the rounded edge downward.

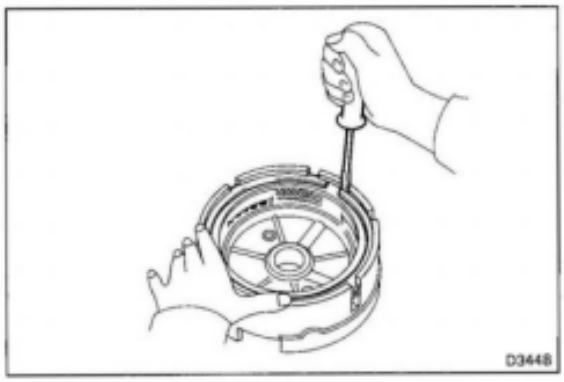

9. **INSTALL SNAP RING**

NOTE: Be sure the end gap of the snap ring is not aligned the cutout portion of the OD case.

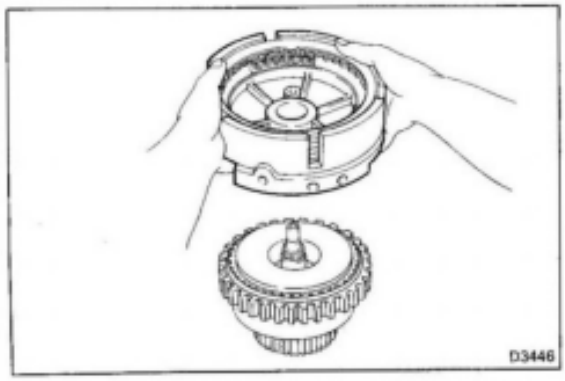

10. **CHECK PISTON STROKE OF OVERDRIVE BRAKE (B_0)**

(a) Place the OD case onto the front clutch.

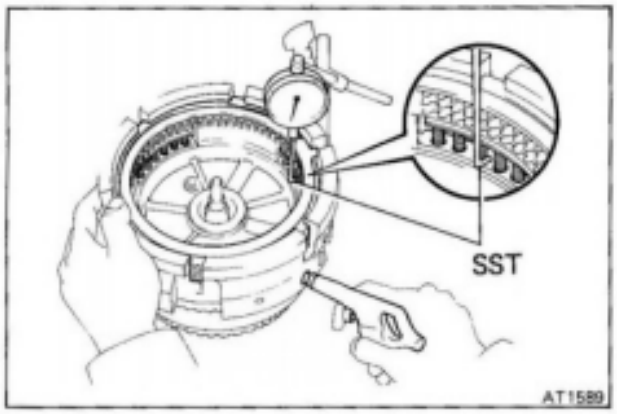

(b) Using SST and a dial indicator, measure the OD brake piston stroke, applying and releasing the compressed air (4–8 kg/cm², 57–114 psi or 392–785 kPa) as shown.

SST 09350-36010 (09350-06120)

Piston stroke: 1.25 – 1.85 mm (0.0492 – 0.0728 in.)

If the piston stroke exceeds the limit, replace the discs and recheck the piston stroke.

If the stroke is less than the limit, parts may be improperly assembled and require reassembly.

FRONT CLUTCH (C_1)

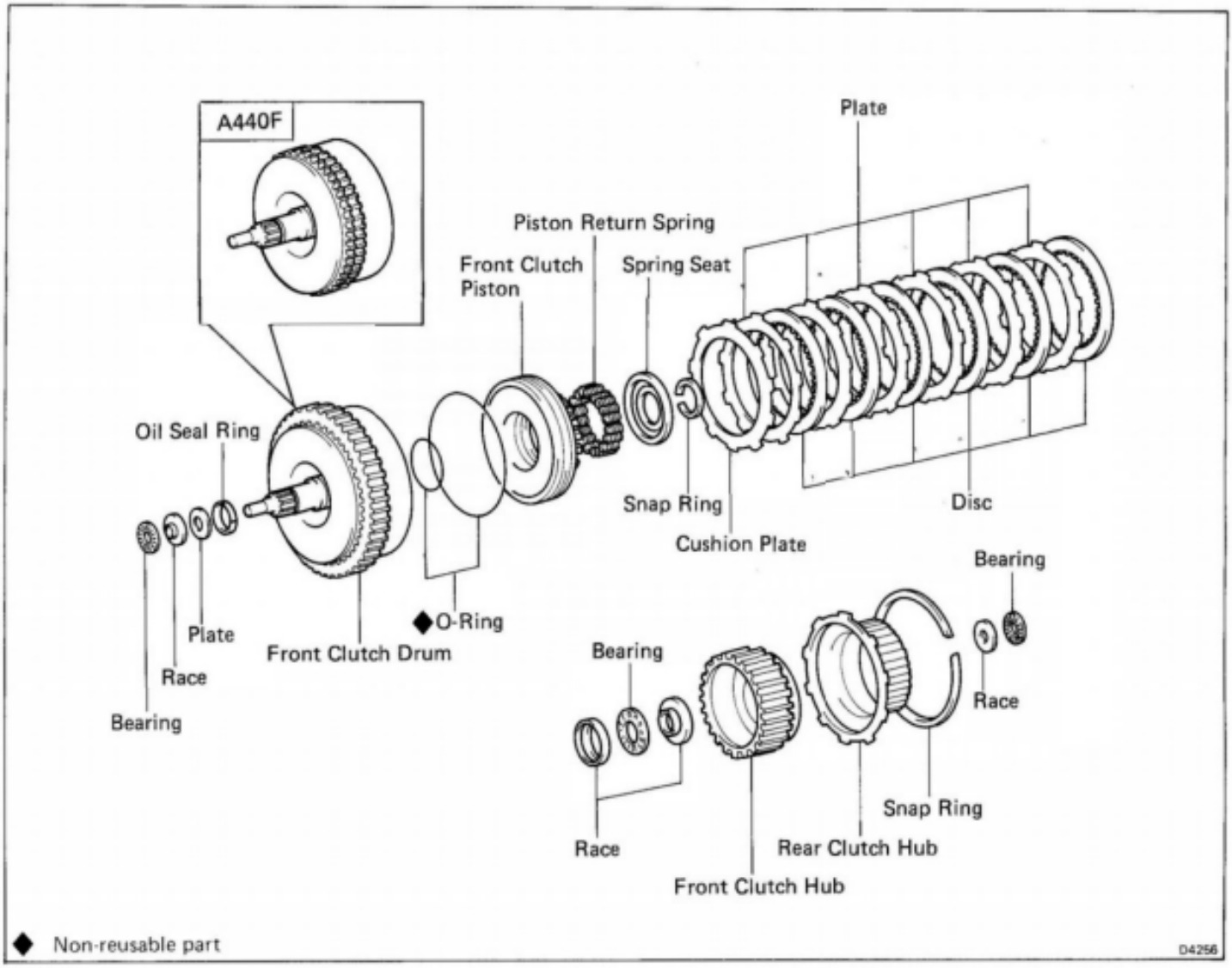

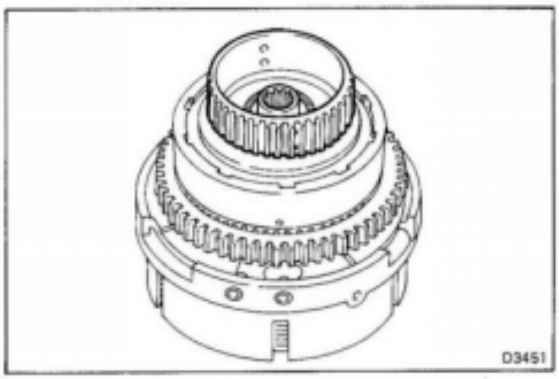

DISASSEMBLY OF FRONT CLUTCH

1. PLACE FRONT CLUTCH ASSEMBLY ONTO OVER-DRIVE CASE

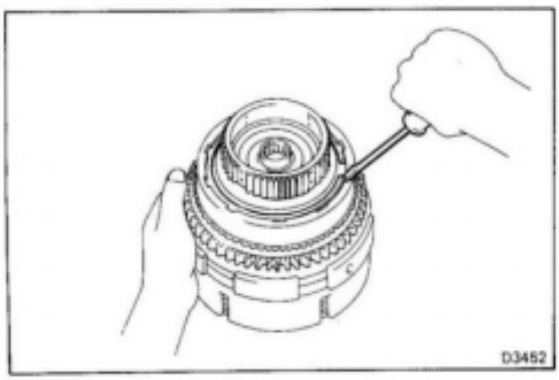

2. REMOVE REAR CLUTCH HUB
   (a) Remove the snap ring with a screwdriver.
   (b) Remove the rear clutch hub from the front clutch drum.

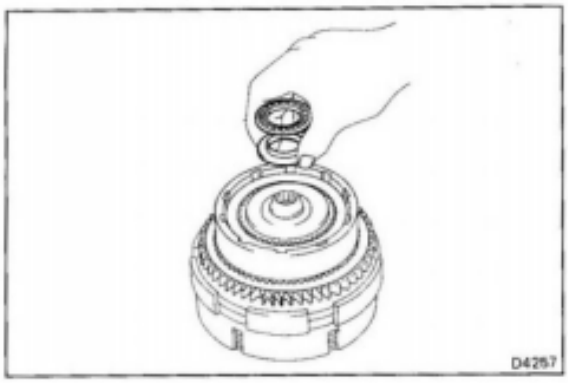

3. REMOVE BEARING AND RACE

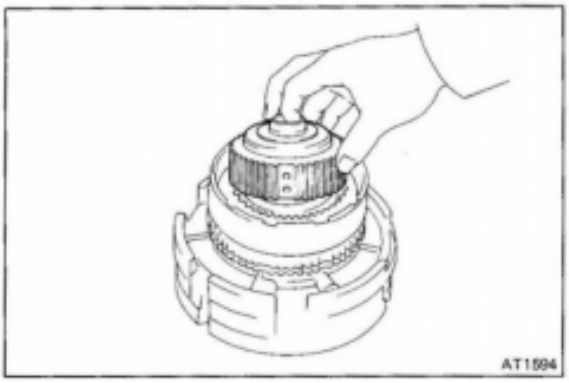

4. REMOVE FRONT CLUTCH HUB FROM FRONT CLUTCH DRUM

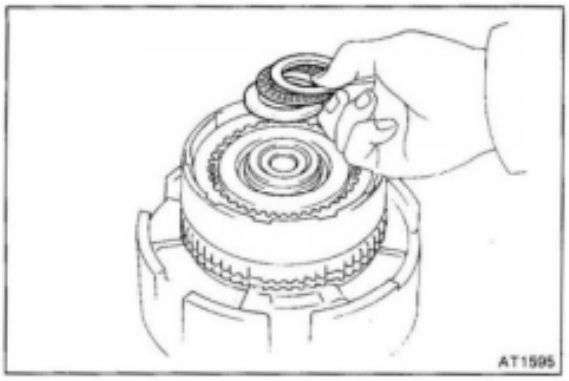

5. REMOVE RACES AND BEARING FROM FRONT CLUTCH DRUM

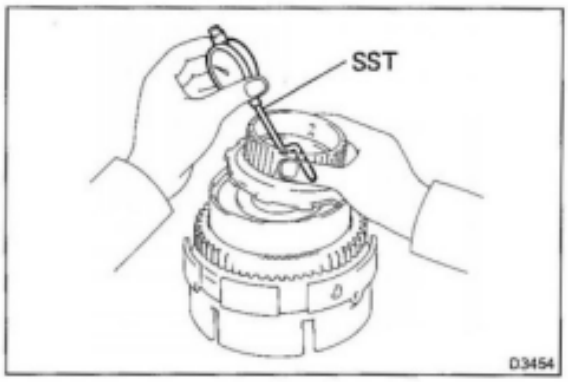

6. CHECK PISTON STROKE OF FRONT CLUTCH (C_1)

(a) Lift up the rear clutch hub and place the assembled SST and dial indicator.

SST 09350-36010 (09350-06110)

(b) Install the rear clutch hub and snap ring.

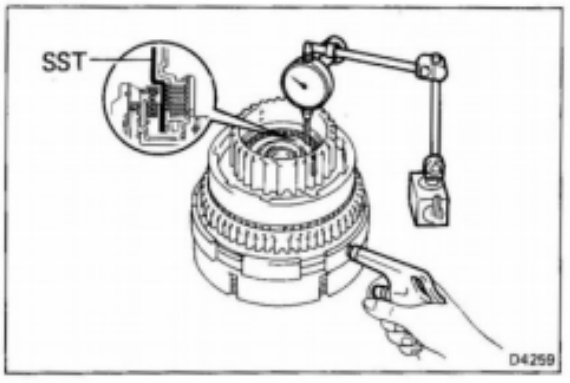

(c) Using SST and a dial indicator, measure the front clutch piston stroke, applying and releasing the compressed air (4–8 kg/cm², 57–114 psi or 392–785 kPa) as shown.

SST 09350-36010 (09350-06110)

Piston stroke: 3.93 – 4.23 mm (0.1547 – 0.1665 in.)

If the piston stroke exceeds the limit, replace the discs and recheck the piston stroke.

If the piston stroke is nonstandard, select another plate.

NOTE: There are four plates.

mm (in.)

Thickness	
1.8 (0.071)	2.2 (0.0866)
2.0 (0.079)	2.4 (0.0945)

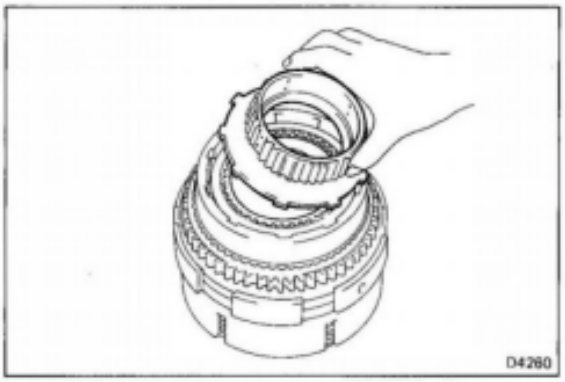

7. REMOVE REAR CLUTCH HUB, DISCS, PLATES AND CUSHION PLATE

(a) Remove the snap ring with a screwdriver.

(b) Remove the rear clutch hub, discs and plates.

(c) Remove the cushion plate.

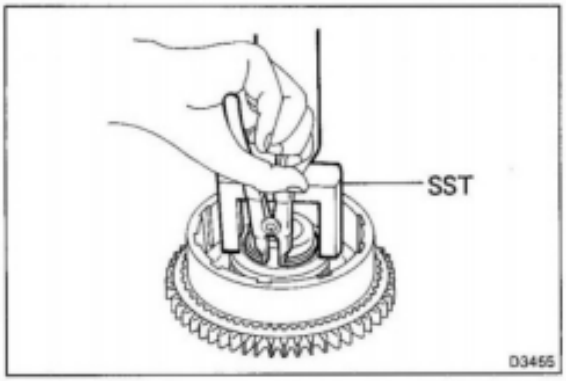

8. COMPRESS PISTON RETURN SPRINGS AND REMOVE SNAP RING

(a) Place SST on the spring seat, and compress the return springs with a shop press.

SST 09350-36010 (09350-06010)

(b) Remove the snap ring with snap ring pliers.

9. REMOVE SPRING SEAT AND TWENTY-TWO RETURN SPRINGS

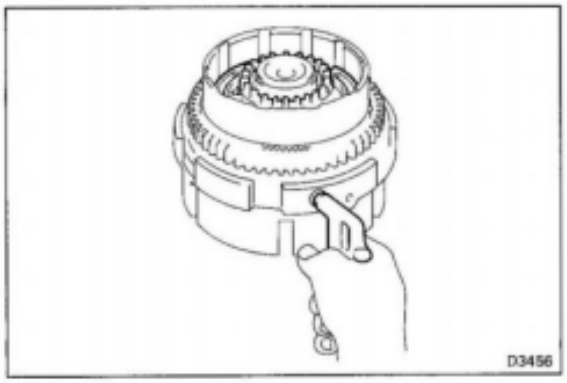

10. REMOVE FRONT CLUTCH PISTON

(a) Holding the front clutch piston so it is not slanted, apply compressed air into the passage to remove the front clutch piston.

(b) Remove the front clutch piston.

11. REMOVE O-RINGS FROM FRONT CLUTCH PISTON

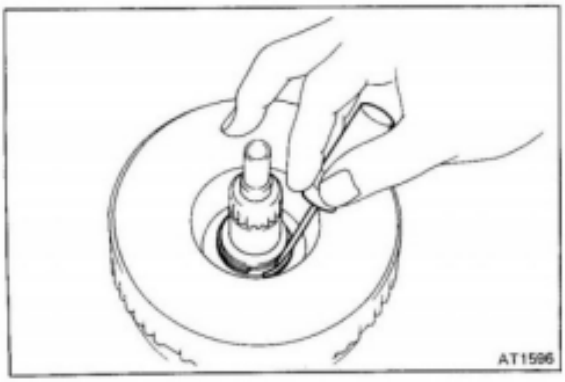

12. REMOVE OIL SEAL RING WITH SCREWDRIVER

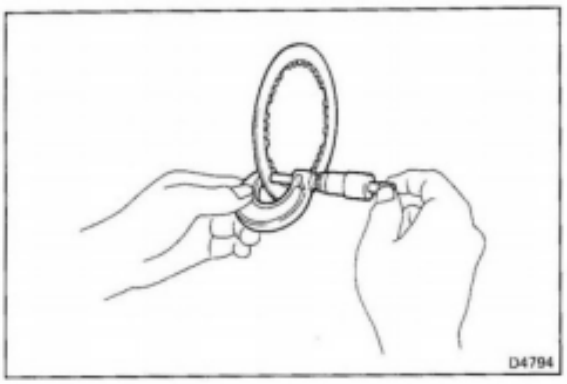

INSPECTION OF FRONT CLUTCH

1. CHECK DISCS

Using a micrometer, measure the thickness of the discs.

Minimum thickness: 1.9 mm (0.075 in.)

If the thickness is less than the minimum, replace the disc.

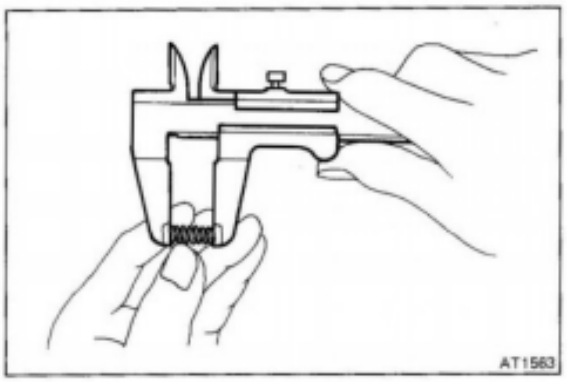

2. CHECK PISTON RETURN SPRINGS

Using calipers, measure the free length of the return springs.

Standard length: 30.5 mm (1.201 in.)

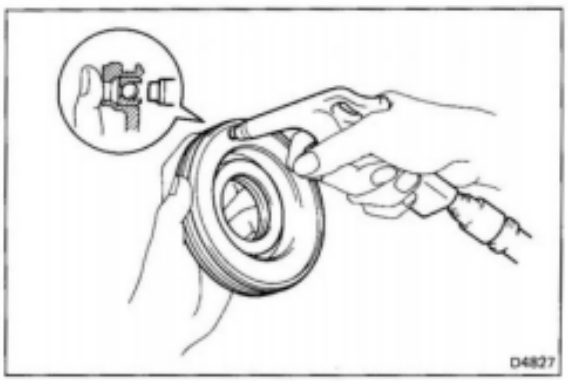

3. CHECK FRONT CLUTCH PISTON

(a) Check that check ball is free by shaking the piston.

(b) Check that the valve does not leak by applying low-pressure compressed air.

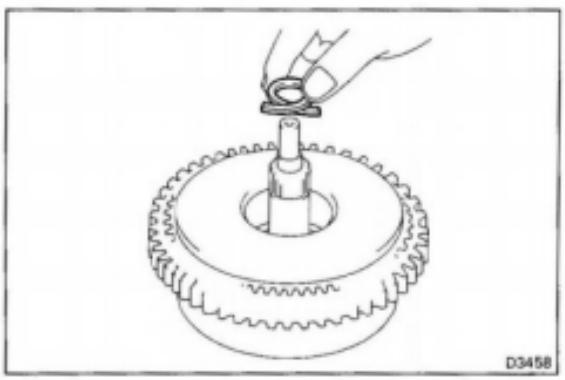

ASSEMBLY OF FRONT CLUTCH

1. INSTALL OIL SEAL RING

(a) Coat the oil seal ring with ATF.

(b) Contract the oil seal ring and install it to the input shaft.

NOTE: After installing the oil seal ring, check that it moves smoothly.

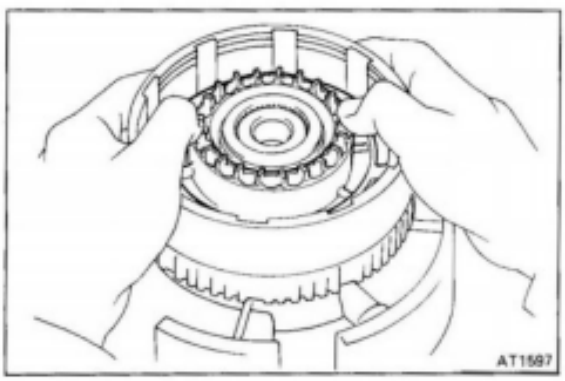

2. INSTALL TWO NEW O-RINGS ON FRONT CLUTCH PISTON

Coat new O-rings with ATF and install them on the front clutch piston.

3. INSTALL FRONT CLUTCH PISTON

Being careful not to damage the O-rings, press in the clutch piston into the front clutch drum by both hands.

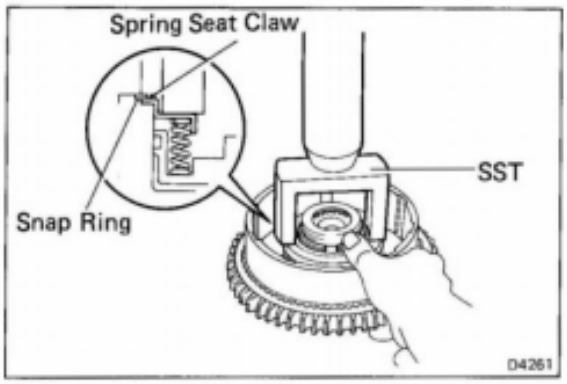

4. INSTALL TWENTY-TWO PISTON RETURN SPRINGS AND SPRING SEAT

5. COMPRESS PISTON RETURN SPRINGS AND INSTALL SNAP RING IN GROOVE

(a) Place SST on the spring seat, and compress the return springs with a shop press.

SST 09350-36010 (09350-06010)

(b) Install the snap ring by hand. Be sure the end gap of the snap ring is not aligned with the spring seat claw.

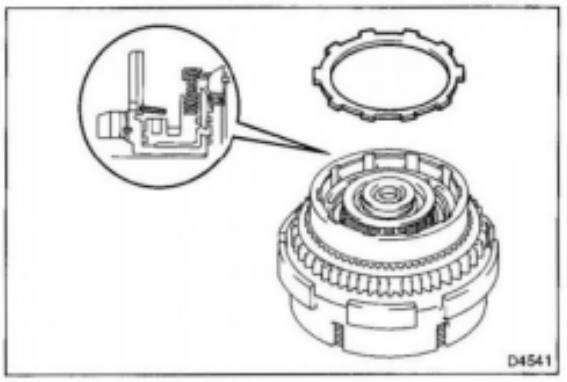

6. INSTALL CUSHION PLATE

Install the cushion plate rounded end down.

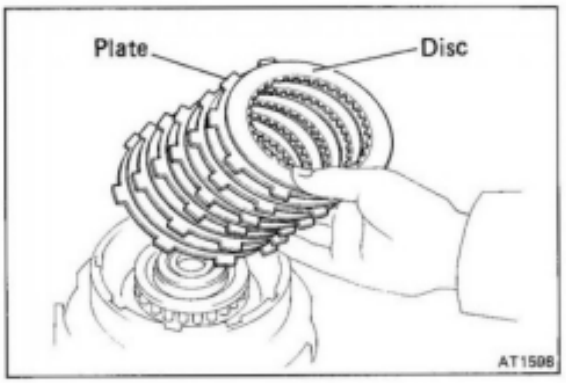

7. INSTALL PLATES AND DISCS

Install in order: P–D–P–D–P–D–P–D–P–D–P–D

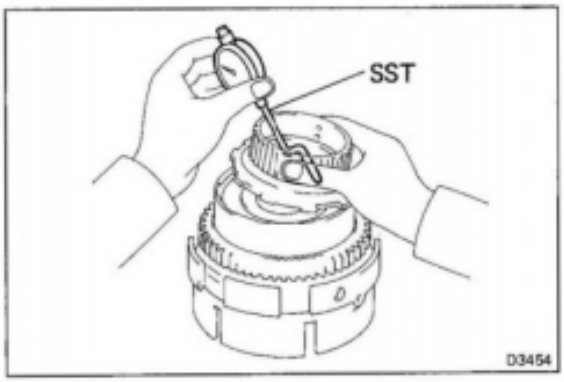

8. CHECK PISTON STROKE OF FRONT CLUTCH (C_1)

(a) Lift up the rear clutch hub and position the assembled SST and dial indicator.

SST 09350-36010 (09350-06110)

(b) Install the rear clutch hub and snap ring.

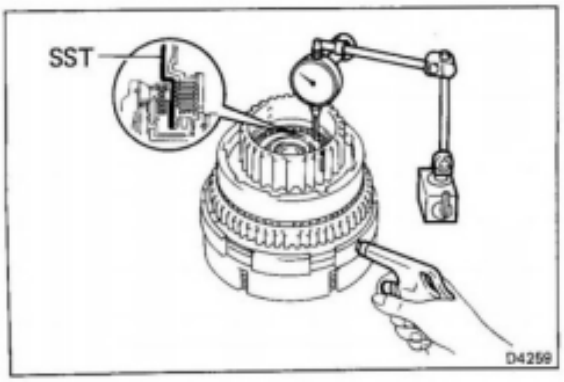

(c) Using SST and a dial indicator, measure the front clutch piston strokes, applying and releasing the compressed air (4–8 kg/cm², 57–114 psi or 392–785 kPa) as shown.

SST 09350-36010 (09350-06110)

Piston stroke: 3.93 – 4.23 mm (0.1547 – 0.1665 in.)

If the piston stroke exceeds the limit, replace the discs and recheck the piston stroke.

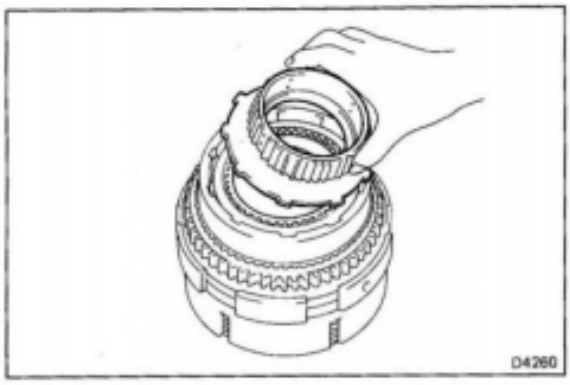
D4260

If the piston stroke is nonstandard, select another plate.

NOTE: There are four plates. mm (in.)

Thickness	
1.8 (0.071)	2.2 (0.0866)
2.0 (0.079)	2.4 (0.0945)

(d) Remove the snap ring and rear clutch hub.

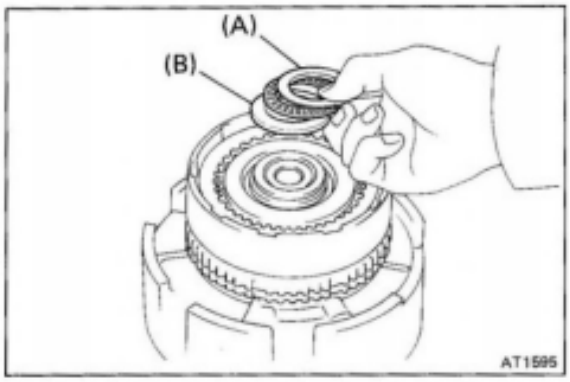

AT1595

9. INSTALL RACES AND BEARING

Coat the races and bearing with petroleum jelly and install them onto the front clutch drum.

NOTE: Races and bearing diameter. mm (in.)

	Inside	Outside
Race (A)	32.8 (1.291)	50.4 (1.984)
Bearing	34.7 (1.366)	52.0 (2.047)
Race (B)	37.0 (1.457)	52.0 (2.047)

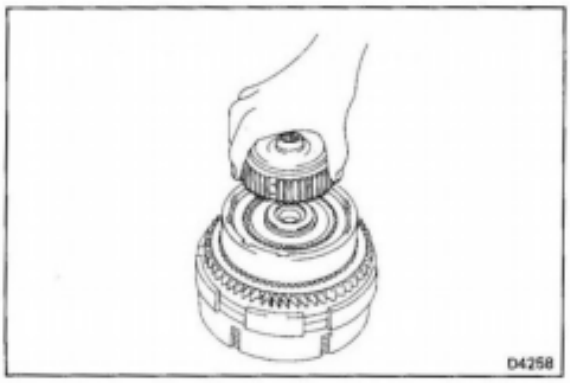
D4258

10. INSTALL FRONT CLUTCH HUB

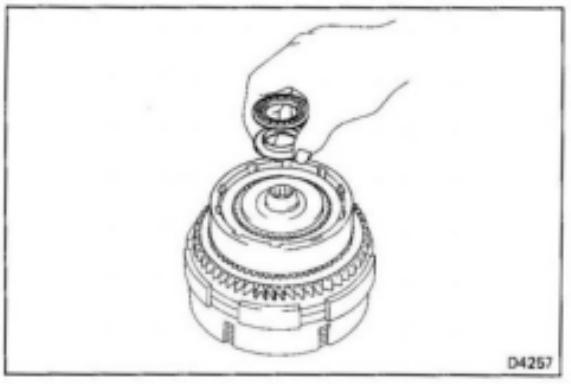
D4257

11. INSTALL RACE AND BEARING

Coat the race and bearing with petroleum jelly and install them onto the front clutch hub.

NOTE: Race and bearing diameter. mm (in.)

	Inside	Outside
Race	32.8 (1.291)	50.4 (1.984)
Bearing	34.7 (1.366)	52.0 (2.047)

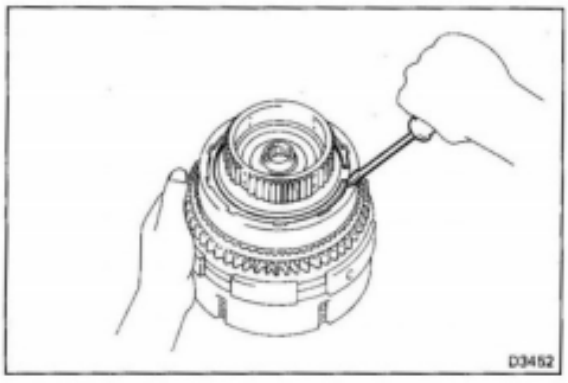
D3452

12. INSTALL REAR CLUTCH HUB

(a) Install the rear clutch hub onto the front clutch drum.

(b) Install the snap ring with a screwdriver.

REAR CLUTCH (C_2)

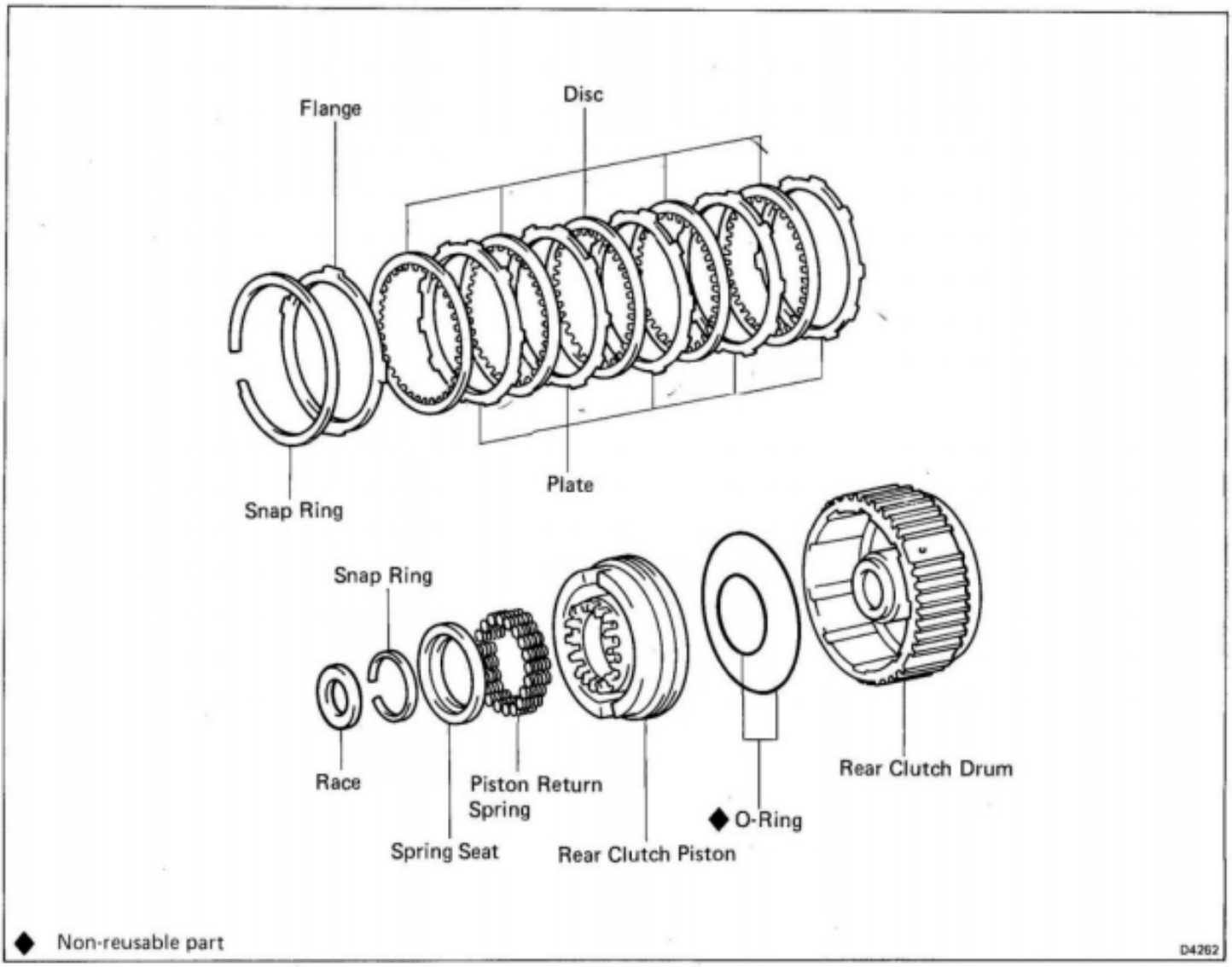

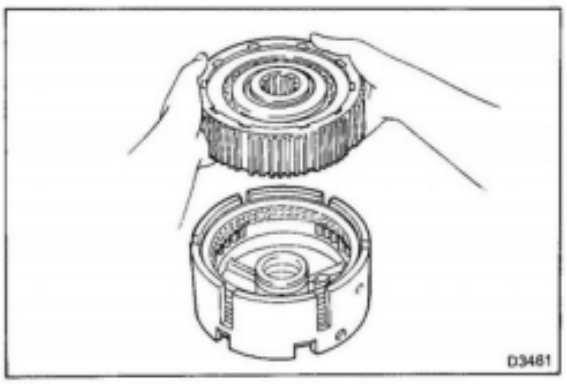

DISASSEMBLY OF REAR CLUTCH

1. CHECK PISTON STROKE OF FRONT CLUTCH (C_1)

(a) Place rear clutch drum into the center support.

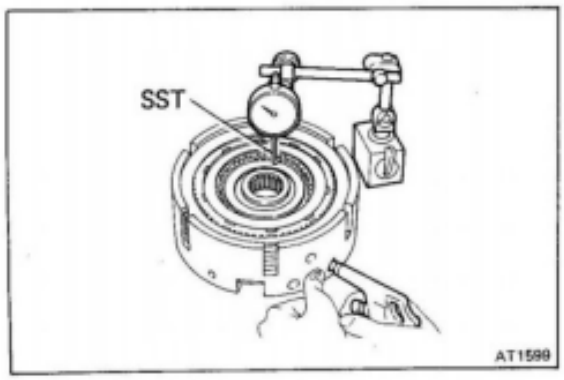

(b) Using SST and a dial indicator, measure the rear clutch piston stroke, applying and releasing the compressed air (4–8 kg/cm², 57–114 psi or 392–785 kPa) as shown.

SST 09350-36010 (09350-06110)

Piston stroke: 1.70 – 1.90 mm (0.0669 – 0.0748 in.)

If the piston stroke exceeds the limit, replace the discs and recheck the piston stroke.

If the piston stroke is nonstandard, select another flange.

NOTE: There are four flanges. mm (in.)

No.	Thickness	No.	Thickness
None	5.0 (0.197)	2	5.4 (0.213)
1	5.2 (0.205)	3	5.6 (0.220)

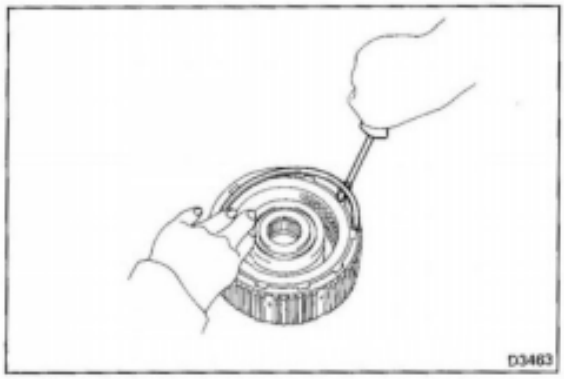

2. REMOVE FLANGE, DISCS AND PLATES

(a) Remove the snap ring with a screwdriver.

(b) Remove the flange, discs and plates.

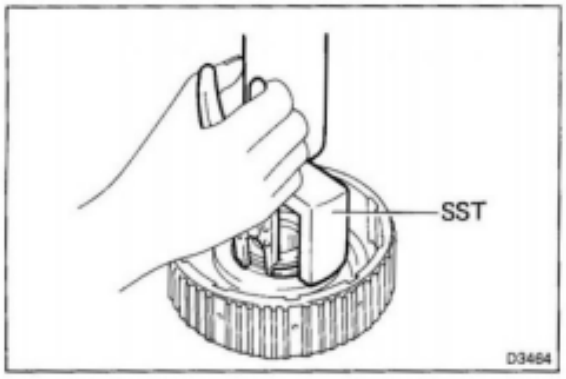

3. COMPRESS PISTON RETURN SPRINGS AND REMOVE SNAP RING

(a) Place SST on the spring seat and compress the return springs with a shop press.

SST 09350-36010 (09350-06010)

(b) Remove the snap ring with snap ring pliers.

4. REMOVE SPRING SEAT AND TWENTY-TWO PISTON RETURN SPRINGS

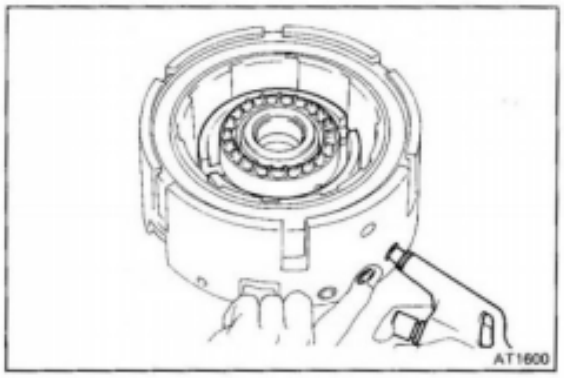

5. REMOVE REAR CLUTCH PISTON

(a) Place the rear clutch drum into the center support.

(b) Apply compressed air into the passage to remove the rear clutch piston as shown.

(c) Remove the rear clutch piston.

6. REMOVE O-RINGS FROM REAR CLUTCH PISTON

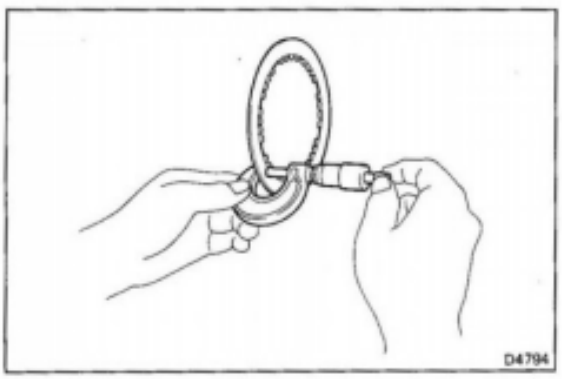

INSPECTION OF REAR CLUTCH

1. CHECK DISCS

Using a micrometer, measure the thickness of the discs.

Minimum thickness: 1.9 mm (0.075 in.)

If the thickness is less than the minimum, replace the disc.

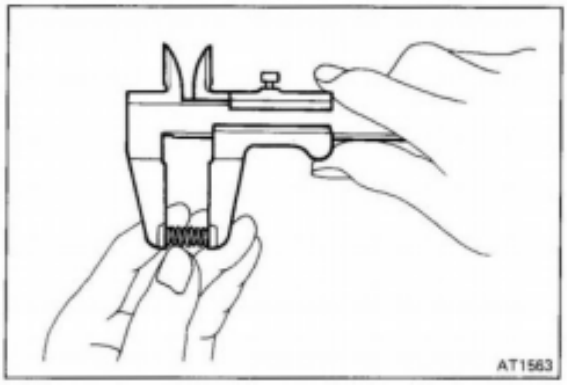

2. **CHECK PISTON RETURN SPRINGS**

Using calipers, measure the free length of the return springs.

Standard length: 31.24 mm (1.2299 in.)

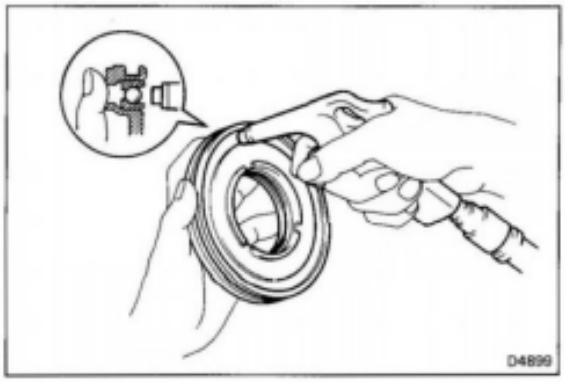

3. **CHECK REAR CLUTCH PISTON**

(a) Check that check ball is free by shaking the piston.

(b) Check that the valve does not leak by applying low-pressure compressed air to the hole.

ASSEMBLY OF REAR CLUTCH

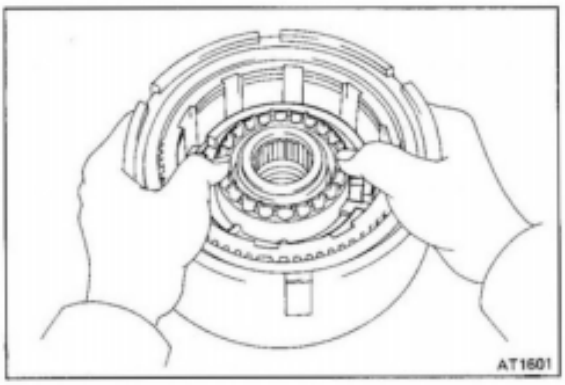

1. **INSTALL NEW O-RINGS ON REAR CLUTCH PISTON**

Coat new O-rings with ATF and install them on the rear clutch piston.

2. **INSTALL REAR CLUTCH PISTON**

Being careful not to damage the O-rings, press in the clutch piston into the rear clutch drum.

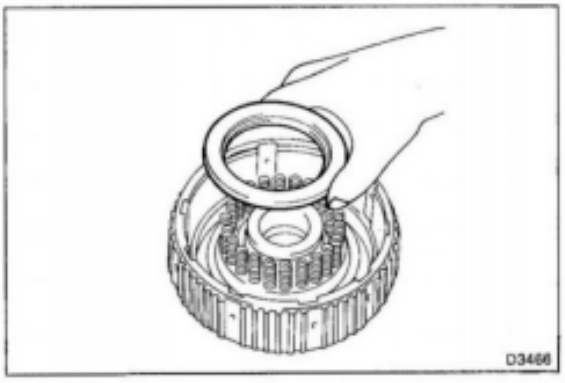

3. **INSTALL TWENTY-TWO PISTON RETURN SPRINGS AND SPRING SEAT**

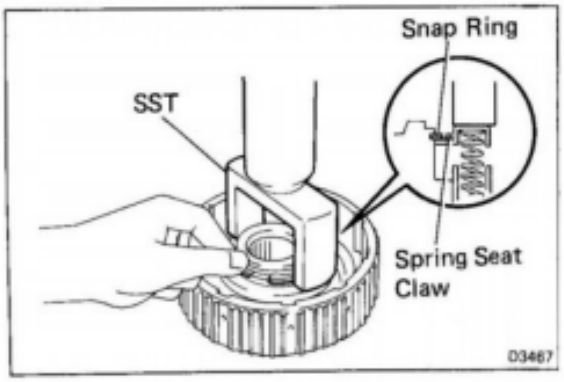

4. **COMPRESS PISTON RETURN SPRINGS AND INSTALL SNAP RING IN GROOVE**

(a) Place SST on the spring seat, and compress the return springs with a shop press.

SST 09350-36010 (09350-06010)

(b) Install the snap ring by hand. Be sure the end gap of the snap ring is not aligned with the spring seat claw.

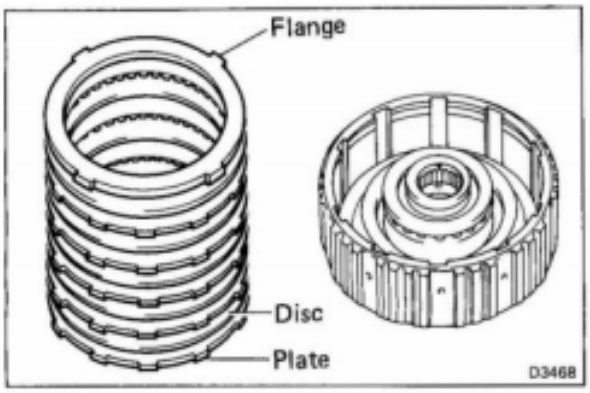

5. **INSTALL PLATES, DISCS AND FLANGE**

(a) Install in order: P–D–P–D–P–D–P–D–P–D

(b) Install the flange facing the rounded edge downward.

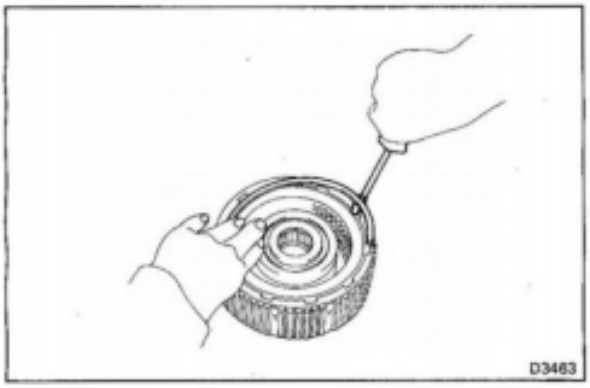

6. **INSTALL SNAP RING**

NOTE: Be sure the end gap of the snap ring is not aligned with the cutout portion of the rear clutch drum.

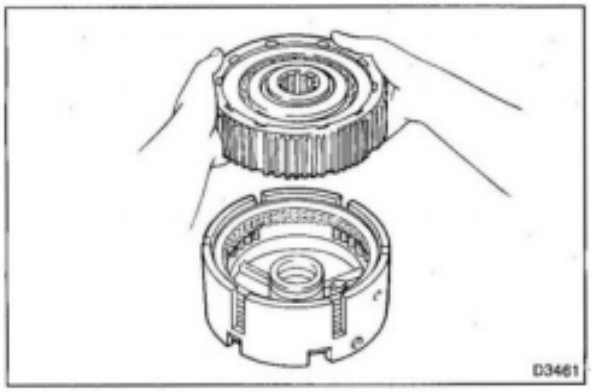

7. **CHECK PISTON STROKE OF REAR CLUTCH (C_2)**

(a) Place the rear clutch drum assembly into the center support assembly.

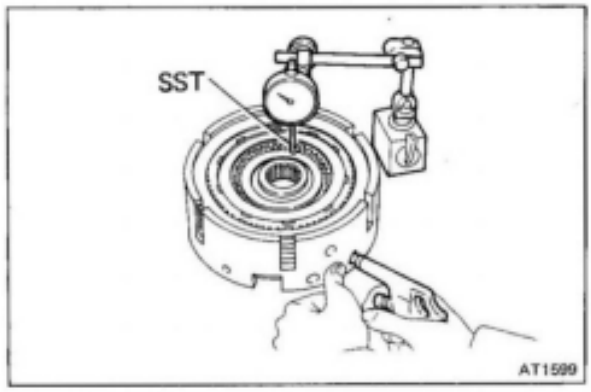

(b) Using SST and a dial indicator, measure the rear clutch piston stroke, applying and releasing the compressed air (4–8 kg/cm², 57–114 psi or 392–785 kPa) as shown.

SST 09350-36010 (09350-06110)

Piston stroke: 1.70 – 1.90 mm (0.0669 – 0.0748 in.)

If the piston stroke exceeds the limit, replace the discs and recheck the piston stroke.

If the piston stroke is less than the limit, parts may be improperly installed and should be reassembled.

If the piston stroke is nonstandard, select another flange.

NOTE: There are four flanges.

mm (in.)

No.	Thickness	No.	Thickness
None	5.0 (0.197)	2	5.4 (0.213)
1	5.2 (0.205)	3	5.6 (0.220)

CENTER SUPPORT

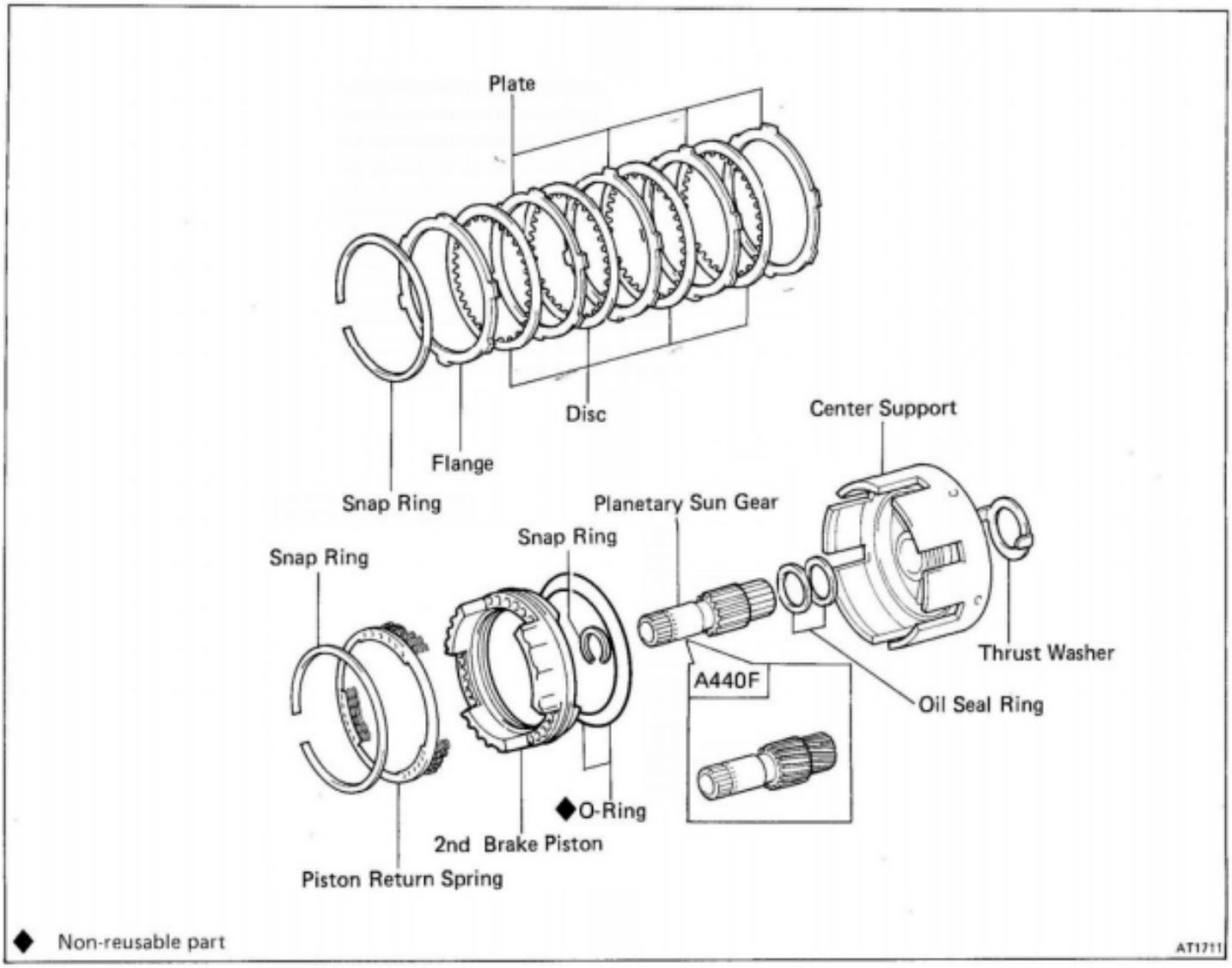

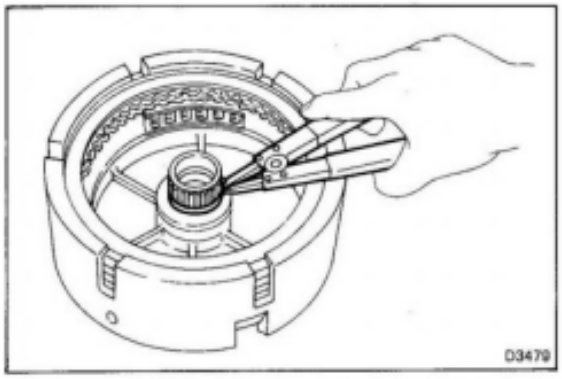

DISASSEMBLY OF CENTER SUPPORT

1. REMOVE PLANETARY SUN GEAR
   (a) Remove the snap ring with snap ring pliers.
   (b) Remove the planetary sun gear.

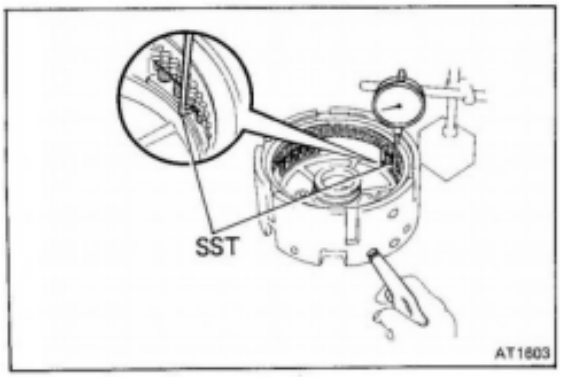

2. CHECK PISTON STROKE OF SECOND BRAKE (B_1)

Using SST and a dial indicator, measure the 2nd brake piston stroke, applying and releasing the compressed air (4–8 kg/cm², 57–114 psi or 392–785 kPa) as shown.

SST 09350-36010 (09350-06120)

Piston stroke: 1.60 – 1.80 mm (0.0630 – 0.0709 in.)

If the piston stroke exceeds the limit, replace the discs and recheck the piston stroke.

If the piston stroke is nonstandard, select another flange.

NOTE: There are four flanges. mm (in.)

No.	Thickness	No.	Thickness
None	5.0 (0.197)	2	5.4 (0.213)
1	5.2 (0.205)	3	5.6 (0.220)

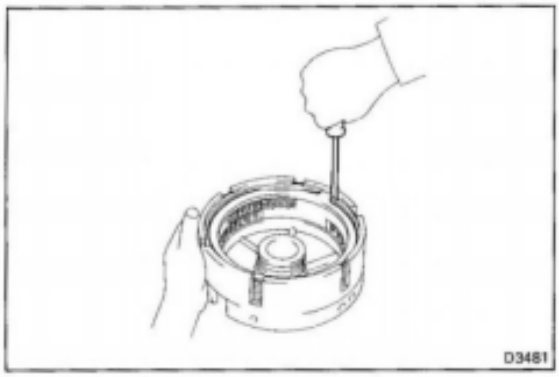

3. REMOVE FLANGE, DISCS AND PLATES

(a) Remove the snap ring with a screwdriver.

(b) Remove the flange, discs and plates.

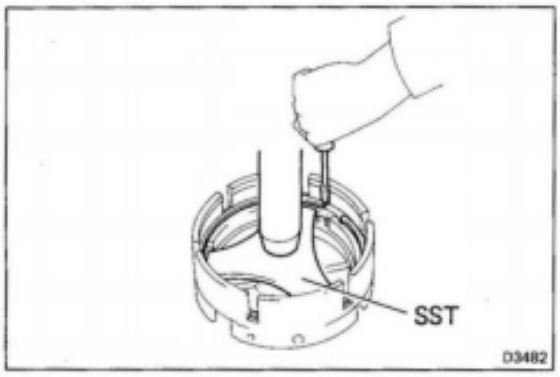

4. COMPRESS PISTON RETURN SPRING AND REMOVE SNAP RING

(a) Place SST on the spring retainer and compress the return spring with a shop press.

SST 09350-36010 (09350-06020)

(b) Remove the snap ring with a screwdriver.

5. REMOVE PISTON RETURN SPRING

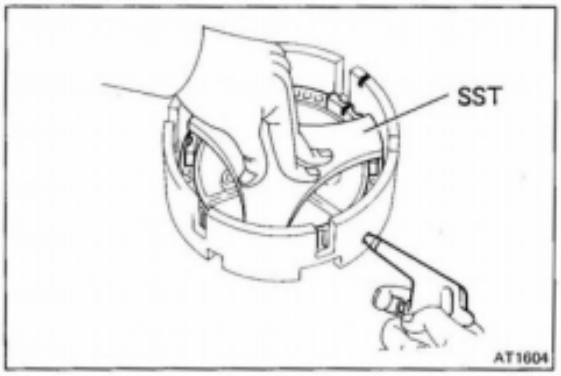

6. REMOVE SECOND BRAKE PISTON

(a) Place matchmarks on the piston and center support and then place SST on the piston.

(b) Holding SST so it is not slanted, apply compressed air into the passage to remove the 2nd brake piston.

(c) Remove the 2nd brake piston and then remove the O-rings from the piston.

SST 09350-36010 (09350-06020)

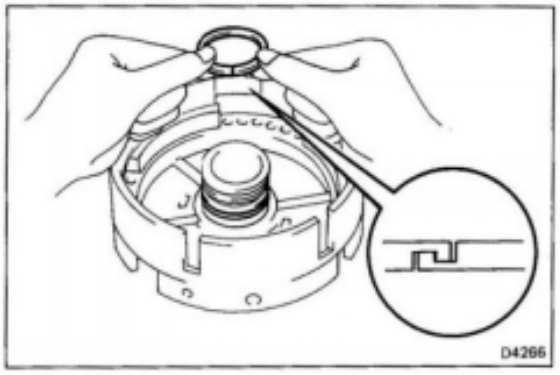

7. REMOVE TWO OIL SEAL RINGS

8. REMOVE THREE O-RINGS FROM OIL HOLES OF CENTER SUPPORT

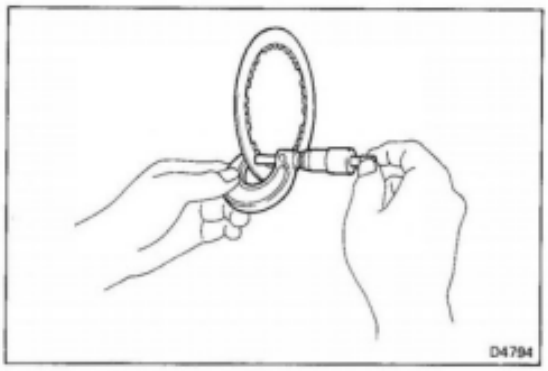

INSPECTION OF CENTER SUPPORT

1. CHECK DISCS

Using a micrometer, measure the thickness of the discs.

Minimum thickness: 1.9 mm (0.075 in.)

If the thickness is less than the minimum, replace the discs.

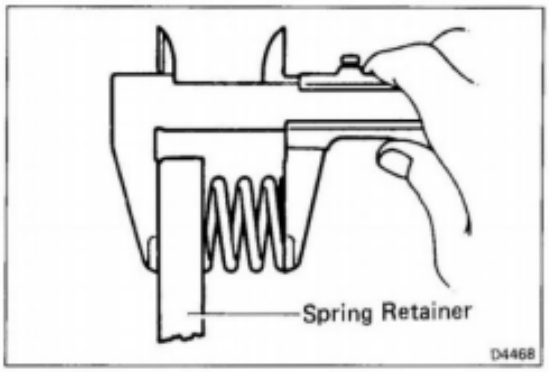

2. CHECK PISTON RETURN SPRING

Using calipers, measure the free length of the return spring.

Standard length: 22.75 mm (0.8957 in.)

3. CHECK CENTER SUPPORT BUSHINGS

Using a dial indicator, measure the inside diameter of the center support bushings.

Maximum inside diameter: 35.08 mm (1.3811 in.)

If the inside diameter is greater than the maximum, replace the center support.

ASSEMBLY OF CENTER SUPPORT

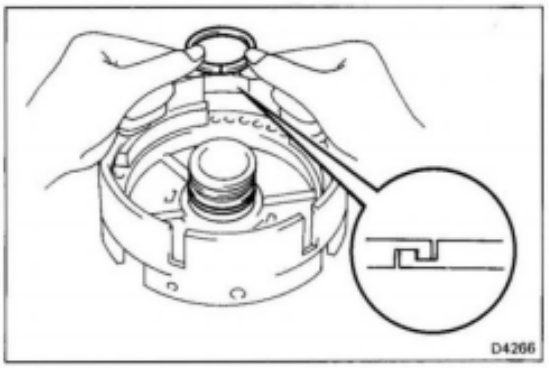

1. INSTALL OIL SEAL RINGS

(a) Coat the two oil seal rings with ATF.

(b) Contract the oil seals and install them onto the center support.

CAUTION: Do not spread the ring ends more than necessary.

NOTE: After installing the oil seal rings, check that they move smoothly.

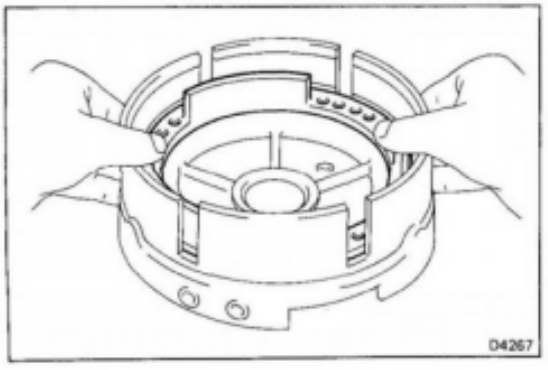

2. INSTALL THREE NEW O-RINGS

Coat three new O-rings with ATF and install them to the oil holes of the center support.

3. INSTALL NEW O-RINGS ON SECOND BRAKE PISTON

Coat two new O-rings with ATF and install them on the 2nd brake piston.

4. INSTALL SECOND BRAKE PISTON

(a) Align the matchmarks on the piston and center support.

(b) Being careful not to damage the O-rings, press in the brake piston into the center support by both hands.

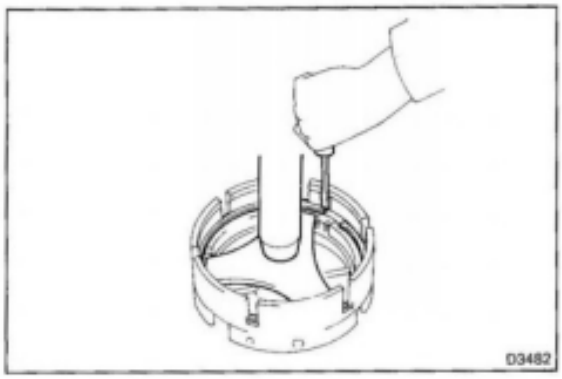

5. INSTALL PISTON RETURN SPRING

6. COMPRESS PISTON RETURN SPRING AND INSTALL SNAP RING IN GROOVE

(a) Place SST on the spring retainer, and compress the return spring with a shop press.

SST 09350-36010 (09350-06020)

(b) Install the snap ring with a screwdriver. Be sure the end gap of the snap ring is not aligned with the cut-out portion of the center support.

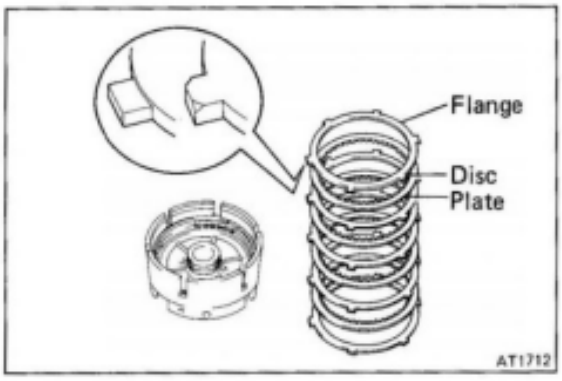

7. INSTALL PLATES, DISCS AND FLANGE

(a) Install in order: P–D–P–D–P–D–P–D

(b) Install the flange facing the rounded edge down.

8. INSTALL SNAP RING

Be sure end gap of the snap ring is not aligned with the cutout portion of the center support.

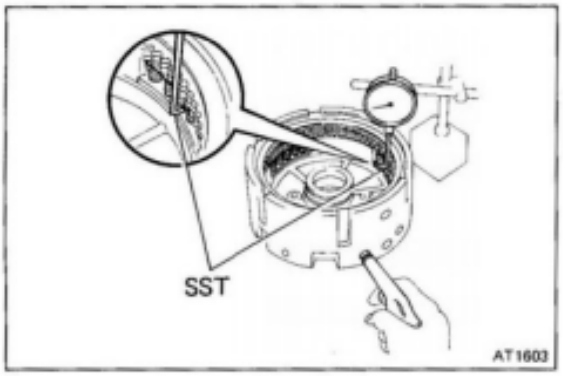

9. CHECK PISTON STROKE OF SECOND BRAKE (B_1)

Using SST and a dial indicator, measure the 2nd brake piston stroke, applying and releasing the compressed air (4–8 kg/cm², 57–114 psi or 392–785 kPa) as shown.

SST 09350-36010 (09350-06120)

Piston stroke: 1.60 – 1.80 mm (0.0630 – 0.0709 in.)

If the piston stroke exceeds the limit, replace the discs and recheck the piston stroke.

If the piston stroke is less than the limit, parts may be improperly assembled and require reassembly.

If the piston stroke is nonstandard, select another flange.

NOTE: There are four flanges. mm (in.)

No.	Thickness	No.	Thickness
None	5.0 (0.197)	2	5.4 (0.213)
1	5.2 (0.205)	3	5.6 (0.220)

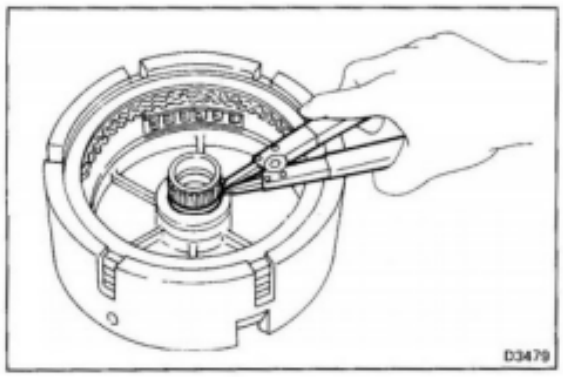

10. INSTALL PLANETARY SUN GEAR

Install the planetary sun gear and then install the snap ring.

PLANETARY GEAR AND OUTPUT SHAFT (A440F)

COMPONENTS

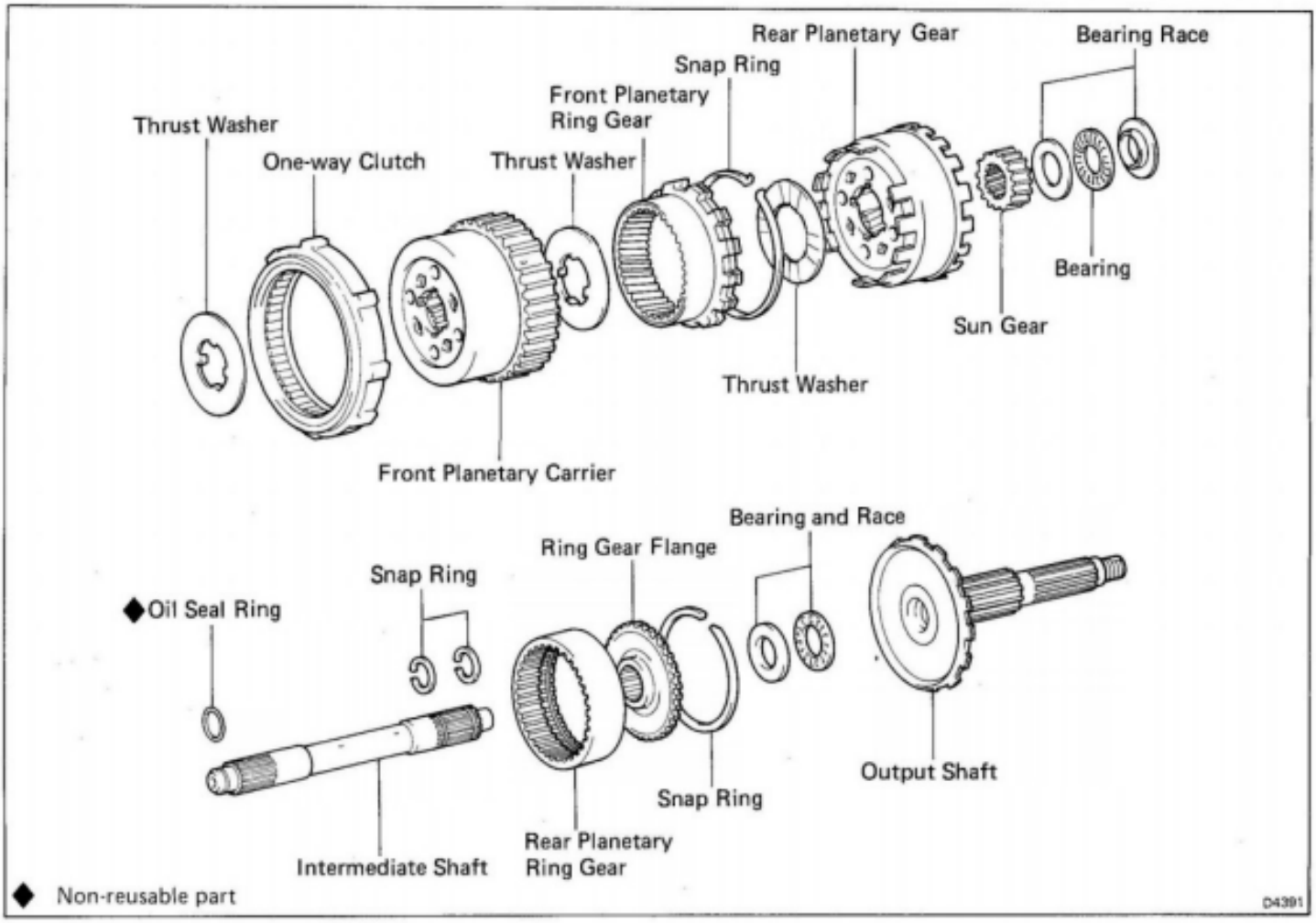

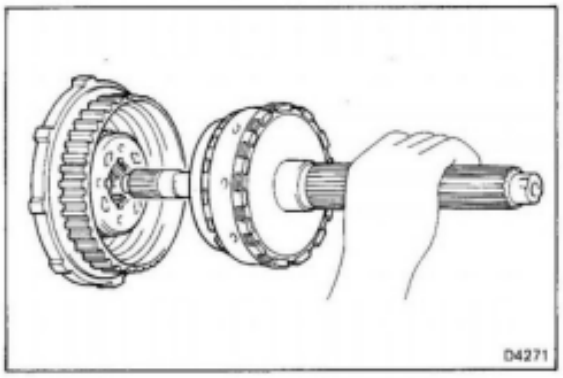

DISASSEMBLY OF PLANETARY GEAR AND OUTPUT SHAFT

1. REMOVE FRONT PLANETARY CARRIER

Remove the front planetary carrier from the output shaft.

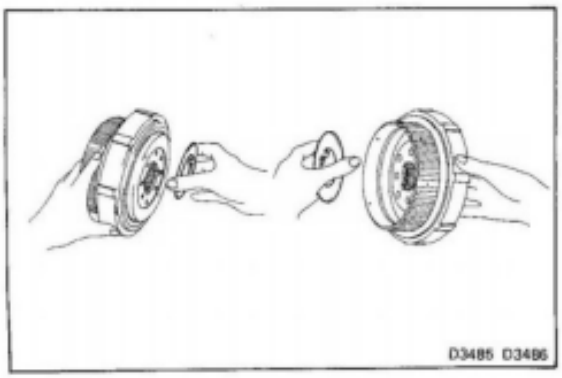

2. REMOVE THRUST WASHER

Remove the two thrust washers from the front planetary carrier.

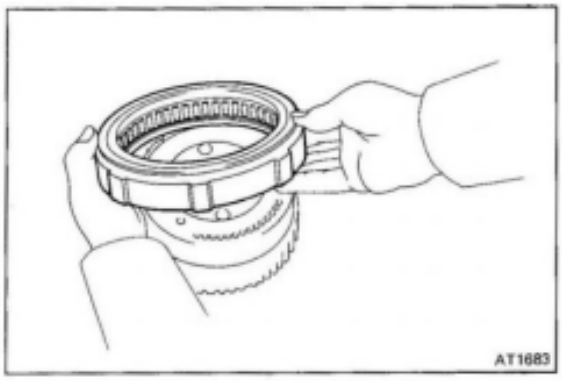

3. REMOVE ONE-WAY CLUTCH

Remove the one-way clutch from the front planetary carrier. Note the direction of the one-way clutch.

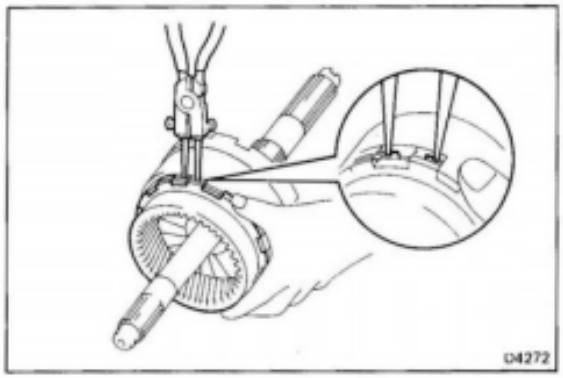

4. REMOVE FRONT PLANETARY RING GEAR

While compressing the snap ring with snap ring pliers remove the ring gear.

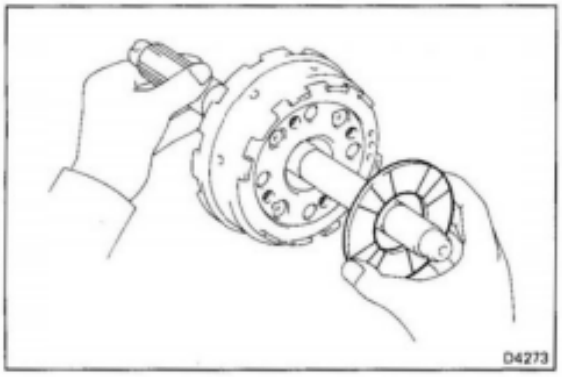

5. REMOVE OUTPUT SHAFT THRUST WASHER

Remove the thrust washer from the output shaft. Note the direction of thrust washer.

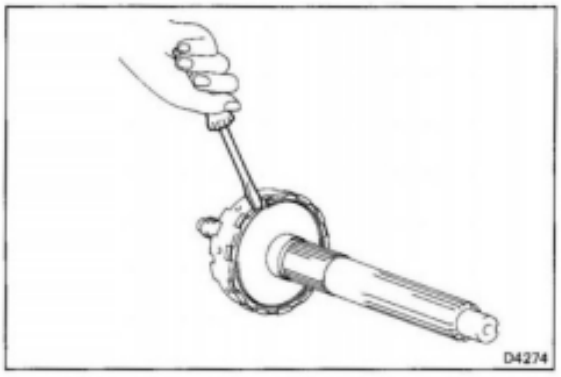

6. REMOVE REAR PLANETARY GEAR ASSEMBLY

(a) Remove the snap ring and the rear planetary gear assembly from the output shaft.

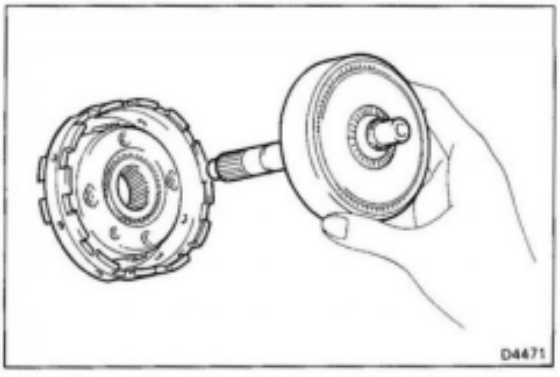

(b) Remove the assembled rear planetary ring gear and intermediate shaft from the rear planetary gear assembly.

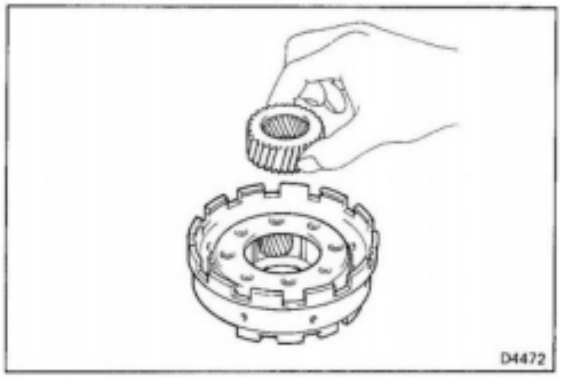

(c) Remove the sun gear from the rear planetary gear assembly.

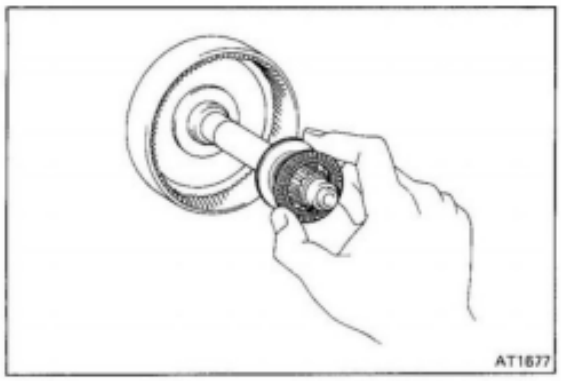

7. REMOVE REAR PLANETARY RING GEAR

(a) Remove the thrust bearing and race from the rear planetary ring gear. Note the direction of the bearing and race.

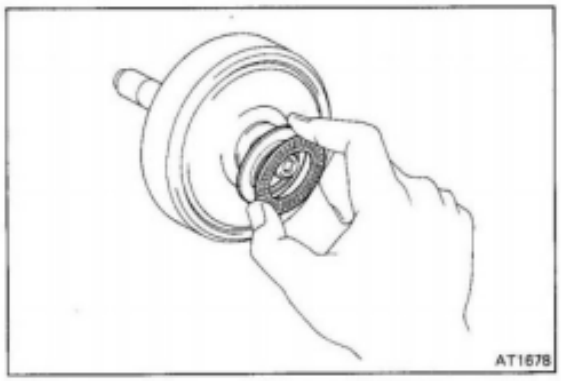

(b) Remove the thrust bearing and race from the rear planetary ring gear. Note the direction of the bearing and race.

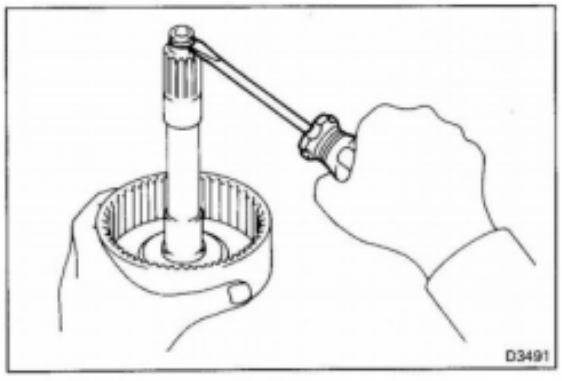

(c) Remove the oil seal ring from the intermediate shaft.

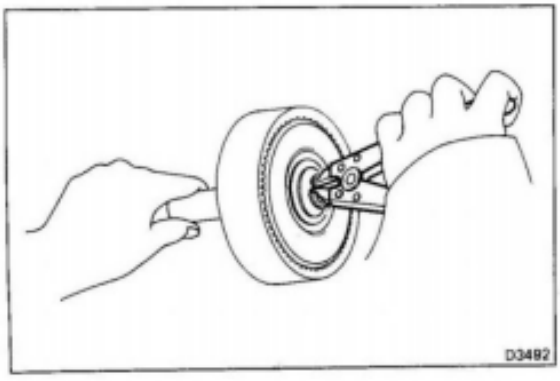

(d) Remove the snap ring and remove the rear planetary ring gear from the intermediate shaft.

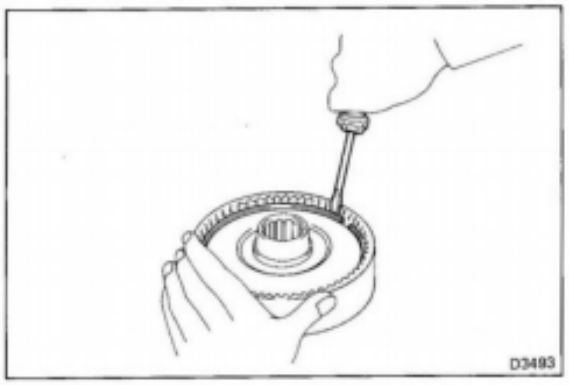

(e) Remove the snap ring and remove the planetary gear flange from the rear planetary ring gear. Note the direction of the planetary gear flange.

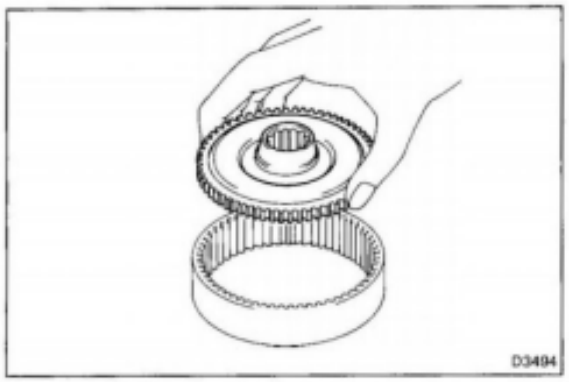

ASSEMBLY OF PLANETARY GEAR AND OUTPUT SHAFT

(See page AT-69)

1. INSTALL REAR PLANETARY RING GEAR

(a) Install the planetary gear flange and snap ring to the rear planetary ring gear. Make sure the direction of the planetary gear flange.

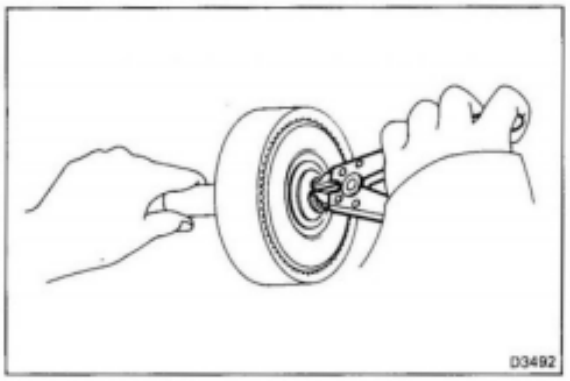

(b) Install the rear planetary ring gear and snap ring to the intermediate shaft.

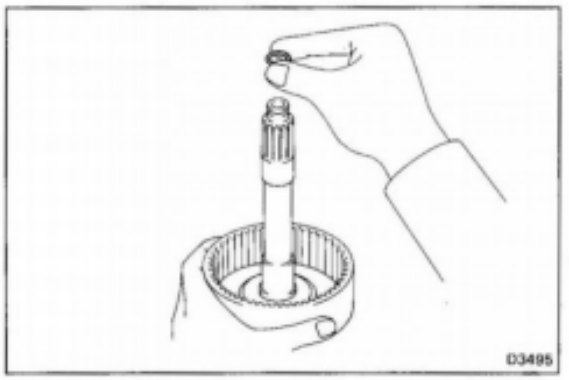

(c) Apply ATF to the new oil seal ring, and install it to the intermediate shaft.

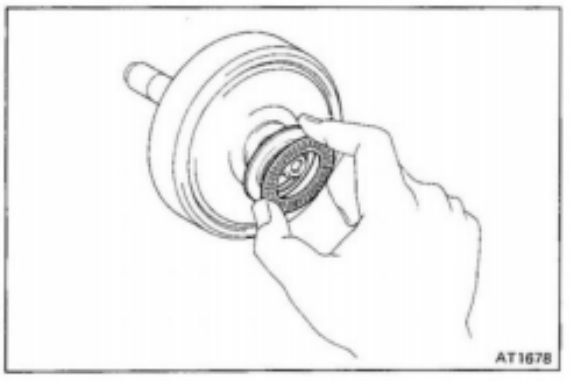

(d) Install the race and thrust bearing to the rear planetary ring gear. Confirm the proper correct direction of the bearing and race.

NOTE: Race and bearing diameter. mm (in.)

	Inside	Outside
Race	32.8 (1.291)	50.4 (1.984)
Bearing	34.7 (1.366)	52.0 (2.047)

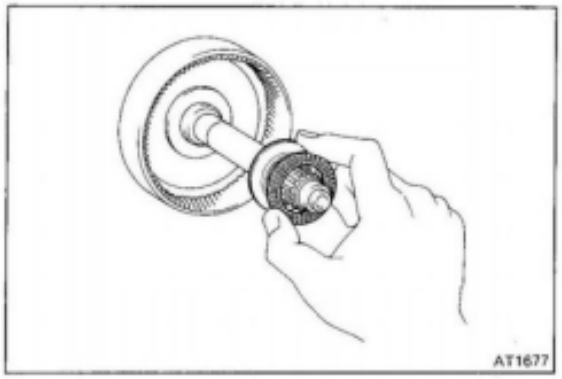

(e) Install the race and thrust bearing to the rear planetary ring gear. Confirm the proper direction of the bearing and race.

NOTE: Race and bearing diameter mm (in.)

	Inside	Outside
Race	32.8 (1.291)	50.4 (1.984)
Bearing	34.7 (1.366)	52.0 (2.047)

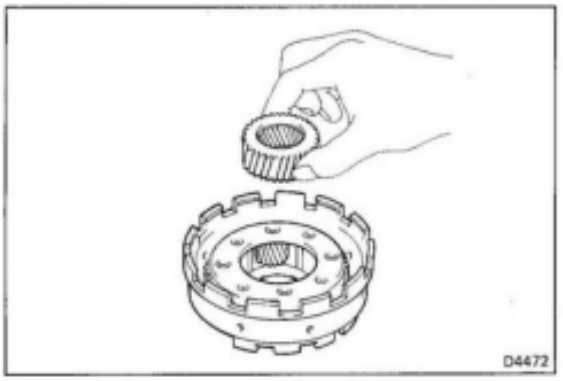

2. INSTALL REAR PLANETARY GEAR ASSEMBLY

(a) Install the planetary sun gear to the rear planetary gear assembly.

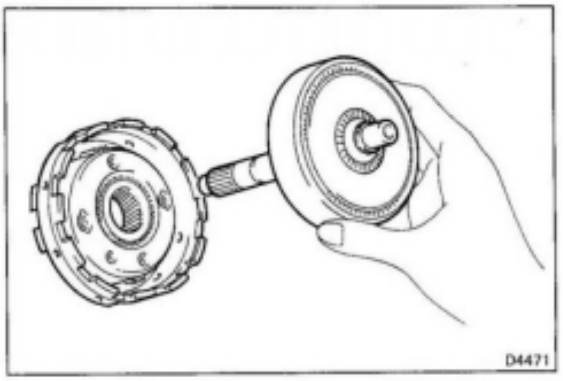

(b) Install the assembled rear planetary ring gear and intermediate shaft to the rear planetary gear assembly.

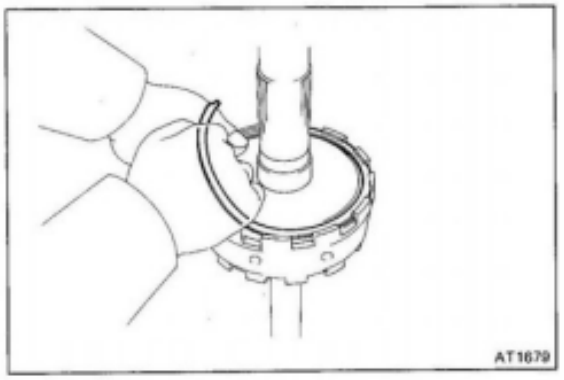

(c) Install the assembled rear planetary gear assembly and rear planetary ring gear to the output shaft.

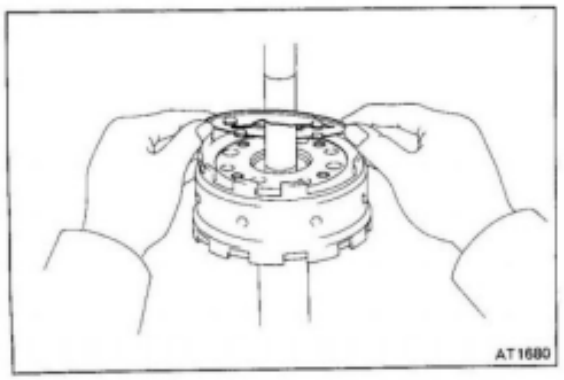

3. INSTALL OUTPUT SHAFT THRUST WASHER

Install the thrust washer to the output shaft. Confirm the proper direction of the thrust washer.

NOTE: Securely fit the lip of the thrust washer into the groove of the planetary gear.

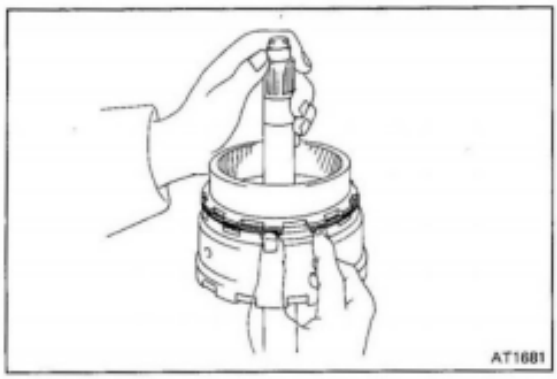

4. INSTALL FRONT PLANETARY RING GEAR

(a) Install the snap ring by hand.

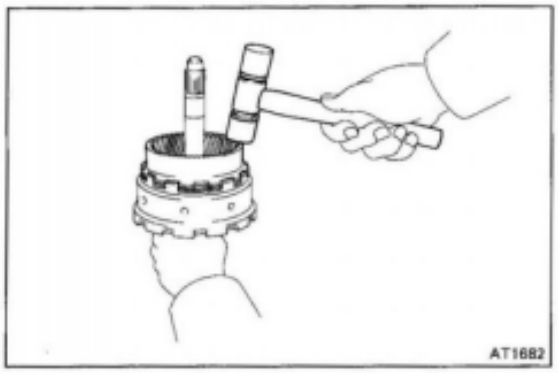

(b) Using a plastic hammer, lightly tap the planetary ring gear and install the snap ring into the groove.

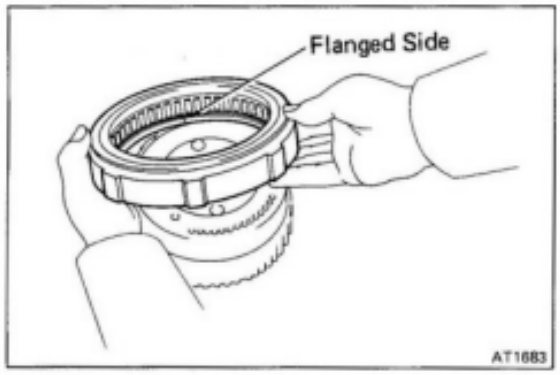

5. INSTALL ONE-WAY CLUTCH

(a) Position the one-way clutch to the carrier facing the flanged side downward.

(b) While rotate the one-way clutch, install it to the carrier.

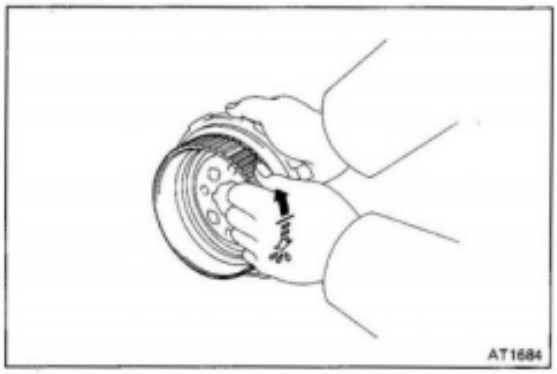

(c) Hold the one-way clutch outer race and must rotating freely counterclockwise and lock clockwise.

If the clutch does not work correctly, it must be replaced.

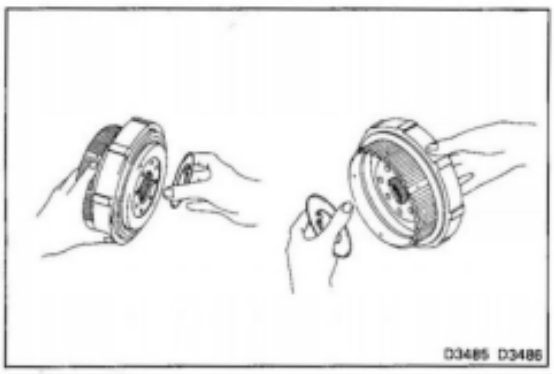

6. INSTALL FRONT PLANETARY CARRIER THRUST WASHER

Install the thrust washer to the front planetary carrier.

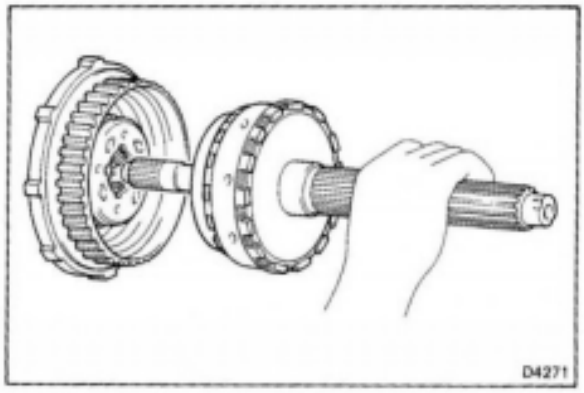

7. INSTALL FRONT PLANETARY CARRIER

Install the front planetary carrier to the output shaft.

PLANETARY GEAR AND OUTPUT SHAFT (A440L)

COMPONENTS

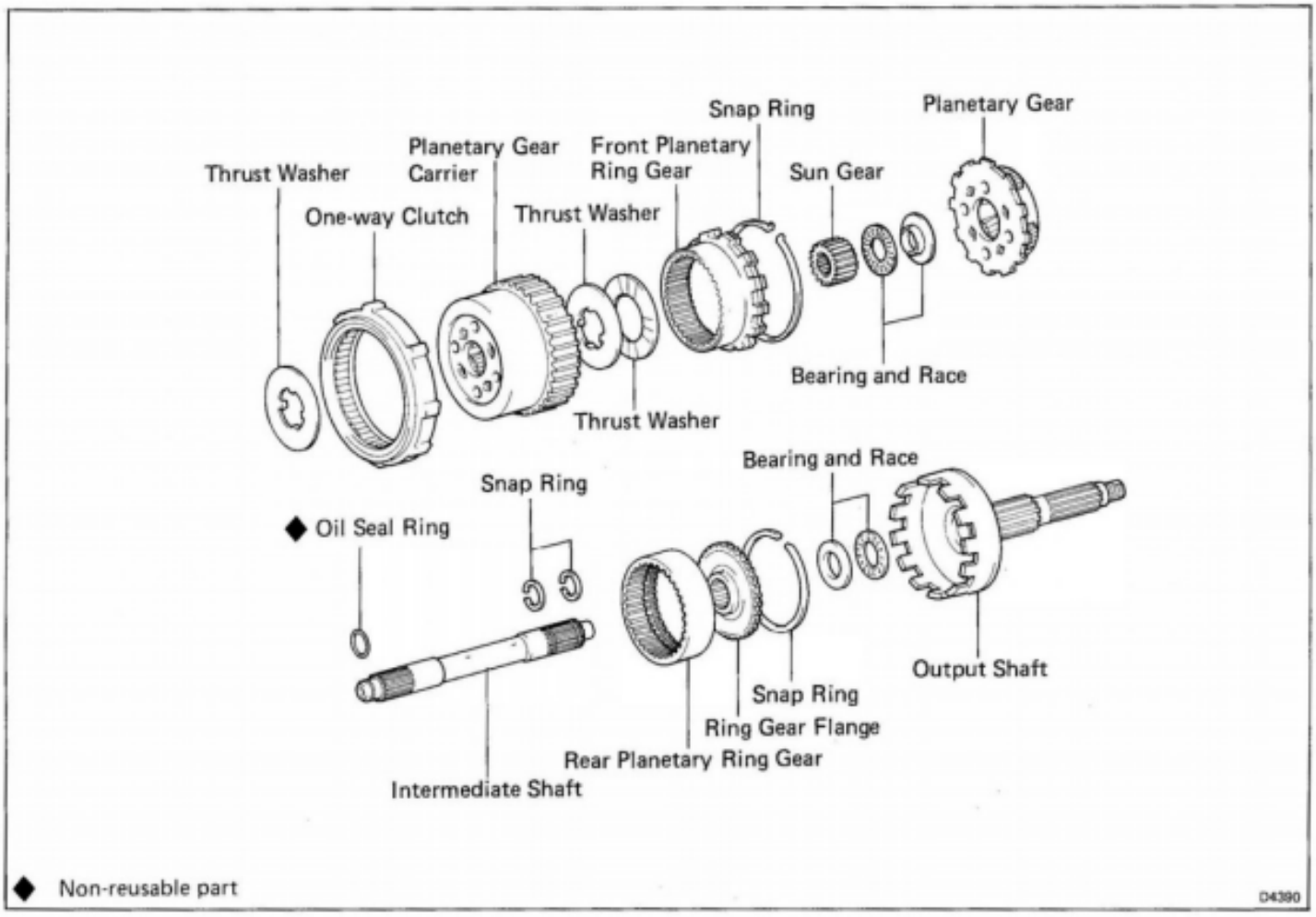

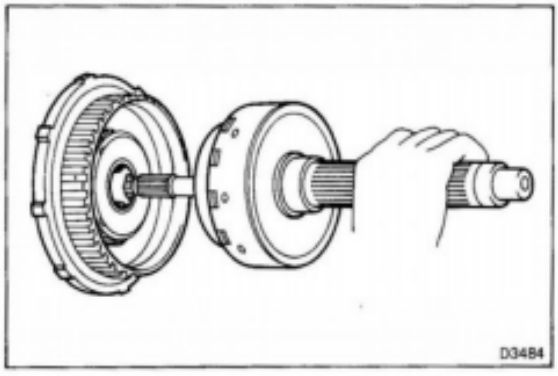

DISASSEMBLY OF PLANETARY GEAR AND OUTPUT SHAFT

1. REMOVE FRONT PLANETARY CARRIER

Remove the front planetary gear from the output shaft.

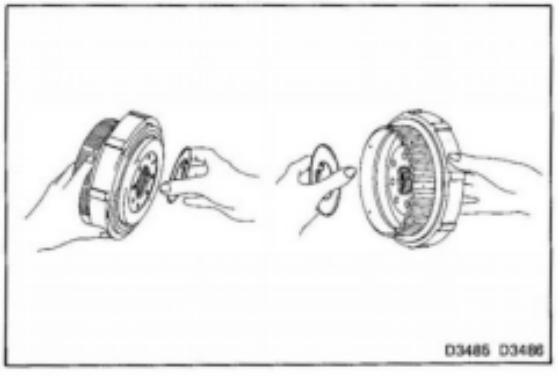

2. REMOVE FRONT PLANETARY CARRIER THRUST WASHER

Remove the two thrust washers from the front planetary carrier.

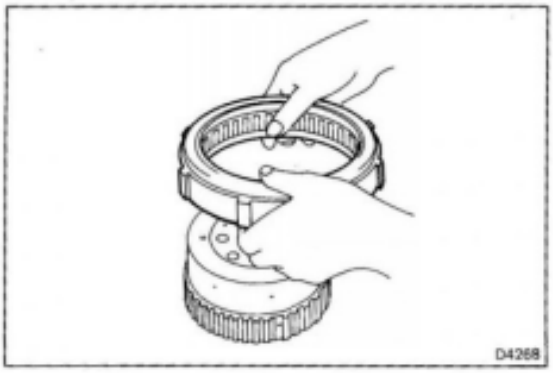

3. REMOVE ONE-WAY CLUTCH

Remove the one-way clutch from the front planetary carrier. Note the direction of the one-way clutch.

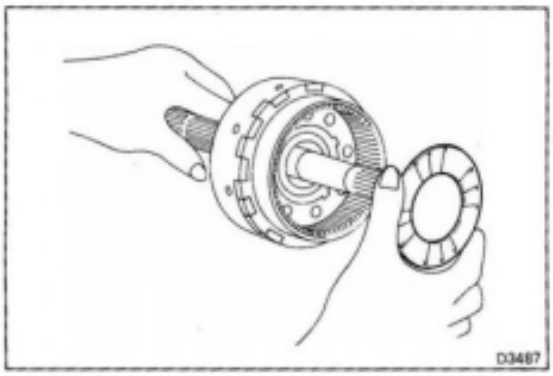

4. REMOVE OUTPUT SHAFT THRUST WASHER

Remove the thrust washer from the output shaft. Note the direction of the thrust washer.

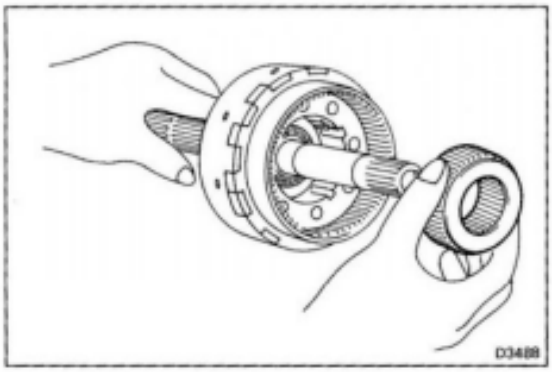

5. REMOVE PLANETARY SUN GEAR

Remove the planetary sun gear from the output shaft.

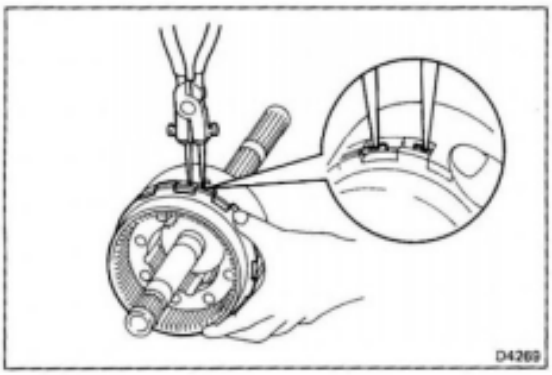

6. REMOVE PLANETARY RING GEAR

While compressing the snap ring remove the ring gear.

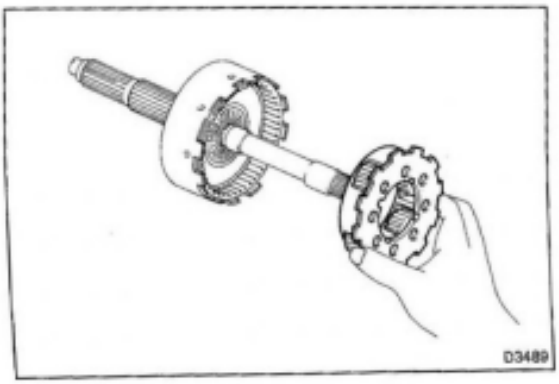

7. REMOVE REAR PLANETARY GEAR ASSEMBLY

Remove the rear planetary gear assembly from the output shaft.

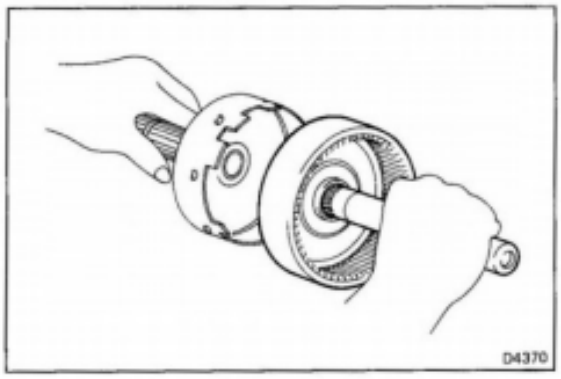

8. REMOVE REAR PLANETARY RING GEAR

(a) Remove the assembled rear planetary gear and intermediate shaft from the output shaft.

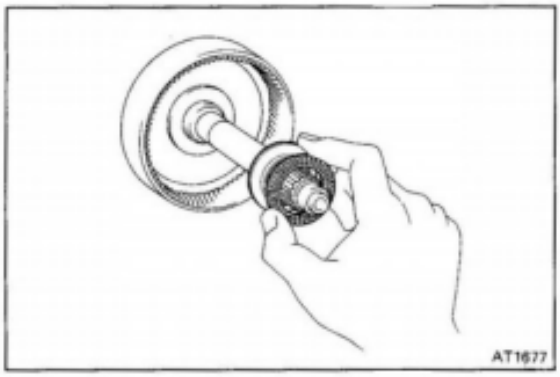

(b) Remove the thrust bearing and race from the rear planetary ring gear. Note the direction of the bearing and race.

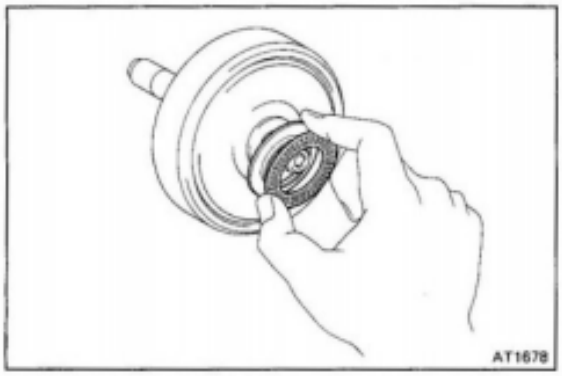

(c) Remove the thrust bearing and race from the rear planetary ring gear. Note the direction of the bearing and race.

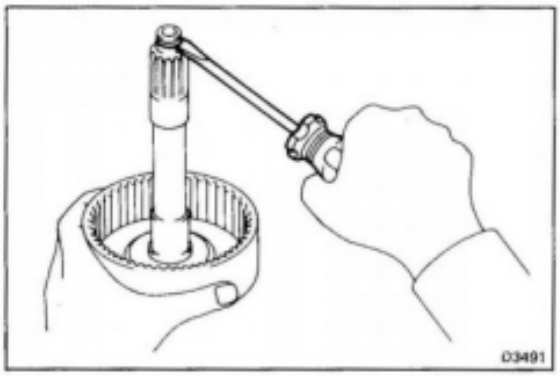

(d) Remove the oil seal ring from the intermediate shaft.

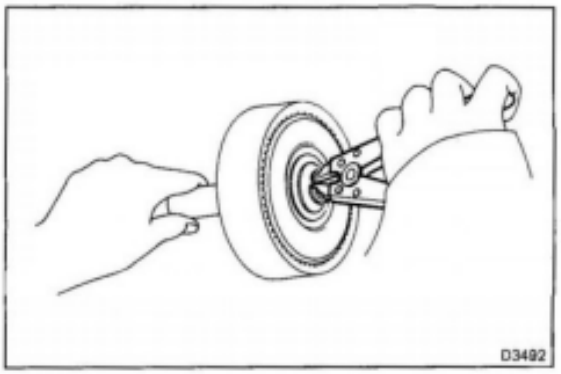

(e) Remove the snap ring and rear planetary ring gear from the intermediate shaft.

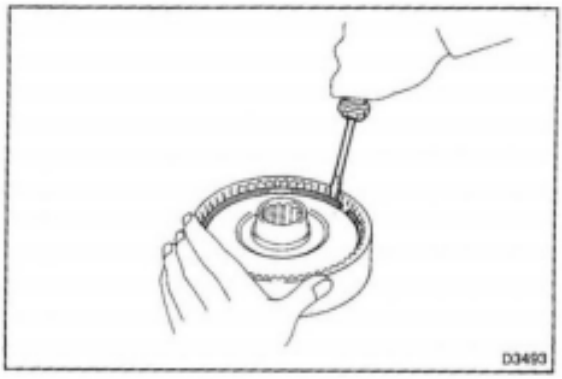

(f) Remove the snap ring and planetary gear flange from the rear planetary ring gear. Note the direction of the planetary gear flange.

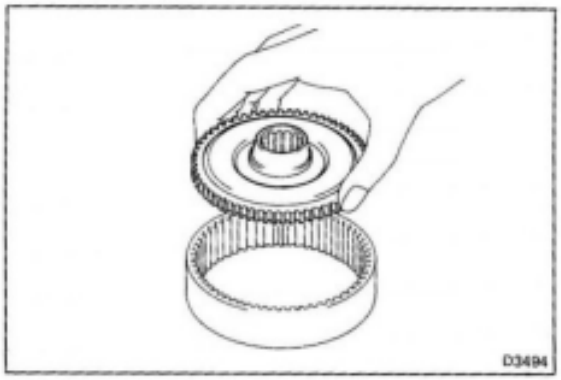

ASSEMBLY OF PLANETARY GEAR AND OUTPUT SHAFT

(See page AT-76)

1. INSTALL REAR PLANETARY RING GEAR

(a) Install the planetary gear flange and snap ring to the rear planetary ring gear. Confirm the proper direction of the planetary gear flange.

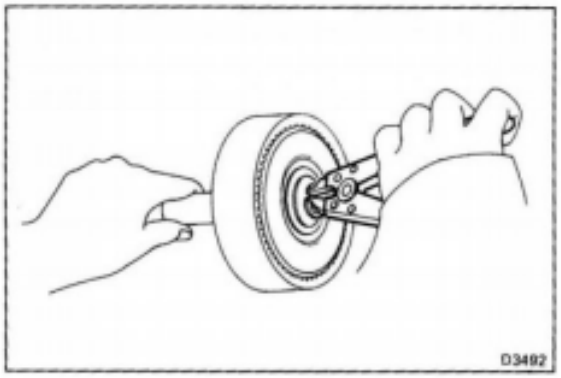

(b) Install the rear planetary ring gear and snap ring to the intermediate shaft.

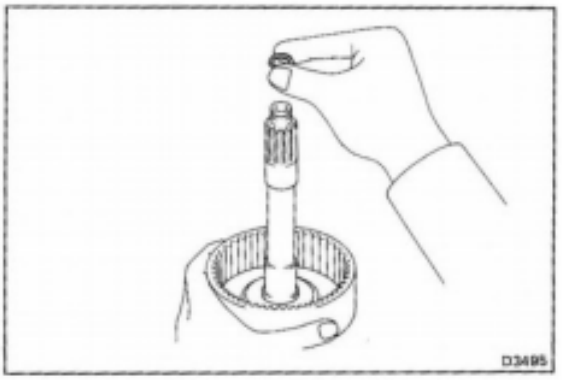

(c) Apply ATF to the new oil seal ring, and install it to the intermediate shaft.

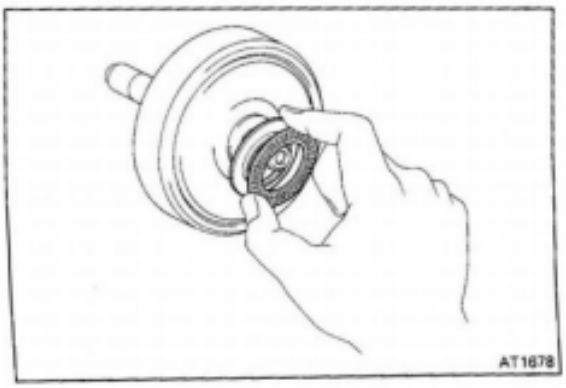

(d) Install the race and thrust bearing to the rear planetary ring gear. Make sure the correct direction of the bearing and race.

NOTE: Race and bearing diameter. mm (in.)

	Inside	Outside
Race	32.8 (1.291)	50.4 (1.984)
Bearing	34.7 (1.366)	52.0 (2.047)

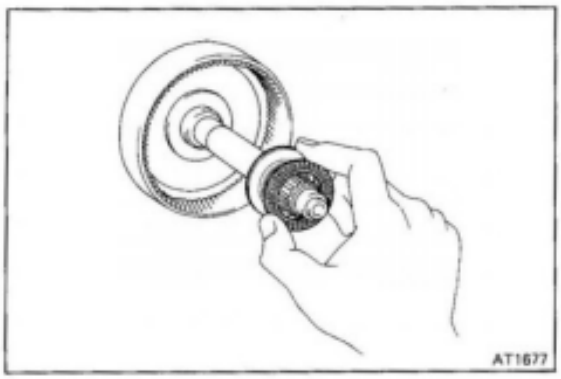

(e) Install the race and thrust bearing to the rear planetary ring gear. Confirm the proper direction of the bearing and race.

NOTE: Race and bearing diameter mm (in.)

	Inside	Outside
Race	32.8 (1.291)	50.4 (1.984)
Bearing	34.7 (1.366)	52.0 (2.047)

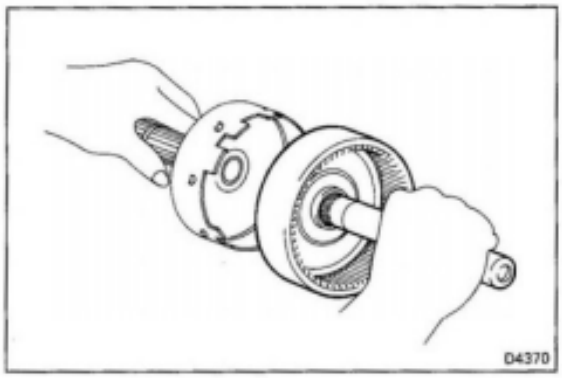

(f) Install the assembled rear planetary ring gear and intermediate shaft to the output shaft.

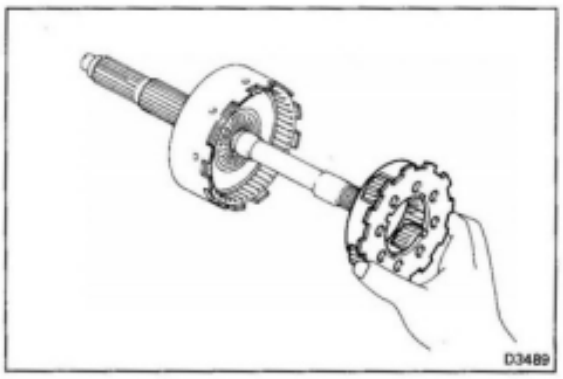

2. INSTALL REAR PLANETARY GEAR ASSEMBLY

Install the rear planetary ring gear assembly to the output shaft.

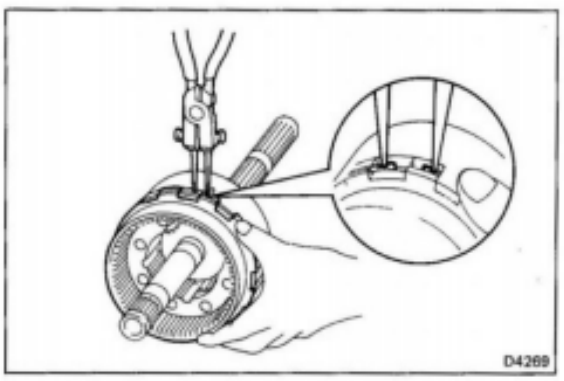

3. INSTALL FRONT PLANETARY RING GEAR

While compressing the snap ring install the ring gear.

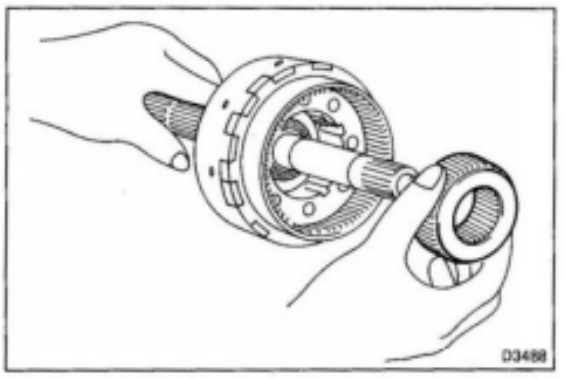

4. INSTALL PLANETARY SUN GEAR

Install the planetary sun gear to the output shaft.

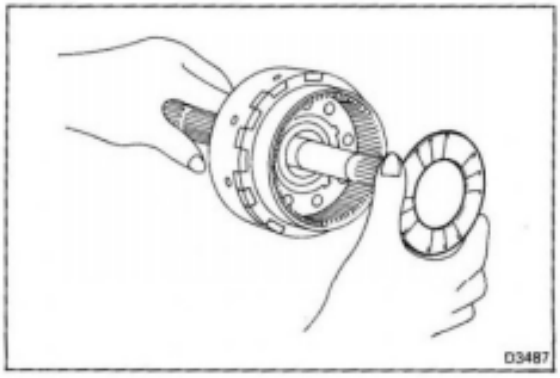

5. INSTALL OUTPUT SHAFT THRUST WASHER

Install the thrust washer to the output shaft. Confirm the proper direction of the thrust washer.

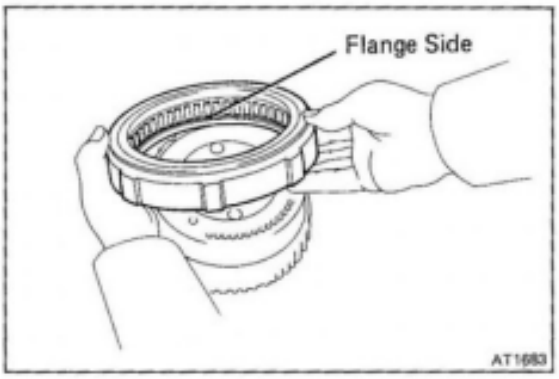

6. INSTALL ONE-WAY CLUTCH

(a) Position the one-way clutch to the carrier.

(b) While rotate the one-way clutch, install it to the carrier.

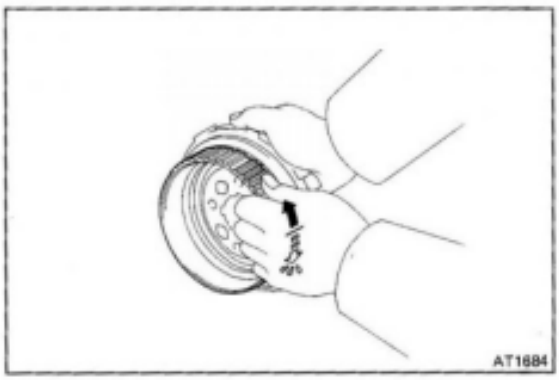

(c) Hold the one-way clutch outer race and must rotating freely counterclockwise and lock clockwise.

If the clutch does not work correctly, it must be replaced.

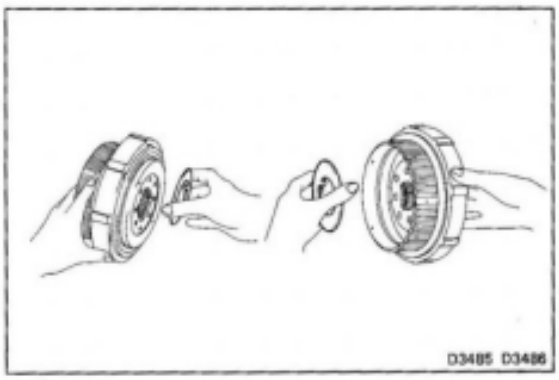

7. INSTALL FRONT PLANETARY CARRIER THRUST WASHERS

Install the thrust washers to the front planetary thrust washer.

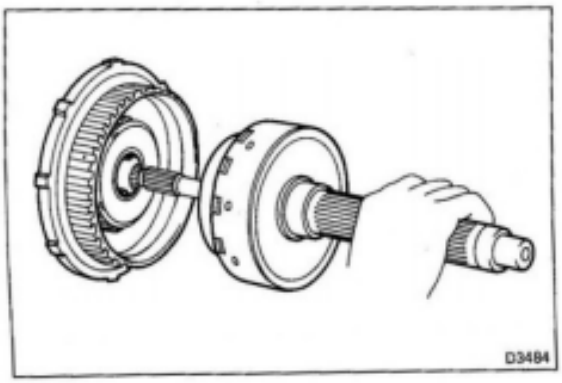

8. INSTALL FRONT PLANETARY CARRIER

Install the front planetary carrier to the output shaft.

FIRST AND REVERSE BRAKE (B_3)

COMPONENTS

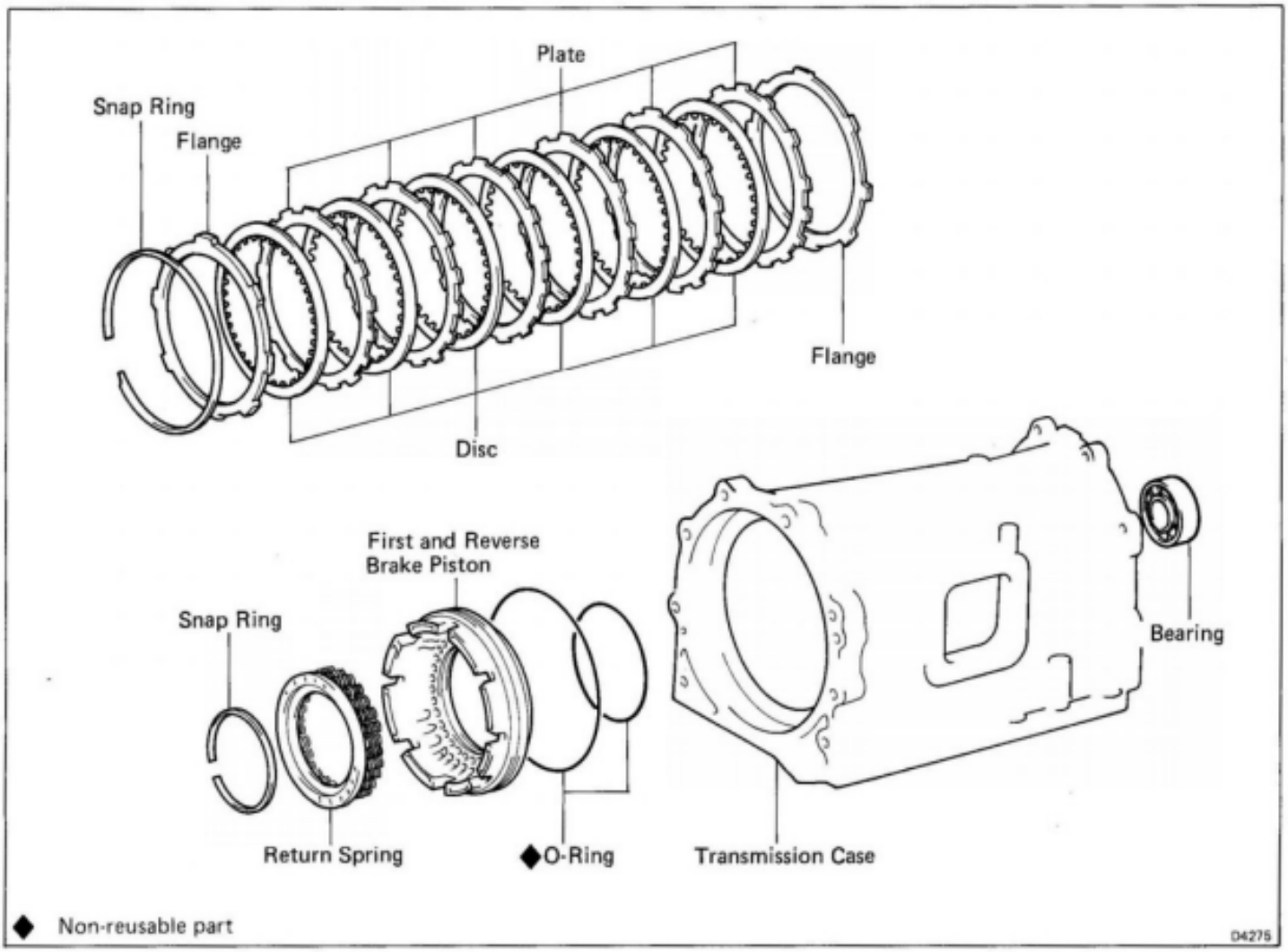

◆ Non-reusable part

D4275

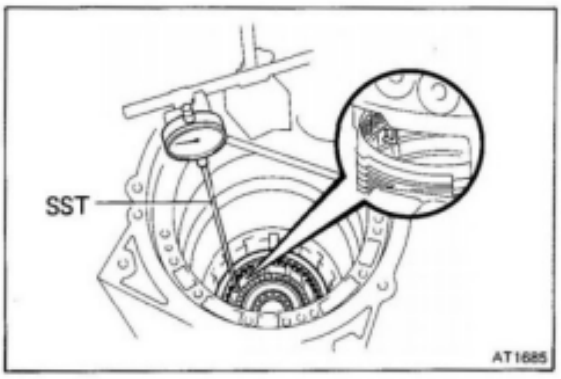

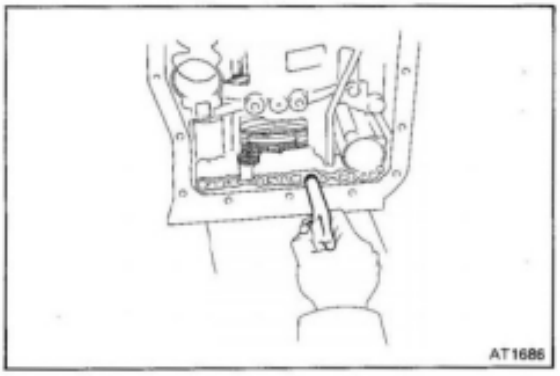

DISASSEMBLY OF FIRST AND REVERSE BRAKE

1. CHECK PISTON STROKE OF FIRST AND REVERSE BRAKE (B_3)

(a) Set the dial indicator and SST to the transmission case.

NOTE:
- The SST should be perpendicular to the piston.
- The SST should touch nothing but the piston.

SST 09350-36010 (09350-06120, 09350-06130)

(b) Measure the piston stroke applying and releasing the compressed air (8 kg/cm², 114 psi or 785 kPa) as shown.

NOTE: Measure the piston stroke 2–3 times and take the average value.

Piston stroke: 3.30 – 3.80 mm (0.130 – 0.150 in.)

If the stroke exceeds the limit, replace the clutch discs.

Flange thickness: mm (in.)

No.	Thickness
None	6.65 (0.2618)
1	7.05 (0.2776)
2	7.45 (0.2933)

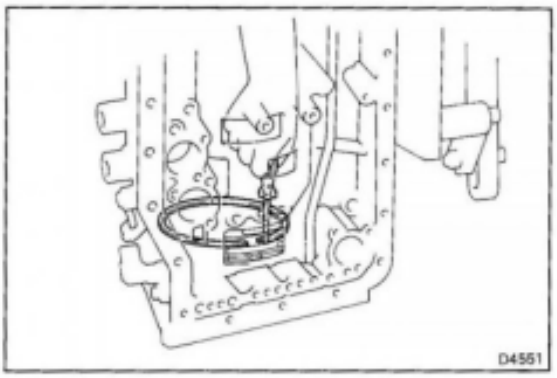

2. REMOVE FLANGE, DISCS, PLATES AND CUSHION PLATE

(a) Remove the snap ring.

(b) Remove the flange, discs, plates and cushion plate. Note the direction of the cushion plate.

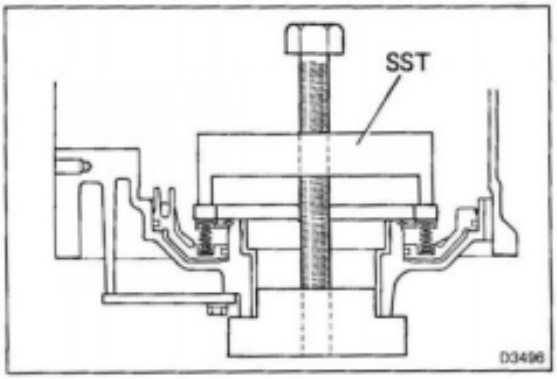

3. COMPRESS RETURN SPRINGS AND REMOVE SPRING RETAINER SNAP RING

(a) Install SST. Compress the springs evenly by tightening the bolt gradually. And remove the snap ring.

SST 09350-36010 (09350-06030)

(b) Remove the first and reverse brake piston return spring assembly.

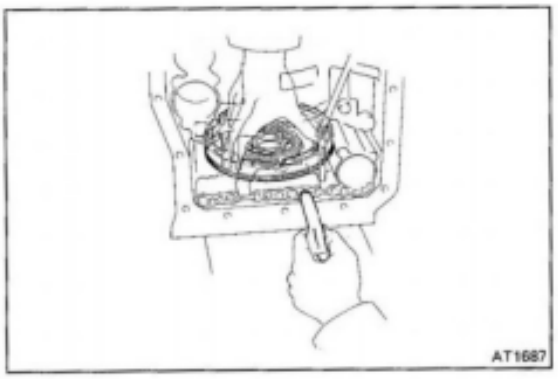

4. REMOVE FIRST AND REVERSE BRAKE PISTON

(a) Apply compressed air into the passage of the case to remove the piston.

(b) If the piston does not pop out with compressed air, use needle-nose pliers to remove it.

(c) Remove the two O-rings from the piston.

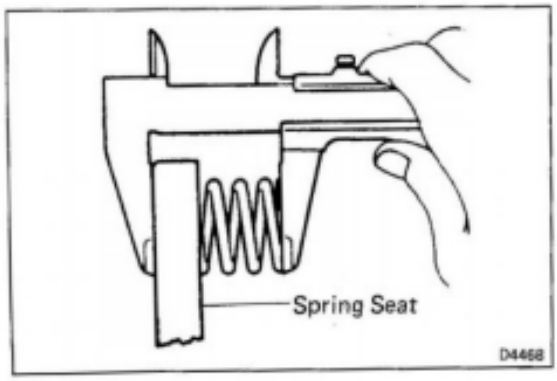

INSPECTION OF FIRST AND REVERSE BRAKE PISTON

1. INSPECT RETURN SPRING

Check for damage, squareness, rust and collapsed coils. Measure the spring free length and replace it if less than that specification.

Free length: 23.9 mm (0.0941 in.)

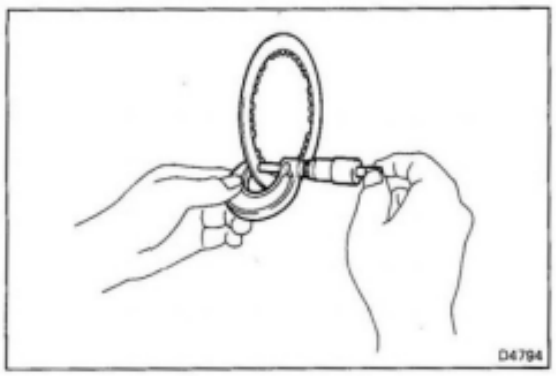

2. CHECK DISCS

Using a micrometer, measure the thickness of the discs.

Minimum thickness: 1.5 mm (0.059 in.)

If the thickness is less than the minimum, replace the discs.

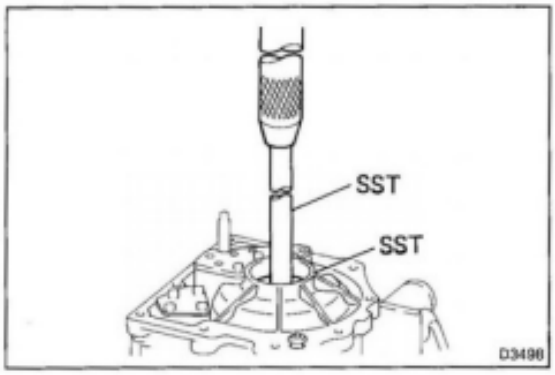

REPLACEMENT OF FRONT OUTPUT SHAFT BEARING

1. REMOVE FRONT OUTPUT SHAFT BEARING

Using SST, press out the front bearing from the transmission case.

SST 09350-36010 (09350-06050, 09350-06070)

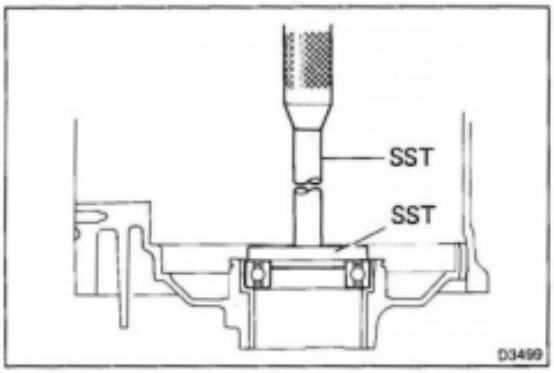

2. INSTALL FRONT OUTPUT SHAFT BEARING

Using SST, press in the front bearing to the transmission case.

SST 09350-36010 (09350-06050, 09350-06060)

NOTE: Check that the bearing rotates smoothly.

ASSEMBLY OF FIRST AND REVERSE BRAKE PISTON

(See page AT-82)

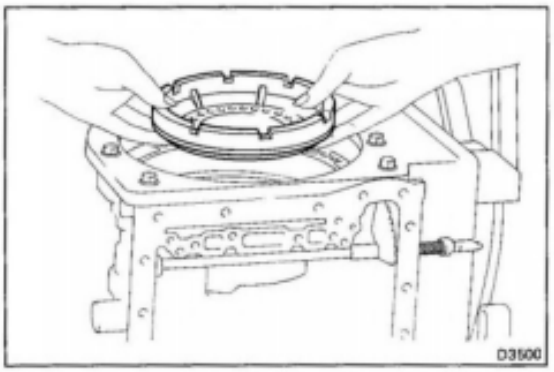

1. INSTALL FIRST AND REVERSE BRAKE PISTON

(a) Apply ATF to the two new O-rings, and install it to the piston.

(b) Install the first and reverse brake piston to the transmission case.

NOTE:
- Install the O-ring taking care not to damage screw.
- Using the side of a hammer, evenly press in the piston.

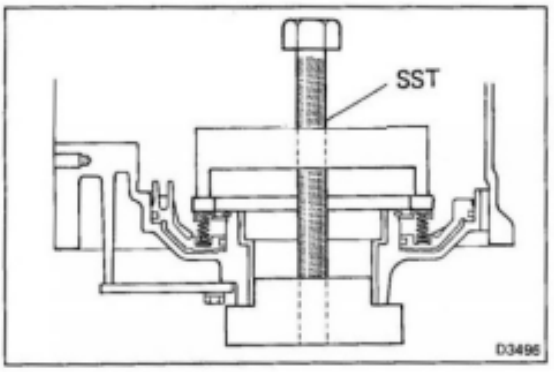

2. INSTALL PISTON RETURN SPRING ASSEMBLY AND SNAP RING

(a) Place SST base under case.

(b) Install the return spring, new snap ring and SST to the case.

(c) Using SST, compress the springs evenly by tightening the bolt gradually.

SST 09350-36010 (09350-06030)

(d) Install the snap ring and remove SST.

CAUTION: Avoid overtightening the bolt and bearing the spring retainer.

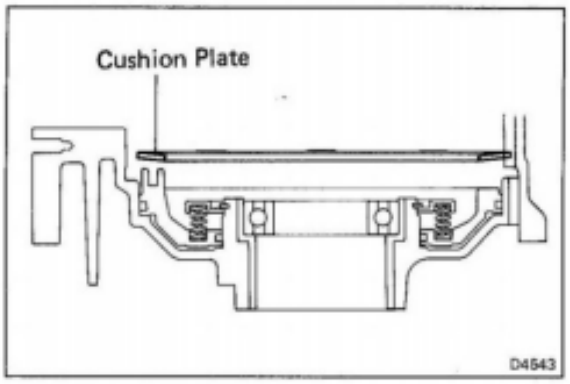

3. **INSTALL CUSHION PLATE, PLATES, DISCS AND FLANGE**

(a) Install the cushion plate. Confirm the proper direction of the cushion plate.

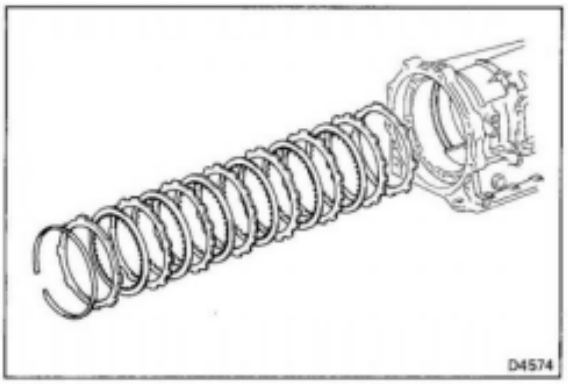

(b) Install the plates, discs and flange.
Install in order:
Plate–disc–plate–disc–plate–disc–plate–disc–plate–disc–plate–disc–flange

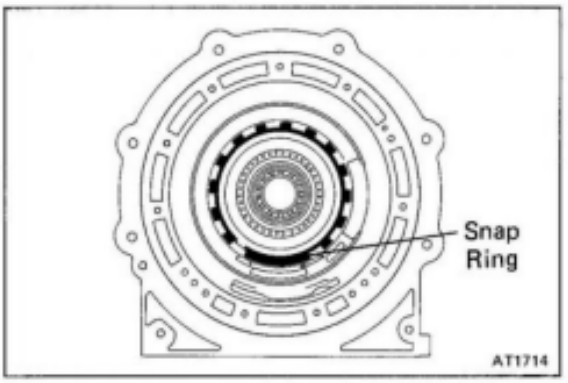

(c) Install the snap ring.

NOTE: Be sure the end gap of the snap ring is not aligned with one of the cutouts.

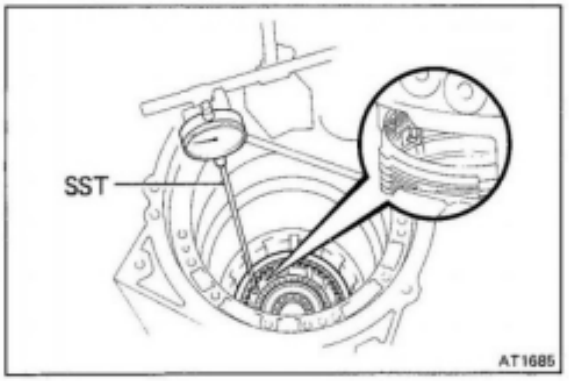

4. **RECHECK PISTON STROKE OF FIRST AND REVERSE BRAKE**

(a) Set a dial indicator and SST to the transmission case.

NOTE:
- The SST should be perpendicular to the piston.
- The SST should touch nothing but the piston.

SST 09350-36010 (09350-06120, 09350-06130)

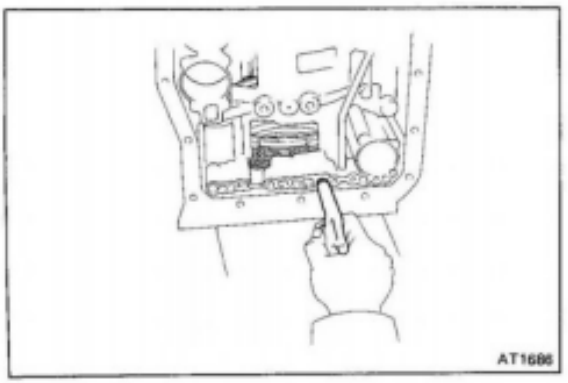

(b) Measure the piston stroke by applying and releasing the compressed air (8 kg/cm², 114 psi or 785 kPa) as shown.

NOTE: Measure the piston stroke 2–3 times and take the average value.

Piston stroke: 3.30 – 3.80 mm (0.130 – 0.150 in.)

If the stroke exceeds the limit, replace the clutch discs and recheck the piston stroke.

If the piston stroke is less than the limit, parts may be improperly assembled and require reassembly.

If the piston stroke nonstandard, select another flange.

Flange thickness: mm (in.)

No.	Thickness
None	6.65 (0.2618)
1	7.05 (0.2776)
2	7.45 (0.2933)

GOVERNOR VALVE ASSEMBLY

COMPONENTS

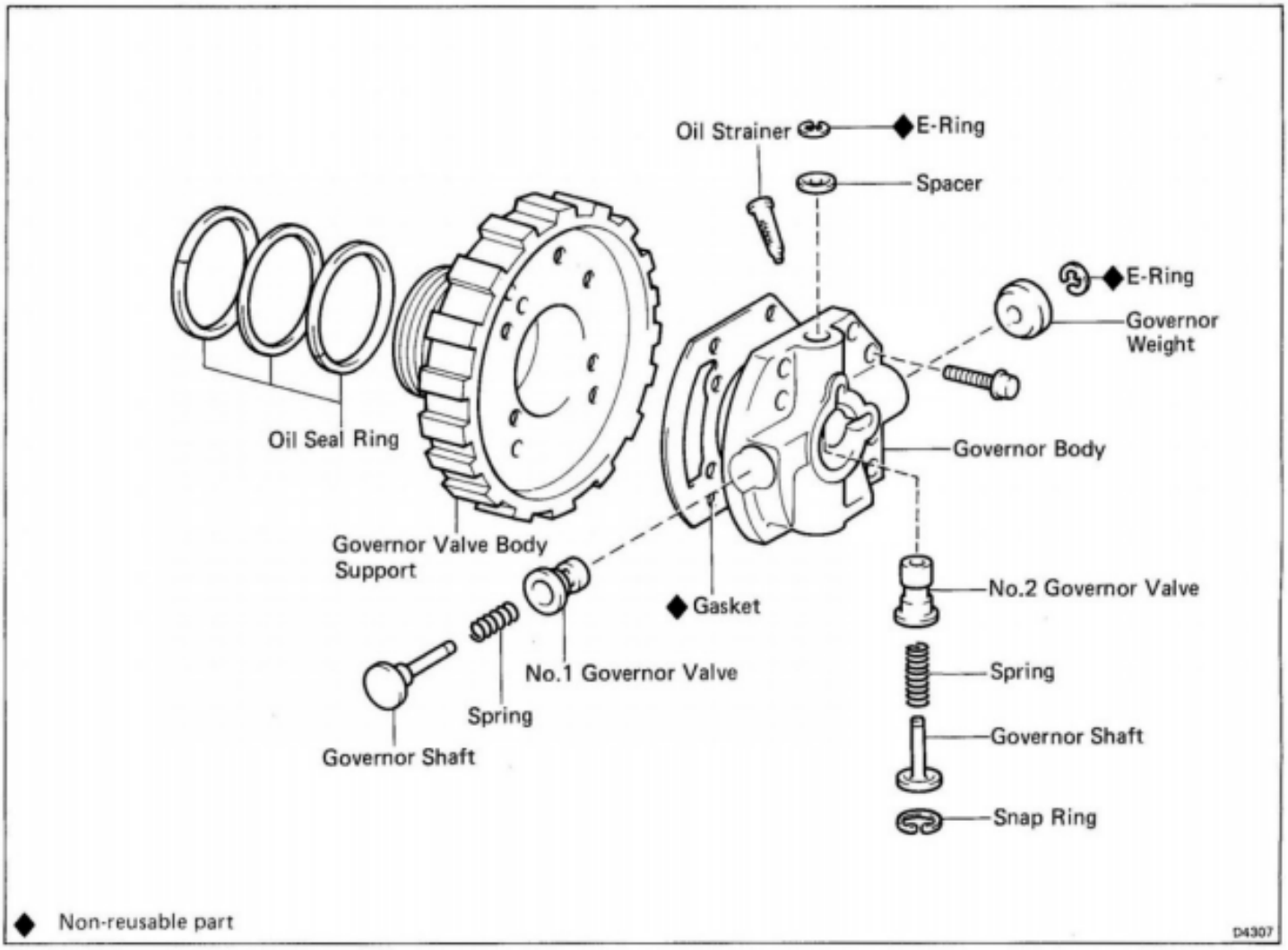

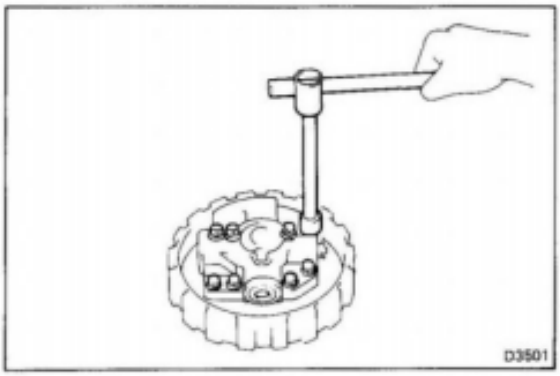

DISASSEMBLY OF GOVERNOR VALVE ASSEMBLY

1. REMOVE GOVERNOR VALVE BODY

Remove the eight bolts and governor valve body from the body support.

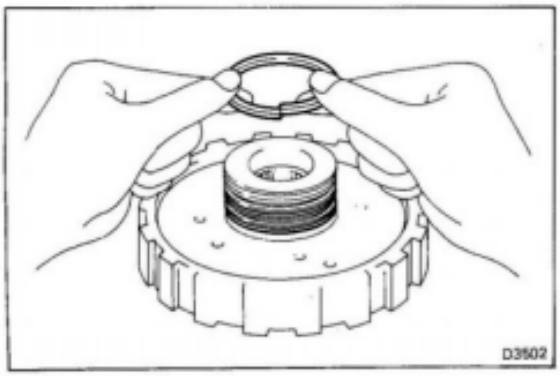

2. REMOVE OIL SEAL RINGS

Remove the three oil seal rings from the body support.

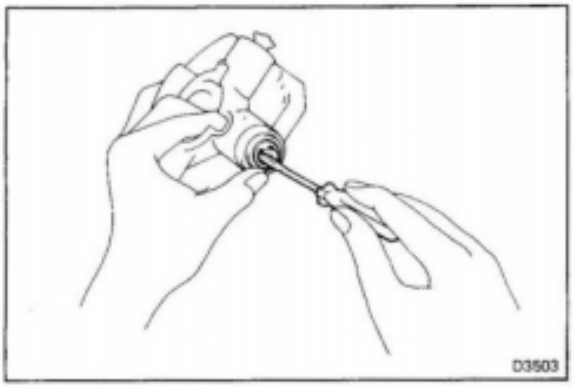

3. REMOVE NO. 1 GOVERNOR VALVE

(a) While pushing the weight and valve shaft, remove the E-ring.

NOTE: Do not spread the ring ends more than necessary.

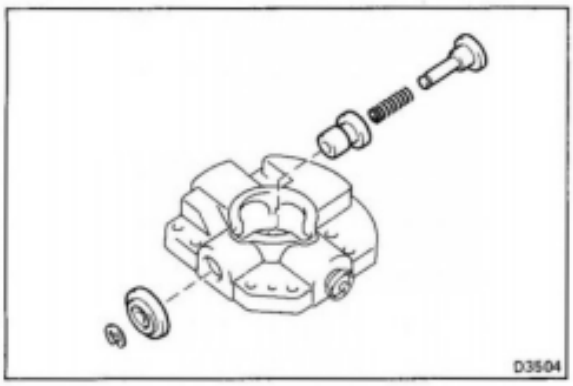

(b) Remove the governor weight from the governor body outside.

(c) Remove the valve shaft, spring and No.1 governor valve from the body inside.

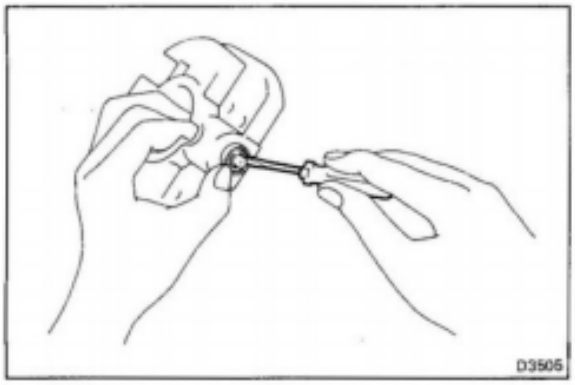

4. REMOVE NO. 2 GOVERNOR VALVE

(a) While pushing the spacer, remove the E-ring and spacer.

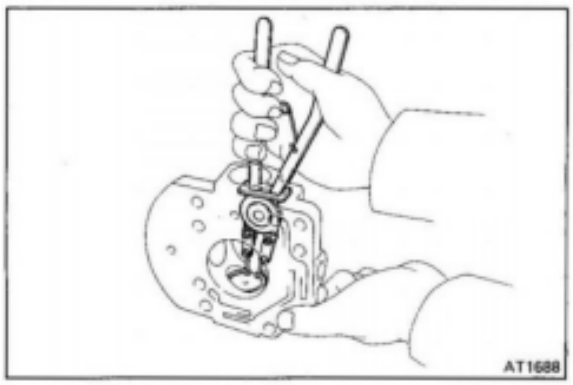

(b) Remove the snap ring from the body inside.

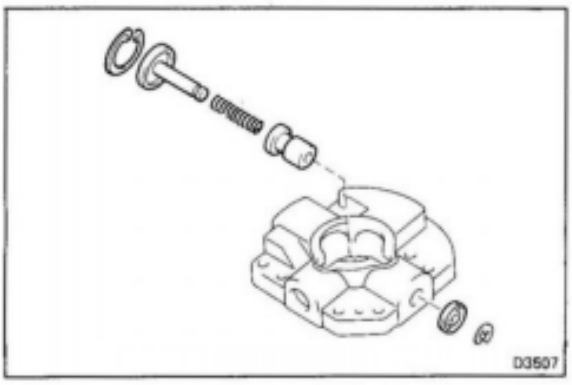

(c) Remove the valve shaft, spring and No. 2 governor valve from the body inside.

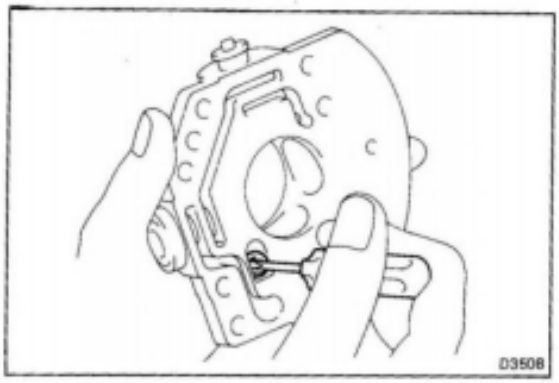

5. REMOVE GOVERNOR OIL STRAINER

Using a screwdriver, remove the oil strainer.

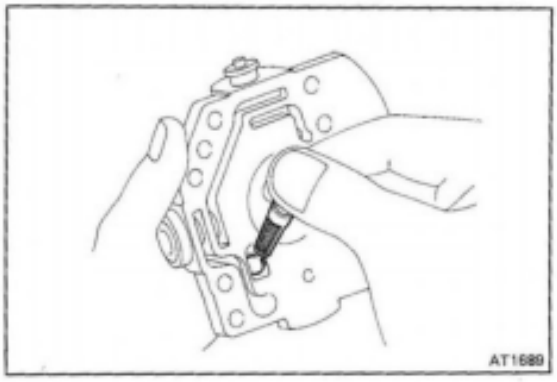

ASSEMBLY OF GOVERNOR VALVE ASSEMBLY

(See page AT-87)

1. INSTALL GOVERNOR OIL STRAINER

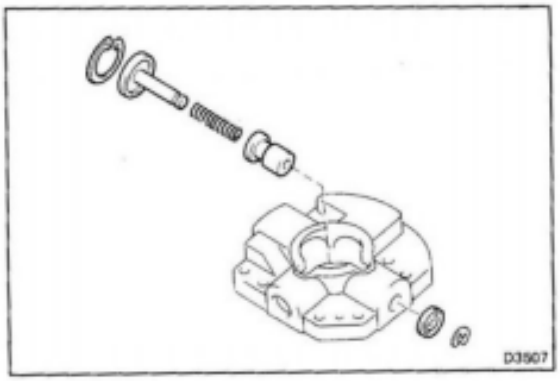

2. INSTALL NO. 2 GOVERNOR VALVE

(a) Coat the ATF to the No. 2 governor valve and valve shaft.

(b) Install the No. 2 governor valve, spring and valve shaft to the body inside.

NOTE: Confirm that the governor valve moves smoothly.

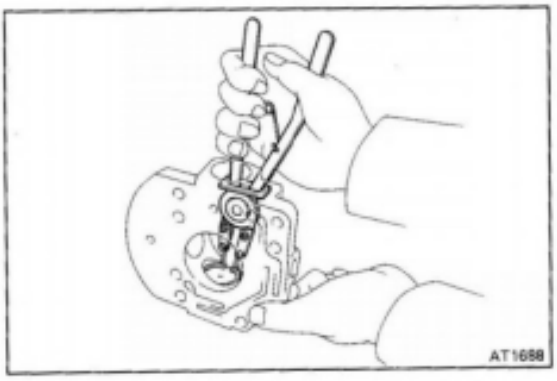

(c) Install the snap ring to the body.

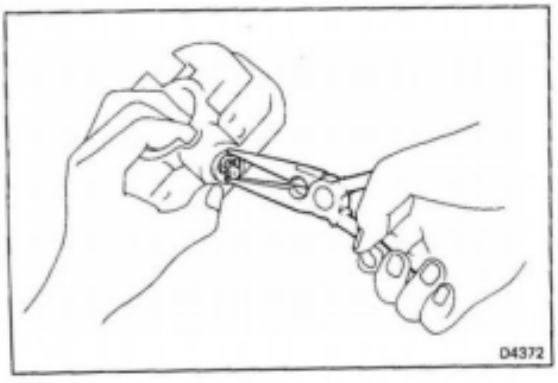

(d) Install the spacer.

(e) While pushing the spacer install a new E-ring.

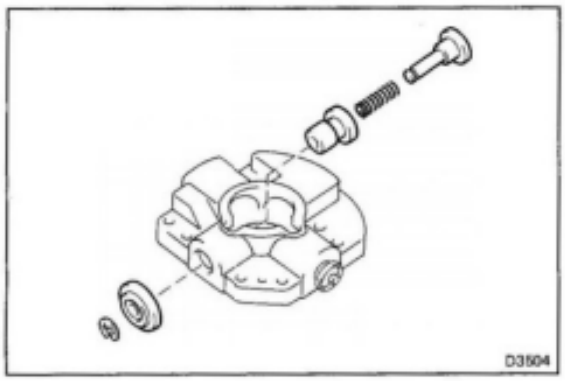

3. INSTALL NO. 1 GOVERNOR VALVE

(a) Coat ATF to the No.1 governor valve and shaft.

(b) Install the No.1 governor valve, spring and valve shaft to the body inside.

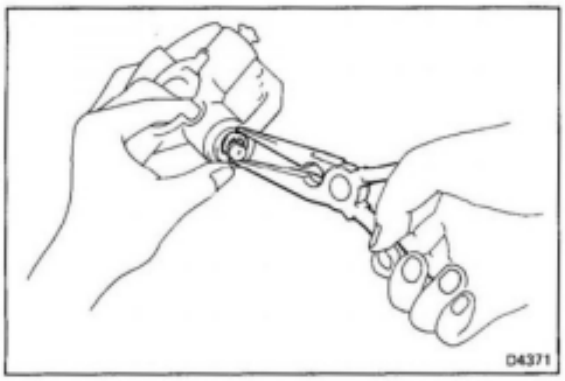

(c) Install the governor weight.

(d) While pushing the governor weight and No.1 governor valve, install the E-ring.

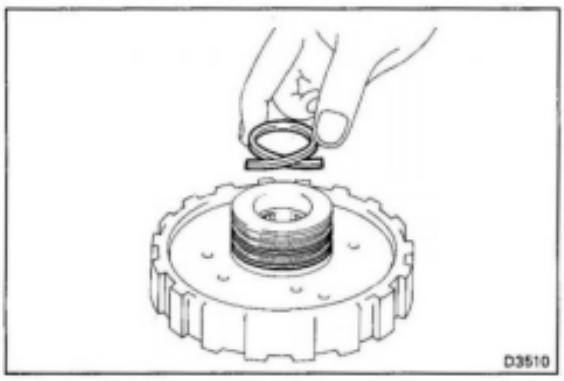

4. INSTALL NEW OIL SEAL RINGS

(a) Coat ATF to the three oil seal rings.

(b) Install the three oil seal ring to the body support.

NOTE: After installing the oil seal rings, check that they move smoothly.

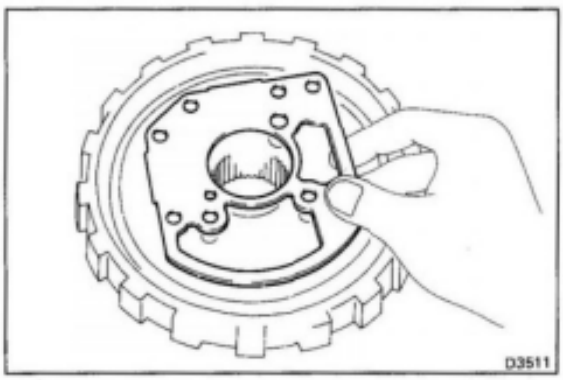

5. INSTALL GOVERNOR VALVE BODY

(a) Coat ATF to the new gasket, and install it to the body support.

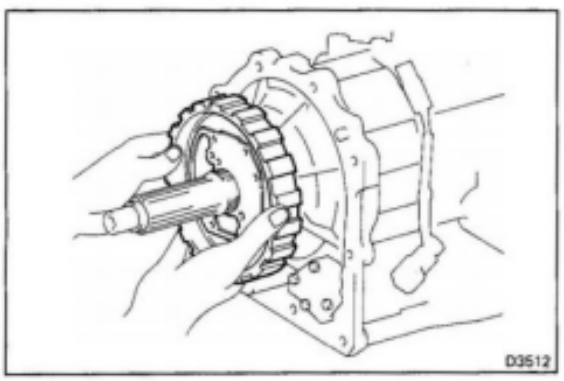

(b) Install the body support to the output shaft.

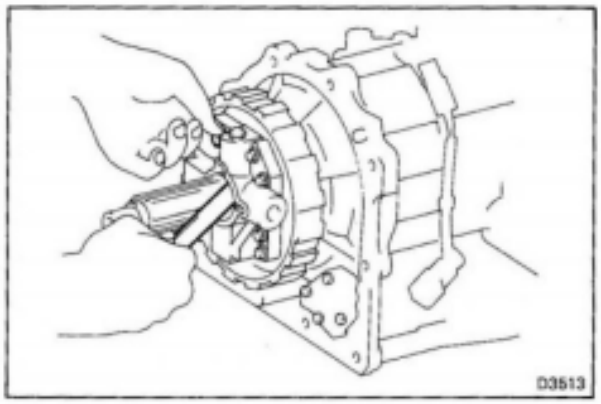

(c) Temporarily install the governor body to the body support.

(d) Insert a 0.01 mm thickness gauge between the output shaft and governor valve body and temporarily tighten the bolts.

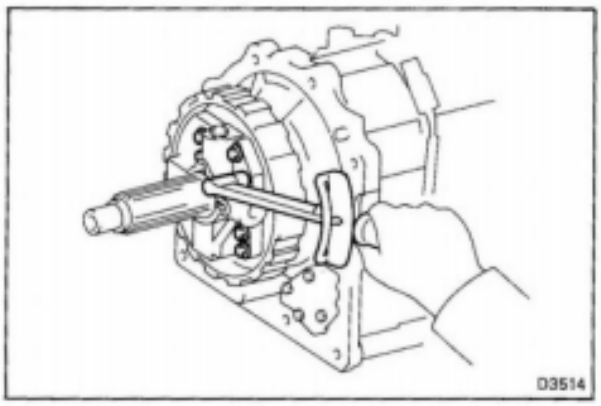

(e) Confirm that the gap between the output shaft and governor valve body are even.

(f) Torque the eight bolts.

Torque: 100 kg-cm (7 ft-lb, 10 N·m)

VALVE BODY

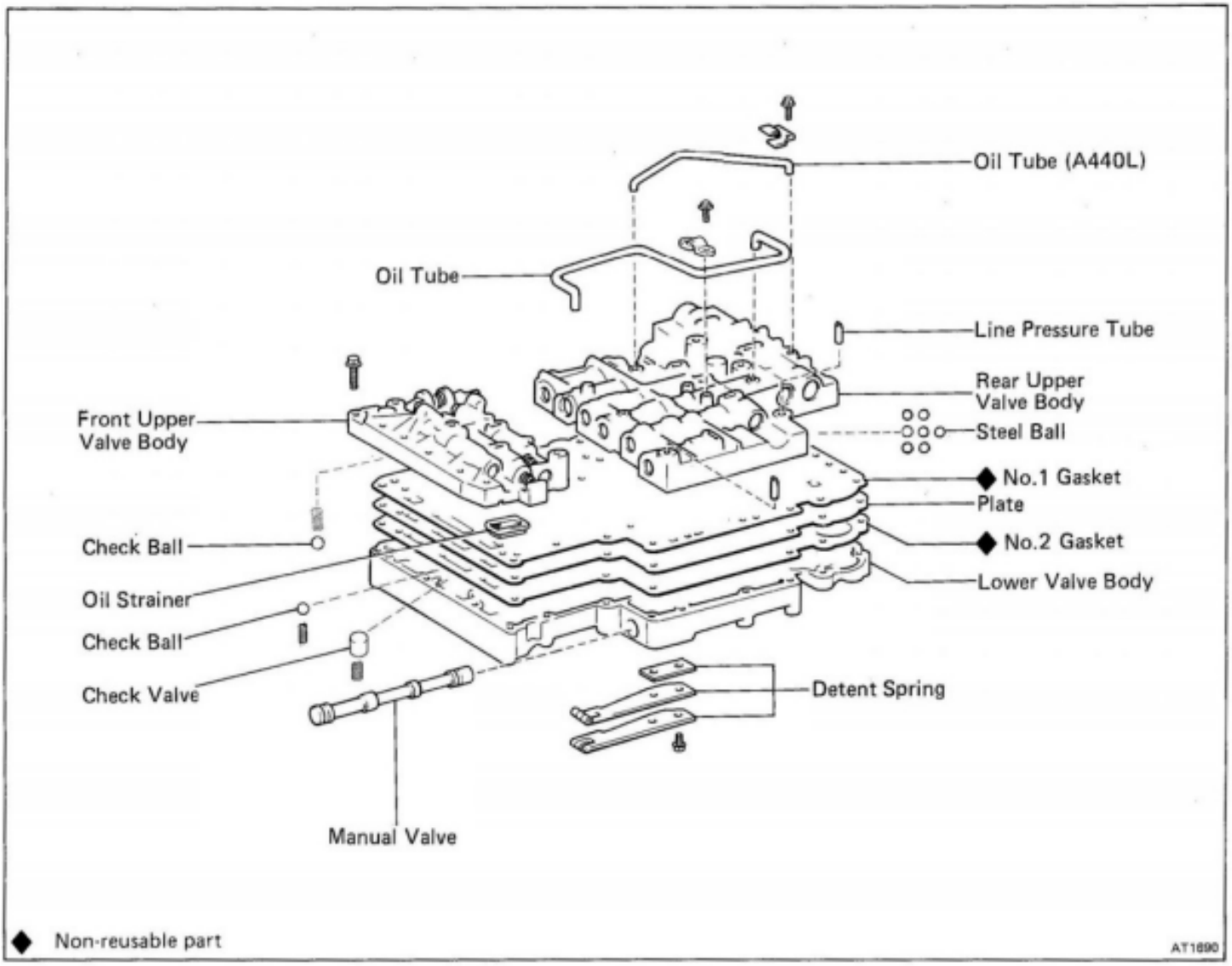

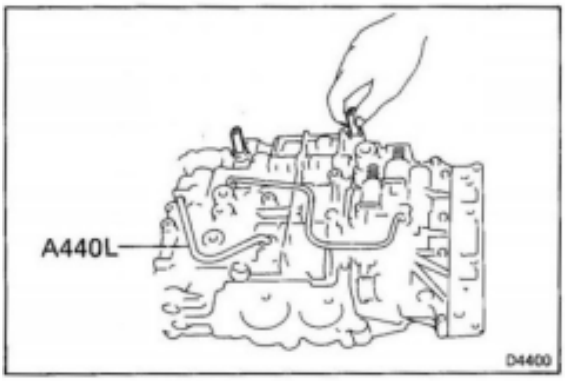

DISASSEMBLY OF VALVE BODY

1. REMOVE TWO LINE PRESSURE TUBES

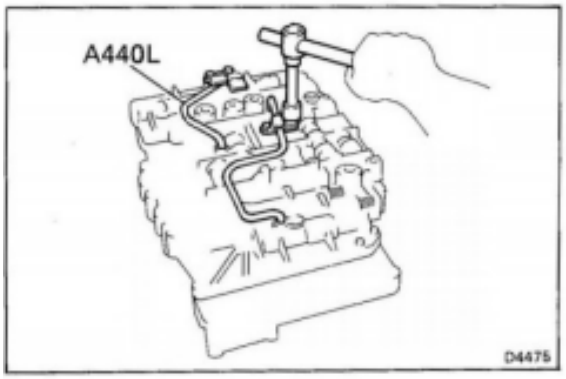

2. REMOVE OIL TUBE

(a) Remove the clamp from the valve body.

(b) Pry up both tube ends with a large screwdriver and remove the tubes.

A440L : Two tubes
A440F : One tube

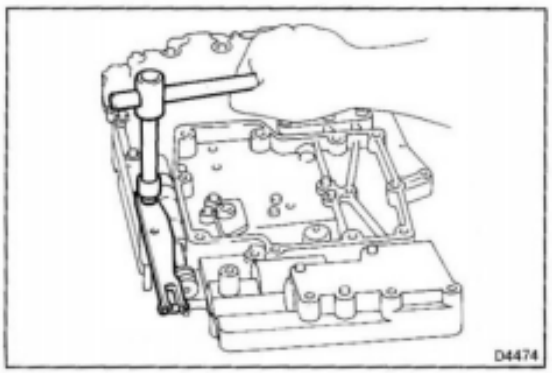

3. TURN OVER ASSEMBLY AND REMOVE DETENT SPRING

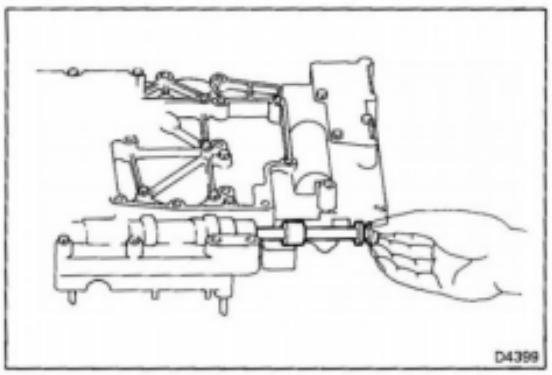

4. REMOVE MANUAL VALVE

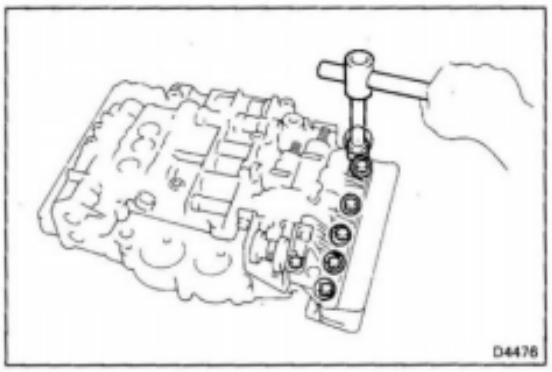

5. TURN OVER ASSEMBLY AND REMOVE SEVEN BOLTS FROM FRONT UPPER VALVE BODY

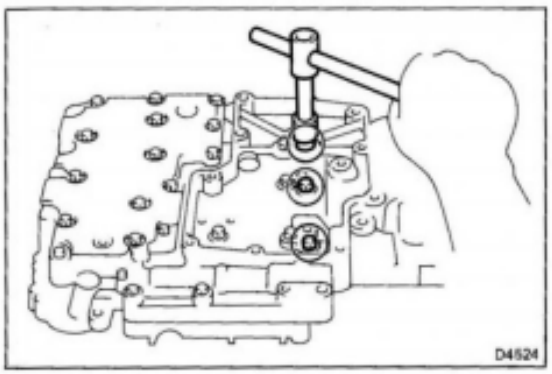

6. TURN OVER ASSEMBLY AND REMOVE THREE BOLTS FROM LOWER VALVE BODY

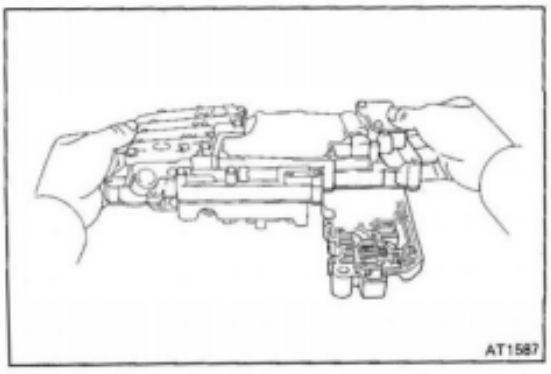

7. LIFT OFF LOWER VALVE BODY AND REAR UPPER VALVE BODY

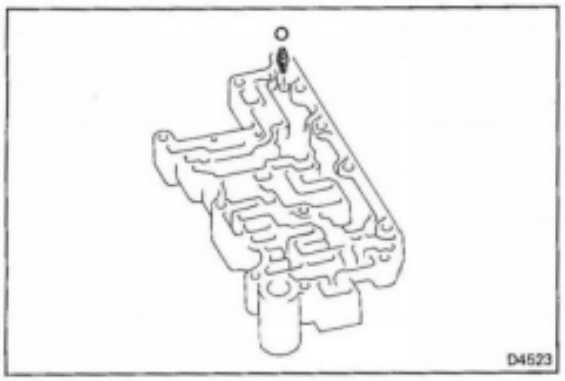

8. REMOVE CHECK BALL AND SPRING

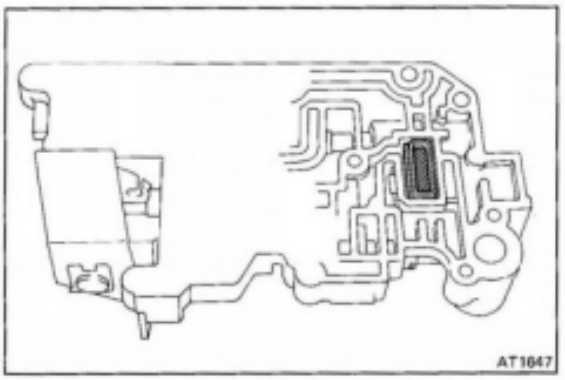

9. REMOVE OIL STRAINER

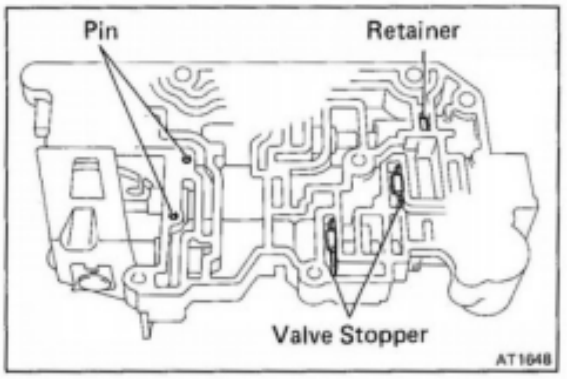

10. CONFIRM RETAINER, TWO VALVE STOPPERS AND TWO PINS ARE INSTALLED CORRECTLY

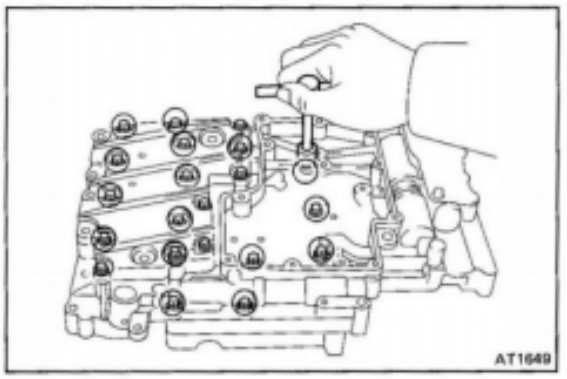

11. REMOVE SIXTEEN BOLTS FROM LOWER VALVE BODY

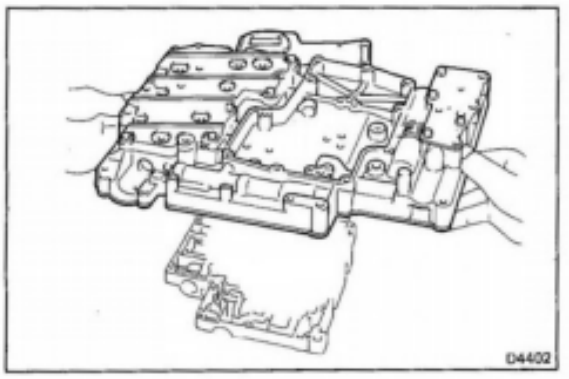

12. LIFT OFF LOWER VALVE BODY AND PLATE AS A SINGLE UNIT

Hold the valve body plate to the lower valve body.

NOTE: Be careful that the check valve and keys do not fall out.

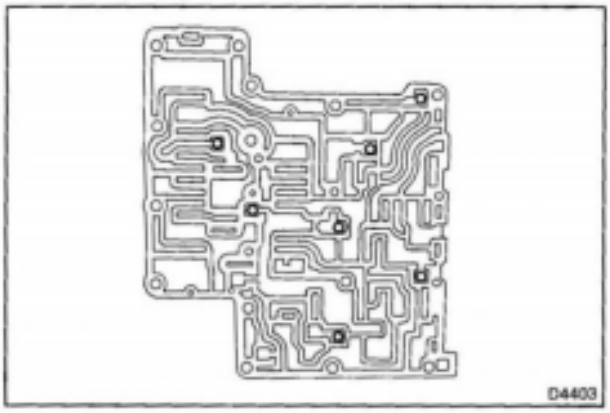

13. REMOVE SEVEN CHECK BALLS

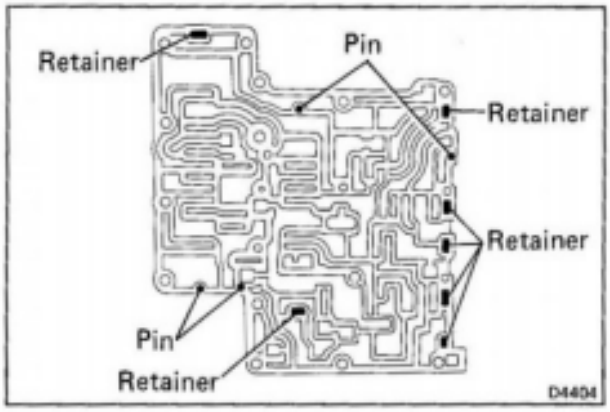

14. CONFIRM FOUR PINS AND SEVEN RETAINERS ARE INSTALLED CORRECTLY

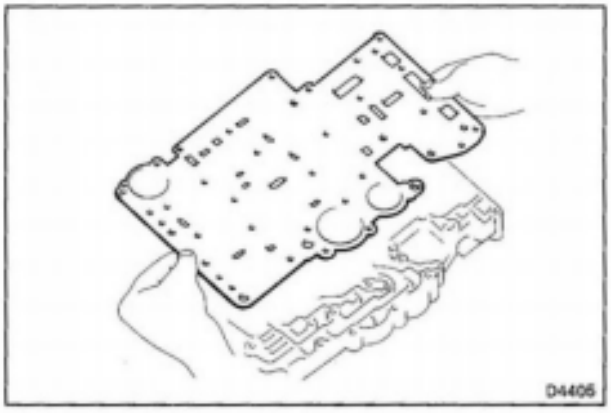

15. REMOVE PLATE AND GASKETS FROM LOWER VALVE BODY

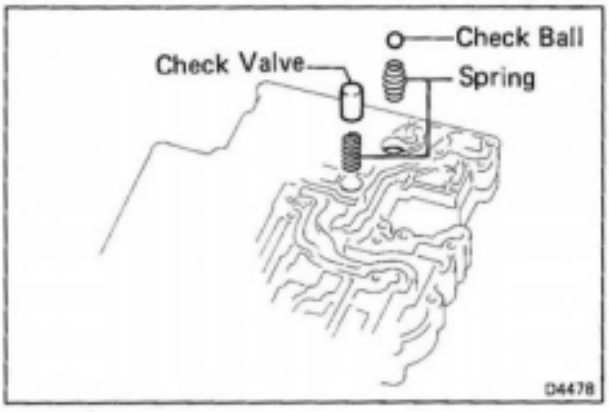

16. REMOVE CHECK BALL, VALVE AND TWO SPRINGS

Front Upper Valve Body

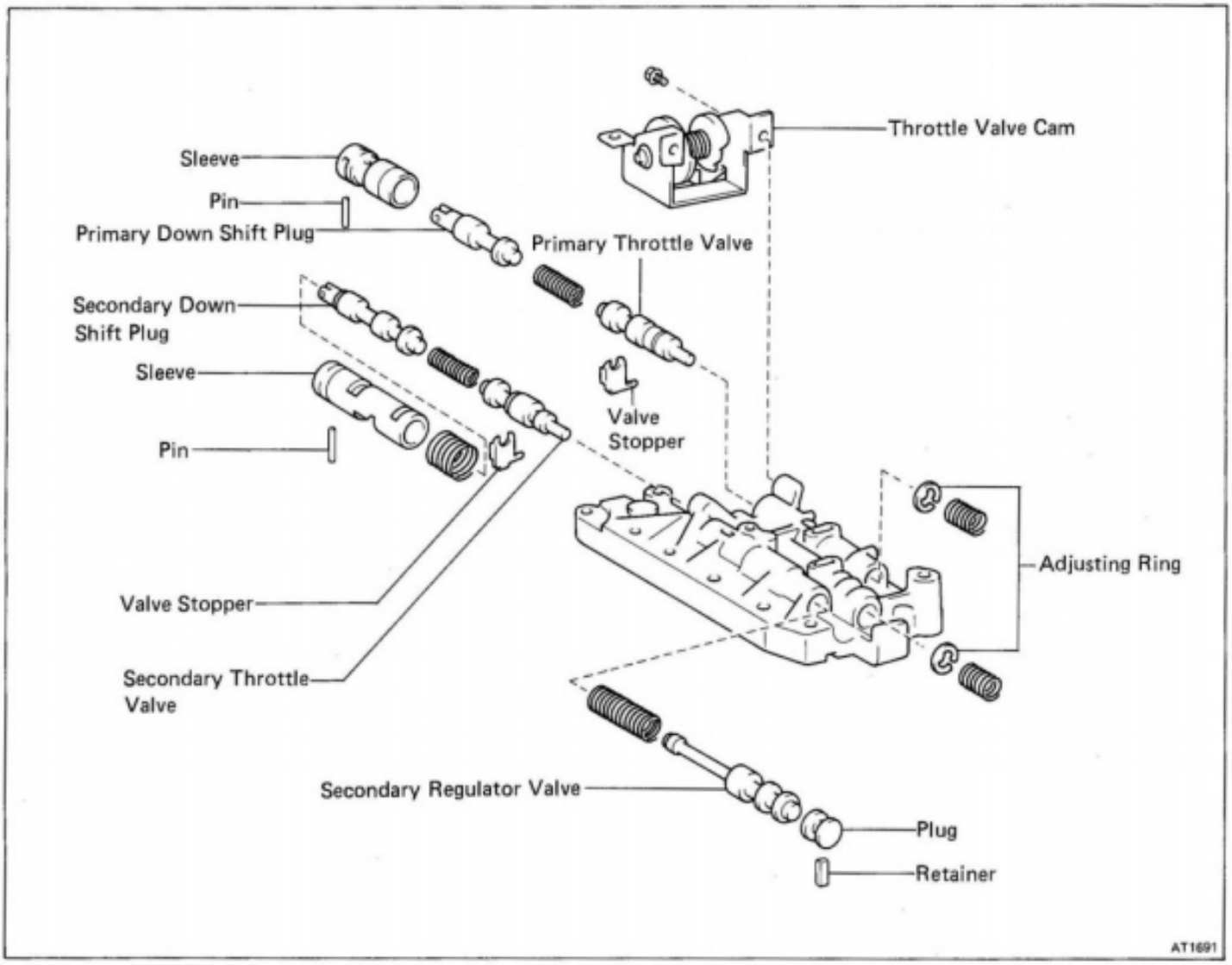

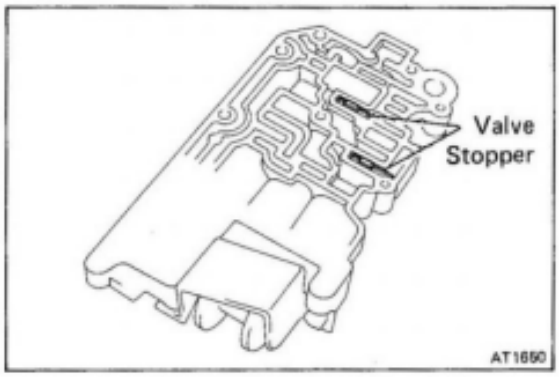

DISASSEMBLY OF FRONT UPPER VALVE BODY

1. REMOVE TWO VALVE STOPPERS

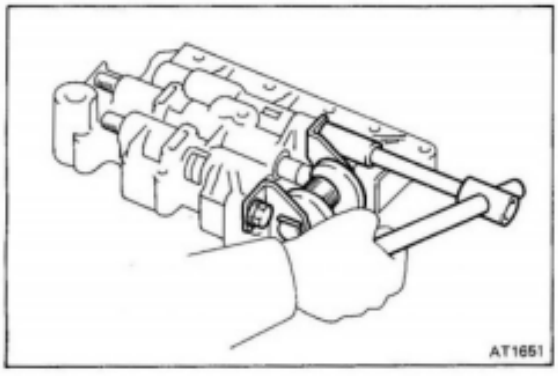

2. REMOVE THROTTLE VALVE CAM

NOTE: Note the number of shims installed.

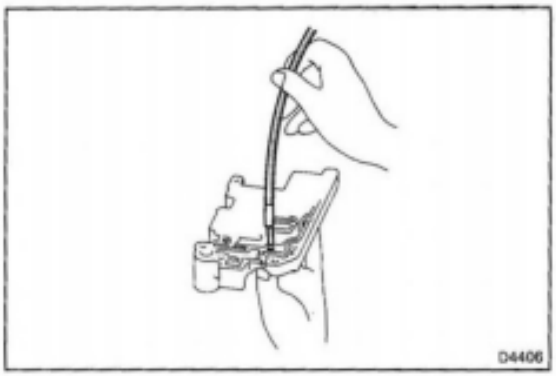

3. REMOVE SECONDARY REGULATOR VALVE

(a) Remove the retainer with a magnetic finger by pushing in the plug.

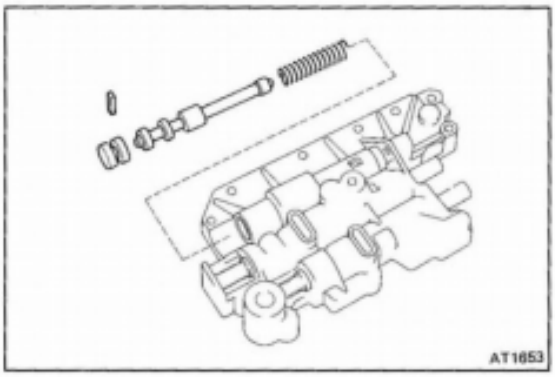

(b) Remove the plug, secondary regulator valve and spring.

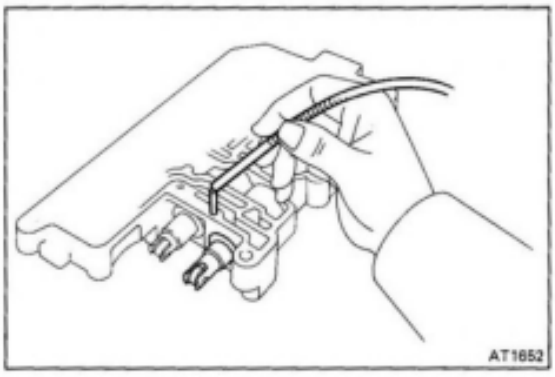

4. REMOVE PRIMARY THROTTLE VALVE

(a) Remove the pin with a magnetic finger.

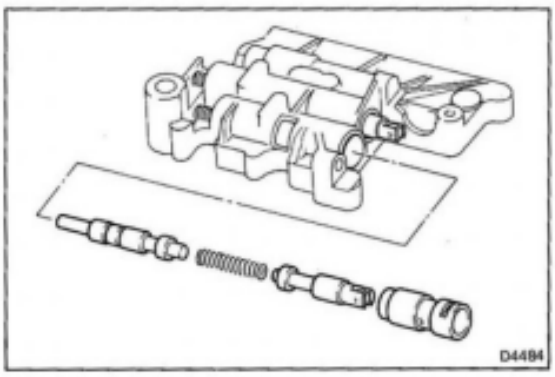

(b) Remove the sleeve, plug, spring and primary throttle valve.

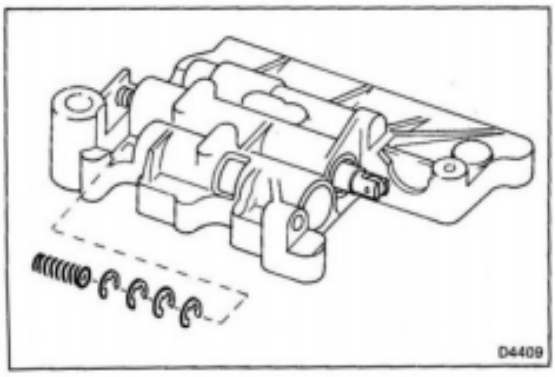

(c) Remove the spring and adjusting rings.

NOTE: Note the number of adjusting rings installed.

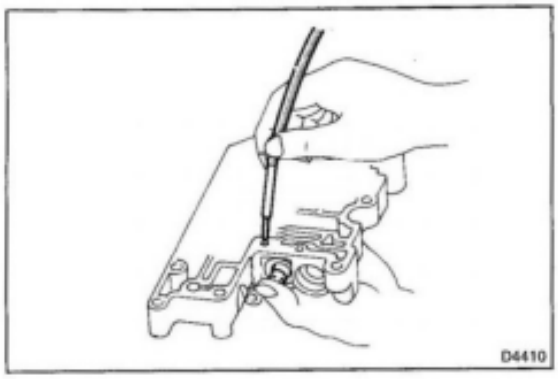

5. REMOVE SECONDARY THROTTLE VALVE

(a) Remove the pin with a magnetic finger by pushing in the sleeve.

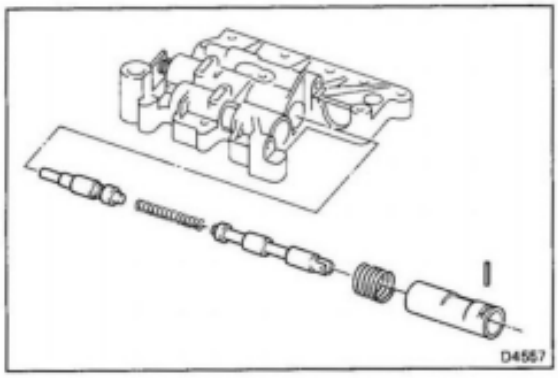

(b) Remove the sleeve, plug, secondary throttle valve and two springs.

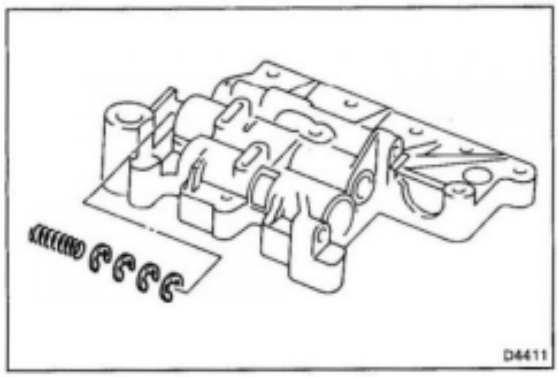

(c) Remove the spring and adjusting rings.

NOTE: Note the number of adjusting rings installed.

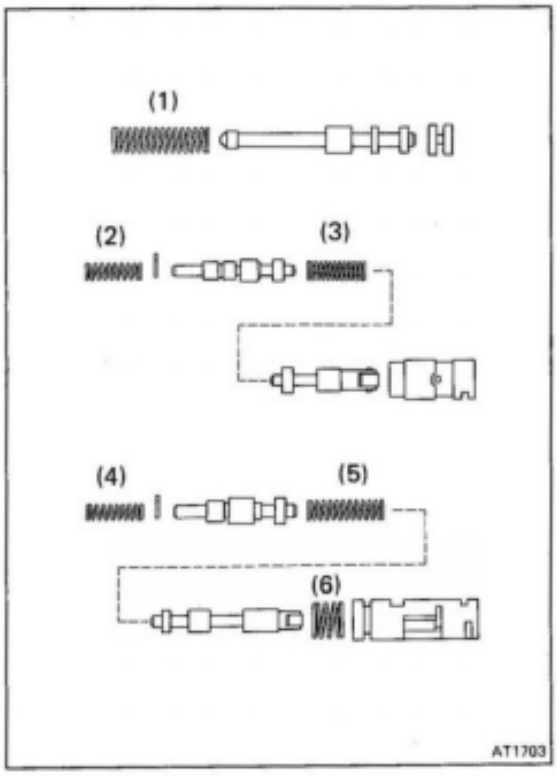

INSPECTION OF FRONT UPPER VALVE BODY

INSPECT VALVE SPRINGS

Check for damage, squareness, rust and distorted coils. Measure the spring free height and replace if less than that shown below.

Spring	Free length mm (in.)	
(1) Secondary regulator valve	46.00 (1.8110)	
(2) Primary throttle valve	25.30 (0.9961)	
(3) Primary down shift plug	26.85 (1.0571)	
(4) Secondary throttle valve	25.30 (0.9961)	
(5) Secondary down shift plug	HJ	32.78 (1.2905)
	FJ	32.57 (1.2823)
(6) Sleeve	10.80 (0.4252)	

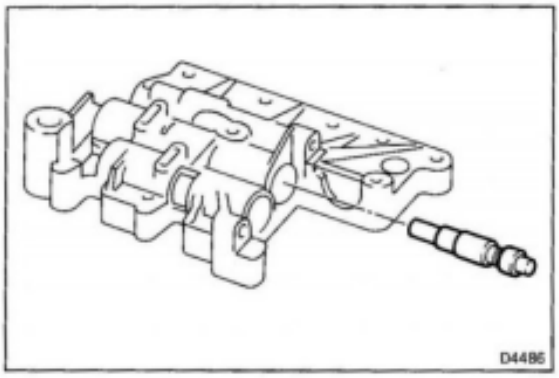

ASSEMBLY OF FRONT UPPER VALVE BODY

(See page AT-96)

1. INSTALL SECONDARY THROTTLE VALVE

(a) Insert the secondary throttle valve into the bore.

NOTE: Check that valve is fully installed into the bore.

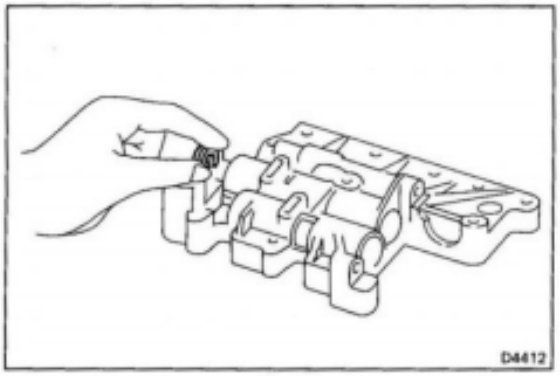

(b) Install the same number of adjusting rings as were removed during disassembly.

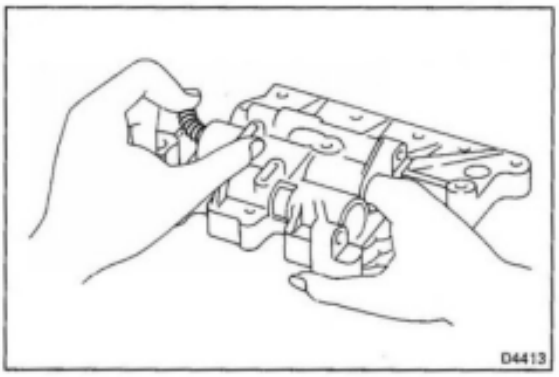

(c) Hold the valve by your finger and install the spring onto the end of the valve shaft.

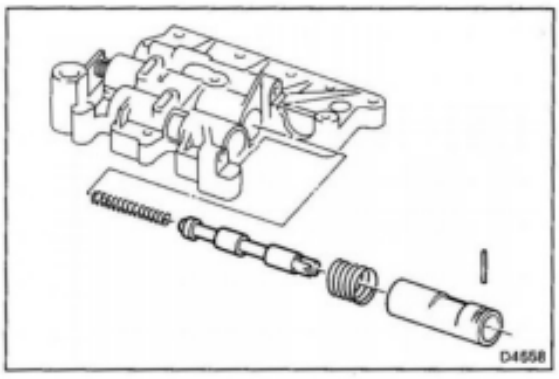

(d) Install the secondary down shift plug, sleeve and two springs.

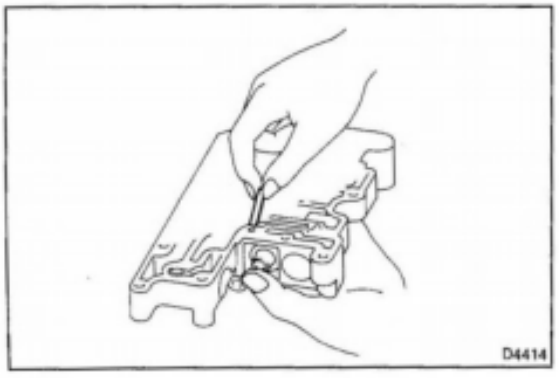

(e) Install the pin by pushing in the sleeve.

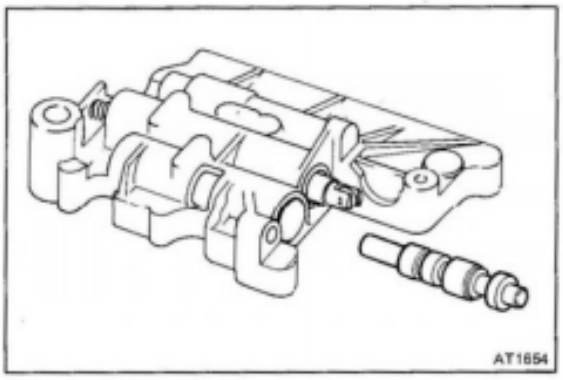

2. INSTALL PRIMARY THROTTLE VALVE

(a) Insert the primary throttle valve into the bore.

NOTE: Check that valve is fully installed into the bore.

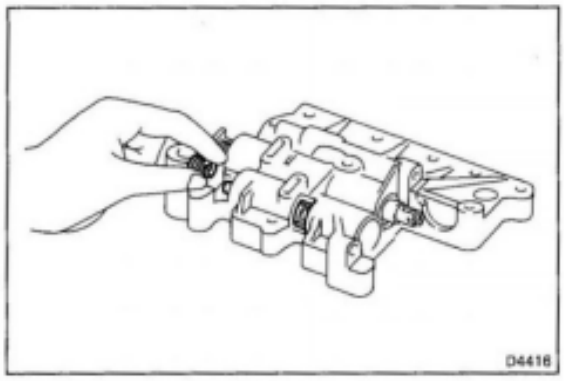

(b) Install the same number of adjusting rings as were removed during disassembly.

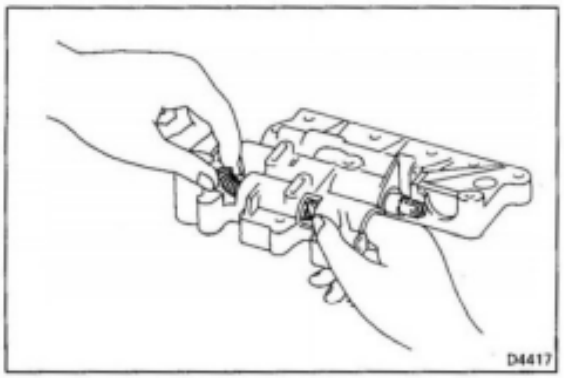

(c) Hold the valve by your finger and install the spring onto the end of the valve shaft.

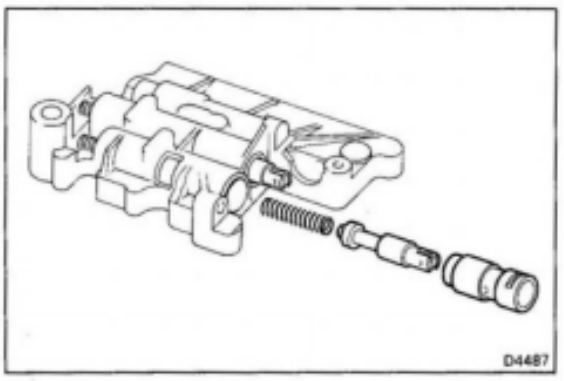

(d) Install the spring, primary down shift plug and sleeve.

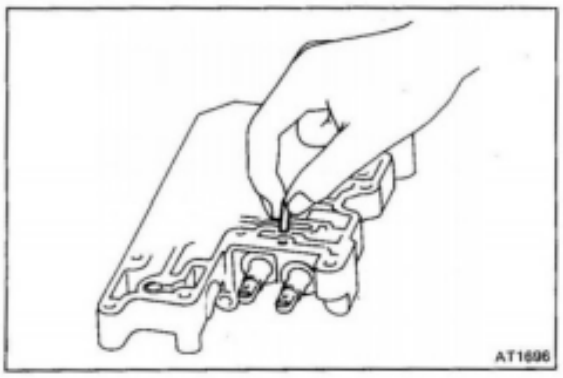

(e) Install the pin.

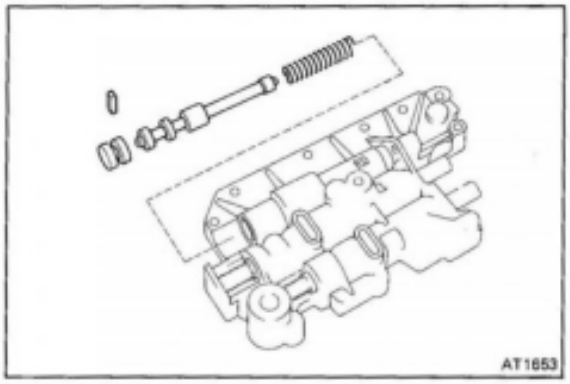

3. INSTALL SECONDARY REGULATOR VALVE

(a) Install the spring, secondary regulator valve and plug.

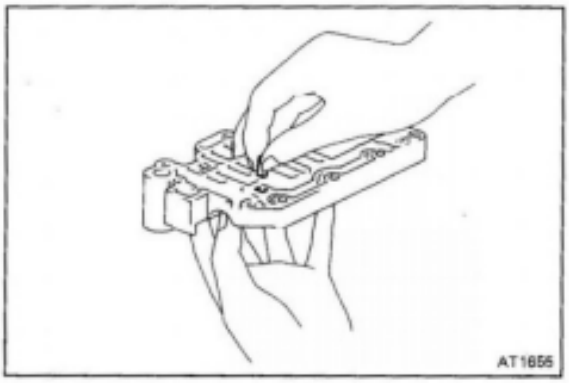

(b) Install the retainer by pushing in the plug.

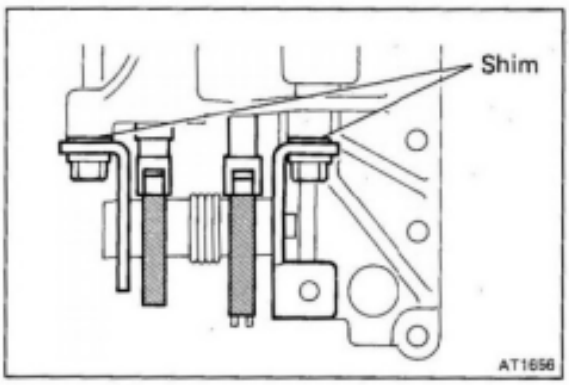

4. INSTALL THROTTLE VALVE CAM

(a) Assemble the shim and throttle valve cam to the valve body so the plug roller is at the center of the cam.

NOTE: Install the same number of the shims as were removed during disassembly.

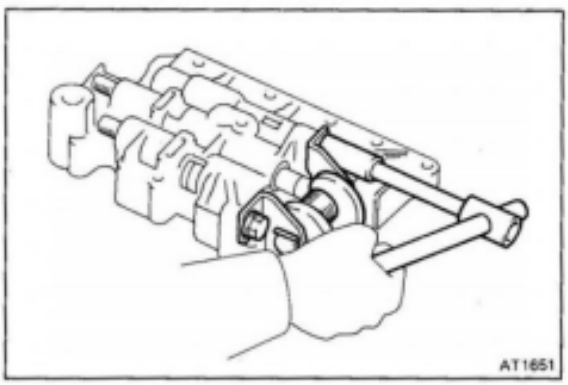

(b) Install and torque the bolts.

Torque: 100 kg-cm (7 ft-lb, 10 N·m)

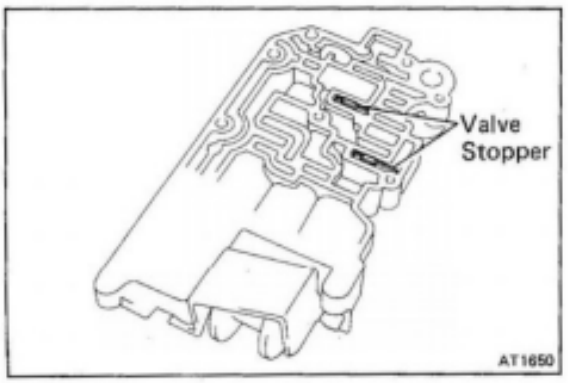

5. INSTALL TWO VALVE STOPPERS

Rear Upper Valve Body

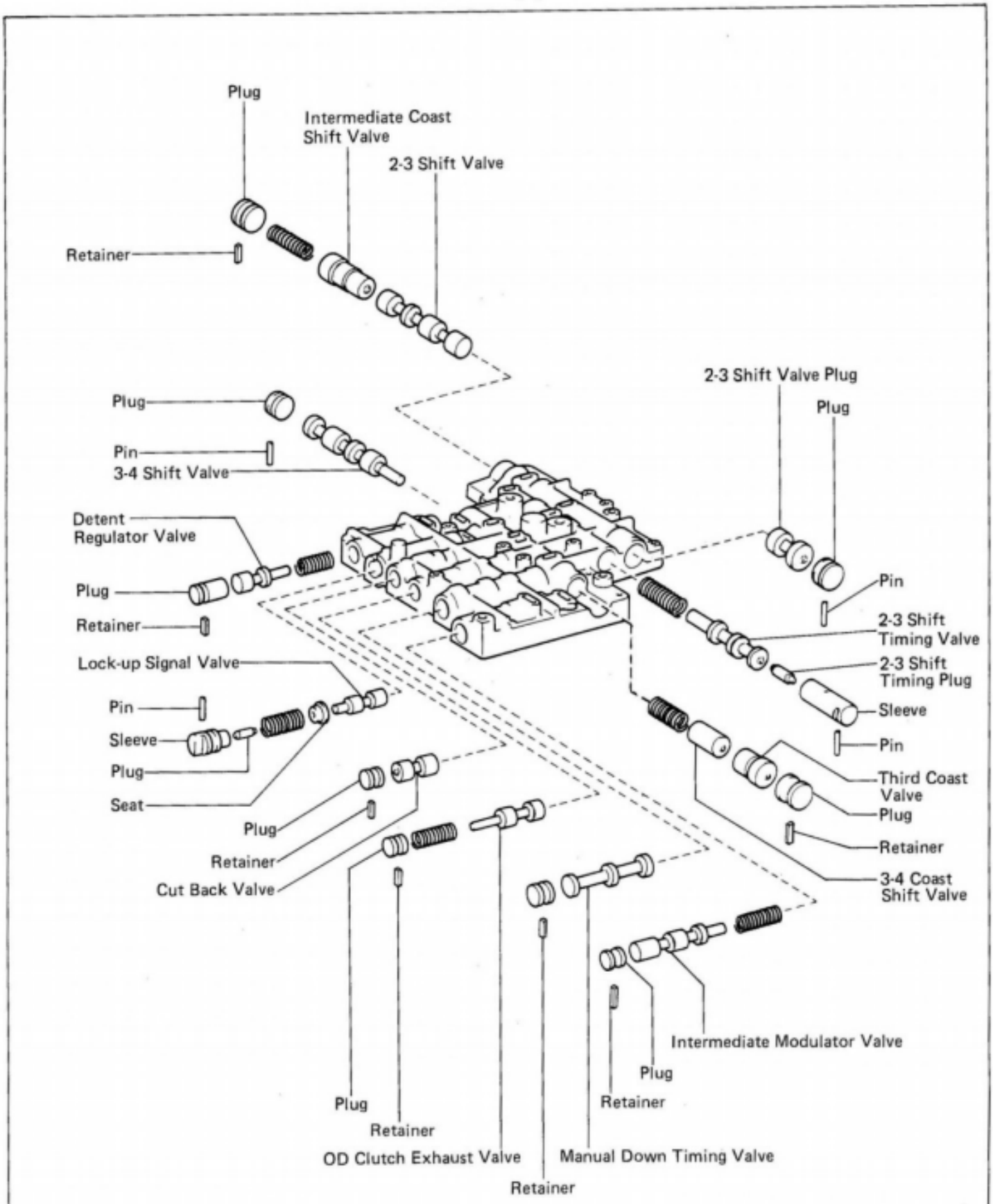

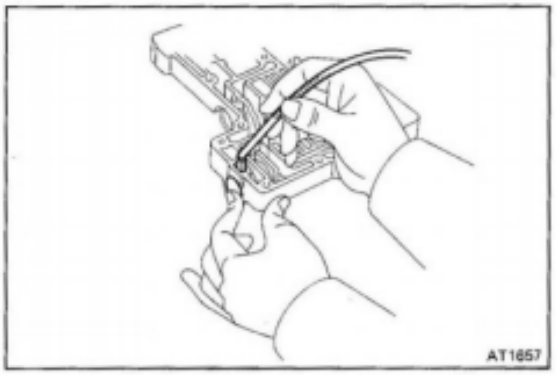

DISASSEMBLY OF REAR UPPER VALVE BODY

1. REMOVE 2-3 SHIFT VALVE

(a) Remove the retainer with a magnetic finger by pushing in the plug.

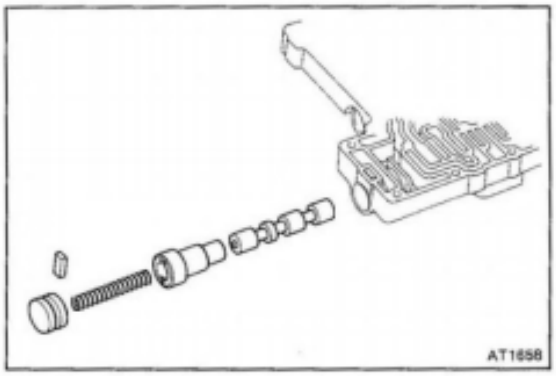

(b) Remove the plug, spring, intermediate coast shift valve and 2-3 shift valve.

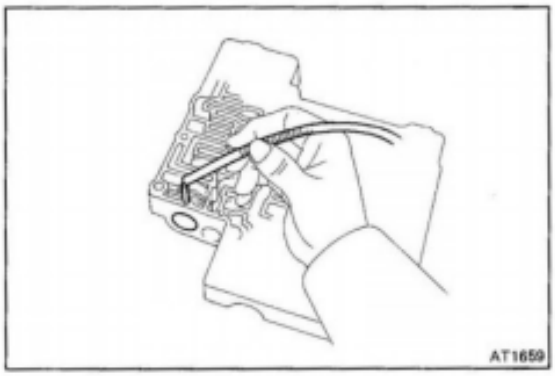

2. REMOVE 2-3 SHIFT VALVE PLUG

(a) Remove the pin with the magnetic finger.

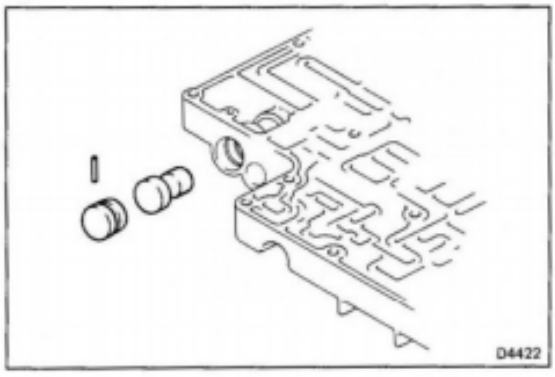

(b) Remove the plug and 2-3 shift valve plug.

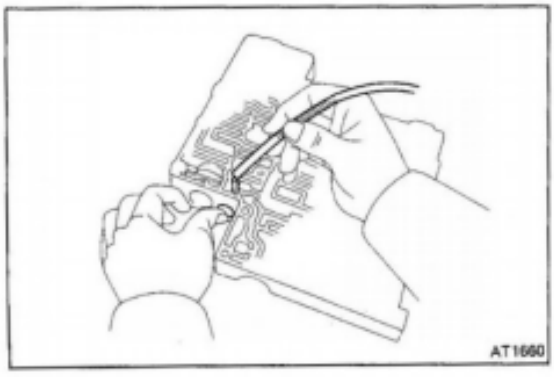

3. REMOVE 2-3 SHIFT TIMING VALVE

(a) Remove the pin with a magnetic finger by pushing in the sleeve.

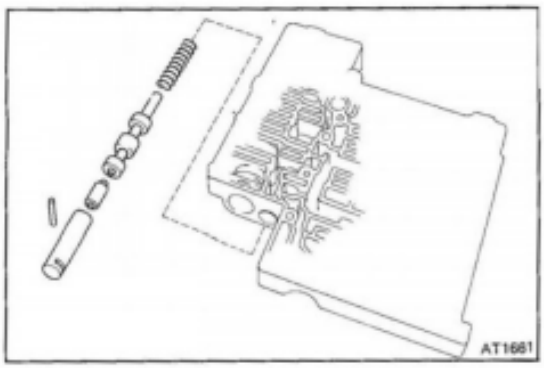

(b) Remove the sleeve, plug and 2-3 shift timing valve.

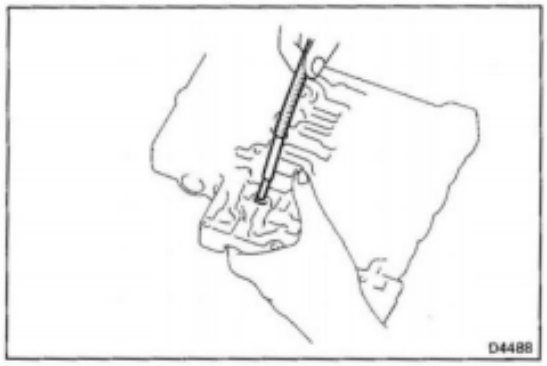

4. REMOVE 3-4 COAST SHIFT VALVE

(a) Remove the retainer with a magnetic finger by pushing in the plug.

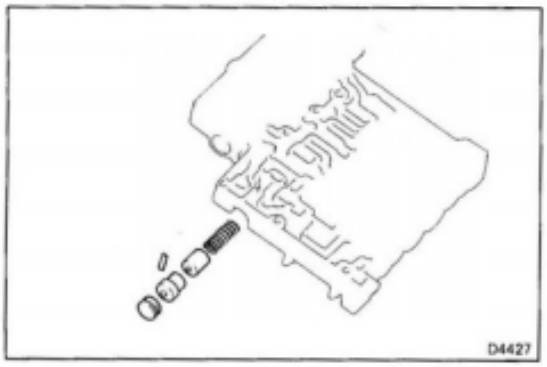

(b) Remove the plug, third coast valve and 3-4 coast shift valve.

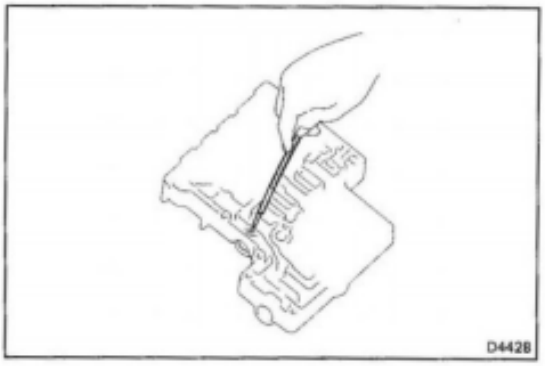

5. REMOVE 3-4 SHIFT VALVE

(a) Remove the pin with a magnetic finger.

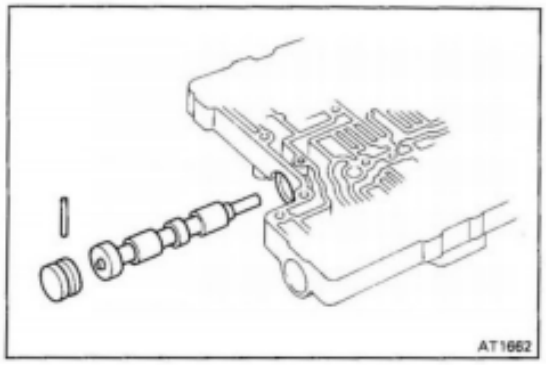

(b) Remove the plug and 3-4 shift valve.

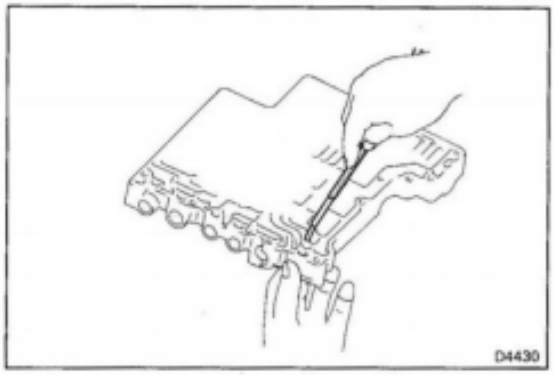

6. REMOVE DETENT REGULATOR VALVE

(a) Remove the retainer with a magnetic finger by pushing in the plug.

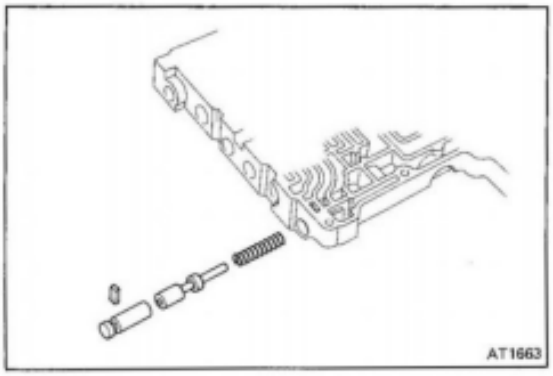

(b) Remove the plug, detent regulator plug and spring.

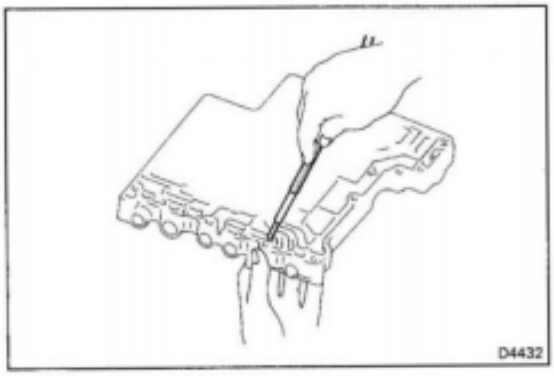

7. REMOVE LOCK-UP SIGNAL VALVE

(a) Remove the pin with a magnetic finger by pushing in the sleeve.

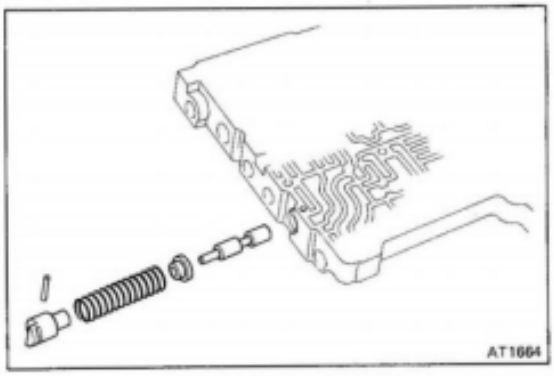

(b) Remove the sleeve, plug, spring, seat and lock-up signal valve.

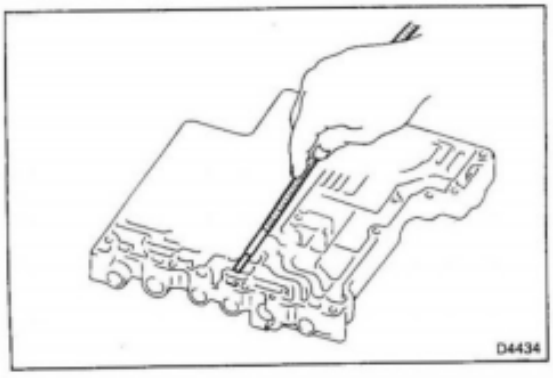

8. REMOVE CUT BACK VALVE

(a) Remove the retainer with a magnetic finger.

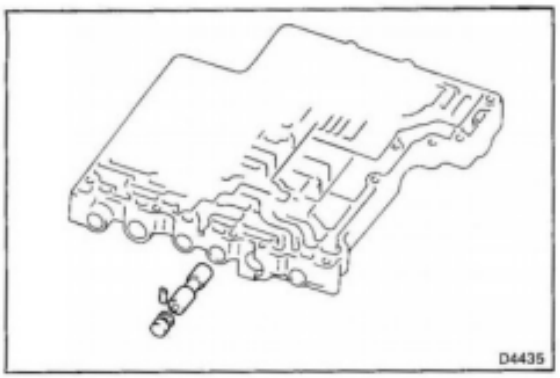

(b) Remove the plug and cut back valve.

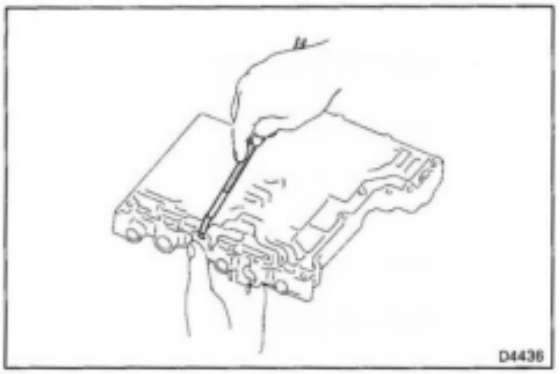

9. REMOVE OVERDRIVE CLUTCH EXHAUST VALVE

(a) Remove the retainer with a magnetic finger by pushing in the plug.

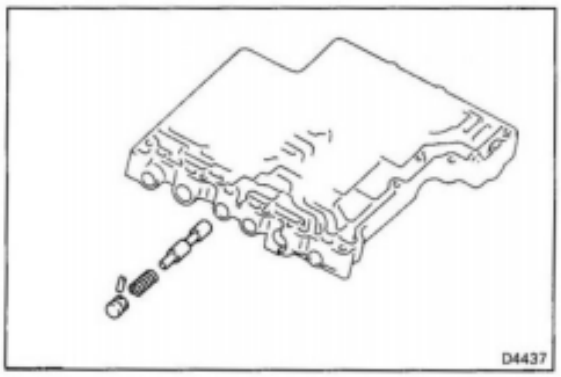

(b) Remove the plug, spring and overdrive clutch exhaust valve.

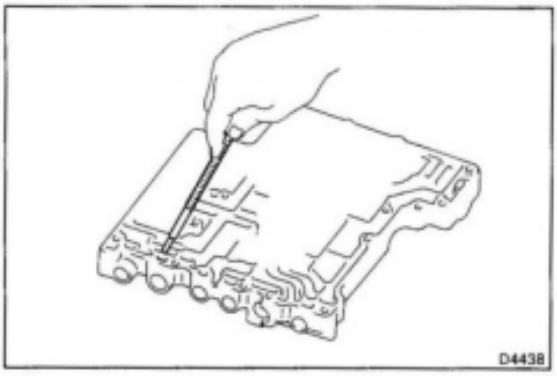

10. REMOVE MANUAL DOWN TIMING VALVE

(a) Remove the retainer with a magnetic finger.

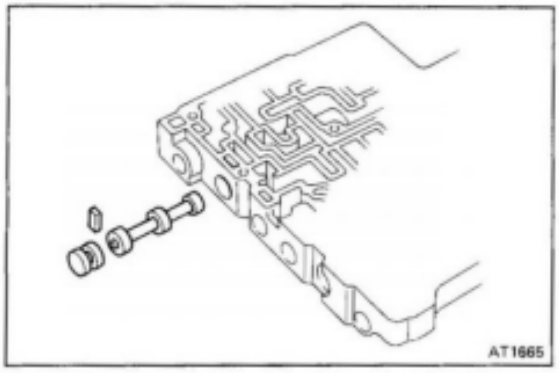

(b) Remove the plug and manual down timing valve.

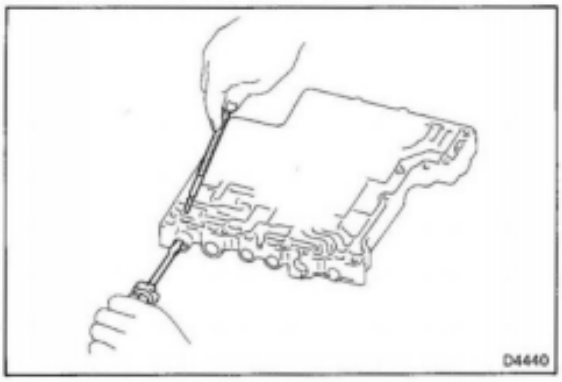

11. REMOVE INTERMEDIATE MODULATOR VALVE

(a) Remove the retainer with a magnetic finger by pushing in the plug.

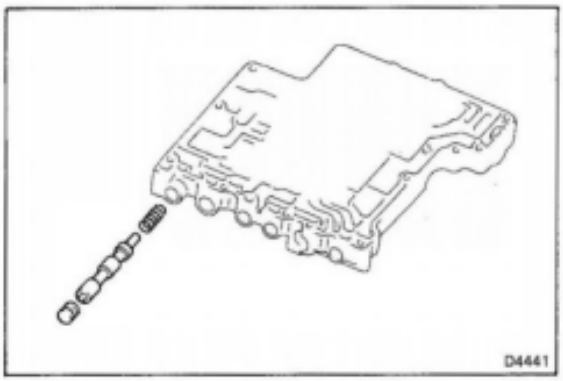

(b) Remove the plug, intermediate modulator valve and spring.

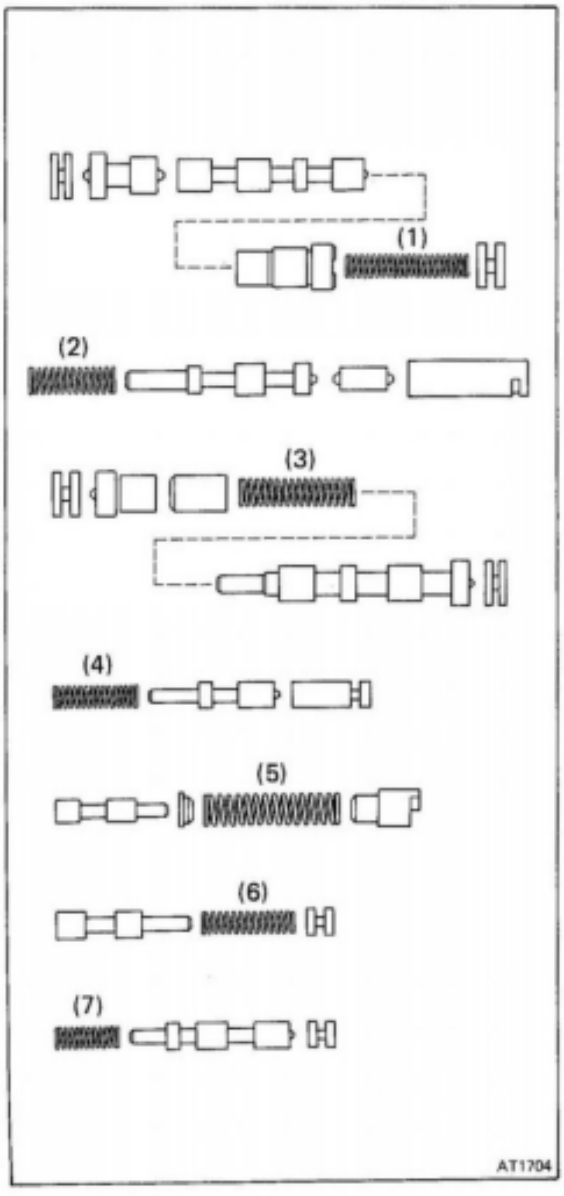

INSPECTION OF REAR UPPER VALVE BODY

INSPECT VALVE SPRINGS

Check for damage, squareness, rust and distorted coils. Measure the spring free height and replace if less than that shown below.

Spring			Free length mm (in.)
(1) 2-3 shift valve			44.65 (1.7579)
(2) 2-3 shift timing valve			29.40 (1.1575)
(3) 3-4 shift valve		HJ	39.40 (1.5512)
		FJ	38.32 (1.5087)
(4) Detent regulator valve		HJ	29.30 (1.1535)
		FJ	30.40 (1.1968)
(5) Lock-up signal valve	*18/6	FJ	52.83 (2.0799)
		HJ	53.41 (2.1028)
	17/6 16/6	FJ HJ	50.15 (1.9744)
(6) OD clutch exhaust valve			33.30 (1.3110)
(7) Intermediate modulator valve			22.50 (0.8858)

*: Speedometer drive and driven gear ratio. Gear ratio is stamped on the driven gear.

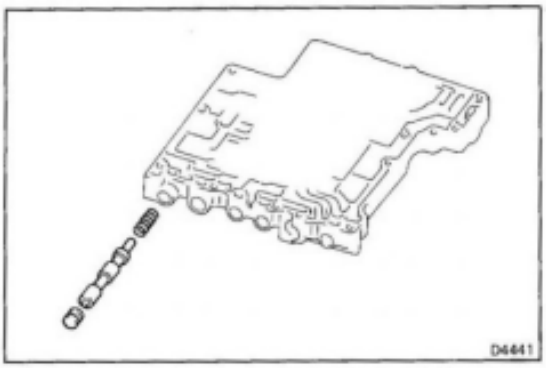

ASSEMBLY OF REAR UPPER VALVE BODY

(See page AT-102)

1. INSTALL INTERMEDIATE MODULATOR VALVE

(a) Install spring, intermediate modulator valve and plug.

(b) Install the retainer by pushing in the plug.

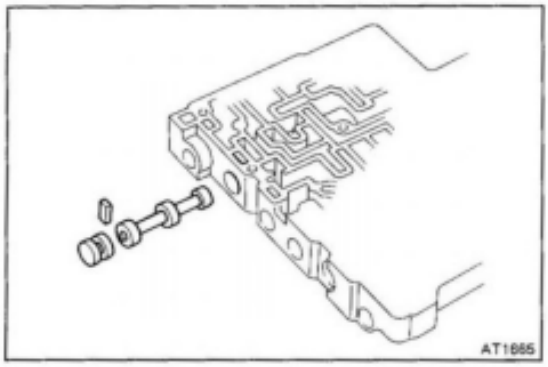

2. INSTALL MANUAL DOWN TIMING VALVE

(a) Install the manual down timing valve and plug.

(b) Install the retainer.

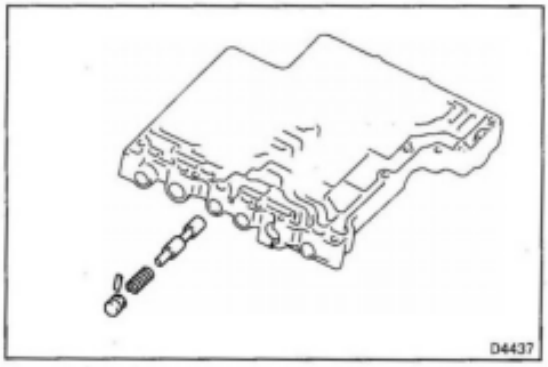

3. INSTALL OVERDRIVE CLUTCH EXHAUST VALVE

(a) Install the overdrive clutch exhaust valve, spring and plug.

(b) Install the retainer by pushing in the plug.

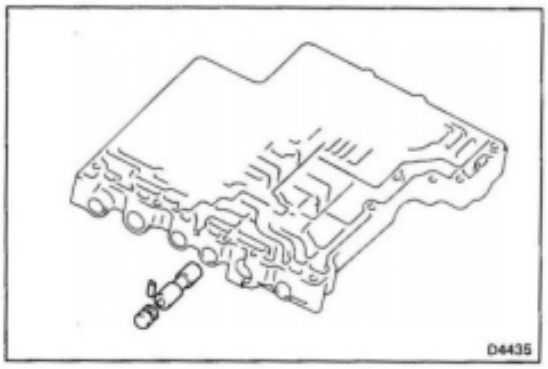

4. INSTALL CUT BACK VALVE

(a) Install the cut back valve and plug.

(b) Install the retainer.

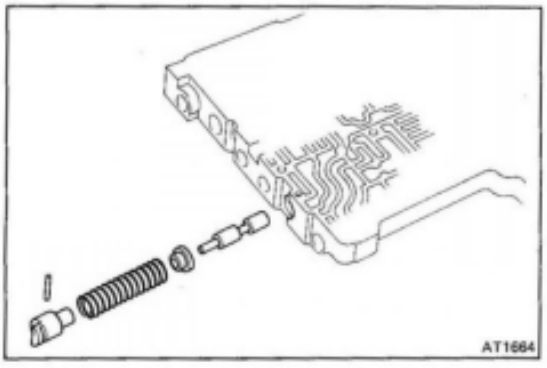

5. INSTALL LOCK-UP SIGNAL VALVE

(a) Install the lock-up signal valve, seat spring, plug and sleeve.

(b) Install the pin by pushing in the sleeve.

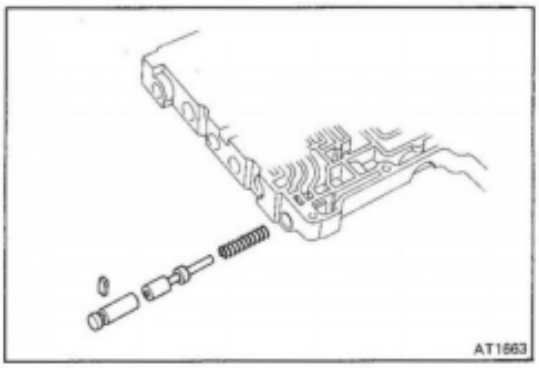

6. **INSTALL DETENT REGULATOR VALVE**
   (a) Install the spring, detent regulator valve and plug.
   (b) Install the retainer by pushing in the plug.

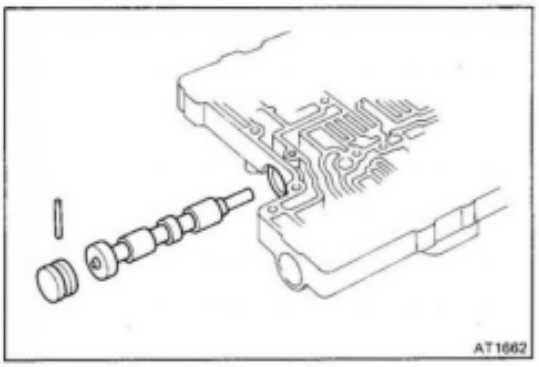

7. **INSTALL 3-4 SHIFT VALVE**
   (a) Install the 3-4 shift valve and pin.
   (b) Install the pin.

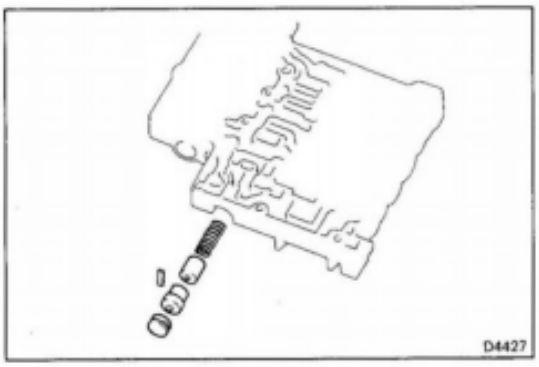

8. **INSTALL 3-4 COAST SHIFT VALVE**
   (a) Install the spring, 3-4 coast shift valve, third coast valve and plug.
   (b) Install the retainer by pushing in the plug.

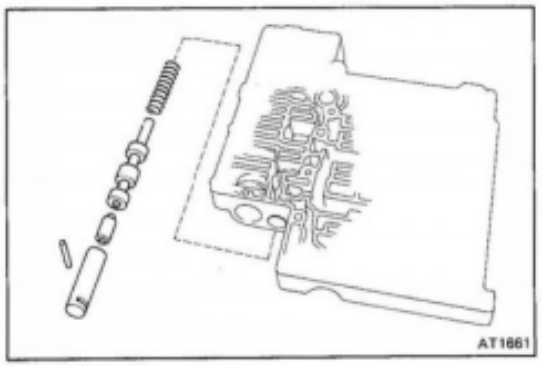

9. **INSTALL 2-3 SHIFT TIMING VALVE**
   (a) Install the spring, 2-3 shift timing valve, 2-3 shift timing plug and sleeve.
   (b) Install the pin by pushing in the sleeve.

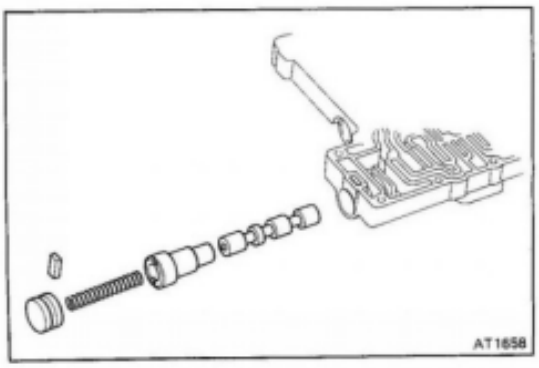

10. **INSTALL 2-3 SHIFT VALVE PLUG**
    (a) Install the 2-3 shift valve plug and plug.
    (b) Install the pin.

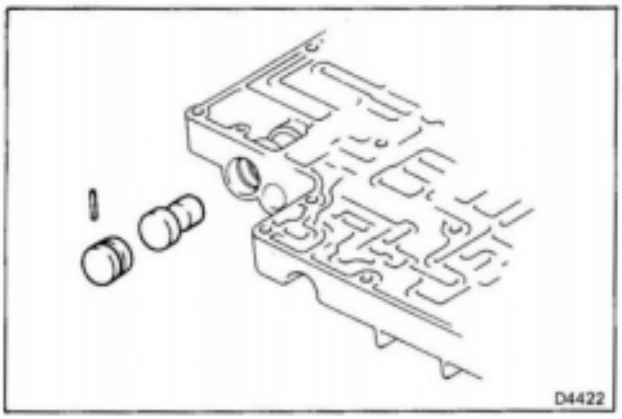

11. INSTALL 2-3 SHIFT VALVE

(a) Install the 2-3 shift valve, intermediate coast shift valve and plug.

(b) Install the retainer by pushing in the plug.

Lower Valve Body

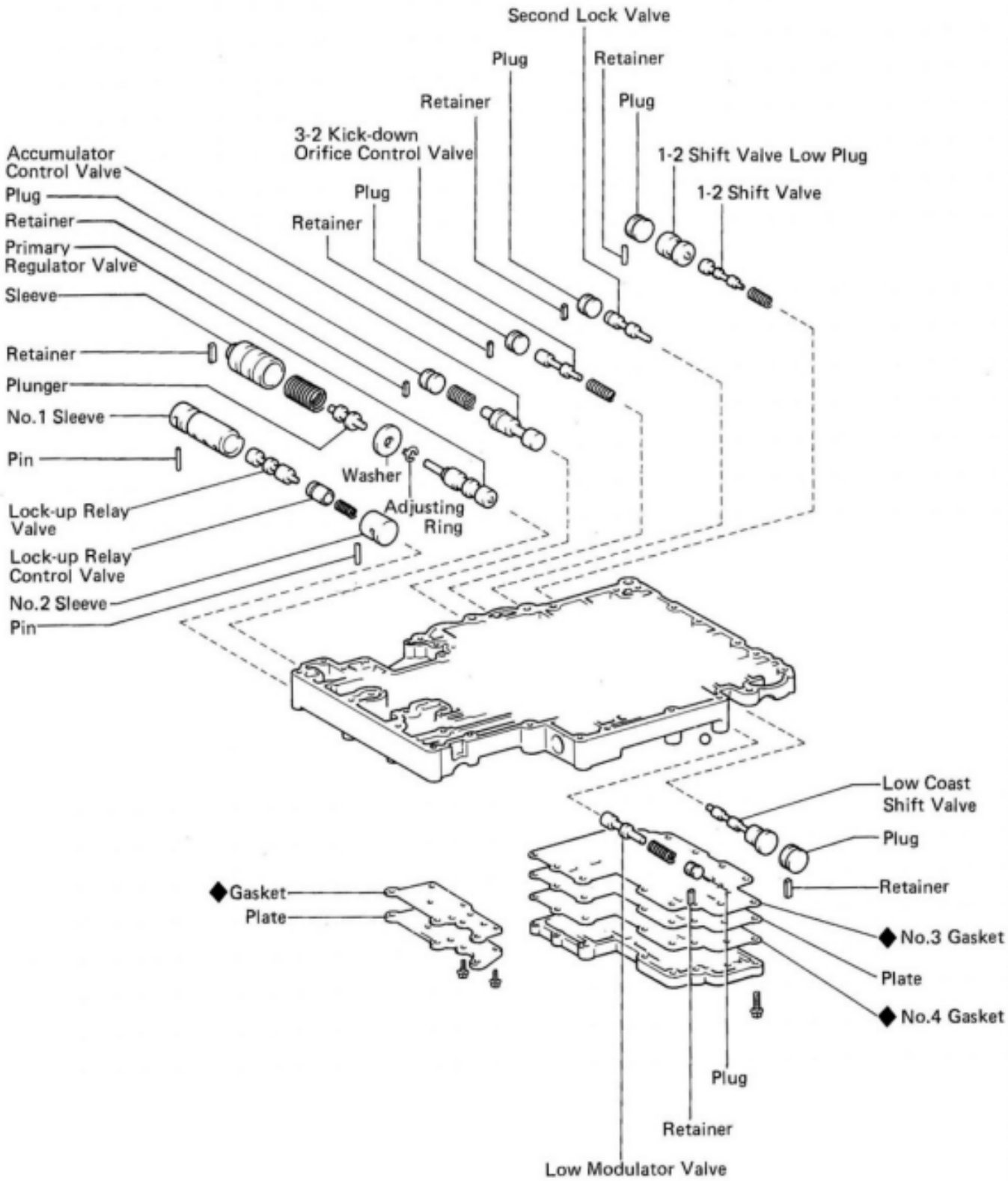

◆ Non-reusable part

AT1693

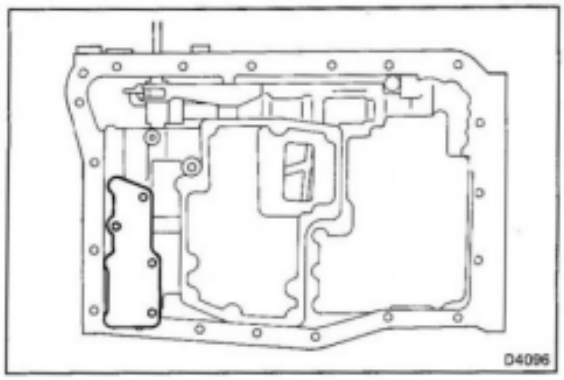

DISASSEMBLY OF LOWER VALVE BODY

1. REMOVE LOCK-UP RELAY VALVE

(a) Remove the four bolts temporarily installed to valve body.

(b) Remove the lock-up relay valve plate.

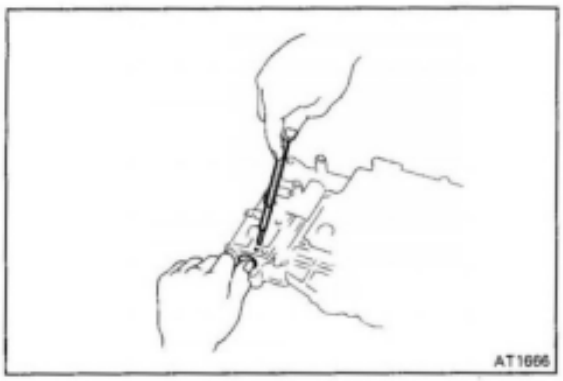

(c) Remove the pin with a magnetic finger by pushing in the sleeve.

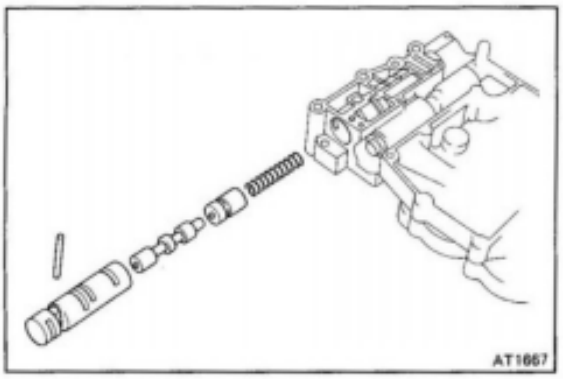

(d) Remove the No. 1 sleeve, lock-up relay valve, lock-up relay control valve and spring.

2. REMOVE NO. 2 SLEEVE (FOR LOCK-UP RELAY CONTROL VALVE)

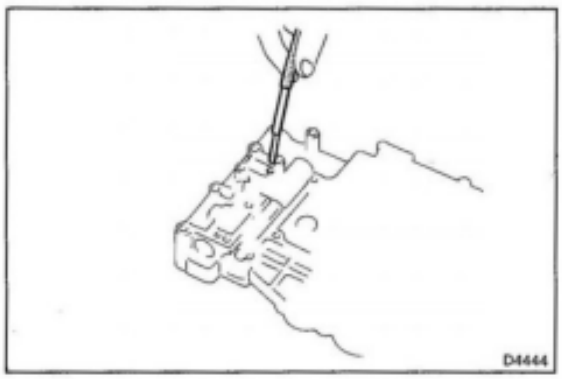

(a) Remove the pin with a magnetic finger.

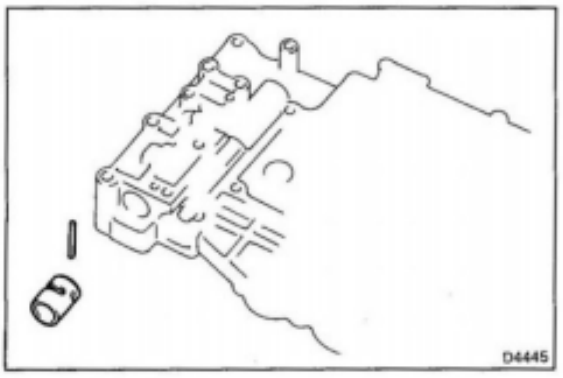

(b) Remove the No. 2 sleeve.

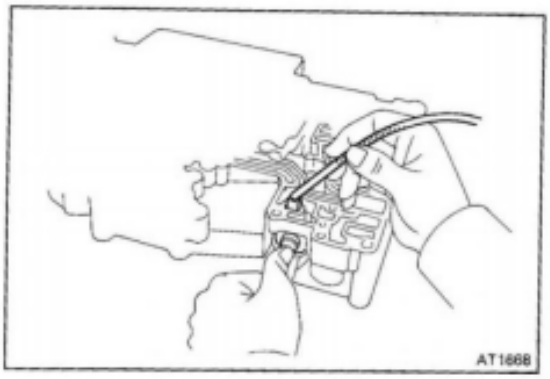

3. REMOVE PRIMARY REGULATOR VALVE

(a) Remove the retainer with a magnetic finger by pushing in the sleeve.

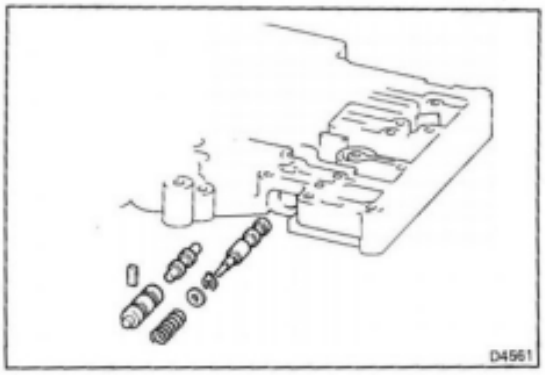

(b) Remove the sleeve, spring, plunger, washer, adjusting ring and primary regulator valve.

NOTE: Note the number of adjusting rings installed.

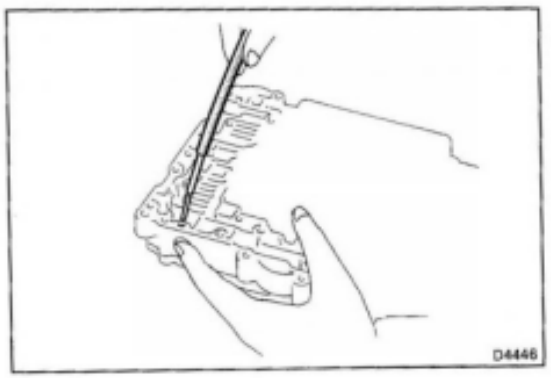

4. REMOVE 1-2 SHIFT VALVE

(a) Remove the pin with a magnetic finger by pushing in the plug.

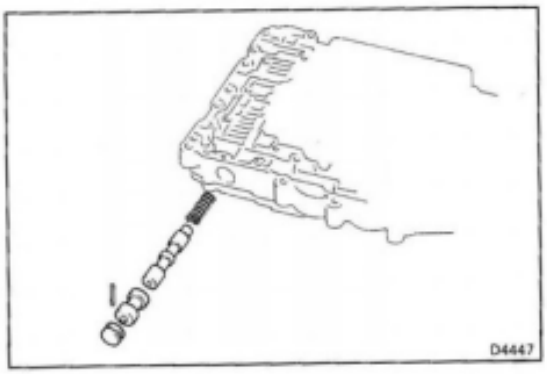

(b) Remove the plug, 1-2 shift valve low plug, 1-2 shift valve and spring.

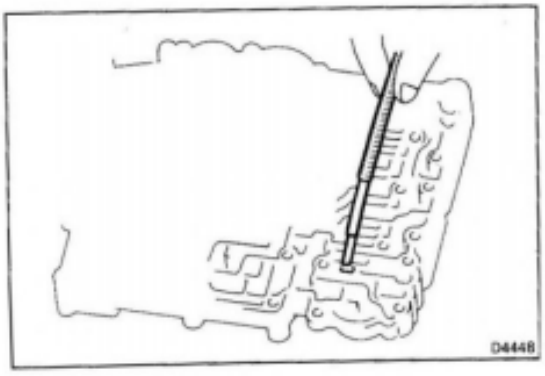

5. REMOVE LOW COAST SHIFT VALVE

(a) Remove the retainer with a magnetic finger.

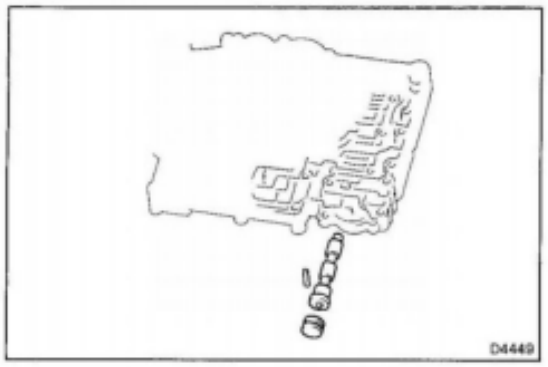

(b) Remove the plug and low coast shift valve.

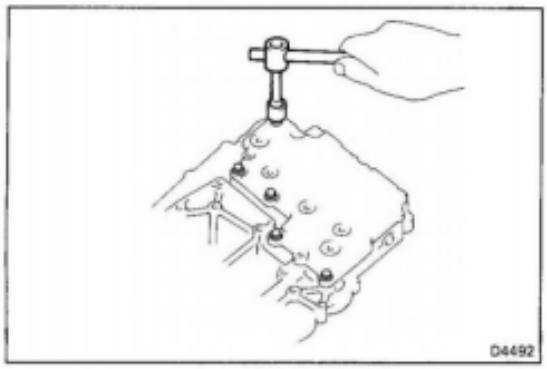

6. REMOVE LOWER VALVE BODY COVER

(a) Remove the five bolts holding the cover to the valve body.

(b) Remove the cover, plate and two gaskets.

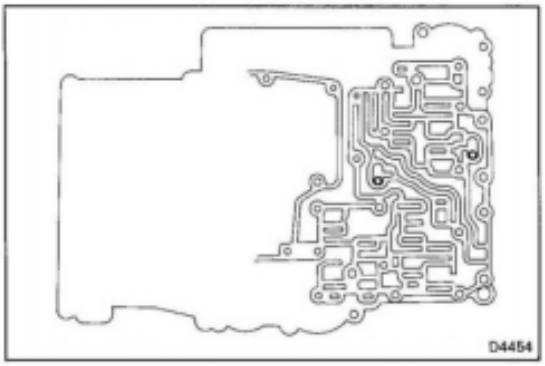

7. REMOVE TWO CHECK BALLS

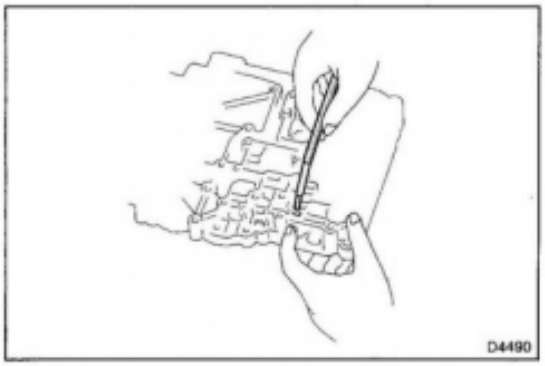

8. REMOVE SECOND LOCK VALVE

(a) Remove the retainer with a magnetic finger by pushing in the plug.

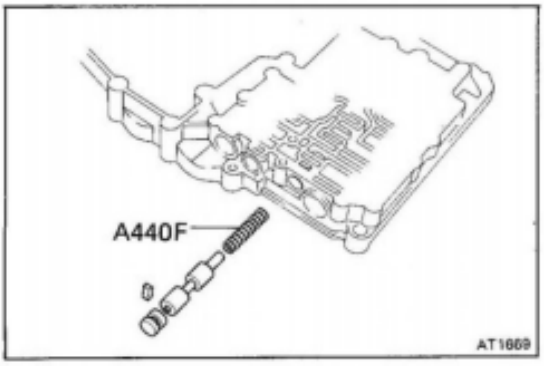

(b) Remove the plug, second lock valve and spring.

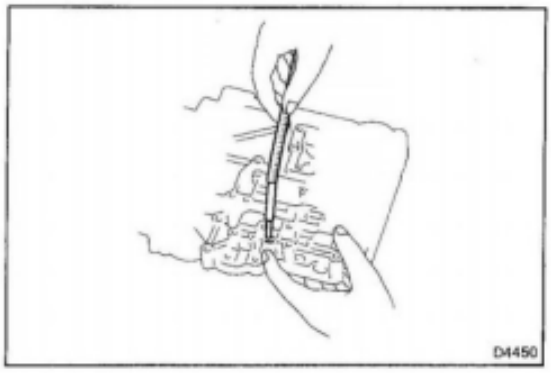

9. REMOVE 3-2 KICK-DOWN ORIFICE CONTROL VALVE

(a) Remove the retainer with a magnetic finger by pushing in the plug.

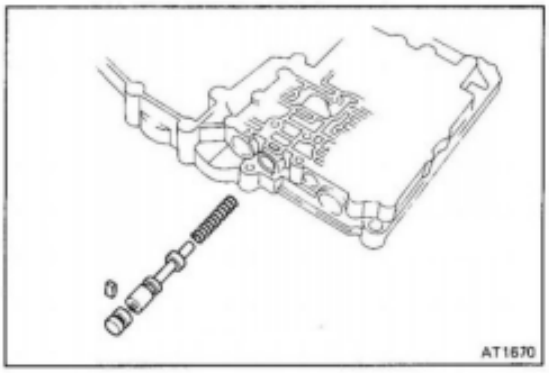

(b) Remove the plug, 3-2 kick-down orifice control valve and spring.

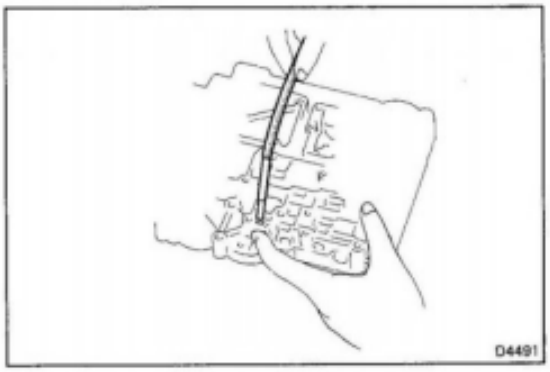

10. REMOVE ACCUMULATOR CONTROL VALVE

(a) Remove the retainer with a magnetic finger by pushing in the plug.

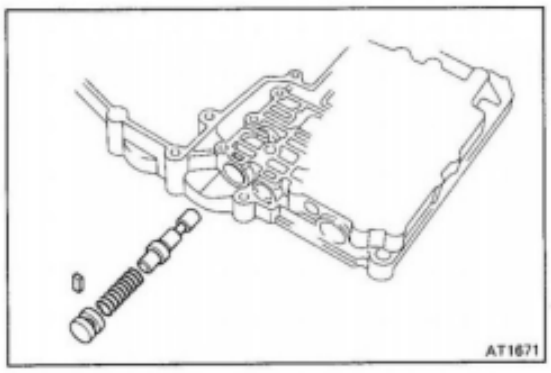

(b) Remove the plug, spring and accumulator control valve.

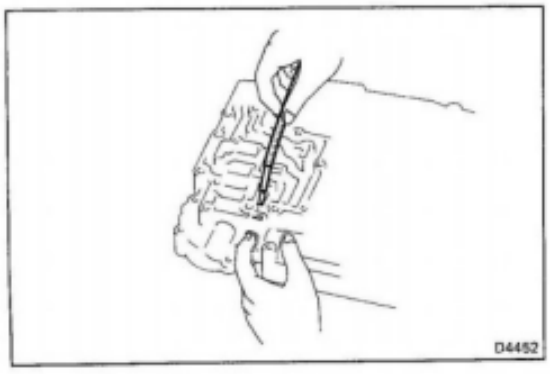

11. REMOVE LOW MODULATOR VALVE

(a) Remove the retainer with a magnetic finger by pushing in the plug.

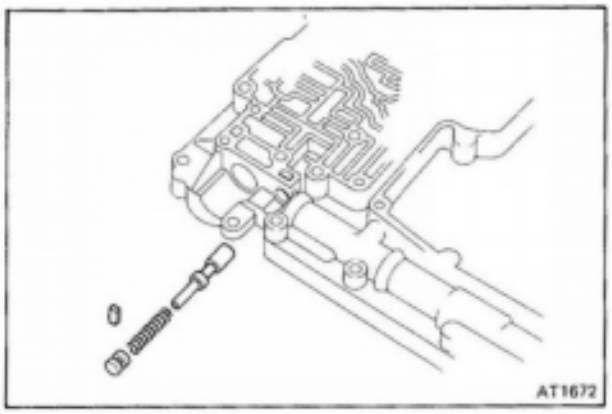

(b) Remove the plug, spring and low modulator valve.

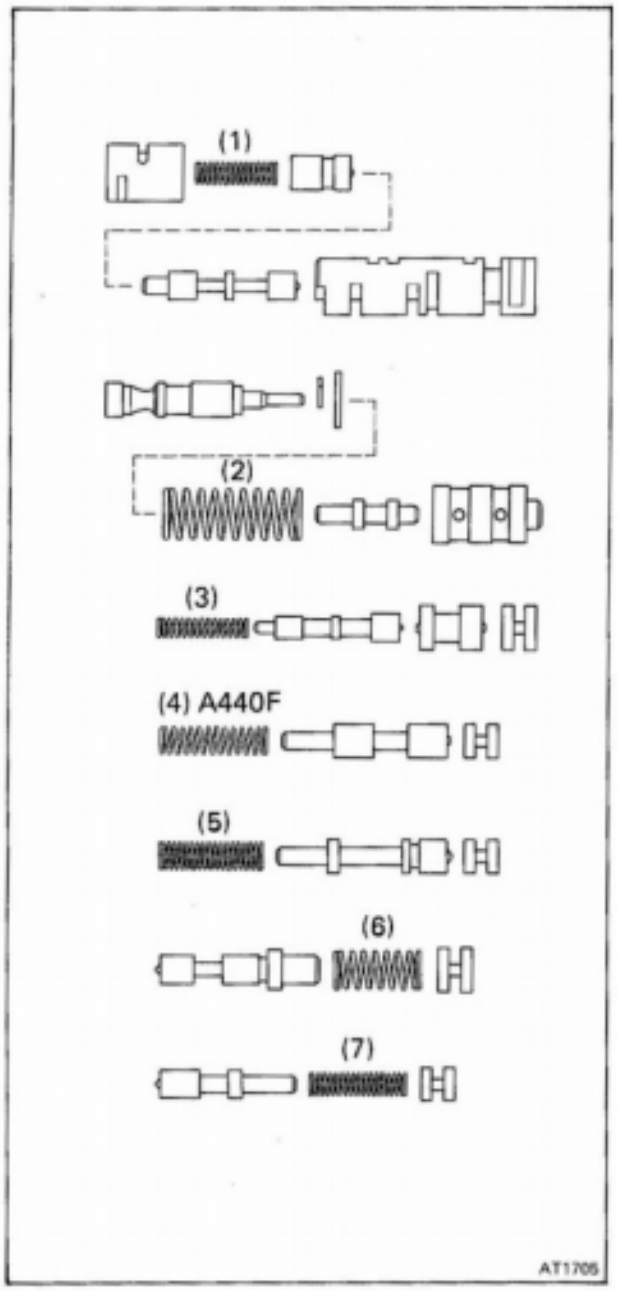

INSPECTION OF LOWER VALVE BODY

INSPECT VALVE SPRINGS

Check for damage, squareness, rust and distorted coils. Measure the spring free height and replace if less than that shown below.

Spring	Free length mm (in.)
(1) Lock-up relay valve	32.40 (1.2756)
(2) Primary regulator valve	58.20 (2.2913)
(3) 1-2 shift valve	26.58 (1.0465)
(4) Second lock valve (A440F)	29.40 (1.1575)
(5) 3-2 kick-down orifice control valve	32.45 (1.2776)
(6) Accumulator control valve	25.11 (0.9886)
(7) Low modulator valve	31.80 (1.2520)

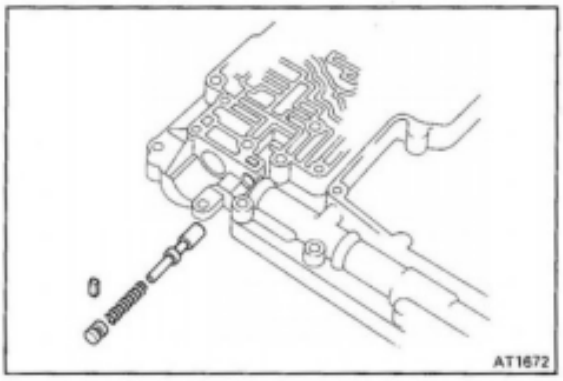

ASSEMBLY OF LOWER VALVE BODY

(See page AT-111)

1. INSTALL LOW MODULATOR VALVE

(a) Install the low modulator valve, spring and plug.

(b) Install the retainer by pushing in the plug.

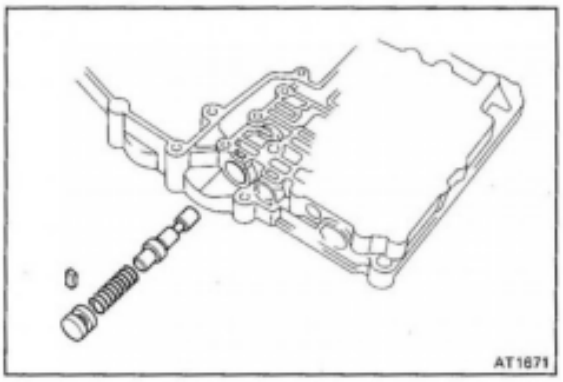

2. INSTALL ACCUMULATOR CONTROL VALVE

(a) Install the accumulator control valve, spring and plug.

(b) Install the retainer by pushing in the plug.

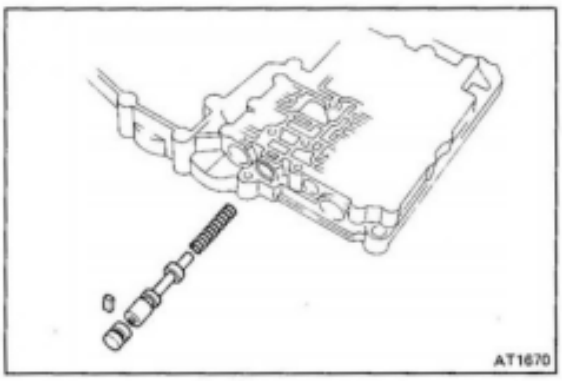

3. INSTALL 3-2 KICK-DOWN OF ORIFICE CONTROL VALVE

(a) Install the 3-2 kick-down orifice control valve, spring and plug.

(b) Install the retainer by pushing in the plug.

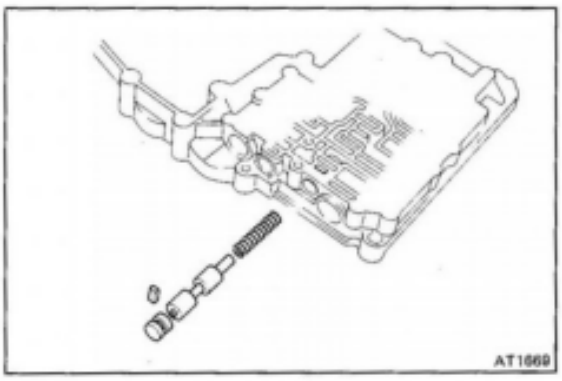

4. INSTALL SECOND LOCK VALVE

(a) Install the spring, second lock valve and retainer.

(b) Install the retainer by pushing in the plug.

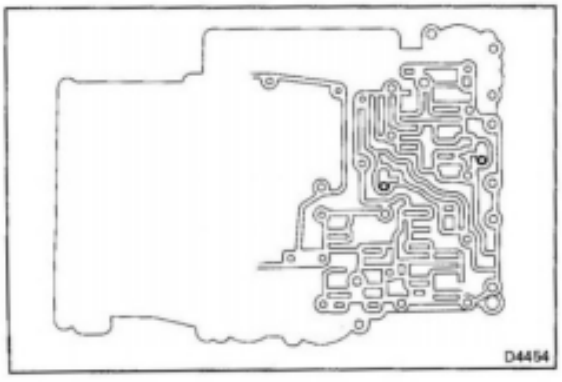

5. INSTALL TWO CHECK BALLS

Install two check balls as shown in the figure.

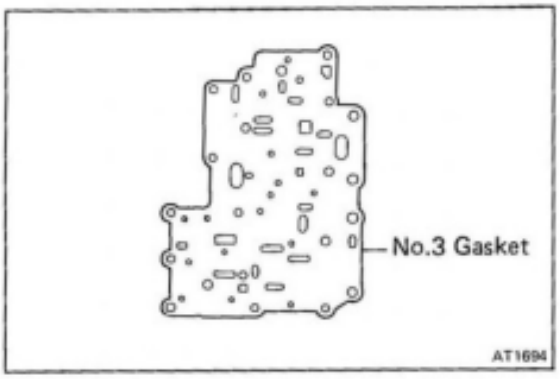

6. INSTALL LOWER VALVE BODY COVER

(a) Position a new No. 3 gasket on the lower valve body.

NOTE: Align a new No. 3 gasket at each bolt hole.

(b) Position the plate on the No. 3 gasket.

NOTE: Align the plate at each bolt hole.

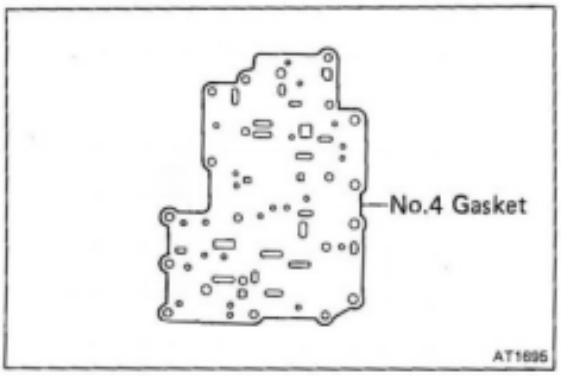

(c) Position a new No. 4 gasket on the plate.

NOTE: Align a new No. 4 gasket at each bolt hole.

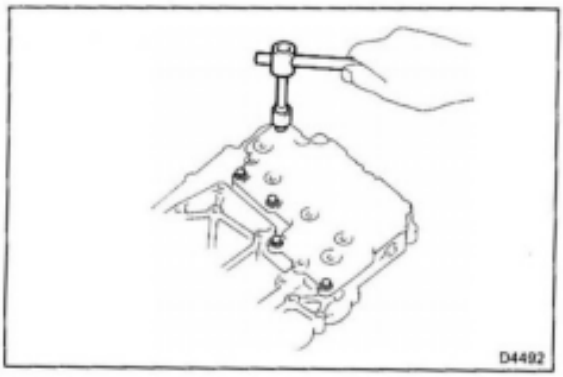

(d) Install the lower valve body cover.
Torque the five bolts.

Torque: 55 kg-cm (48 in.-lb, 5.4 N·m)

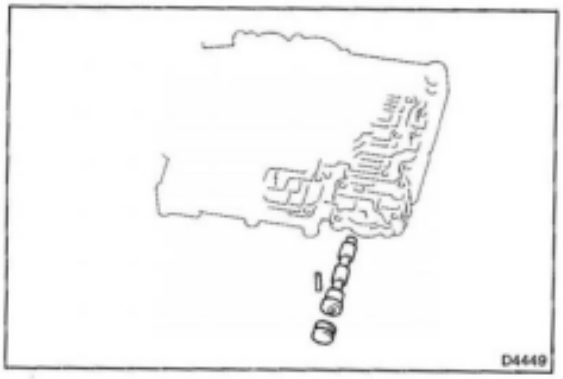

7. INSTALL LOW COAST SHIFT VALVE

(a) Install the low coast shift valve and plug.

(b) Install the retainer.

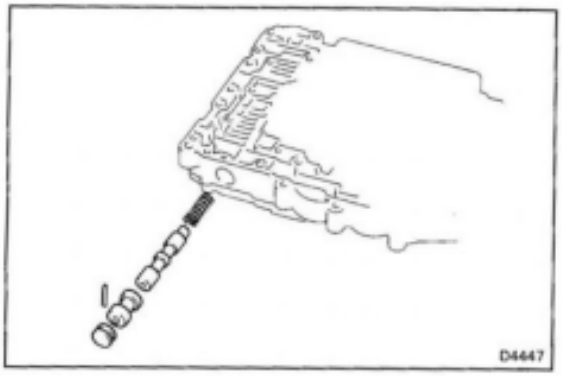

8. INSTALL 1-2 SHIFT VALVE

(a) Install the spring, 1-2 shift valve, 1-2 shift valve low plug and plug.

(b) Install the pin by pushing in the plug.

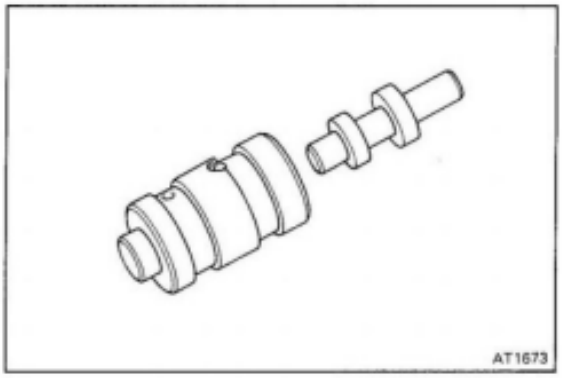

9. INSTALL PRIMARY REGULATOR VALVE

(a) Insert the plunger into the sleeve.

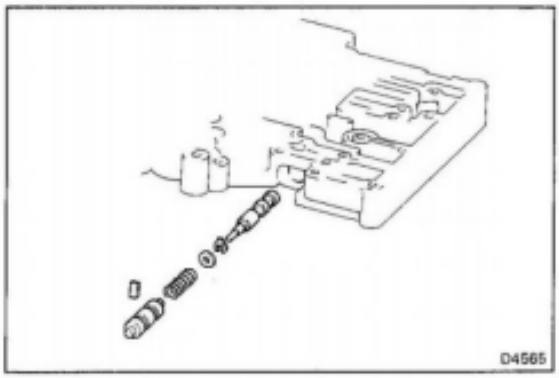

(b) Install the primary regulator valve, adjusting ring, washer, spring and sleeve into the bore.

NOTE:

- Install the same number of adjusting rings as were installed during disassembly.
- Install the flukes of adjusting ring facing down.

(c) Install the retainer by pushing in the sleeve.

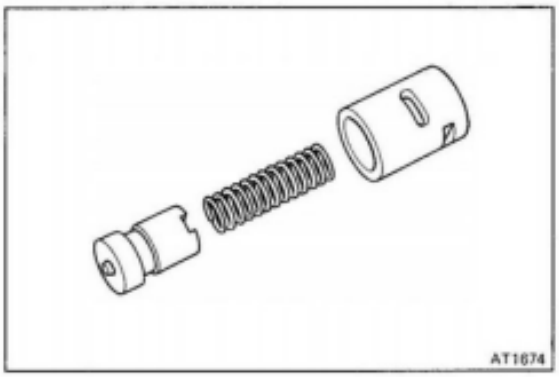

10. INSTALL NO. 2 SLEEVE (FOR LOCK-UP RELAY CONTROL VALVE)

(a) Insert the spring and lock-up relay control valve into the No. 2 sleeve.

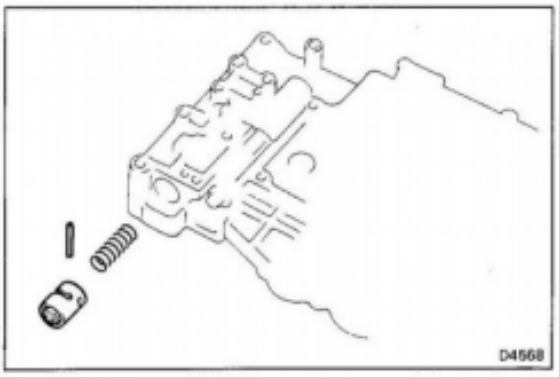

(b) Install the assembled spring, lock-up relay control valve and No. 2 sleeve into the bore.

(c) Install the pin.

NOTE: Until the lock-up relay valve is installed, hold the lock-up relay control valve with a small screwdriver to prevent it from flying out.

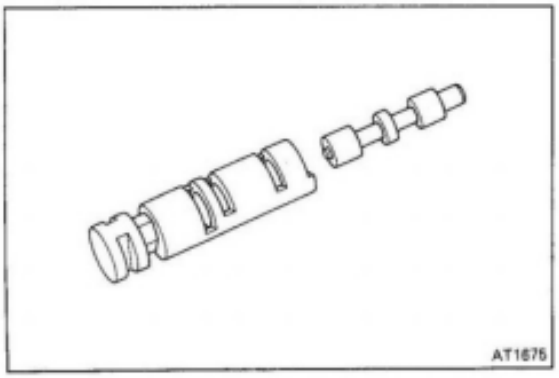

11. INSTALL LOCK-UP RELAY VALVE

(a) Insert the lock-up relay valve into the No. 1 sleeve.

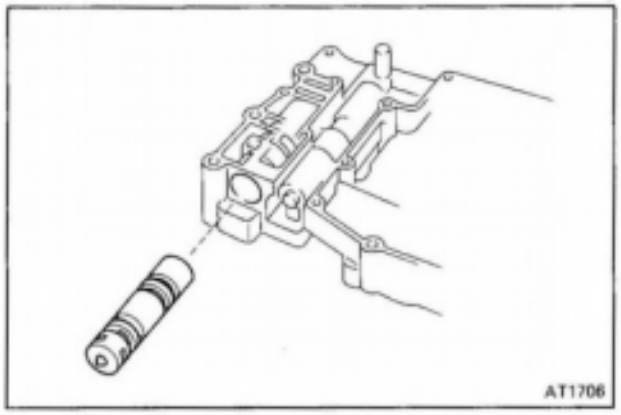

(b) Install the lock-up relay valve and No. 1 sleeve into the bore.

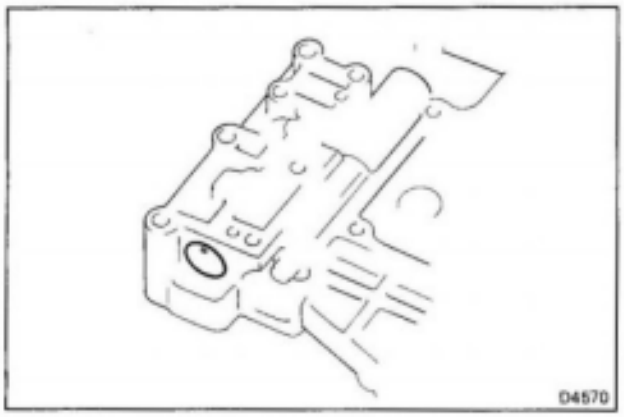

(c) Race the alignment mark of No. 1 sleeve up as shown in the figure and install the pin by pushing in the sleeve.

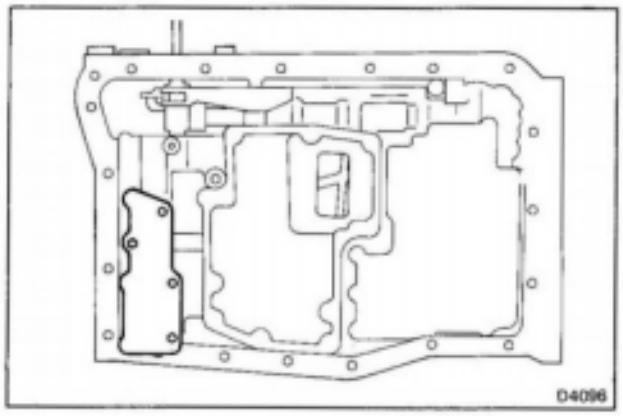

(d) Place the lock-up relay valve plate.

(e) Temporarily install the four bolts.

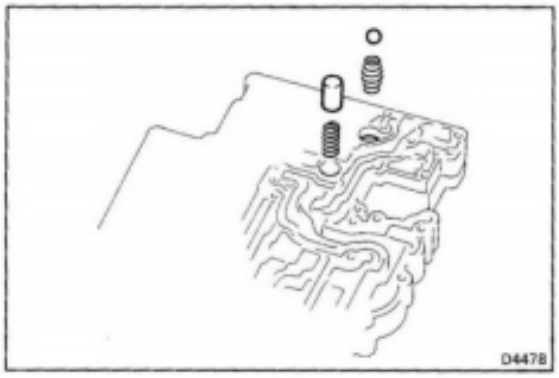

ASSEMBLY OF VALVE BODY

(See page AT-92)

1. **INSTALL CHECK BALL, VALVE AND TWO SPRINGS TO LOWER VALVE BODY**

   Install the check ball, valve two springs to the lower valve body as shown in the figure.

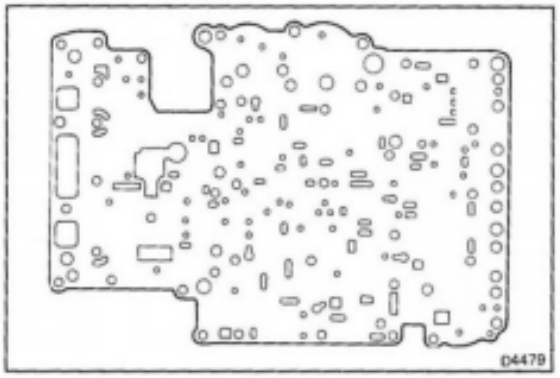

2. **POSITION NEW NO. 2 GASKET ON LOWER VALVE BODY**

   Align a new No. 2 gasket at each bolt hole.

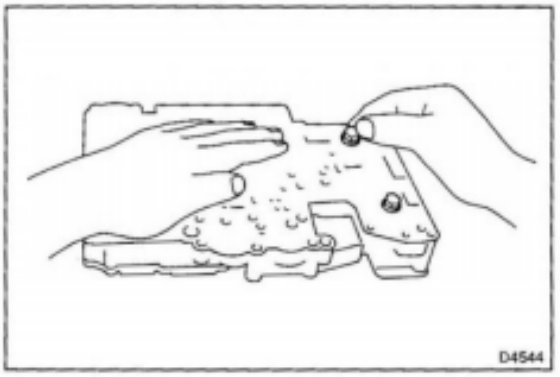

3. **TEMPORARILY INSTALL PLATE TO LOWER VALVE BODY**

   Position the plate on the No. 2 gasket. Temporarily install the two short bolts to compress the plate against the spring loaded check valve by hand.

   NOTE: Use the bolt for the oil tube clamp.

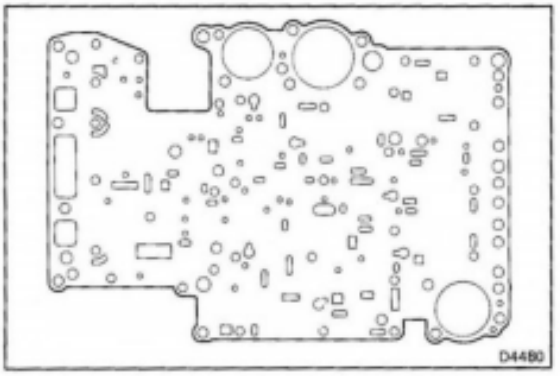

4. **POSITION NO. 1 GASKET ON PLATE**

   Align a new No. 1 gasket at each bolt hole.

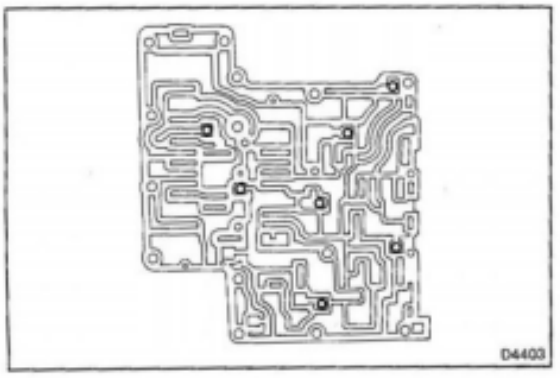

5. **INSTALL SEVEN CHECK BALLS TO REAR UPPER VALVE BODY**

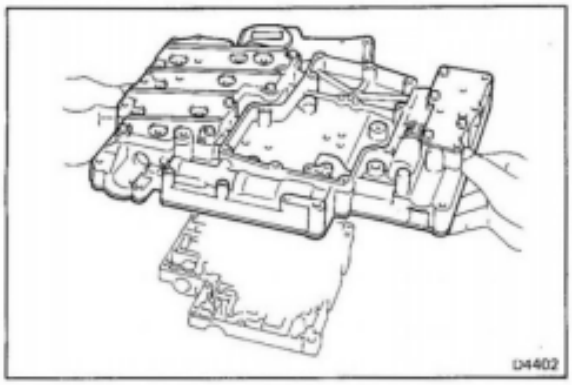

6. **PLACE LOWER VALVE BODY WITH PLATE AND GASKETS ON TOP REAR UPPER VALVE BODY**

Align each bolt hole and gasket in the valve body.

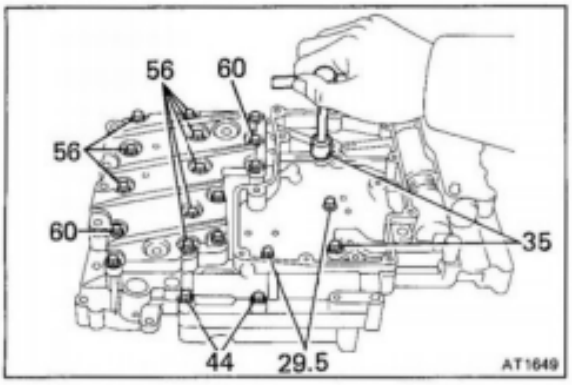

7. **TEMPORARILY INSTALL SIXTEEN BOLTS TO LOWER VALVE BODY**

NOTE: Each bolt length (mm) is indicated in the figure.

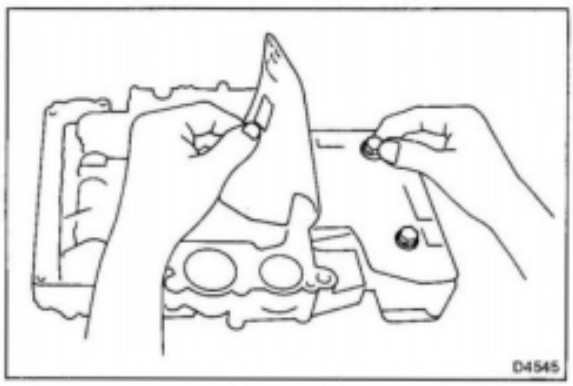

8. **TURN OVER ASSEMBLY AND REMOVE TEMPORARY BOLTS OF LOWER VALVE BODY**

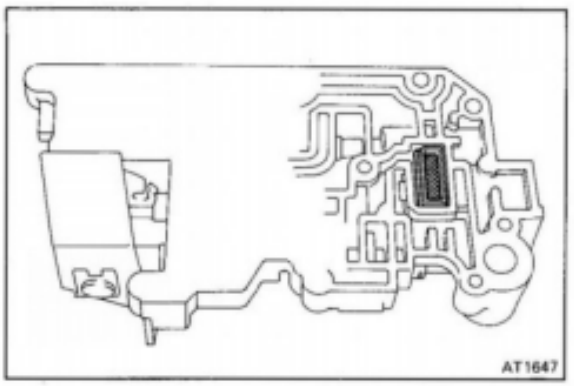

9. **INSTALL OIL STRAINER TO FRONT UPPER VALVE BODY**

Install the oil strainer with the raised strainer rim facing up.

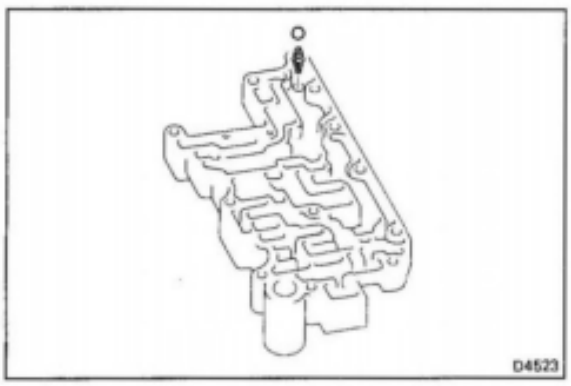

10. **INSTALL CHECK BALL AND SPRING TO FRONT UPPER VALVE BODY**

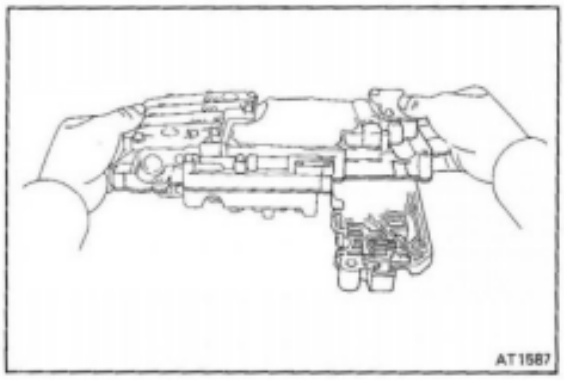

11. **PLACE LOWER VALVE BODY AND REAR LOWER VALVE BODY ON TOP FRONT LOWER VALVE BODY**

Align each bolt hole and gasket in the valve body.

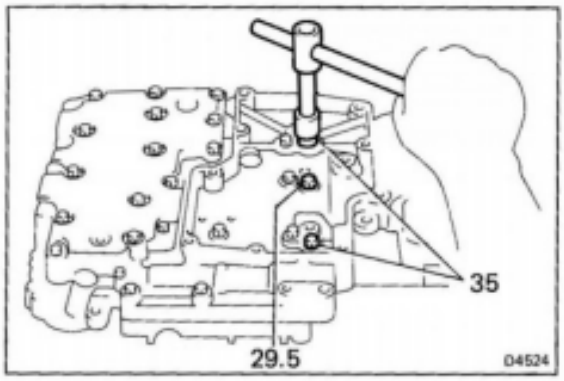

12. **TEMPORARILY INSTALL THREE BOLTS TO LOWER VALVE BODY**

NOTE: Each bolt length (mm) is indicated in the figure.

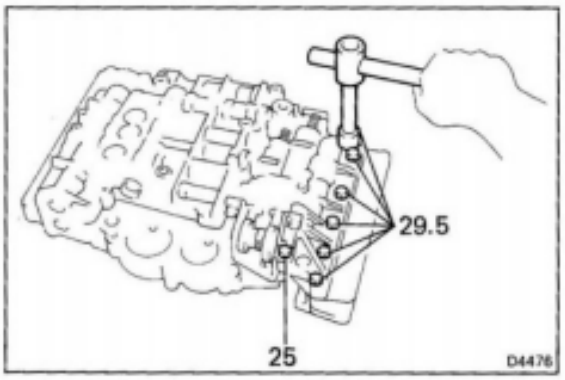

13. **TURN OVER ASSEMBLY AND TEMPORARILY INSTALL SEVEN BOLTS TO FRONT UPPER VALVE BODY**

NOTE: Each bolt length (mm) is indicated in the figure.

14. **TIGHTEN BOLTS IN UPPER AND LOWER VALVE BODY**

Recheck alignment of the gaskets.
Tighten the bolts.

Torque: 55 kg-cm (48 in.-lb, 5.4 N·m)

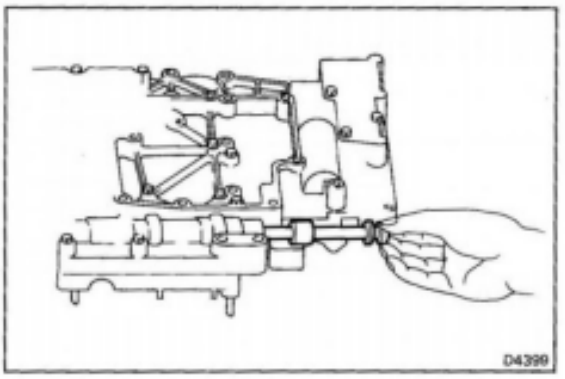

15. **INSTALL MANUAL VALVE**

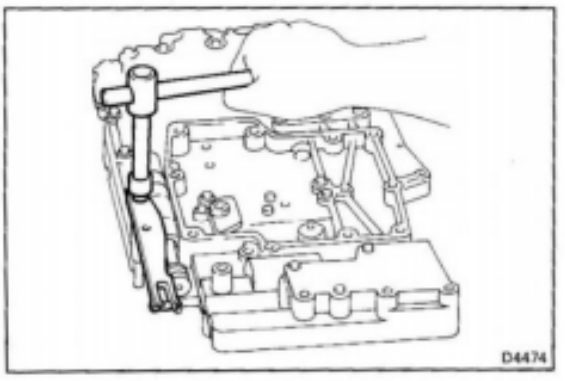

16. **INSTALL DETENT SPRING**

Torque: 55 kg-cm (48 in.-lb, 5.4 N·m)

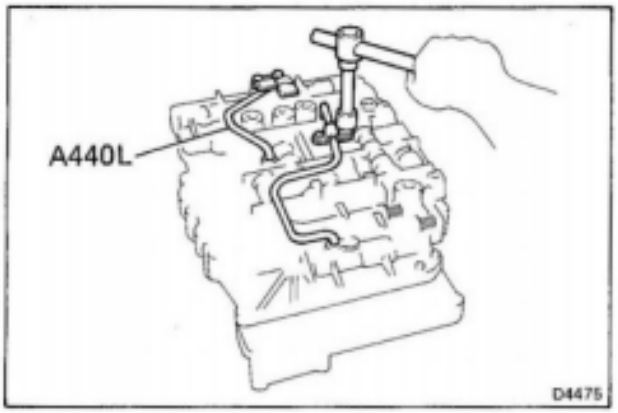

17. TURN OVER ASSEMBLY AND INSTALL OIL TUBE

(a) Using a plastic hammer, install the tube.

A440L : Two tubes
A440F : One tubes

CAUTION: Be careful not to bend or damage the tubes.

(b) Install the clamp to the tubes.

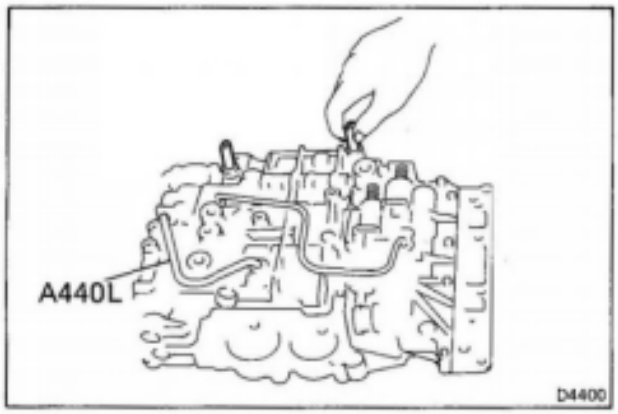

18. INSTALL TWO LINE PRESSURE TUBES

ASSEMBLY OF TRANSMISSION (A440F)

Disassembly, inspection and assembly of each component group has been indicated in the preceding chapter. Before assembly, make sure, all the component groups are assembled correctly.

If something wrong is found in a certain component group during assembly, inspect and repair this group immediately. Recommended ATF: DEXRON® II.

GENERAL ASSEMBLY NOTES:

1. The automatic transmission is composed of highly precision-finished parts, requiring careful inspection before assembly, because even a small nick could cause fluid leakage or affect performance.
2. Before assembling new clutch discs, soak them in automatic transmission fluid for at least thirty minuites.
3. Apply automatic transmission fluid on the sliding or rotating surfaces of parts before assembly.
4. Use petroleum jelly to keep small parts in their places.
5. Do not use adhesive cements on gaskets and similar parts.
6. When assembling the transmission, be sure to use new gaskets and O-rings.
7. Dry all parts with compressed air—never use shop rags.
8. Be sure to install the thrust bearings and races in the correct direction and position.

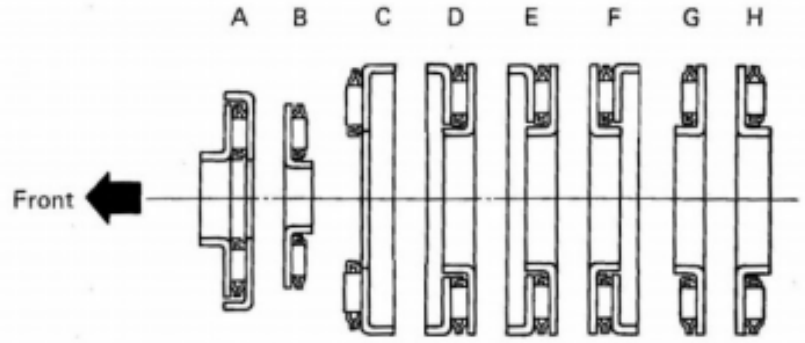

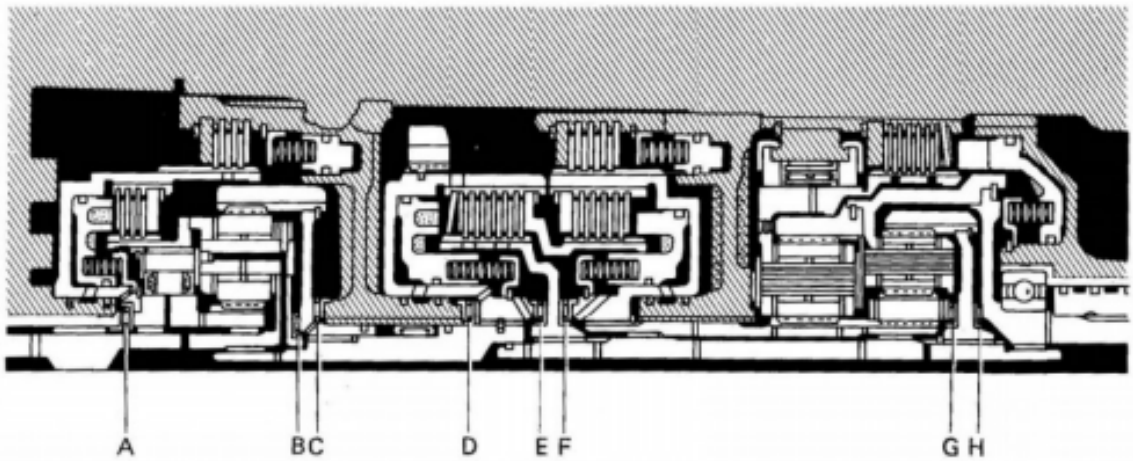

AT1697
AT1698

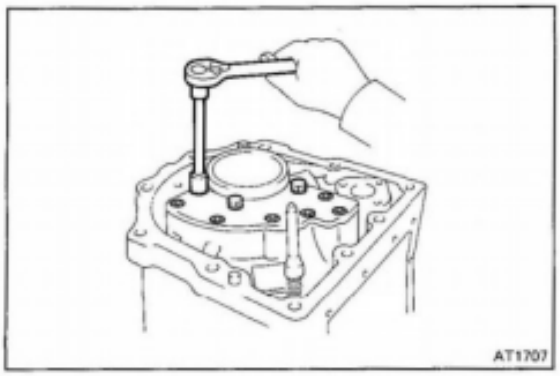

1. INSTALL TRANSMISSION REAR COVER

(a) Place the gasket on the transmission case.

(b) Install the transmission rear cover and torque the three bolts and six screws.

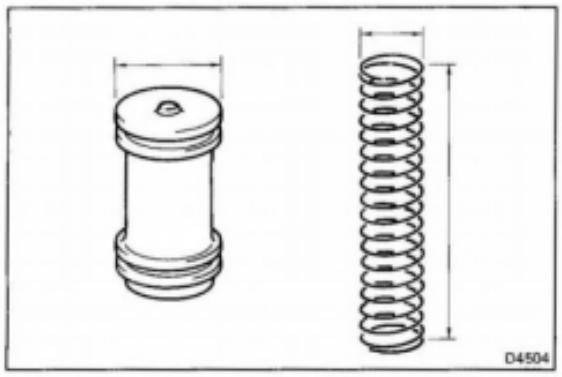

2. INSTALL C_1 ACCUMULATOR PISTON AND SPRING

(a) Coat the O-rings with ATF and install it to the piston.

mm (in.)

Piston diameter	Spring diameter	Spring free length
29.87 (1.1760)	17.92 (0.7055)	92.34 (3.6354)

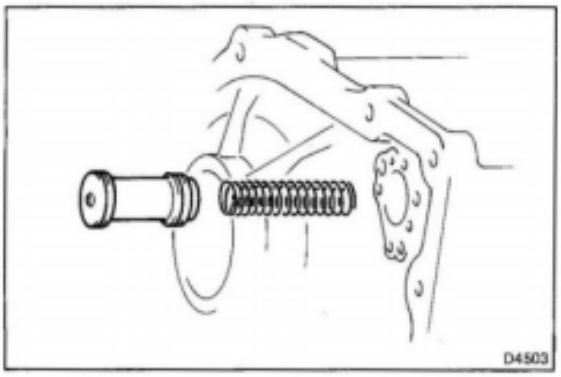

(b) Install the spring and piston for C_1.

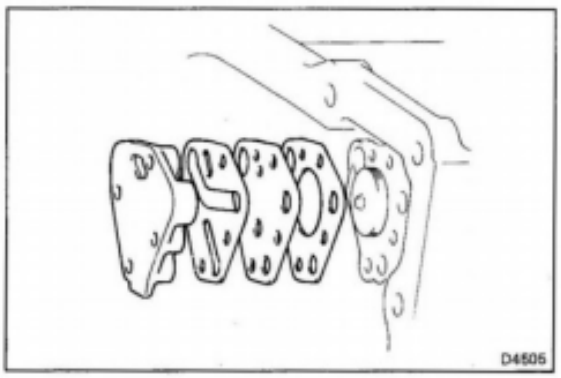

(c) Place new two gaskets on the transmission case and plate as shown.

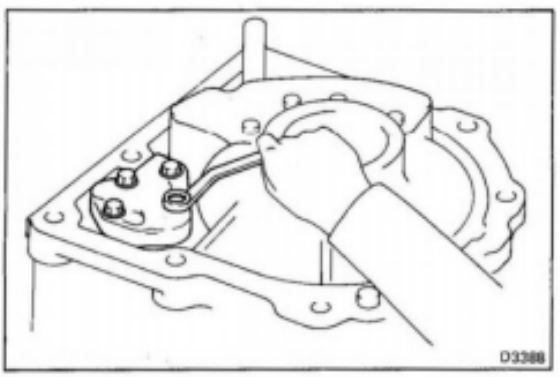

(d) Install the front clutch accumulator cover and torque the four bolts.

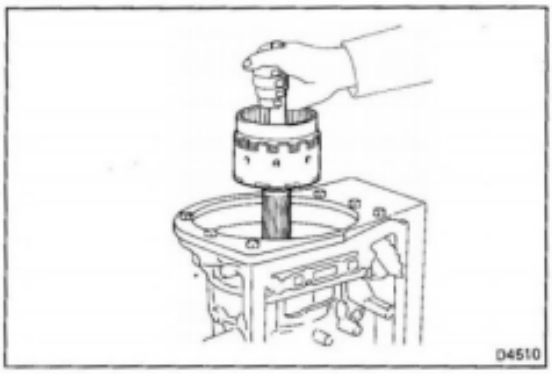

3. INSTALL PLANETARY GEAR AND OUTPUT SHAFT

(a) Install the planetary gear and output shaft to the transmission case.

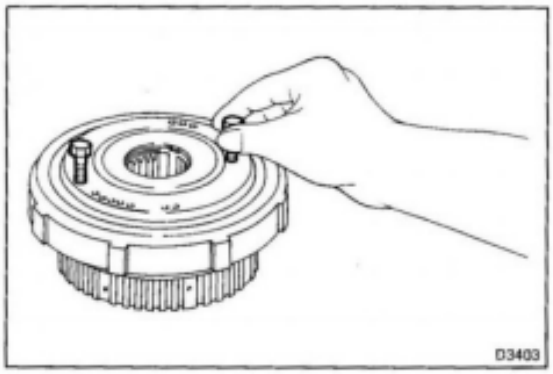

(b) Temporarily install the two bolts to the one-way clutch drum.

NOTE: Use two 6-mm (1 mm pitch) bolts. Do not tighten over 5 revolutions (5 mm).

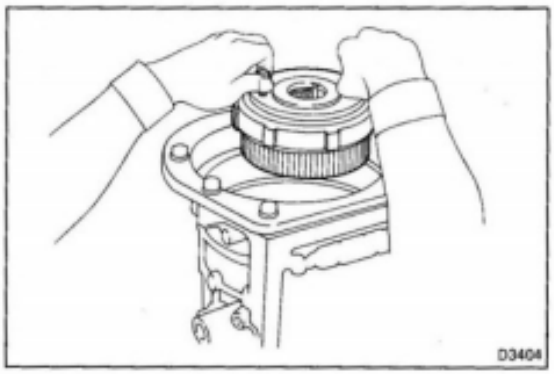

(c) Hold the drum by the bolts, and rotating it clockwise, install to the transmission case.

NOTE: If the one-way clutch drum will not rotate counterclockwise, check the installation of the one-way clutch.

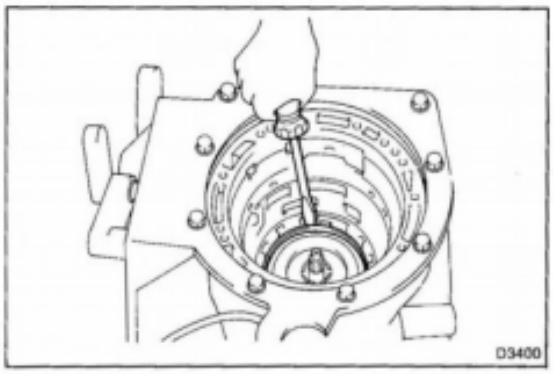

(d) Using a screwdriver, install the snap ring.

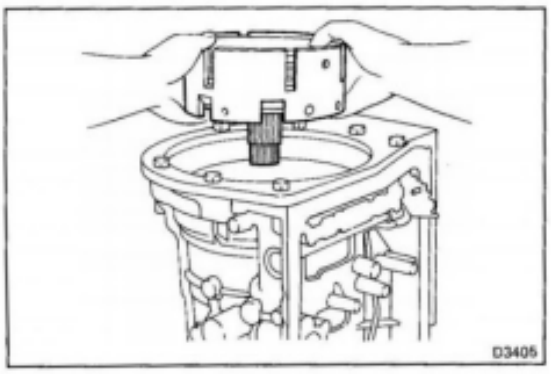

4. INSTALL CENTER SUPPORT

(a) Align the oil hole and bolt hole of the center support with those of the body side and insert the center support.

(b) Install and torque the three lock bolts.

NOTE: Since the bolts are temporarily installed, do not coat with sealer.

Torque: 250 kg-cm (18 ft-lb, 25 N·m)

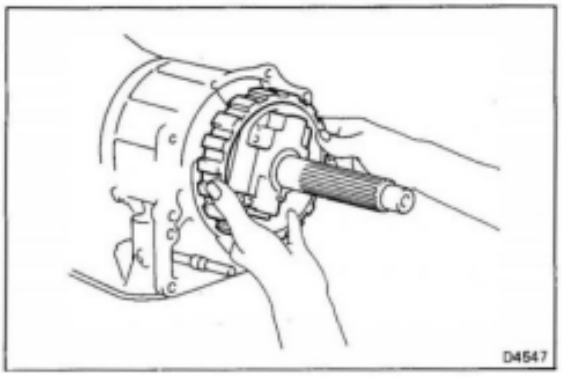

5. INSTALL GOVERNOR BODY

(a) Install the governor body onto the output shaft.

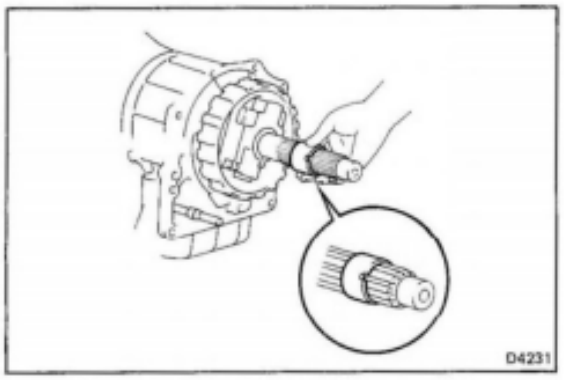

(b) Install the spacer onto the output shaft.

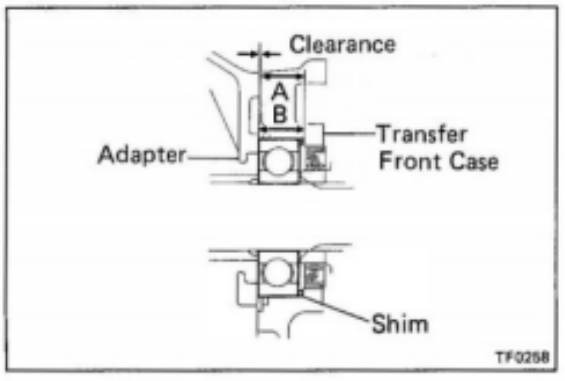

6. INSTALL ADJUSTING SHIM TO TRANSFER FRONT CASE

(a) Measure the difference of A and B (left) and select a shim of a thickness so the gap between the transfer adapter and front case is within the standard clearance.

Standard clearance: 0.4 – 0.5 mm (0.016 – 0.020 in.)

Adjusting shim thickness mm (in.)
2.3 (0.091)
2.4 (0.095)
2.5 (0.098)

(b) Install the adjusting shim to the transfer front case.

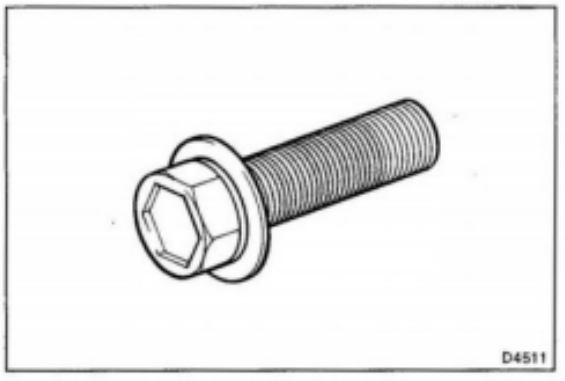

7. INSTALL TRANSFER ADAPTER

(a) Clean the threads of the bolt and case with white gasoline.

(b) Coat the threads of the bolts with sealer.

Sealer part No. 08833-00070 or THREE BOND 1324

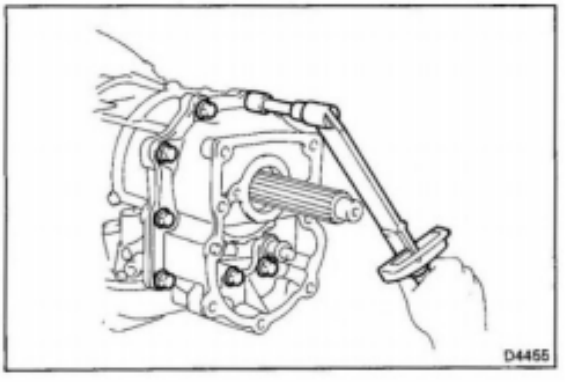

(c) Install the transfer adapter with a new gasket and torque the ten bolts.

Torque: 380 kg-cm (27 ft-lb, 37 N·m)

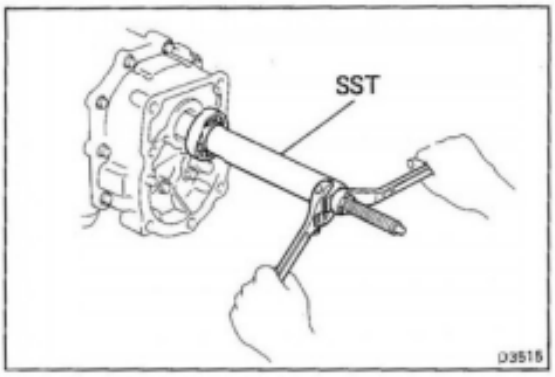

8. INSTALL TRANSMISSION REAR BEARING

Using SST, insert the transmission rear bearing.

SST 09309-36033

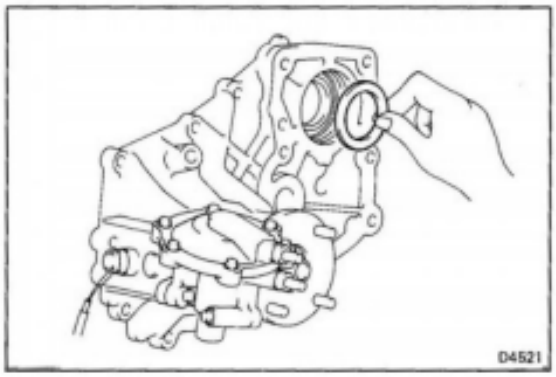

9. INSTALL TRANSFER FRONT CASE

(a) Install the spacer to the transfer front case.

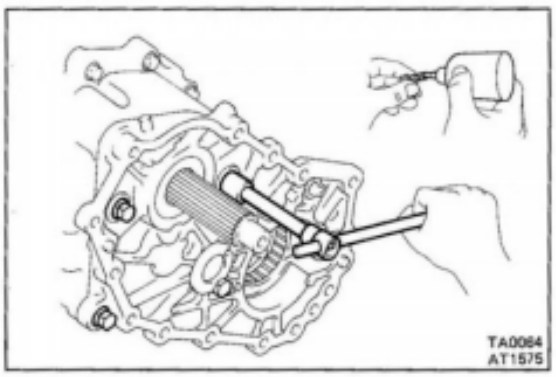

(b) Clean the threads of the bolts and case with white gasoline.

(c) Coat the threads of the bolts with sealer.

Sealer part No. 08833-00070 or THREE BOND 1324

(d) Install the transfer front case with a new gasket and torque the four bolts.

Torque: 650 kg-cm (47 ft-lb, 64 N·m)

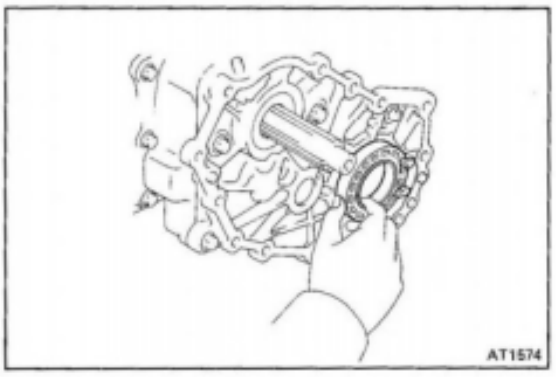

10. INSTALL REAR OUTPUT SHAFT FRONT BEARING RETAINER

Install the rear output shaft front bearing retainer.

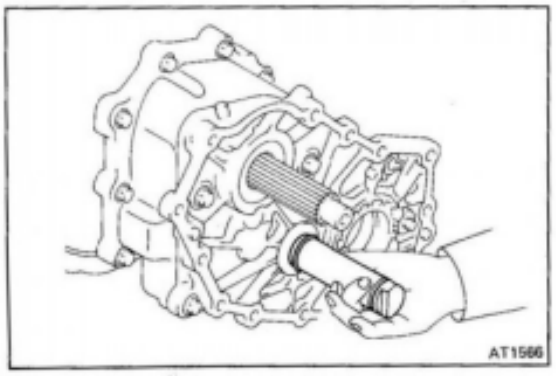

11. INSTALL IDLER GEAR AND IDLER GEAR SHAFT

(a) Apply gear oil to a new O-ring and install it to the idler gear shaft front side groove.

(b) Install the idler gear shaft to the transfer front case.

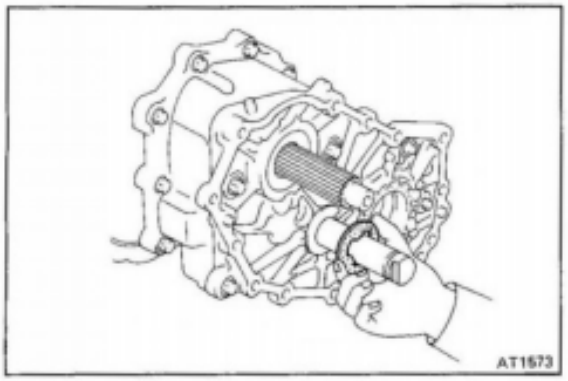

(c) Install the idler gear thrust washer.

NOTE: Be sure that protruding part of washer fits in the case groove.

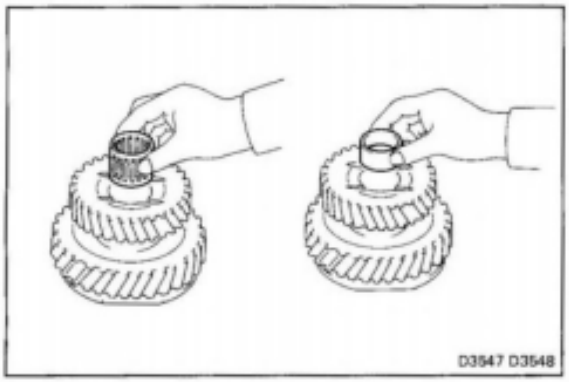

(d) Apply MP grease to the two bearings.

(e) Install the two bearings and spacer to the idler gear.

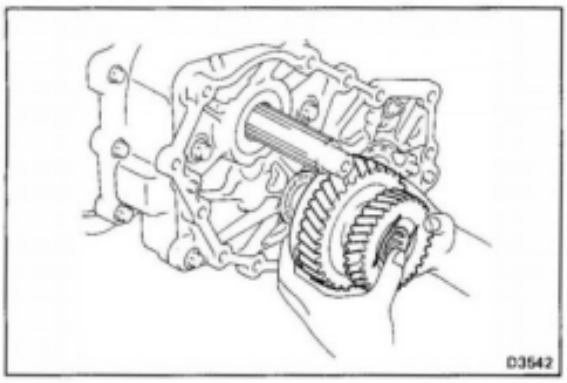

(f) Install the assembled idler gear, bearings and spacer to the idler gear shaft.

(g) Apply gear oil to a new O-ring and install it to the idler gear shaft rear side groove.

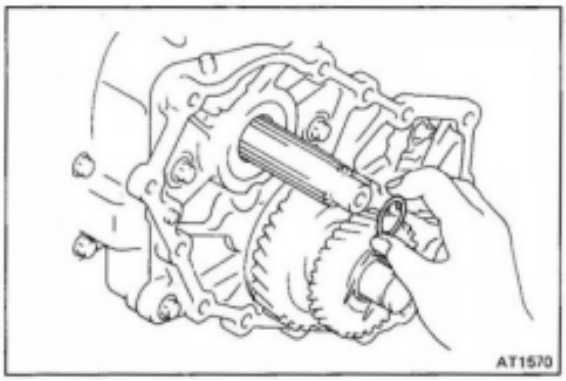

12. INSTALL O-RING TO TRANSMISSION OUTPUT SHAFT

Apply ATF to a new O-ring and install it to the transmission output shaft.

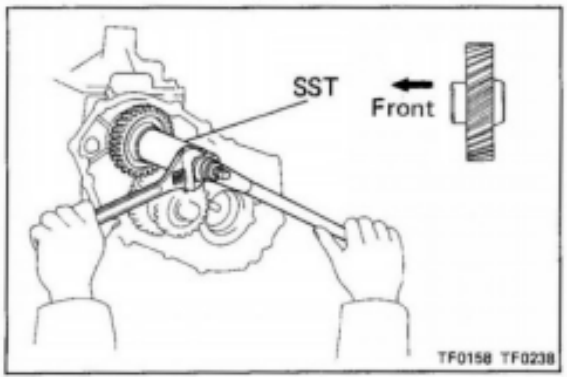

13. INSTALL TRANSFER INPUT GEAR

Using SST, install the transfer input gear.

SST 09309-36033

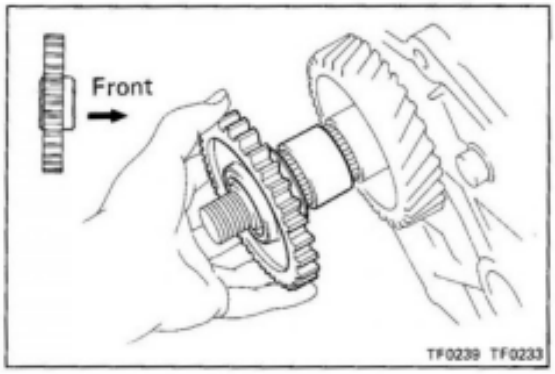

14. INSTALL POWER TAKE-OFF GEAR

(a) Install the spacer and power take-off gear to the transfer output shaft.

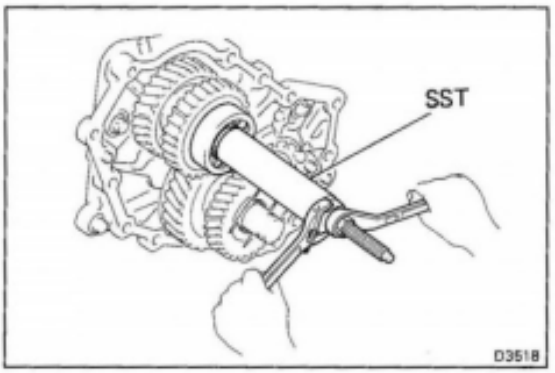

(b) Using SST, install the transmission output shaft rear bearing.

SST 09309-36033

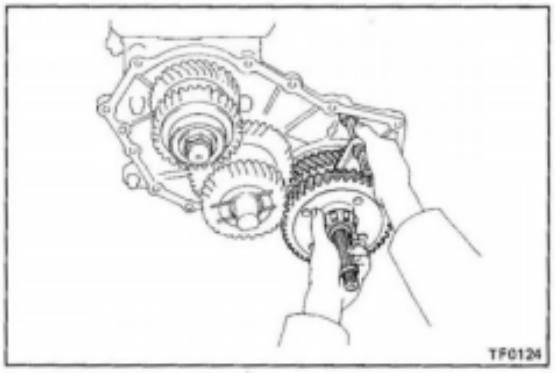

15. INSTALL REAR OUTPUT SHAFT WITH SHIFT FORK AND SHAFT

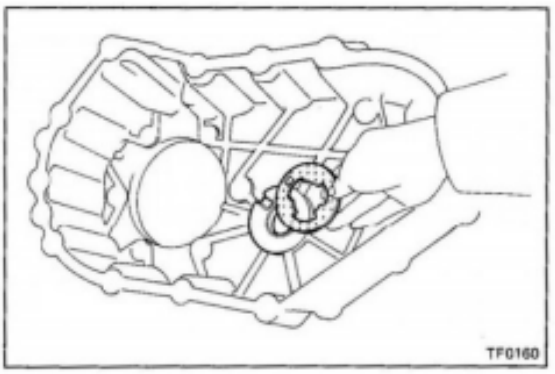

16. STICK ON THRUST WASHER

Stick the thrust washer to the transfer rear case with MP grease.

NOTE: Be sure the protruding part of washer fits in the case groove.

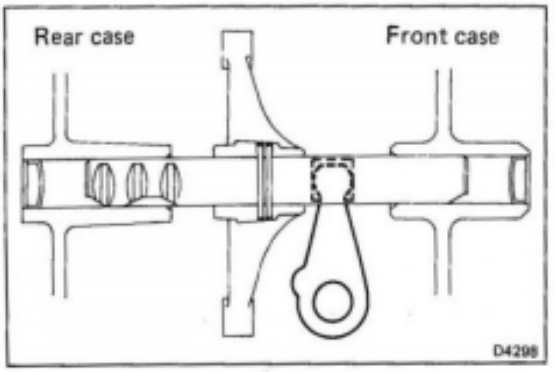

17. INSTALL TRANSFER REAR CASE

(a) Place a new gasket on the front case.

(b) While aligning the shift fork shaft and shifting lever, assemble the transfer rear case.

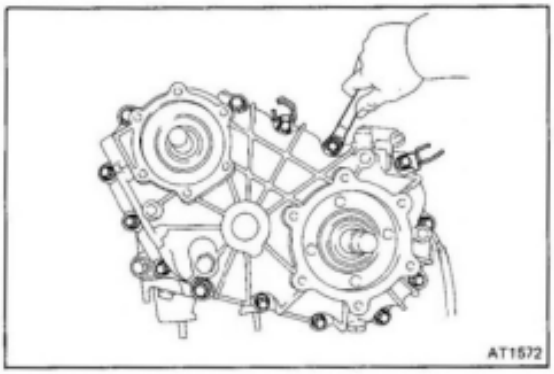

(c) Install and torque the fourteen bolts.

Torque: 12 mm 650 kg-cm (47 ft-lb, 64 N·m)
10 mm 400 kg-cm (29 ft-lb, 39 N·m)

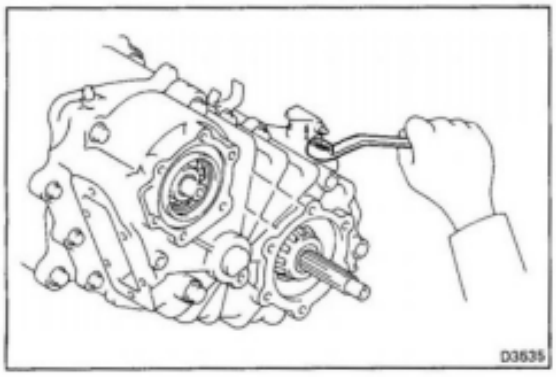

18. INSTALL SHIFT PLUG

(a) Clean the threads of the plug and case with white gasoline.

(b) Coat the threads of the plug with sealer.

Sealer part No. 08833-00070 or THREE BOND 1324

(c) Install the locking ball and spring and torque the plug.

Torque: 450 kg-cm (33 ft-lb, 44 N·m)

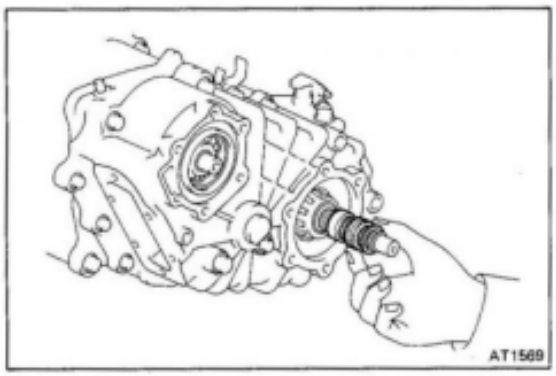

19. INSTALL SPACER, SPEEDOMETER DRIVE GEAR AND WASHER

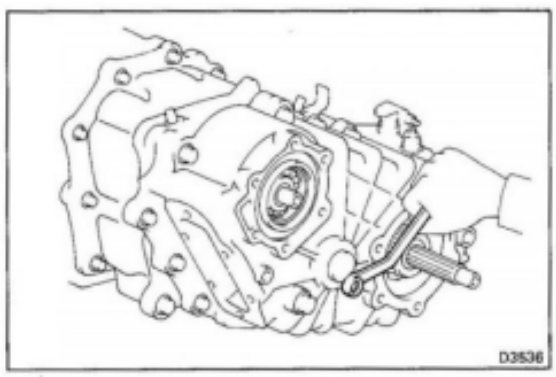

20. INSTALL IDLER GEAR SHAFT LOCK PLATE

Install the lock plate and bolt. Tighten the bolt.

Torque: 130 kg-cm (9 ft-lb, 13 N·m)

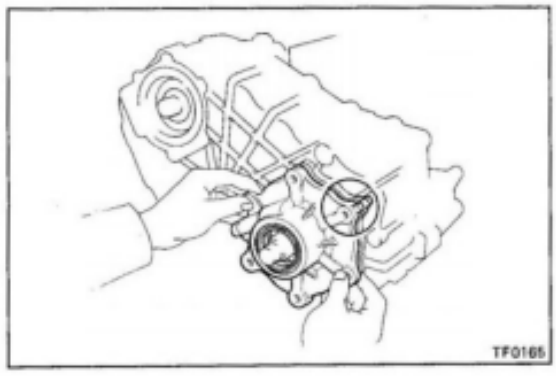

21. ADJUST REAR OUTPUT SHAFT BEARINGS PRELOAD

(a) Install the rear output shaft rear bearing retainer.

NOTE: Align the bearing retainer rib with the case.

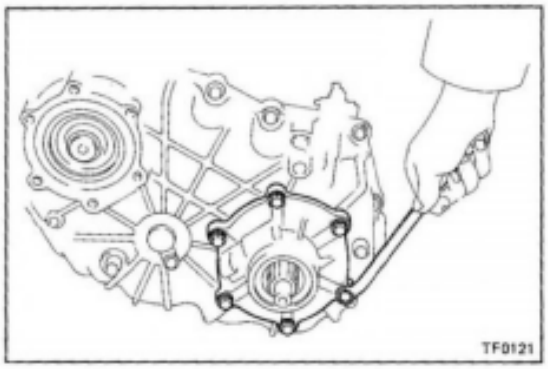

(b) Torque the six bolts.

Torque: 350 kg-cm (25 ft-lb, 34 N·m)

(c) Shift the transfer lever to the N position.

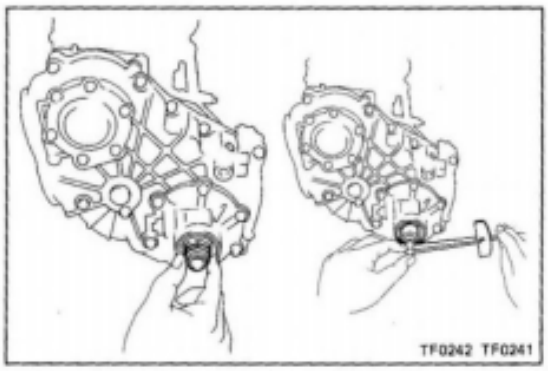

(d) Temporarily install the rear companion flange lock nut.

(e) Using a torque meter, measure the preload of the rear output shaft bearings. (Starting torque)

Preload:

New bearing	**15 – 24.7 kg-cm (13.0 – 21.4 in.-lb, 1.5 – 2.4 N·m)**
Reused bearing	**7 – 12 kg-cm (6.1 – 10.4 in.-lb, 0.7 – 1.2 N·m)**

If the preload is not within specification, remove the outer race of the rear output shaft rear bearing with SST.

Reselect an adjusting shim.

Mark	Thickness mm (in.)	Mark	Thickness mm (in.)
0	0.15 (0.0059)	10	1.0 (0.039)
4	0.4 (0.016)	11	1.1 (0.043)
5	0.5 (0.020)	12	1.2 (0.047)
6	0.6 (0.024)	13	1.3 (0.051)
7	0.7 (0.028)	14	1.4 (0.055)
8	0.8 (0.031)	15	1.5 (0.059)
9	0.9 (0.035)		

NOTE: The preload will change about 10.0 kg-cm (8.7 in.-lb, 1.0 N·m) with each shim thickness.

(f) Remove the rear companion flange lock nut.

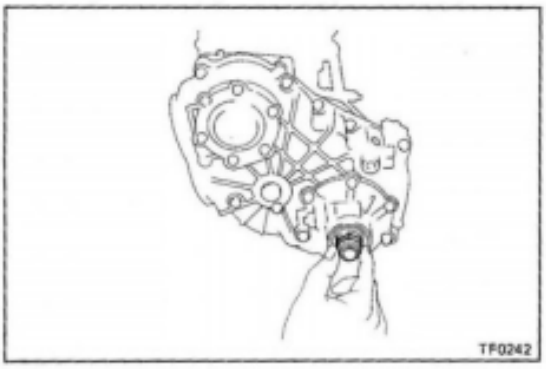

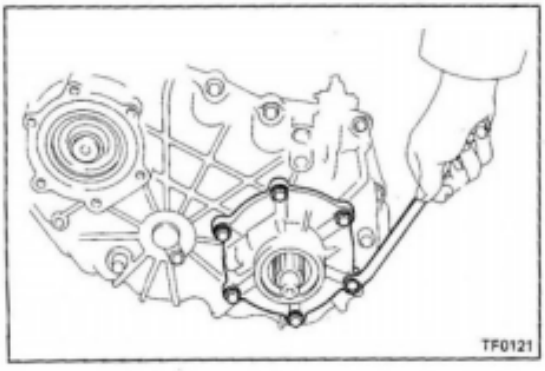

22. REMOVE REAR OUTPUT SHAFT REAR BEARING RETAINER

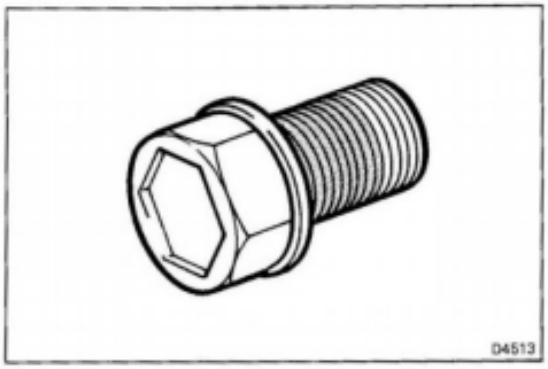

23. INSTALL REAR OUTPUT SHAFT REAR BEARING RETAINER

(a) Clean the threads of the bolts and case with white gasoline.

(b) Coat the threads of the bolts with sealer.

Sealer part No. 08833-00070 or THREE BOND 1324

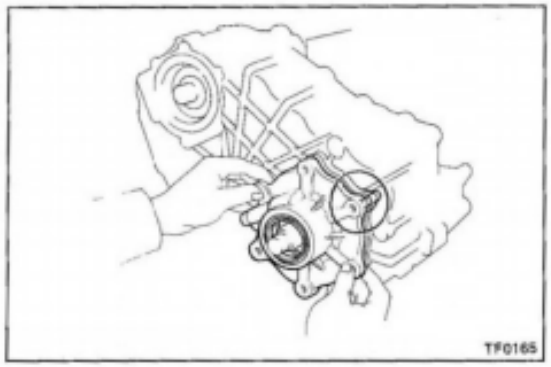

(c) Place a new gasket on the rear case.

(d) Install the rear output shaft rear bearing retainer.

NOTE: Align the bearing retainer rib with the case.

(e) Install and torque the six bolts.

Torque: 350 kg-cm (25 ft-lb, 34 N·m)

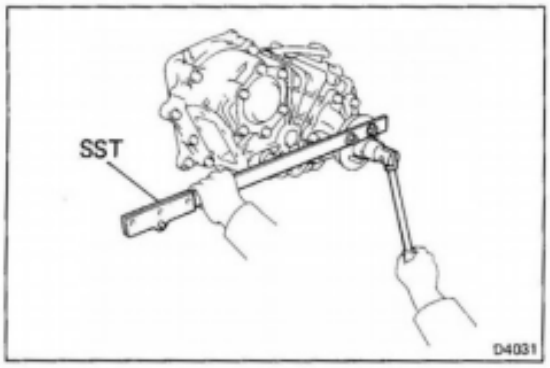

24. INSTALL REAR COMPANION FLANGE

(a) Install the companion flange.

(b) Using SST to hold the companion flange, install a new companion flange lock nut.

SST 09330-00021

Torque: 1,300 kg-cm (94 ft-lb, 127 N·m)

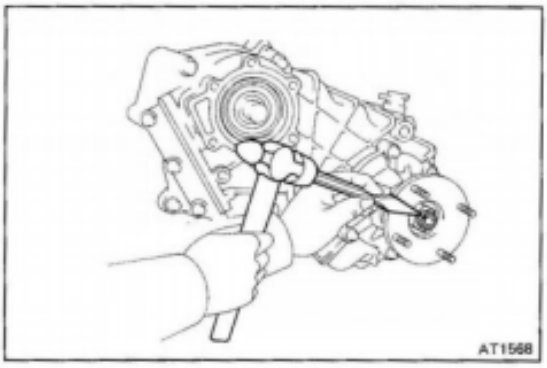

(c) Stake the companion flange lock nut.

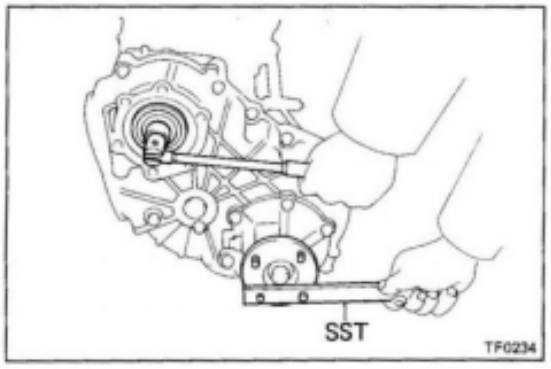

25. INSTALL TRANSMISSION OUTPUT SHAFT LOCK NUT

(a) Using SST to hold the companion flange, install a new transmission output shaft lock nut.

SST 09330-00021

Torque: 1,300 kg-cm (94 ft-lb, 127 N·m)

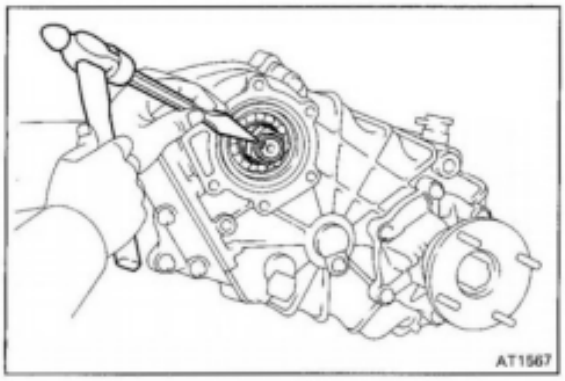

(b) Stake the transmission output shaft lock nut.

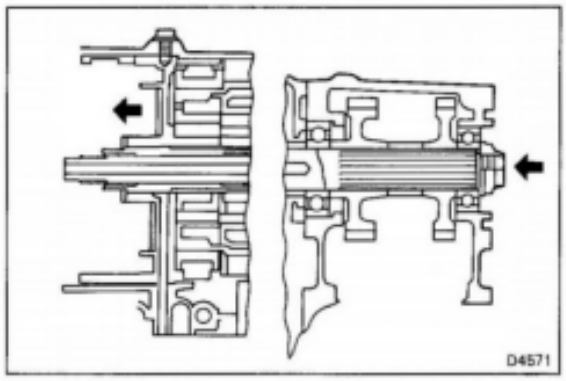

26. ADJUST CENTER SUPPORT THRUST CLEARANCE

(a) Face the transmission output shaft toward the front of the transmission, and push in using 5–10 kg (11.0–22.0 lb, 49–98 N) of pressure.

(b) Pull the center support toward the front of the transmission applying 5–10 kg (11.0–22.0 lb, 49–98 N) of pressure.

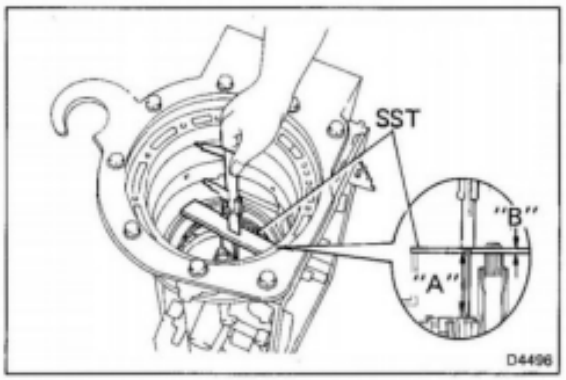

(c) Set SST on the center support as shown in the figure. Using calipers, measure the distance "A" between the top of SST and clutch drum.

SST 09350-36010 (09350-06090)

(d) Using a calipers, measure the SST thickness "B."

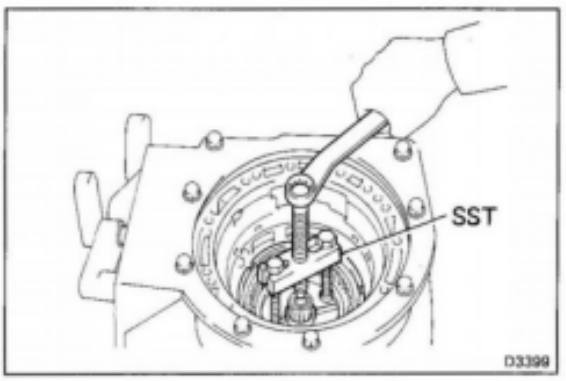

(e) Remove three center support lock bolt.

(f) Using SST, remove the center support.

SST 09350-36010 (09350-06140)

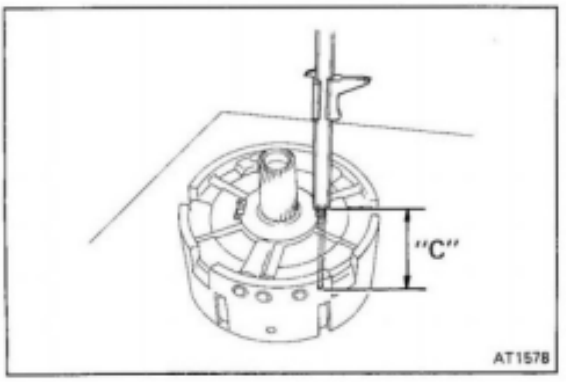

(g) Turn over the center support and plate it on a flat surface. Inserting calipers into the thrust washer hole, measure the distance "C" between it and the surface.

Center support thrust clearance = A – (B + C)

Standard clearance : 0.3 – 0.7 mm (0.012 – 0.028 in.)

Maximum clearance: 0.9 mm (0.035 in.)

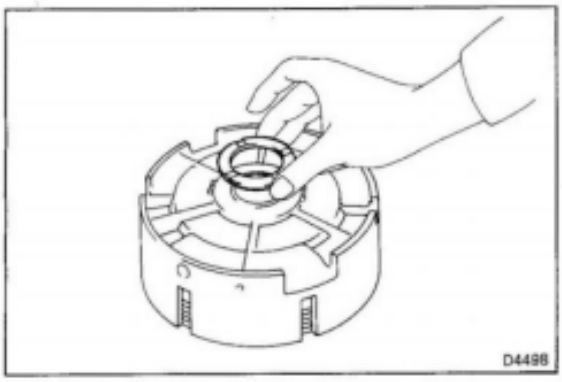

(h) Select a washer to make the space between the center support and one-way clutch standard.

Thrust washer thickness mm (in.)
1.8 (0.071)
2.1 (0.083)
2.4 (0.094)
2.6 (0.102)

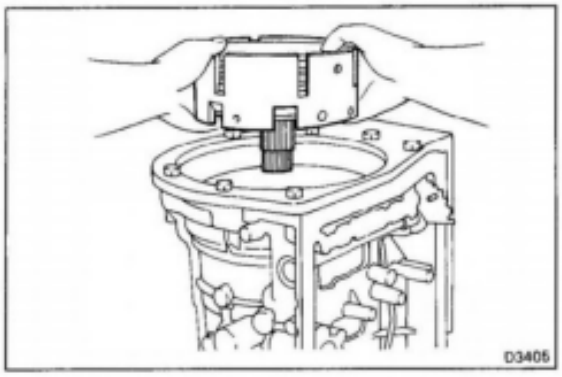

(i) Coat new three O-rings with ATF and install them to the center support.

(j) Align the oil hole and bolt hole of the center support with those of the body side and insert the center support.

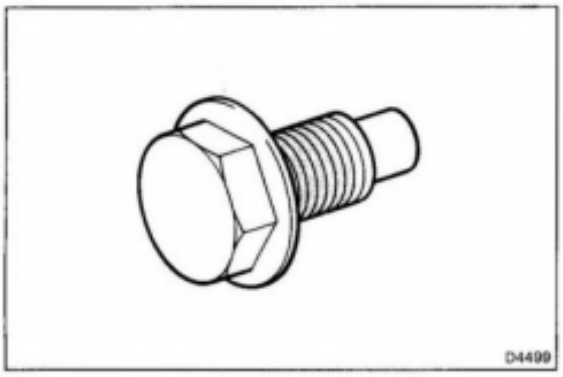

(k) Clean the threads of the bolts and case with white gasoline.

(l) Coat the threads of the bolts with sealer.

Sealer: LOCTITE 242

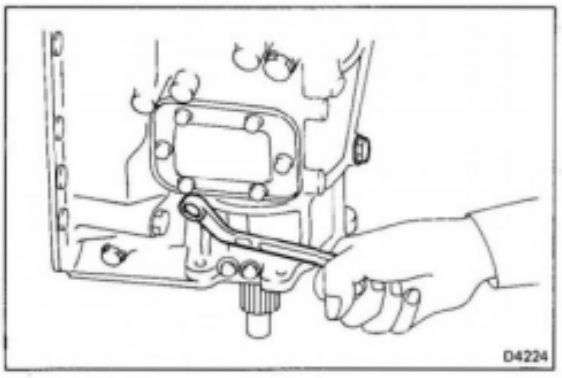

(m) Install and torque the center support lock bolts.

Torque: 250 kg-cm (18 ft-lb, 25 N·m)

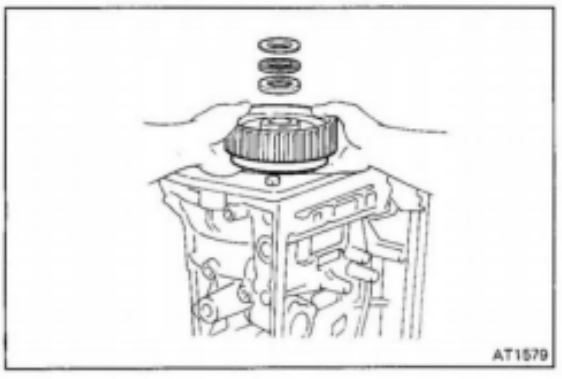

27. INSTALL REAR CLUTCH ASSEMBLY IN CASE

(a) Align flukes of the clutch disc and mesh them with the rear clutch. Push the rear clutch assembly into the case.

(b) Install the thrust bearing and two races on rear clutch.

mm (in.)

	Outer diameter	Inner diameter
Upper race	50.4 (1.984)	32.8 (1.291)
Lower race	52.0 (2.047)	37.0 (1.457)
Thrust bearing	52.0 (2.047)	34.7 (1.366)

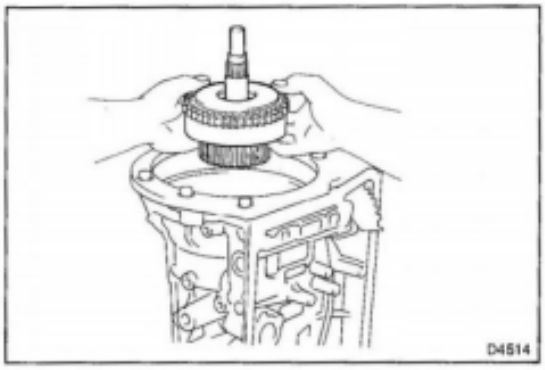

28. INSTALL FRONT CLUTCH ASSEMBLY

Align flukes of the rear clutch disc and mesh them with the front clutch hub. Push the front clutch assembly into the case.

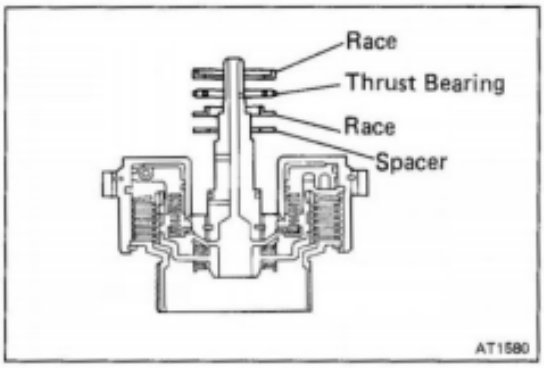

29. INSTALL THRUST BEARING AND RACES

mm (in.)

	Outer diameter	Inner diameter
Upper race	52.0 (2.047)	37.0 (1.457)
Lower race	50.4 (1.984)	32.8 (1.291)
Thrust bearing	52.0 (2.047)	34.7 (1.366)

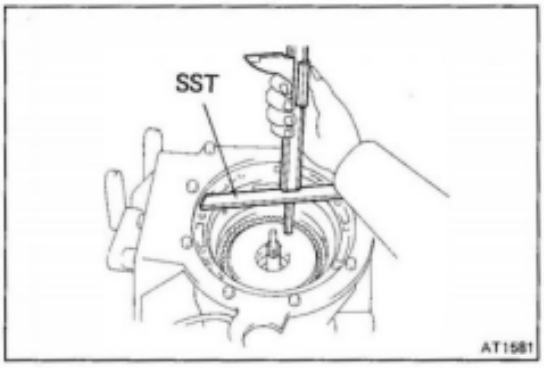

30. CHECK CORRECT INSTALLATION OF FRONT CLUTCH

Set SST on the transmission case as shown in the figure. Measure the distance between the top surface of SST and front clutch assembly. If the distance corresponds to that during disassembly, the front clutch is installed correctly.

SST 09350-36010 (09350-06090)

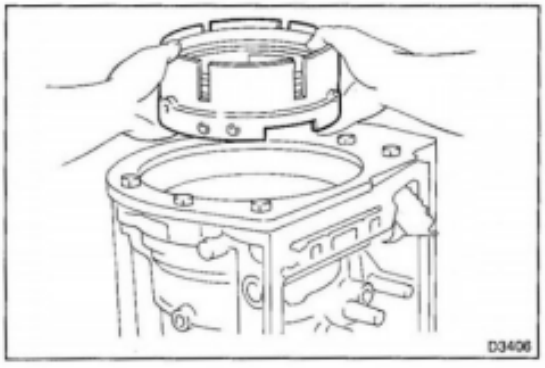

31. INSTALL OVERDRIVE SUPPORT

(a) Align the oil hole and bolt hole of the overdrive support with those of body side and install the overdrive support.

(b) Install and torque the three lock bolts.

NOTE: Since the bolts are temporarily installed, do not coat with sealer.

Torque: 250 kg-cm (18 ft-lb, 25 N·m)

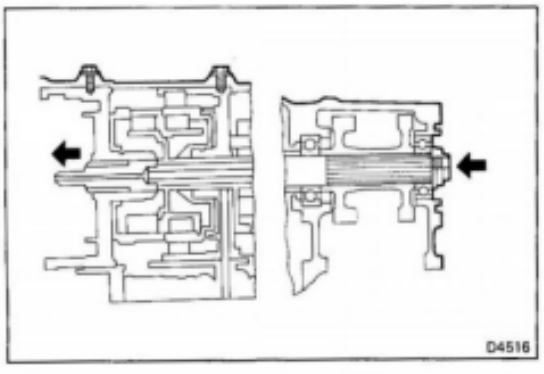

(c) Face the transmission output shaft toward the front of the transmission, and push in using 5–10 kg (11.0–22.0 lb, 49–98 N) of pressure.

(d) Pull the overdrive support toward the front of the transmission applying 5–10 kg (11.0–22.0 lb, 49–98 N) of pressure.

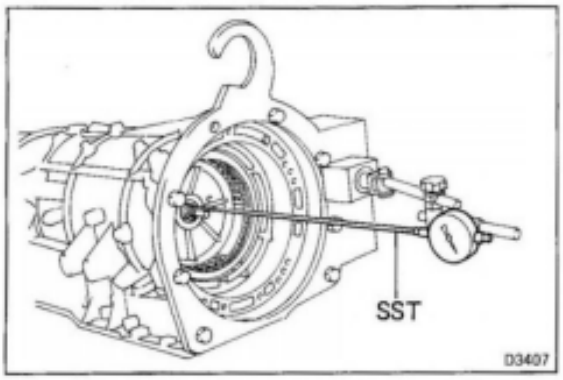

(e) Set the dial indicator installed by the SST to the input shaft face, and measure the input shaft thrust clearance.

SST 09350-36010 (09350-06130)

(f) Check that the thrust clearance of the input shaft is standard. If it exceeds the maximum, select a new spacer.

Standard clearance : 0.3 – 0.7 mm (0.012 – 0.028 in.)
Maximum clearance: 0.7 mm (0.028 in.)

Spacer thickness mm (in.)	
0.9	(0.035)
1.2	(0.047)
1.5	(0.059)
1.8	(0.071)
2.1	(0.083)

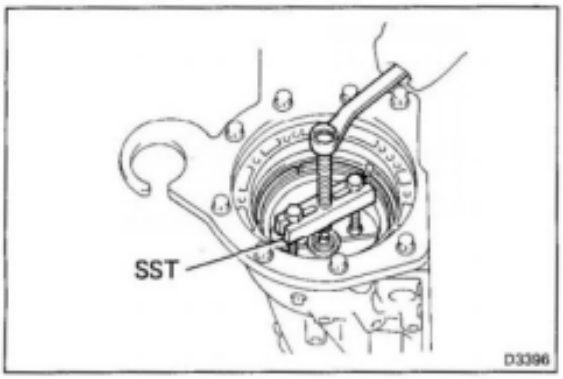

(g) Remove the three overdrive support lock bolts.

(h) Using SST, remove the overdrive support.

SST 09350-36010 (09350-06140)

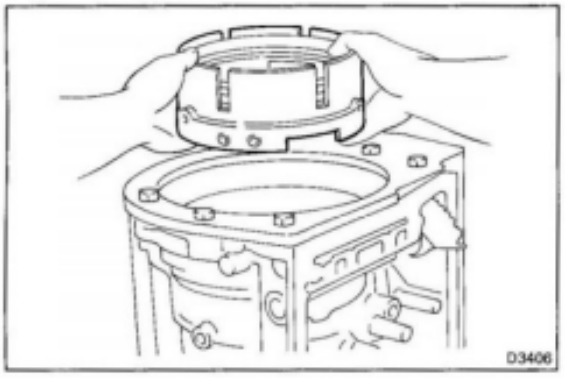

(i) Apply ATF to three new O-rings and install it to the overdrive support.

(j) Align the oil hole and bolt hole of the overdrive support with those of the body side and insert the overdrive support.

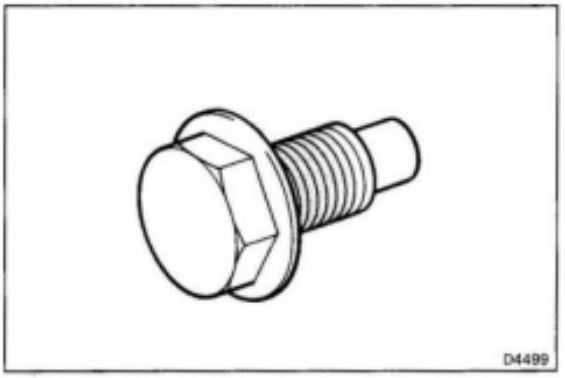

(k) Clean the threads of the bolts and case with white gasoline.

(l) Coat the threads of the bolts with sealer.

Sealer part LOCTITE 242

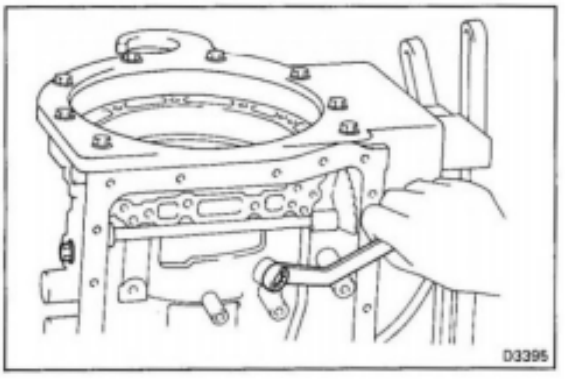

(m) Install and torque the overdrive support lock bolts.

Torque: 250 kg-cm (18 ft-lb, 25 N·m)

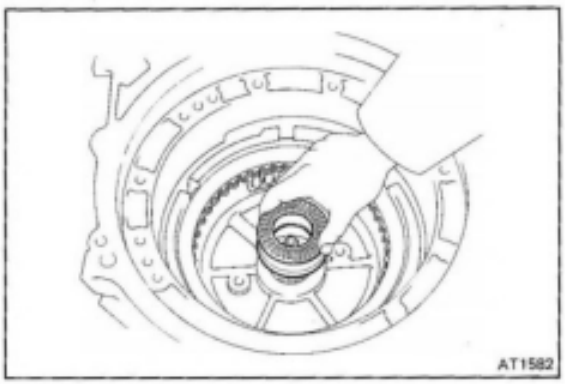

(n) Install the race on the overdrive support.

mm (in.)

	Outer diameter	Inner diameter
Race	52.0 (2.047)	37.0 (1.457)

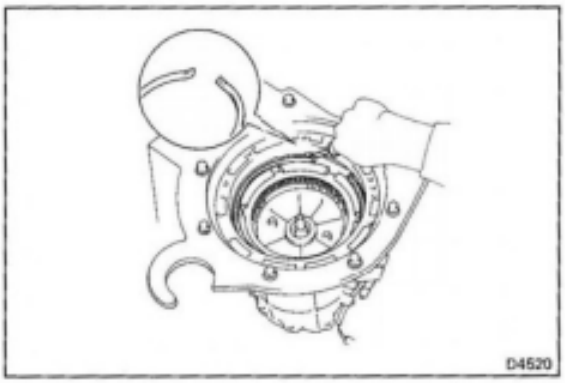

(o) Install the snap ring.

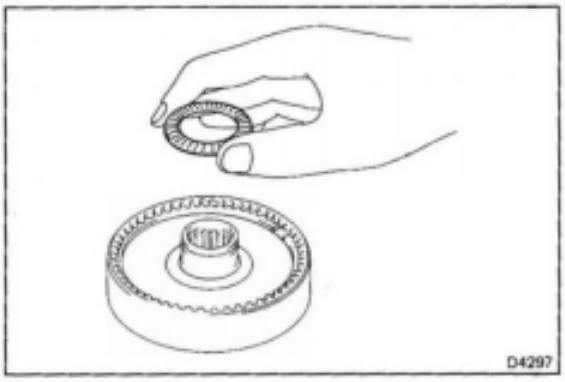

(p) Coat the bearing with petroleum jelly, and install it onto the overdrive planetary gear.

mm (in.)

	Outer diameter	Inner diameter
Bearing	52.0 (2.047)	34.7 (1.366)

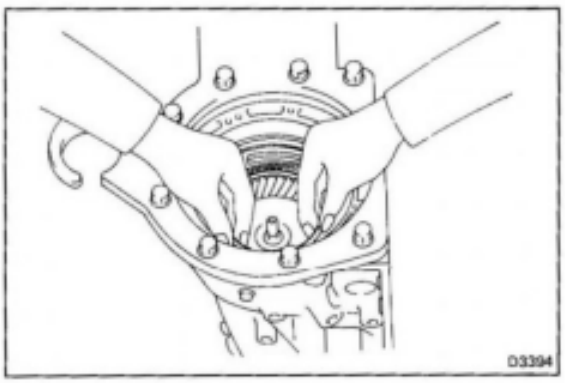

(q) Install the overdrive ring gear to the overdrive support.

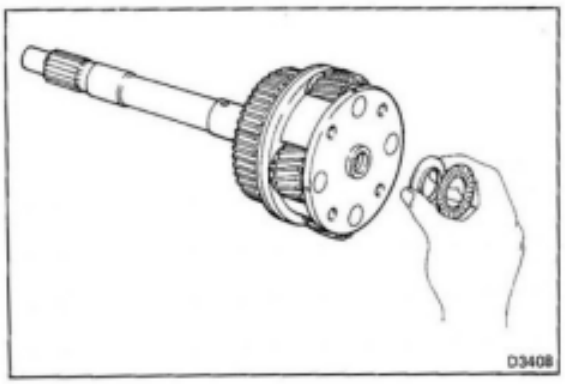

32. INSTALL OVERDRIVE DIRECT CLUTCH ASSEMBLY

(a) Coat the race and bearing with petroleum jelly, and install them onto the overdrive planetary gear.

mm (in.)

	Outer diameter	Inner diameter
Bearing	42.0 (1.654)	25.0 (0.984)
Race	42.0 (1.654)	23.2 (0.913)

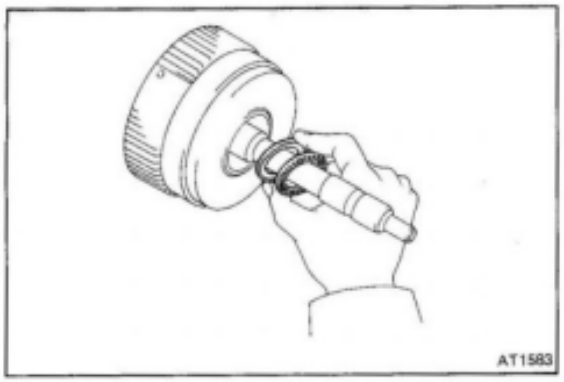

(b) Install the race and bearing onto the overdrive clutch assembly.

	Outer diameter	Inner diameter
Race	48.0 (1.890)	28.5 (1.122)
Bearing	46.2 (1.819)	28.5 (1.122)

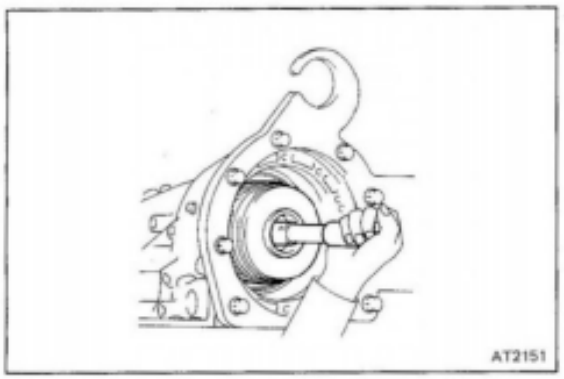

(c) Install the assembled overdrive planetary gear and overdrive clutch assembly to the overdrive support.

NOTE: Place the transmission case flat and install the overdrive planetary gear taking care that its bearing and race do not fall off.

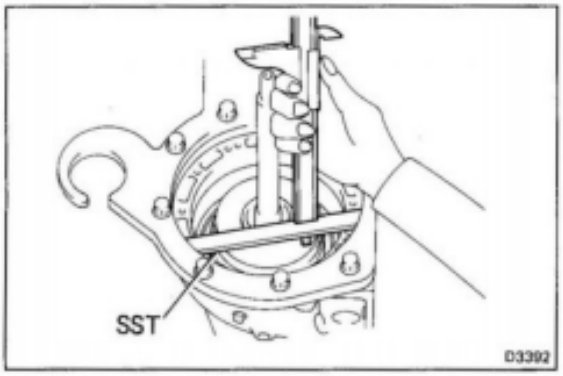

33. CHECK CORRECT INSTALLATION OF OVERDRIVE CLUTCH

Set SST on the transmission case as shown in the figure. Measure the distance between the top surface of SST and front clutch assembly. If the distance corresponds to that during disassembly, the overdrive clutch is installed correctly.

SST 09350-36010 (09350-06090)

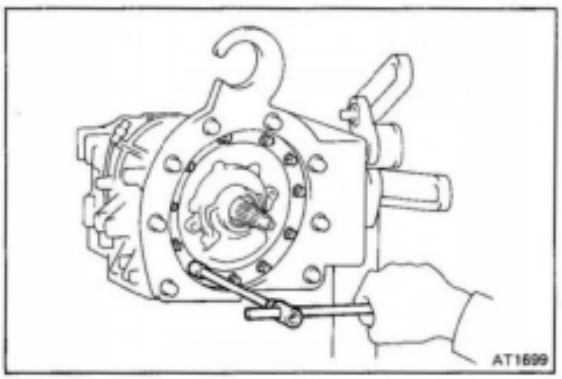

34. INSTALL OIL PUMP ASSEMBLY

(a) Install the race onto the oil pump assembly.

mm (in.)

	Outer diameter	Inner diameter
Race	43.0 (1.693)	27.1 – 28.3 (1.067 – 1.114)

(b) Place the gasket onto the transmission case.

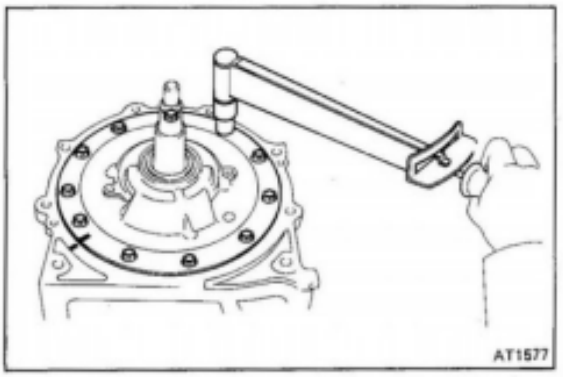

(c) Align the matchmarks on the transmission case and oil pump assembly.

(d) Using a plastic hammer, tap the oil pump body and install the oil pump assembly to the transmission case.

(e) Tighten the set bolts gradually and evenly.

Torque: 210 kg-cm (16 ft-lb, 21 N·m)

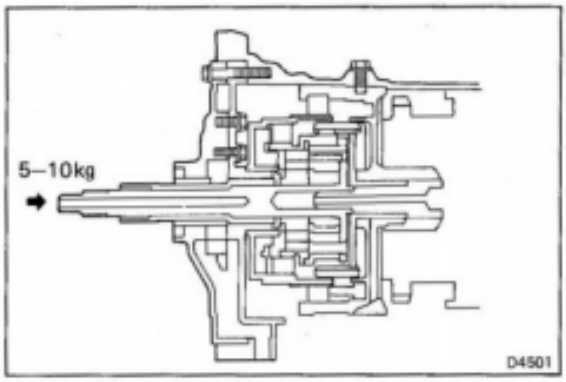

35. INSPECT OVERDRIVE INPUT SHAFT THRUST CLEARANCE

(a) Face the overdrive input shaft toward the rear of the transmission, and press in using 5–10 kg (11.0–22.0 lb, 49–98 N) of pressure.

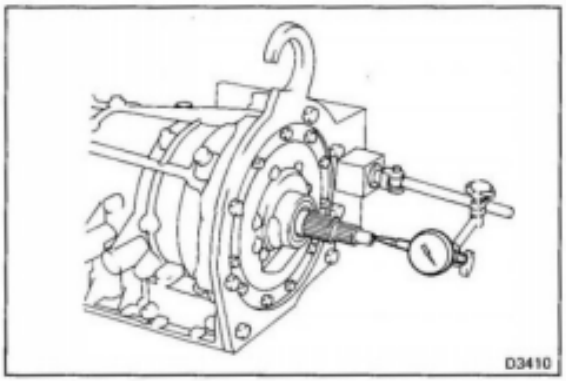

(b) Set the dial indicator into the input shaft.

(c) Check that the thrust clearance of the input shaft is standard. If it exceeds the maximum, select a new race.

Standard clearance : 0.4 – 0.9 mm (0.016 – 0.035 in.)
Maximum clearance: 0.9 mm (0.035 in.)

Race thickness mm (in.)	
0.8	(0.031)
1.0	(0.039)
1.4	(0.055)

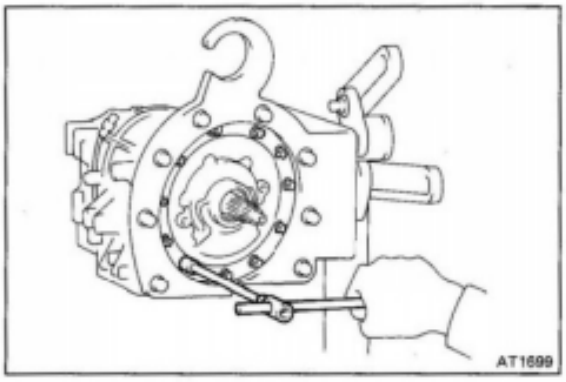

(d) Remove the oil pump set bolts.

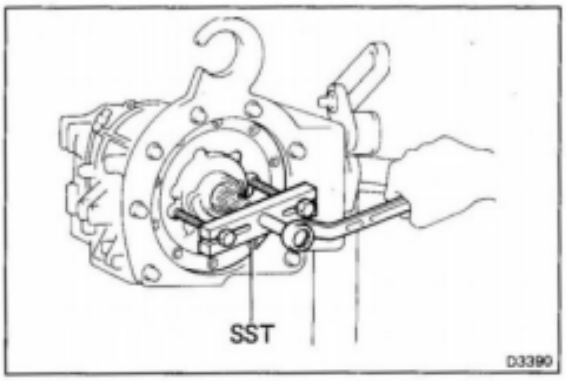

(e) Remove the oil pump set bolt.

(f) Using SST, remove the oil pump assembly.

SST 09350-36010 (09350-06140)

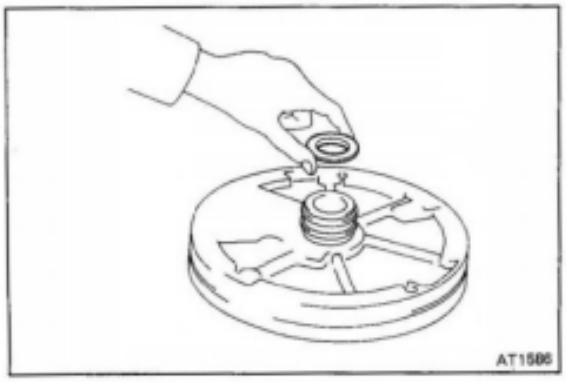

(g) Coat a new O-ring with ATF and install it to the oil pump assembly.

(h) Assemble bearing of step 35-(c) to the oil pump.

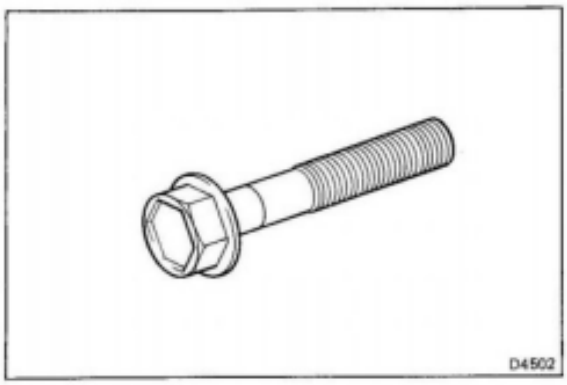

(i) Clean the threads of the bolts and case with white gasoline.

(j) Coat the threads of the bolts with sealer.

Sealer part LOCTITE 242

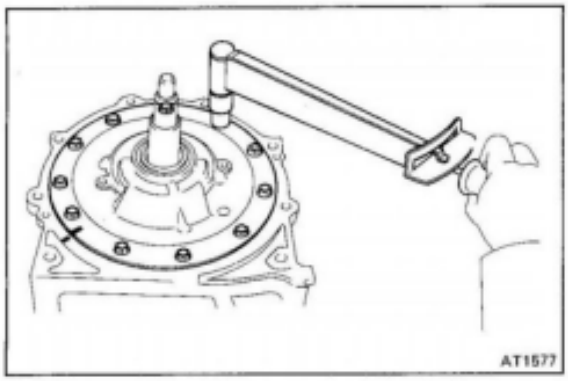

(k) Place a new gasket onto the transmission case.

(l) Align the matchmarks on the transmission case and oil pump body.

(m) Using a plastic hammer, tap the oil pump body and install the oil pump assembly to the transmission case.

(n) Tighten the set bolts gradually and evenly.

Torque: 210 kg-cm (18 ft-lb, 25 N·m)

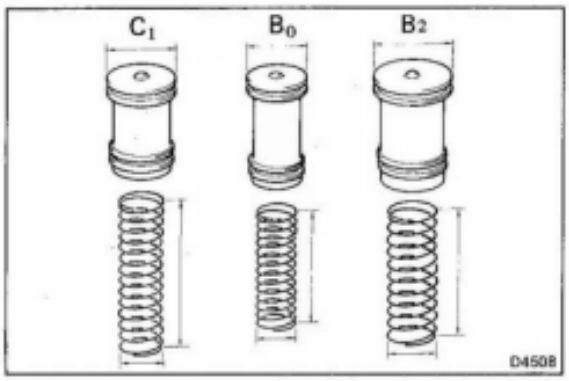

36. INSTALL C_2, B_0, B_2 ACCUMULATOR PISTONS AND SPRINGS

(a) Coat the O-rings with ATF and install it to the piston.

(b) Install the three springs and accumulator pistons to the transmission case.

Accumulator piston mm (in.)

Piston	Outer diameter
C_2	35.87 (1.4122)
B_0	29.87 (1.1760)
B_2	39.87 (1.5697)

Spring mm (in.)

Spring		Color	Free length	Outer diameter
C_2		white	80.00 (3.1496)	21.80 (0.8583)
B_0	HJ	none	63.06 (2.4827)	20.70 (0.8150)
	FJ	none	64.09 (2.5232)	21.05 (0.8287)
B_2		yellow	65.00 (2.5591)	25.10 (0.9882)

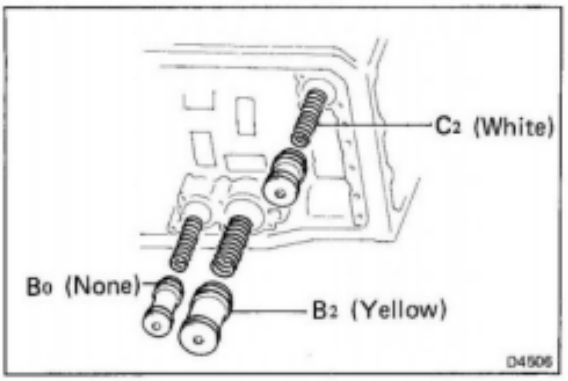

37. INSTALL THROTTLE CABLE

(a) Coat the O-ring with ATF and install it to the throttle cable.

(b) Push the cable through the transmission case, being careful not to damage the O-ring. Check for full seating.

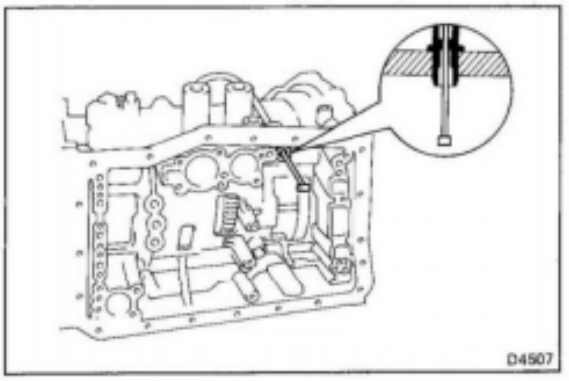

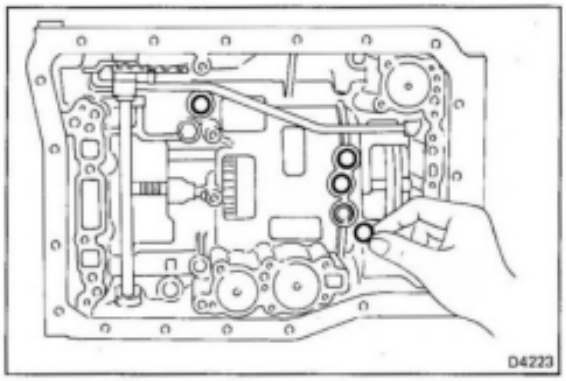

38. INSTALL FOUR TRANSMISSION APPLICATION GASKETS

Install the four transmission application gaskets facing the pitted side toward the transmission case.

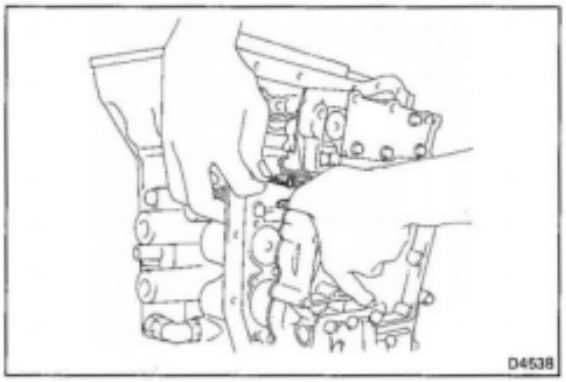

39. CONNECT THROTTLE CABLE TO CAM

Push the cable fitting into the cam.

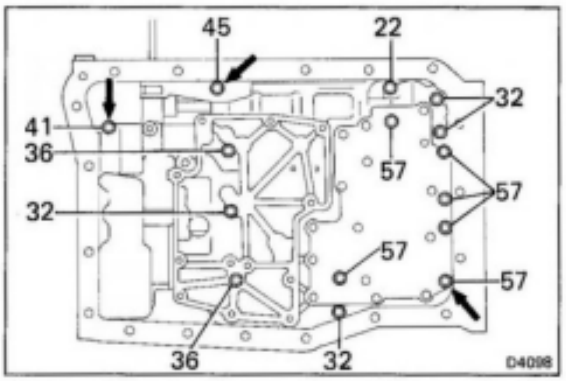

40. INSTALL VALVE BODY

(a) Install the three bolts indicated by the arrows.

(b) Install the other bolts.

(c) Check that the manual valve lever contacts the center of the roller at the tip of the detent spring.

(d) Tighten the bolts.

Torque: 100 kg-cm (7 ft-lb, 10 N·m)

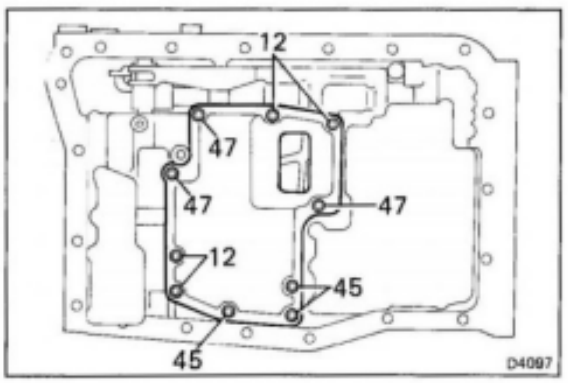

41. INSTALL OIL STRAINER AND BOLTS

(a) Place a new gasket on the valve body.

(b) Install the bolts as shown.

Torque: 5 mm 55 kg-cm (48 in.-lb, 5.4 N·m)
6 mm 100 kg-cm (7 ft-lb, 10 N·m)

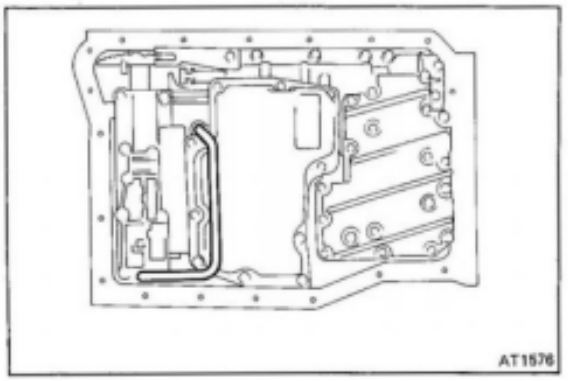

42. INSTALL OIL TUBE

(a) Remove the lock up relay valve body plate.

NOTE: Do not drop the lock up relay valve pins.

(b) Tap the tube with a plastic hammer to install it into the position indicated in the figure.

CAUTION: Be careful not to bend or damage the tube.

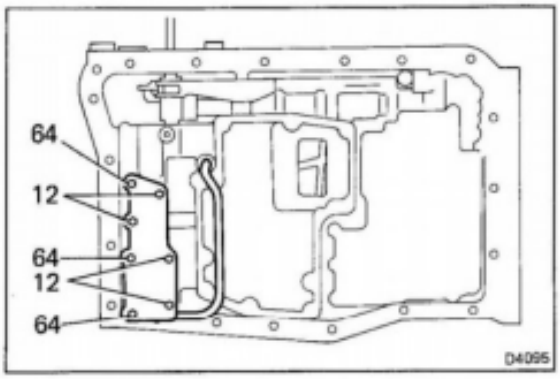

(c) Place a new gasket on the valve body.

(d) Install the lock up relay valve body plate and install the bolts.

NOTE: Each bolts length (mm) is indicated in the figure.

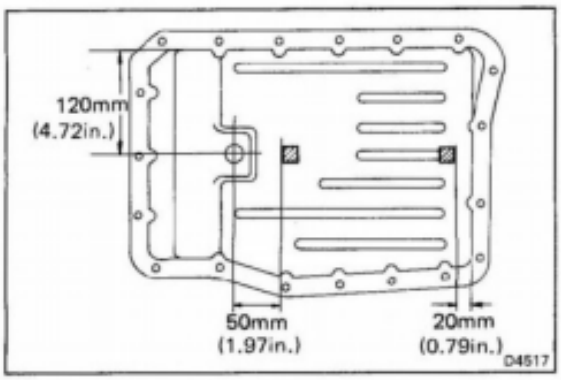

43. INSTALL TWO MAGNETS IN PAN

Install two magnets as shown in the figure.

CAUTION: Make sure that the two magnets do not interfere with the oil tube.

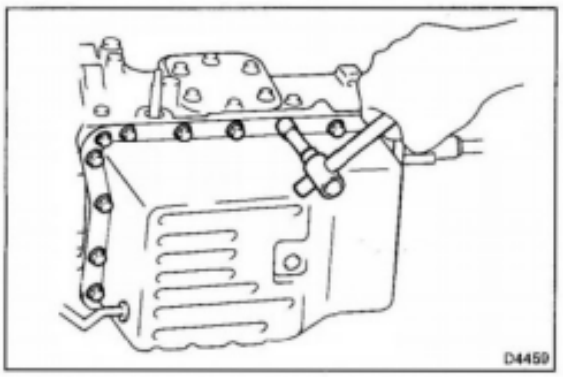

44. INSTALL PAN WITH NEW GASKET

(a) Place a new gasket on the transmission case.

(b) Tighten the twently bolts evenly.

Torque: 70 kg-cm (61 in.-lb, 6.9 N·m)

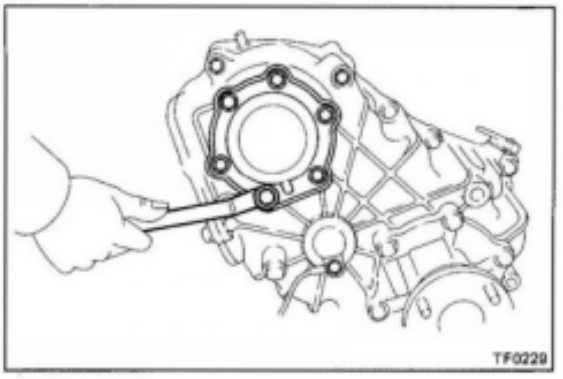

45. INSTALL TRANSFER NO. 2 CASE COVER

(a) Clean the threads of the bolts and case with white gasoline.

(b) Coat the threads of the bolts with sealer.

Sealer part No. 08833-00070 or THREE BOND 1324

(c) Install the transfer No. 2 case cover with a new gasket, and torque the six bolts.

Torque: 155 kg-cm (11 ft-lb, 15 N·m)

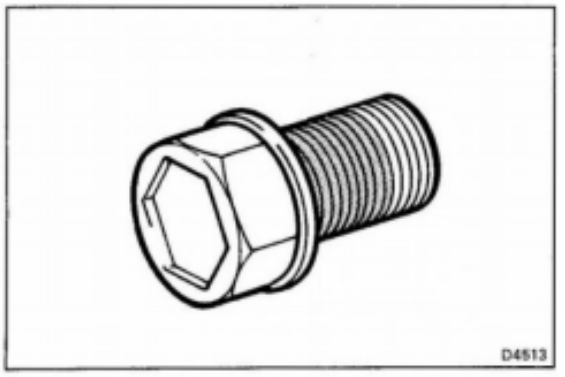

46. INSTALL POWER TAKE-OFF COVER

(a) Clean the threads of the two bolts and case with white gasoline.

(b) Coat the threads of the two bolts with sealer.

Sealer part No. 08833-00070 or THREE BOND 1324

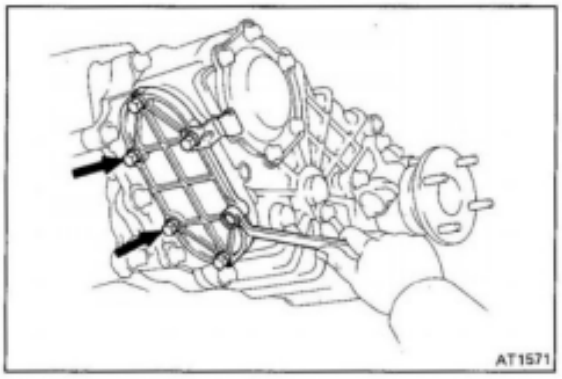

(c) Install the power take-off cover with a new gasket.

(d) Install and torque the two sealer coated bolts as shown in the figure.

Torque: 170 kg-cm (12 ft-lb, 17 N·m)

(e) Install and torque the other bolts.

Torque: 185 kg-cm (13 ft-lb, 18 N·m)

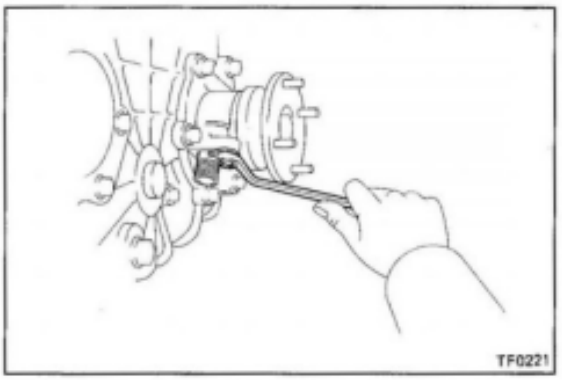

47. INSTALL SPEEDOMETER DRIVEN GEAR

(a) Coat the O-ring with gear oil and install it to the speedometer driven gear.

(b) Install the speedometer driven gear and lock plate, and torque the bolt.

Torque: 130 kg-cm (9 ft-lb, 13 N·m)

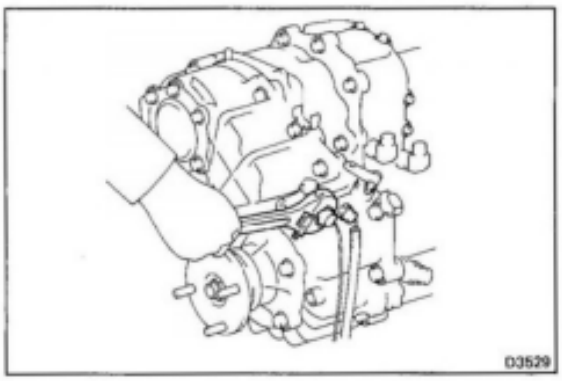

48. INSTALL TRANSFER NEUTRAL POSITION SWITCH AND TRANSFER L4 POSITION SWITCH

(a) Install the transfer L4 position switch.

Torque: 400 kg-cm (29 ft-lb, 39 N·m)

(b) Install the transfer neutral position switch.

Torque: 400 kg-cm (29 ft-lb, 39 N·m)

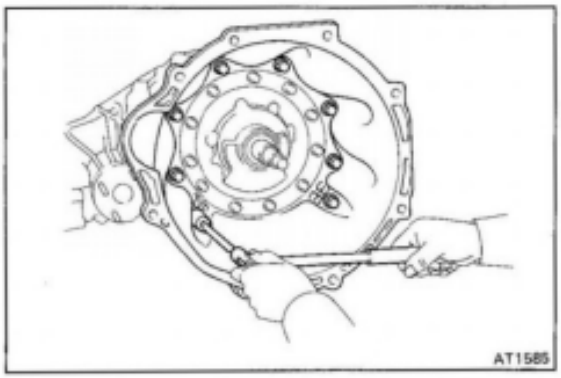

49. INSTALL TRANSMISSION HOUSING

Install the transmission housing to the transmission case and torque the bolts.

Torque: 650 kg-cm (47 ft-lb, 64 N·m)

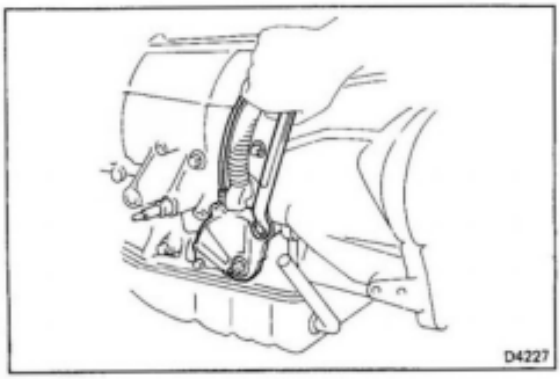

50. INSTALL NEUTRAL START SWITCH

(a) Install the neutral start switch and torque the bolts.

Torque: 130 kg-cm (9 ft-lb, 13 N·m)

(b) Install the grommet and lock washer, and torque the nut.

Torque: 70 kg-cm (61 in.-lb, 6.9 N·m)

(c) Using a screwdriver, stake the lock washer.

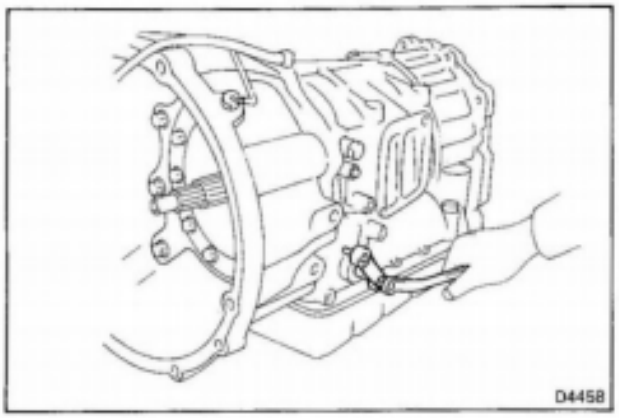

51. INSTALL CONTROL SHAFT LEVER

Install the control shaft lever with the two nuts.

Torque: 130 kg-cm (9 ft-lb, 13 N·m)

52. INSTALL TUBE AND OIL FILLER GAUGE

(a) Coat the O-ring with ATF and install it to the tube.

(b) Install the tube and oil filler gauge.

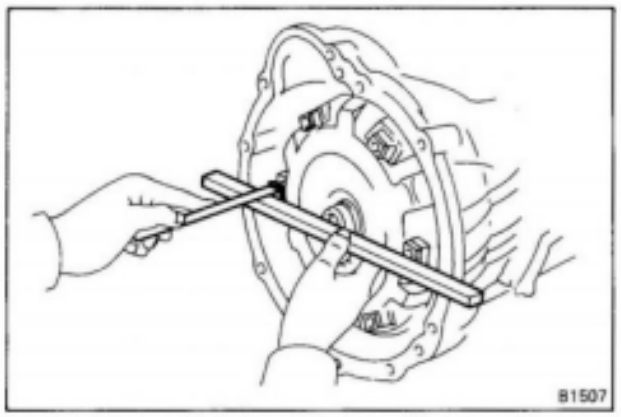

53. INSTALL TORQUE CONVERTER

54. CHECK TORQUE CONVERTER INSTALLATION

Using calipers and a straight edge, measure from the installed surface to the front surface of the transmission housing.

Correct distance:

3F engine 16.5 mm (0.650 in.) or more
2H engine 41.2 mm (1.622 in.) or more

CAUTION: Install the converter holizontaly to prevent oil seal from damage.

ASSEMBLY OF TRANSMISSION (A440L)

Disassembly, inspection and assembly of each component group has been indicated in the preceding chapter. Before assembly, make sure, all the component groups are assembled correctly.

If something wrong is found in a certain component group during assembly, inspect and repair this group immediately. Recommended ATF: DEXRON® II.

GENERAL ASSEMBLY NOTES:

1. The automatic transmission is composed of highly precision-finished parts, necessitating careful inspection before assembly because even a small nick could cause fluid leakage or affect performance.
2. Before assembling new clutch discs, soak them in automatic transmission fluid for at least thirty minutes.
3. Apply automatic transmission fluid on the sliding or rotating surfaces of parts before assembly.
4. Use petroleum jelly to keep small parts in their places.
5. Do not use adhesive cements on gaskets and similar parts.
6. When assembling the transmission, be sure to use new gaskets and O-rings.
7. Dry all parts with compressed air – never use shop rags.
8. Be sure to install the thrust bearings and races in the correct direction and position.

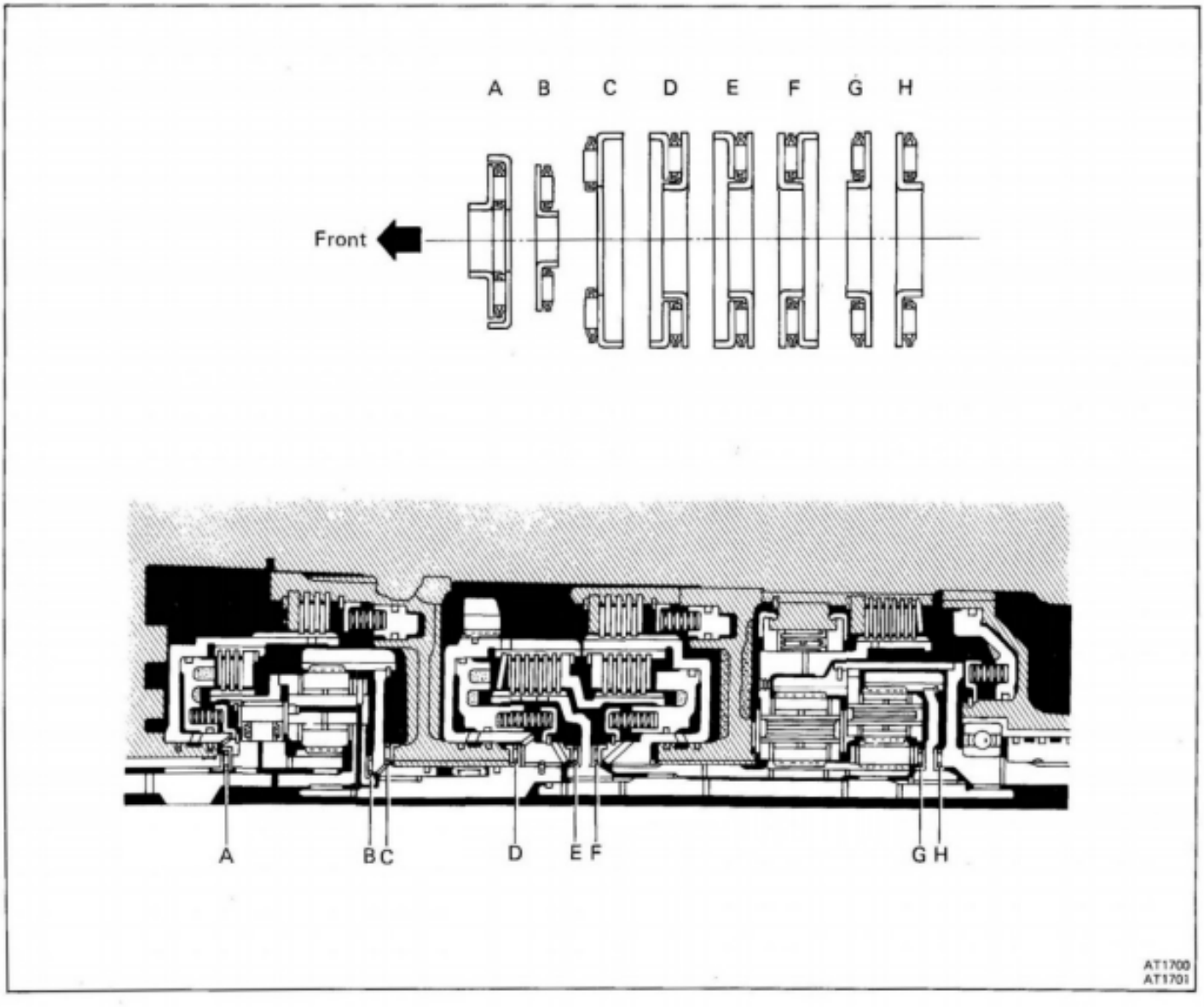

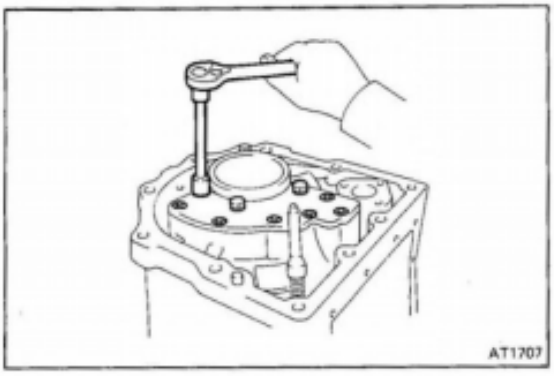

1. **INSTALL TRANSMISSION REAR COVER**

(a) Place a new gasket on the transmission case.

(b) Install the transmission rear cover and torque the four bolts and six screws.

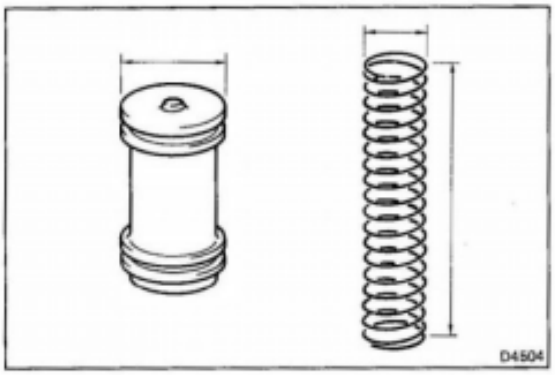

2. **INSTALL C_1 ACCUMULATOR PISTON AND SPRING**

(a) Coat the O-rings with ATF and install it to the piston.

mm (in.)

Piston diameter	Spring diameter	Spring free length
29.87 (1.1760)	17.92 (0.7055)	92.34 (3.6354)

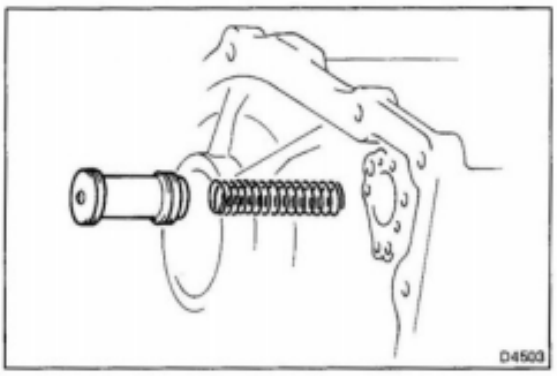

(b) Install the spring and piston for C_1.

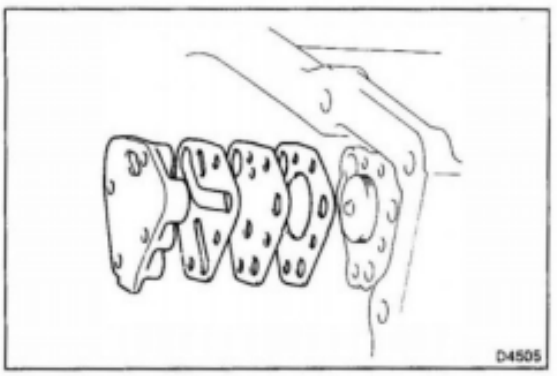

(c) Place two new gaskets on the transmission case and plate as shown.

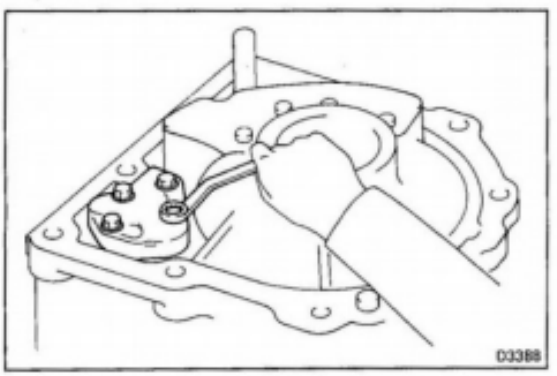

(d) Install the front clutch accumulator cover and torque the four bolts.

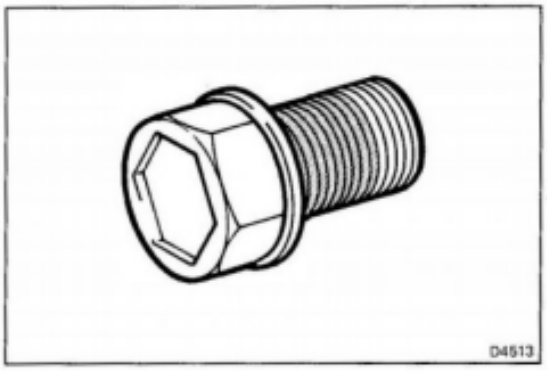
D4513

3. INSTALL POWER TAKE-OFF COVER

(a) Clean the threads of the bolts and case with white gasoline.

(b) Coat the threads of the bolts with sealer.

Sealer part LOCTITE 242

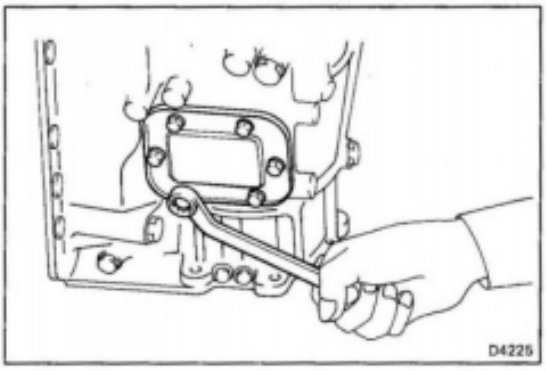
D4225

(c) Install the power take-off cover with a new gasket and torque the bolts.

Torque: 155 kg-cm (11 ft-lb, 15 N·m)

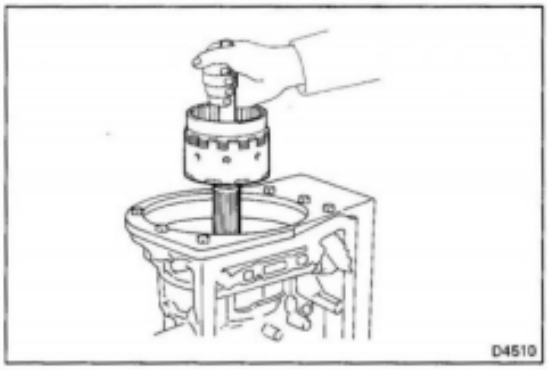
D4510

4. INSTALL PLANETARY GEAR AND OUTPUT SHAFT

(a) Install the planetary gear and output shaft to the transmission case.

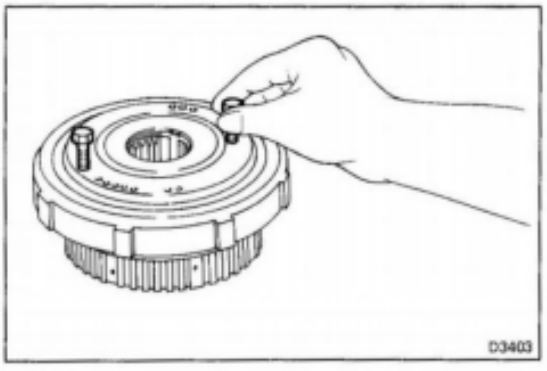
D3403

(b) Temporarily install the two bolts to the one-way clutch drum.

NOTE: Use two 6-mm (1 mm pitch) bolts. Do not tighten over 5 revolutions (5 mm).

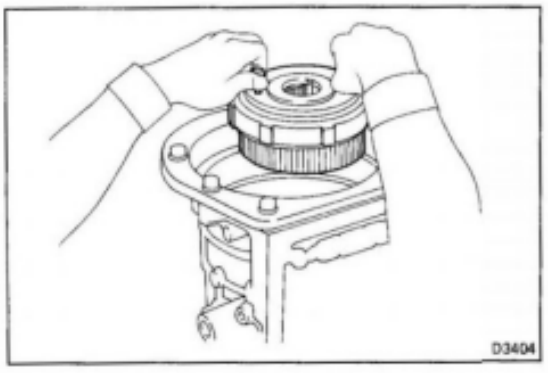
D3404

(c) Hold the drum by the bolts, and rotating it clockwise, install to the transmission case.

NOTE: If the one-way clutch drum will not rotate counterclockwise, check the installation of the one-way clutch.

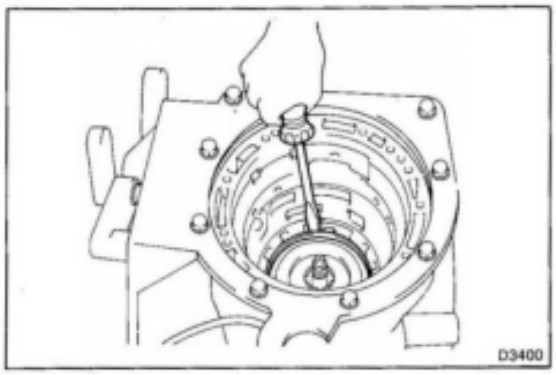

(d) Using a screwdriver, install the snap ring.

NOTE: Be sure the end gap of the snap ring is not aligned with one of the cutouts.

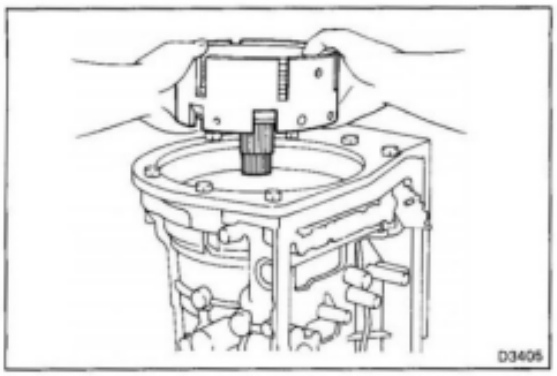

5. INSTALL CENTER SUPPORT

(a) Align the oil hole and bolt hole of the center support with those of the body side and insert the center support.

(b) Install and torque the three lock bolts.

NOTE: Since the bolts are temporarily installed, do not coat with sealer.

Torque: 250 kg-cm (18 ft-lb, 25 N·m)

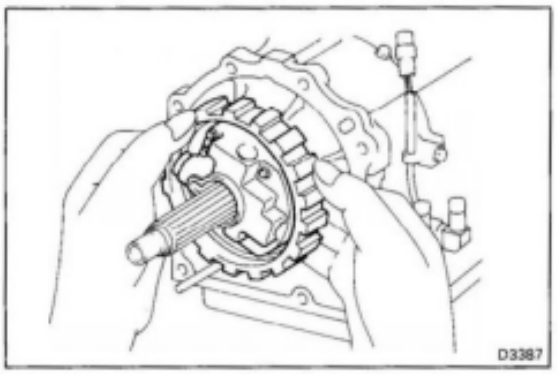

6. INSTALL GOVERNOR BODY

Install the governor body onto the output shaft.

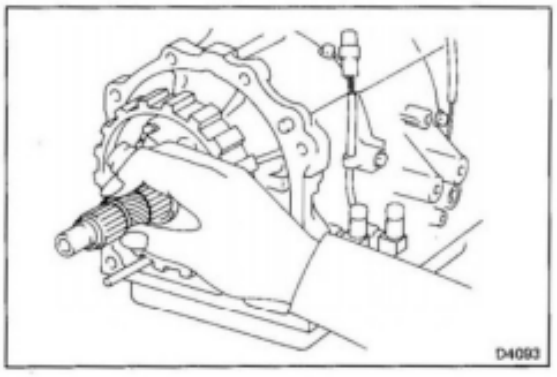

7. INSTALL SPEEDOMETER DRIVE GEAR

Install the spacer and speedometer drive gear.

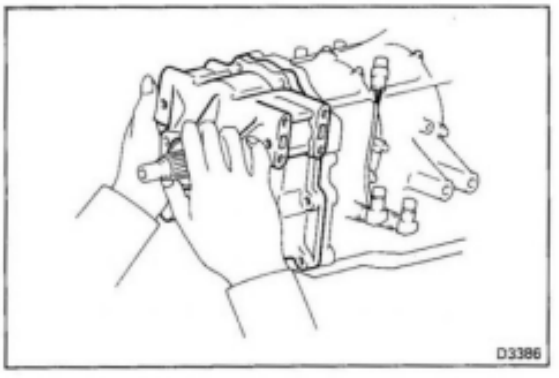

8. INSTALL EXTENSION HOUSING

(a) Install the extension housing with a new gasket.

(b) Install and torque the ten bolts.

Torque: 380 kg-cm (27 ft-lb, 37 N·m)

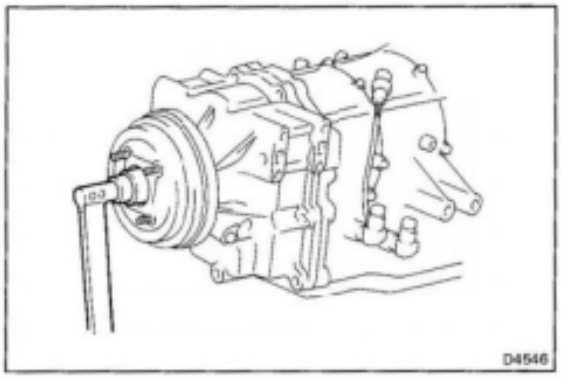

9. INSTALL PARKING BRAKE DRUM

Temporarily install the parking brake drum and torque the nut.

Torque: 1,300 kg-cm (94 ft-lb, 127 N·m)

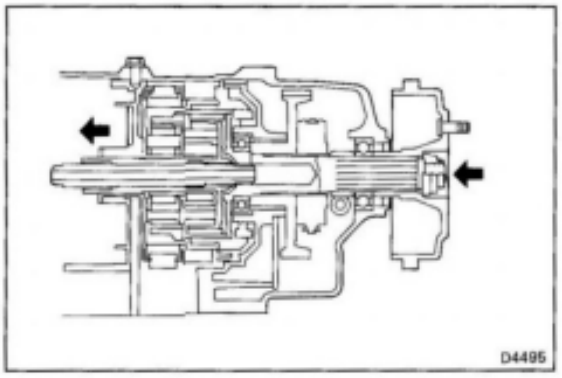

10. ADJUST CENTER SUPPORT THRUST CLEARANCE

(a) Face the transmission output shaft toward the front of the transmission, and push in using 5–10 kg (11.0–22.0 lb, 49–98 N) of pressure.

(b) Pull the center support toward the front of the transmission applying 5–10 kg (11.0–22.0 lb, 49–98 N) of pressure.

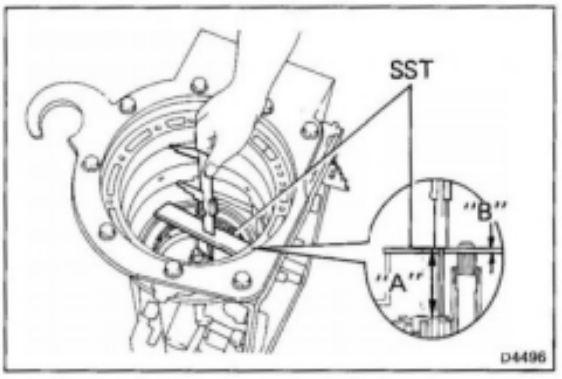

(c) Set SST on the center support as shown in the figure. Using calipers, measure the distance "A" between the top of SST and the clutch drum.

SST 09350-36010 (09350-06090)

(d) Using calipers, measure the SST thickness "B."

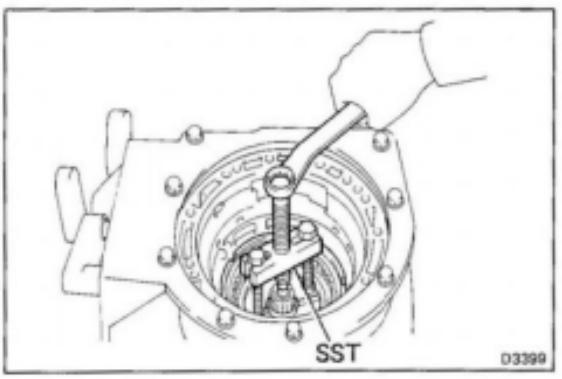

(e) Remove the three center support bolts.

(f) Using SST, remove the center support.

SST 09350-36010 (09350-06140)

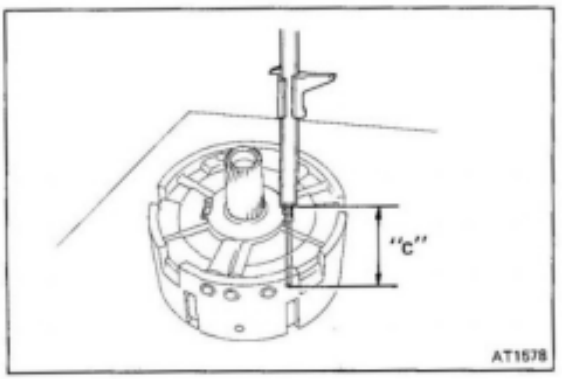

(g) Turn over the center support and plate it on a flat surface. Inserting calipers into the thrust washer hole and, measure the distance "C" between it and the surface.

Center support thrust clearance = A – (B + C)

Standard clearance: 0.3 – 0.7 mm (0.012 – 0.028 in.)

Maximum clearance: 0.7 mm (0.028 in.)

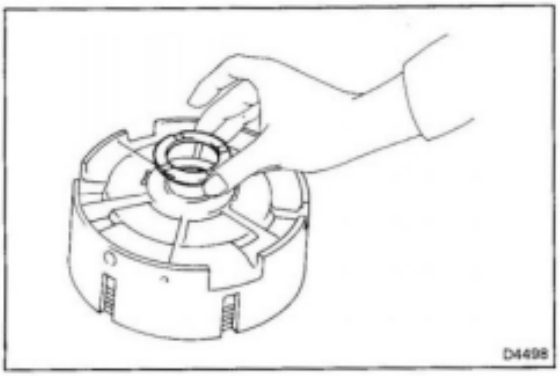

(h) Select a washer to bring the space between the center support and one-way clutch within standard.

Thrust washer thickness	mm (in.)
1.8	(0.071)
2.1	(0.083)
2.4	(0.094)
2.6	(0.102)

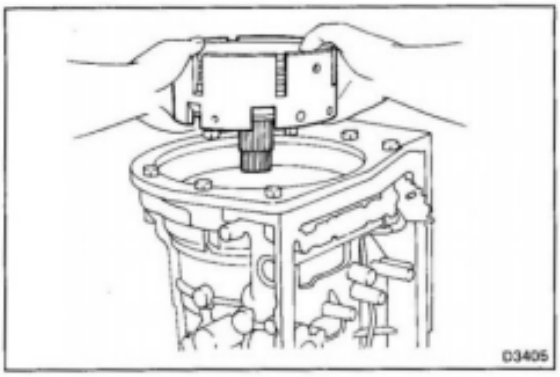

(i) Coat three new O-rings with ATF and install them to the center support.

(j) Align the oil hole and bolt hole of the center support with those of the body side, and insert the center support.

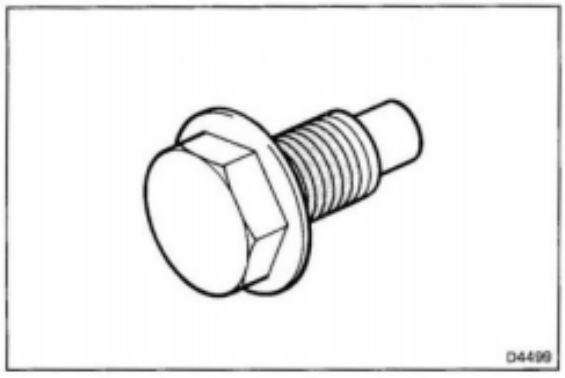

(k) Clean the threads of the bolts and case with white gasoline.

(l) Coat the threads of the bolts with sealer.

Sealer part LOCTITE 242

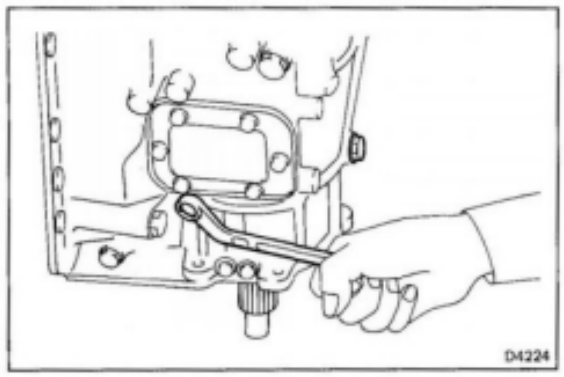

(m) Install and torque the center support lock bolts.

Torque: 250 kg-cm (18 ft-lb, 25 N·m)

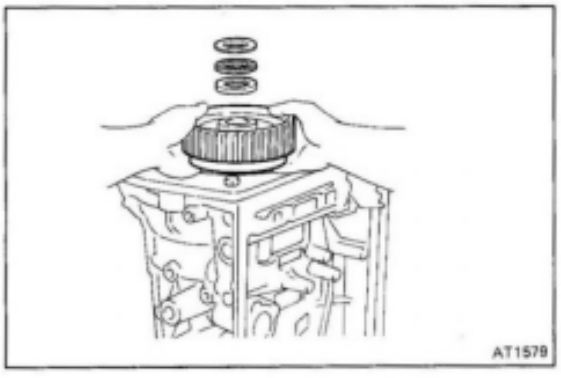

11. INSTALL REAR CLUTCH ASSEMBLY IN CASE

(a) Align flukes of the clutch disc and mesh them with the rear clutch. Push the rear clutch assembly into the case.

(b) Install the thrust bearing and two races on rear clutch.

mm (in.)

	Outer diameter	Inner diameter
Upper race	50.4 (1.984)	32.8 (1.291)
Lower race	52.0 (2.047)	37.0 (1.457)
Thrust bearing	52.0 (2.047)	34.7 (1.366)

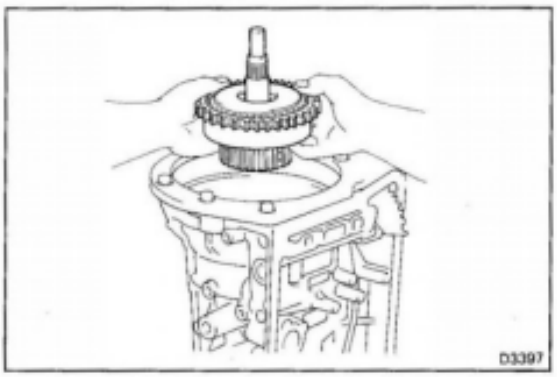

12. INSTALL FRONT CLUTCH ASSEMBLY

Align flukes of the rear clutch disc and mesh them with the front clutch hub. Push the front clutch assembly into the case.

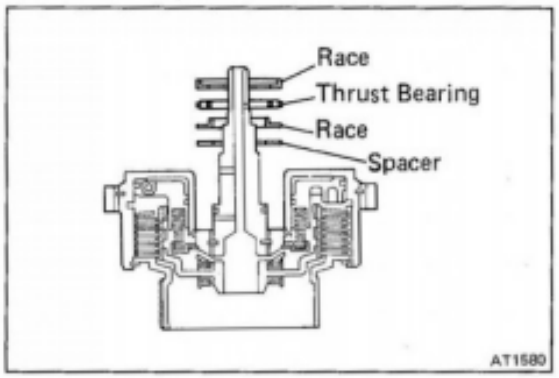

13. INSTALL THRUST BEARING AND RACES

mm (in.)

	Outer diameter	Inner diameter
Upper race	52.0 (2.047)	37.0 (1.457)
Lower race	50.4 (1.984)	32.8 (1.291)
Thrust bearing	52.0 (2.047)	34.7 (1.366)

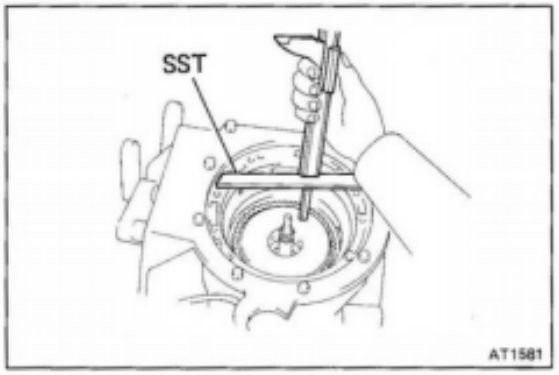

14. CHECK CORRECT INSTALLATION OF FRONT CLUTCH

Set SST on the transmission case as shown in the figure. Measure the distance between the top surface of SST and front clutch assembly. If the distance corresponds to that during disassembly, the front clutch is installed correctly.

SST 09350-36010 (09350-06090)

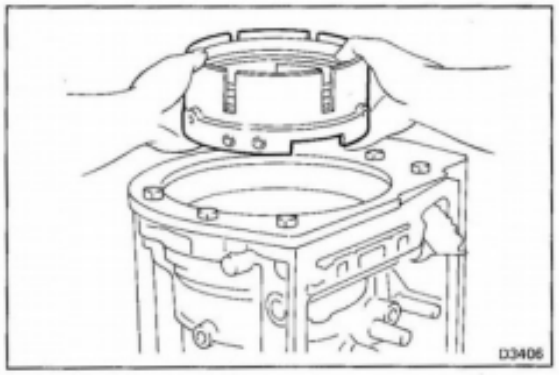

15. INSTALL OVERDRIVE SUPPORT

(a) Align the oil hole and bolt hole of the overdrive support with those of the body side, and install the overdrive support.

(b) Install and torque the three lock bolts.

NOTE: Since the bolts are temporarily installed, do not coat sealer.

Torque: 250 kg-cm (18 ft-lb, 25 N·m)

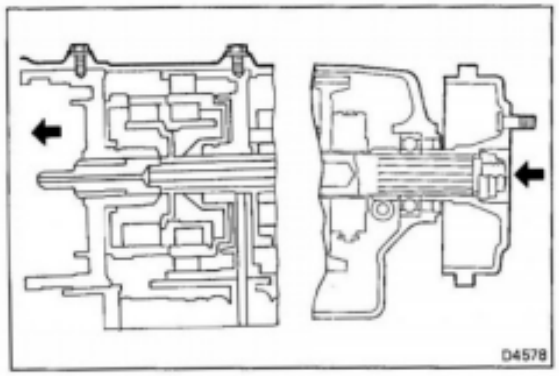

(c) Face the transmission output shaft toward the front of the transmission, and push in using 5–10 kg (11.0 –22.0 lb, 49–98 N) of pressure.

(d) Pull the overdrive support toward the front of the transmission applying 5–10 kg (11.0–22.0 lb, 49–98 N) of pressure.

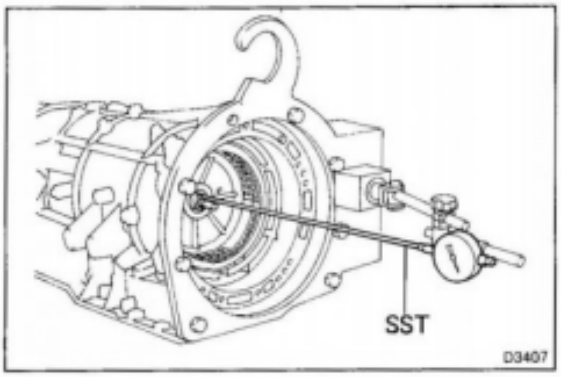

(e) Set the dial indicator installed by the SST to the input shaft face, and measure the input shaft thrust clearance.

SST 09350-36010 (09350-06130)

(f) Check that the thrust clearance of the input shaft is standard. If it exceeds the maximum clearance, select a new spacer.

Standard clearance : 0.3 – 0.7 mm (0.012 – 0.028 in.)
Maximum clearance: 0.7 mm (0.028 in.)

Spacer thickness mm (in.)
0.9 (0.035)
1.2 (0.047)
1.5 (0.059)
1.8 (0.071)
2.1 (0.083)

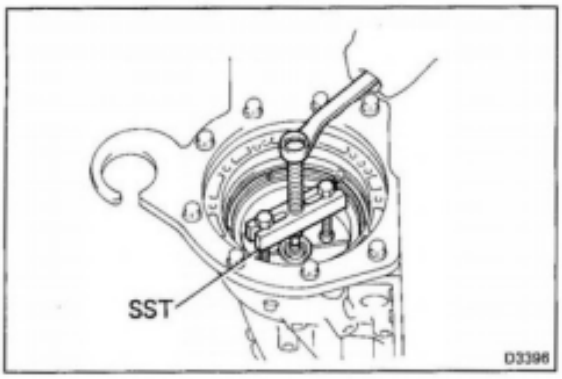

(g) Remove the three overdrive support lock bolts.

(h) Using SST, remove the overdrive support.

SST 09350-36010 (09350-06140)

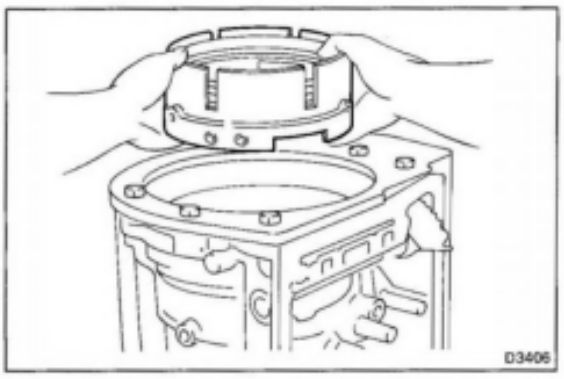

(i) Coat three new O-rings with ATF and install them to the overdrive support.

(j) Align the oil hole and bolt hole of the overdrive support with those of the body side and insert the overdrive support.

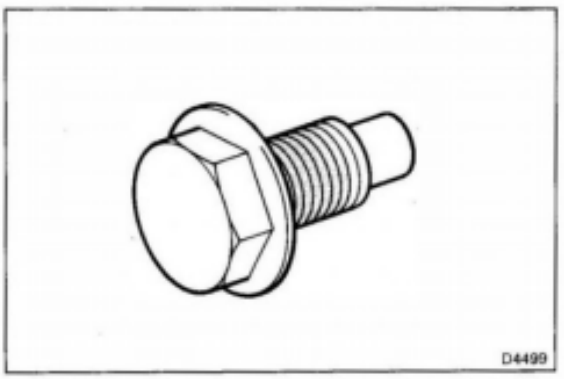

(k) Clean the threads of the bolts and case with white gasoline.

(l) Coat the threads of the bolts with sealer.

Sealer: LOCTITE 242

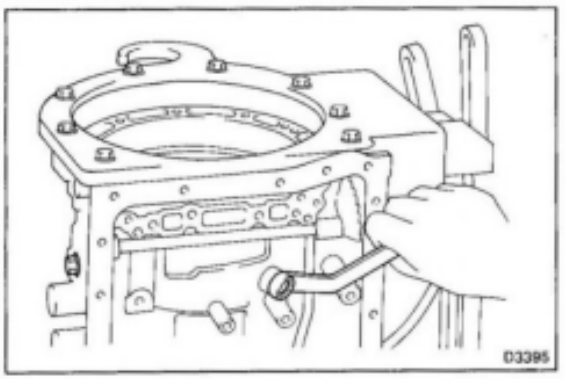

(m) Install and torque the overdrive support lock bolts.

Torque: 250 kg-cm (18 ft-lb, 25 N·m)

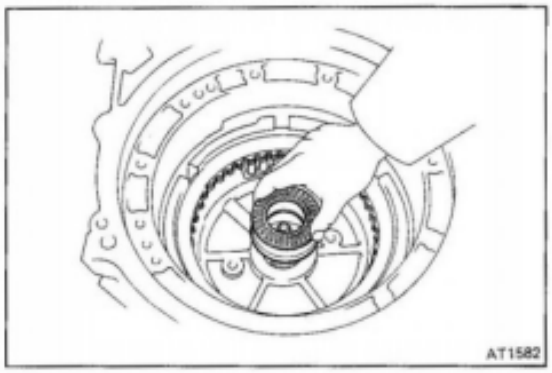

(n) Install the race on the overdrive support.

mm (in.)

	Outer diameter	Inner diameter
Race	52.0 (2.047)	37.0 (1.457)

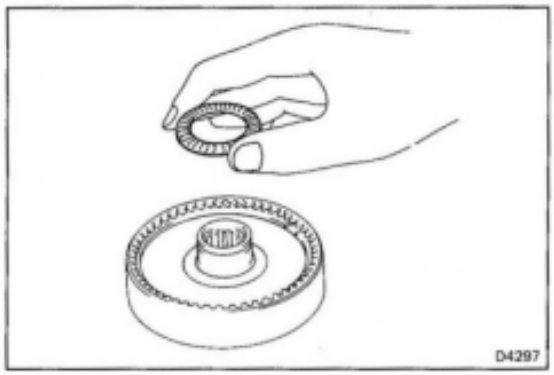

(o) Coat the bearing with petroleum jelly, and install it onto the overdrive planetary gear.

mm (in.)

	Outer diameter	Inner diameter
Bearing	52.0 (2.047)	34.7 (1.366)

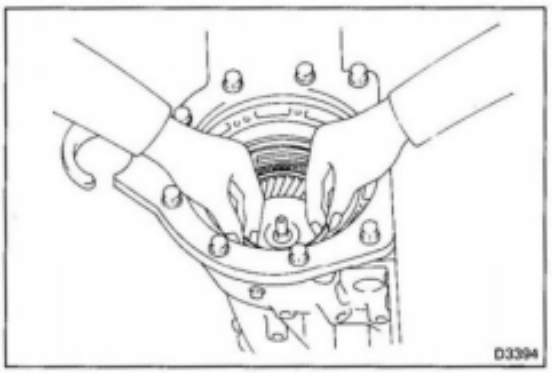

(p) Install the overdrive ring gear to the overdrive support.

16. INSTALL OVERDRIVE DIRECT CLUTCH ASSEMBLY

(a) Coat the race and bearing with petroleum jelly, and install them onto the overdrive planetary gear.

mm (in.)

	Outer diameter	Inner diameter
Bearing	42.0 (1.654)	25.0 (0.984)
Race	42.0 (1.654)	23.2 (0.913)

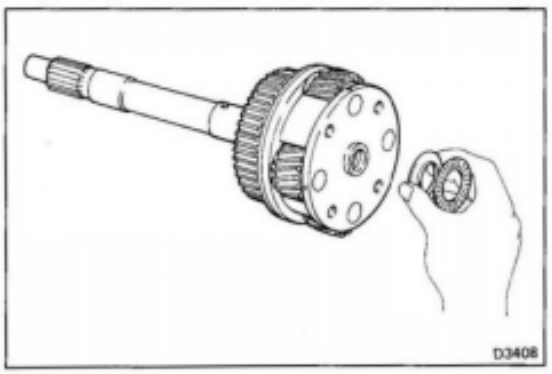

(b) Install the race and bearing onto the overdrive clutch assembly.

mm (in.)

	Outer diameter	Inner diameter
Race	48.0 (1.890)	28.5 (1.122)
Bearing	46.2 (1.819)	28.5 (1.122)

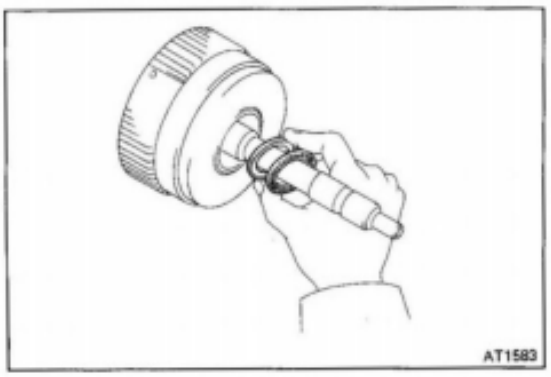

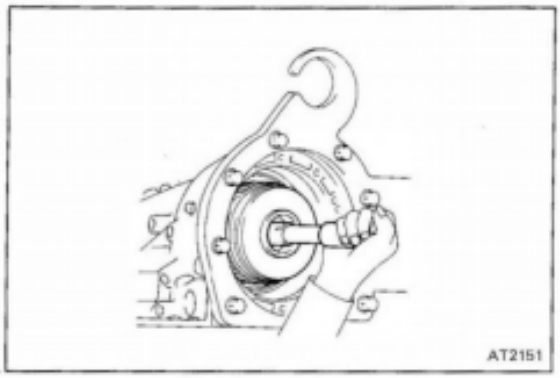

(c) Install the assembled overdrive planetary gear and overdrive clutch assembly to the overdrive support.

NOTE: Place the transmission case flat and install the overdrive planetary gear taking care that its bearing and race do not fall off.

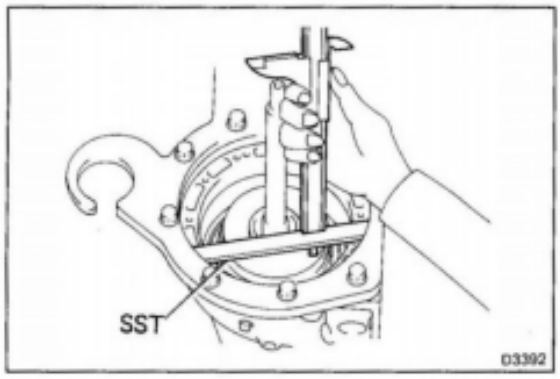

17. CHECK CORRECT INSTALLATION OF OVERDRIVE CLUTCH

Set SST on the transmission case as shown in the figure. Measure the distance between the top surface of the SST and front clutch assembly. If the distance corresponds to that during disassembly, the overdrive clutch is installed correctly.

SST 09350-36010 (09350-06090)

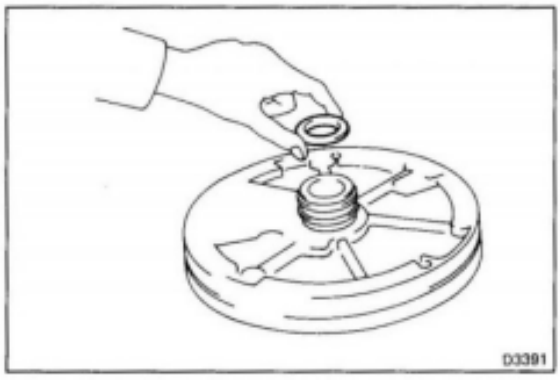

18. INSTALL OIL PUMP ASSEMBLY

(a) Install the race onto the oil pump assembly.

mm (in.)

	Outer diameter	Inner diameter
Race	43.0 (1.693)	27.1 – 28.3 (1.067 – 1.114)

(b) Place the gasket onto the transmission case.

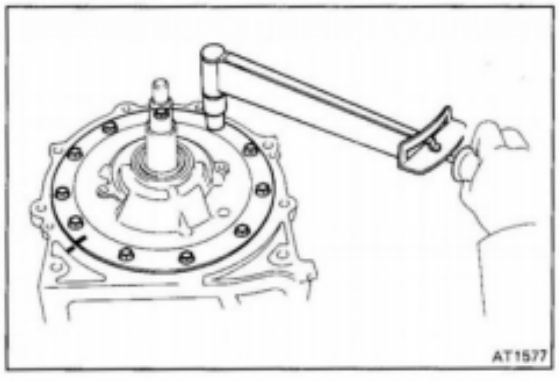

(c) Align the matchmarks on the transmission case and oil pump assembly.

(d) Using a plastic hammer, tap the oil pump body and install the oil pump assembly to the transmission case.

(e) Tighten the set bolts gradually and evenly.

Torque: 210 kg-cm (15 ft-lb, 21 N·m)

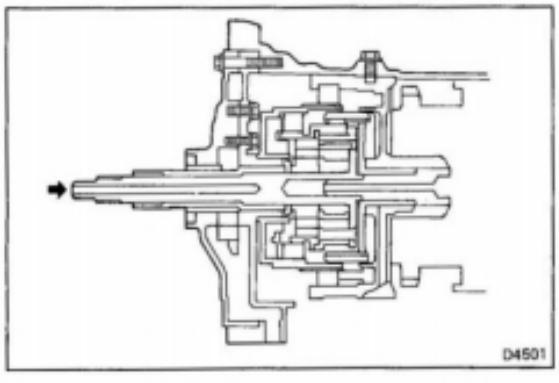

19. INSPECT INPUT SHAFT THRUST CLEARANCE

(a) Face the overdrive input shaft toward the rear of the transmission, and press in using 5–10 kg (11.0–22.0 lb, 49–98 N) of pressure.

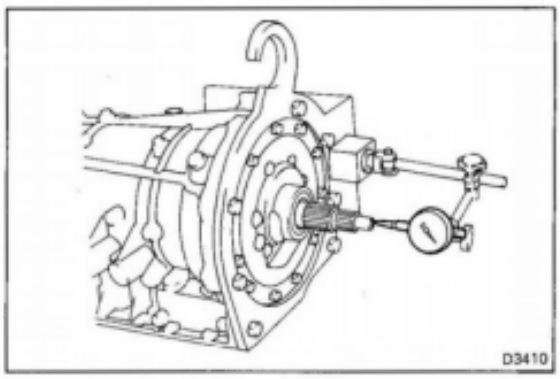

(b) Set the dial indicator into the input shaft.

(c) Check that the thrust clearance of the input shaft is standard. If it exceeds the maximum, select a new race.

Standard clearance: **0.4 – 0.9 mm (0.016 – 0.035 in.)**

Maximum clearance: **0.9 mm (0.035 in.)**

Race thickness mm (in.)
0.8 (0.031)
1.0 (0.039)
1.4 (0.055)

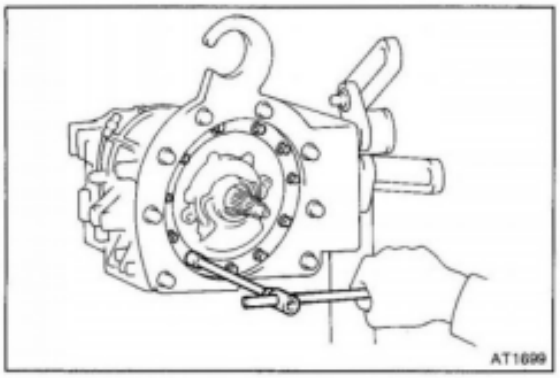

(d) Remove the oil pump set bolts.

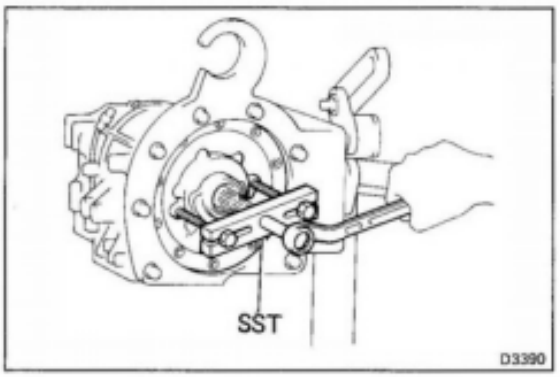

(e) Using SST, remove the oil pump assembly.

SST 09350-36010 (09350-06140)

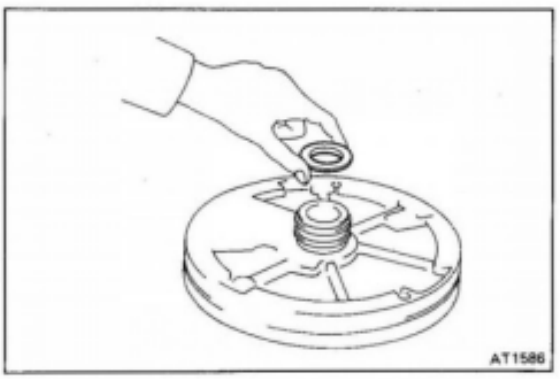

(f) Coat a new O-ring with ATF and install it to the oil pump assembly.

(g) Assemble bearing of step 19-(b) to the oil pump.

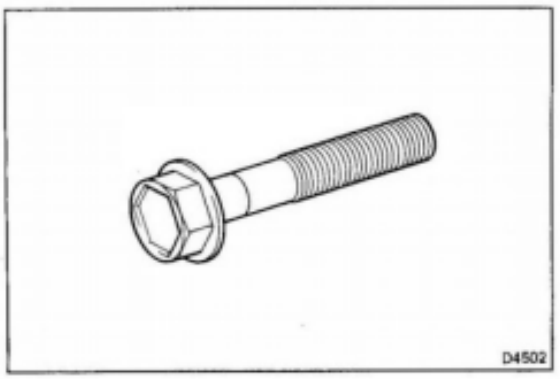

(h) Clean the threads of the bolts and case with white gasoline.

(i) Coat the threads of the bolts with sealer.

Sealer: LOCKTITE 242

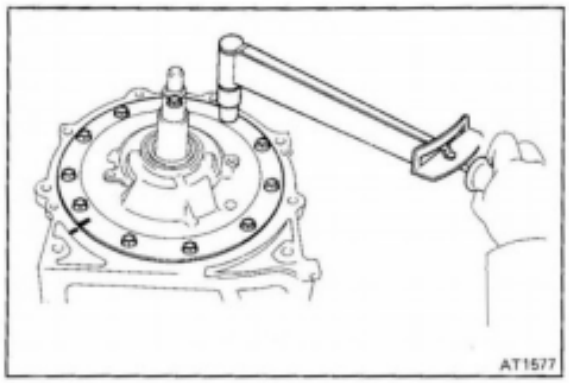

(j) Place a new gasket onto the transmission case.

(k) Align the matchmarks on the transmission case and oil pump body.

(l) Using a plastic hammer, tap the oil pump body and install the oil pump assembly to the transmission case.

(m) Tighten the set bolts gradually and evenly.

Torque: 210 kg-cm (15 ft-lb, 21 N·m)

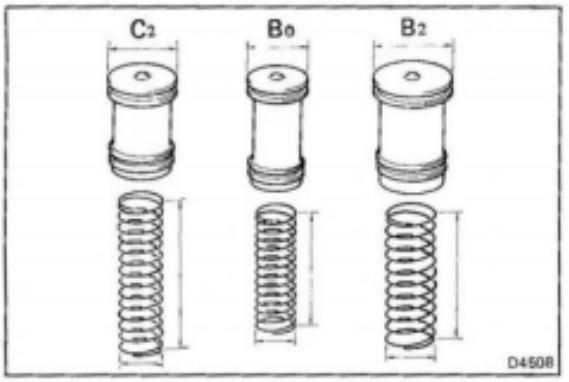

20. INSTALL C_2, B_0, B_2 ACCUMULATOR PISTONS AND SPRINGS

(a) Coat the O-rings with ATF and install it to the piston.

(b) Install the three springs and accumulator pistons to the transmission case.

Accumulator piston mm (in.)

Piston	Outer diameter
C_2	35.87 (1.4122)
B_0	29.87 (1.1760)
B_2	39.87 (1.5697)

Spring mm (in.)

Spring	Color	Free length	Outer diameter
C_2	white	80.00 (3.1496)	21.80 (0.8583)
B_0	none	63.06 (2.4827)	20.70 (0.8150)
B_2	yellow	65.00 (2.5591)	25.10 (0.9882)

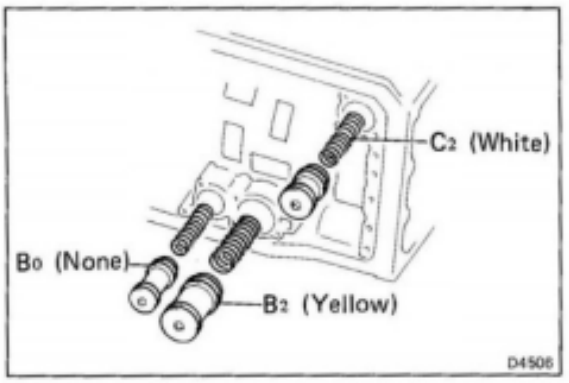

21. INSTALL THROTTLE CABLE

(a) Coat the O-ring with ATF and install it to the throttle cable.

(b) Push the cable through the transmission case, being careful not to damage the O-ring. Check for full seating.

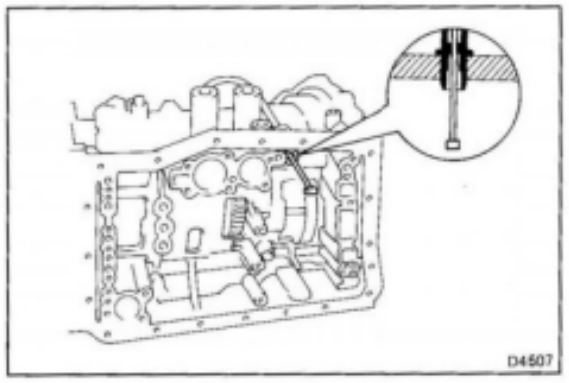

22. INSTALL FOUR TRANSMISSION APPLICATION GASKETS

Install the four transmission application gaskets facing the pitted side toward the transmission case.

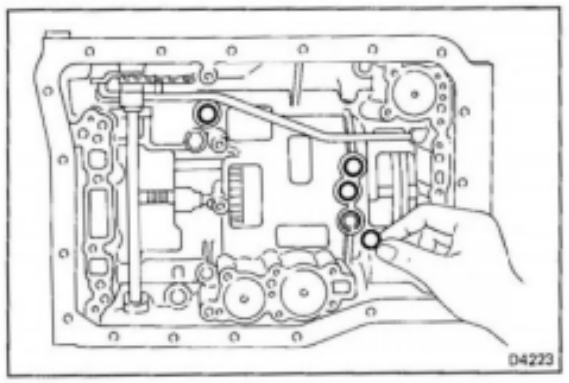

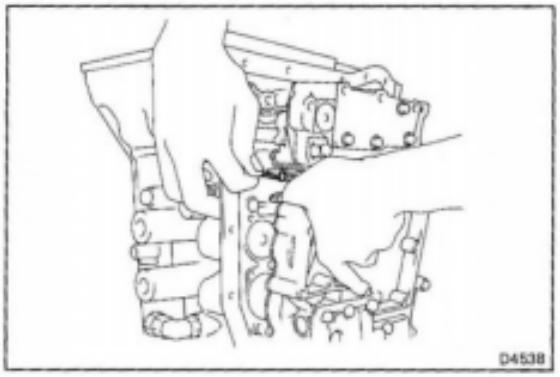

23. CONNECT THROTTLE CABLE TO CAM

Push the cable fitting into the cam.

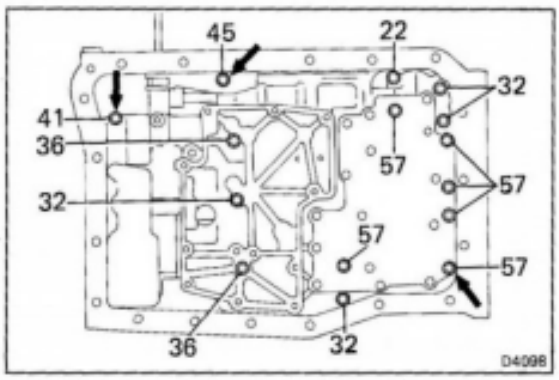

24. INSTALL VALVE BODY

(a) Install the three bolts indicated by the arrows.

(b) Install the other bolts.

(c) Check that the manual valve lever contacts the center of the roller at the tip of the detent spring.

(d) Tighten the bolts.

Torque: 100 kg-cm (7 ft-lb, 10 N·m)

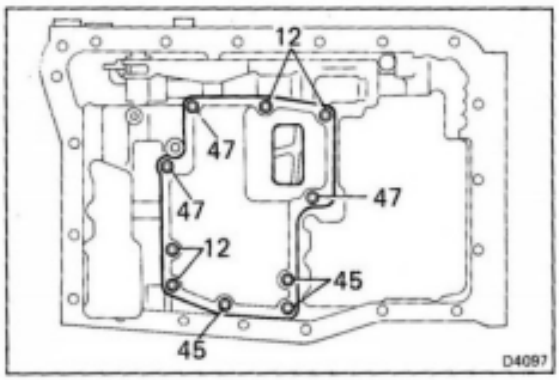

25. INSTALL OIL STRAINER AND BOLTS

(a) Place the gasket on the valve body.

(b) Install the bolts as shown.

Torque: 5 mm 55 kg-cm (48 in.-lb, 5.4 N·m)
6 mm 100 kg-cm (7 ft-lb, 10 N·m)

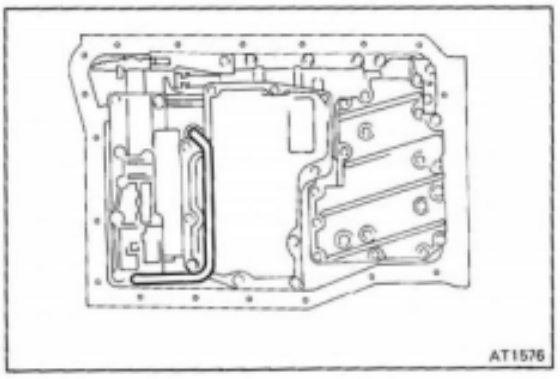

26. INSTALL OIL TUBE

(a) Remove the lock up relay valve body plate.

NOTE: Do not drop the lock up relay valve pins.

(b) Tap the tube with a plastic hammer to install it into the position indicated in the figure.

CAUTION: Be careful not to bend or damage the tube.

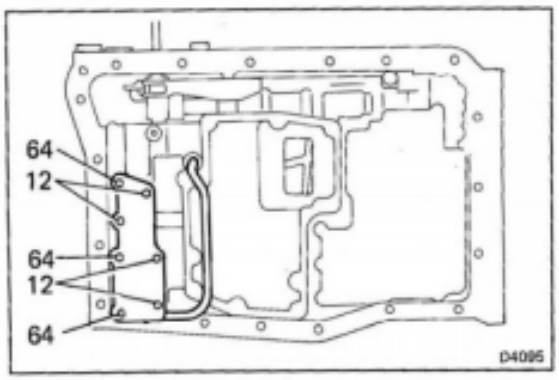

(c) Place a new gasket on the valve body.

(d) Install the lock up relay valve body plate and install the bolts.

NOTE: Each bolt length (mm) is indicated in the figure.

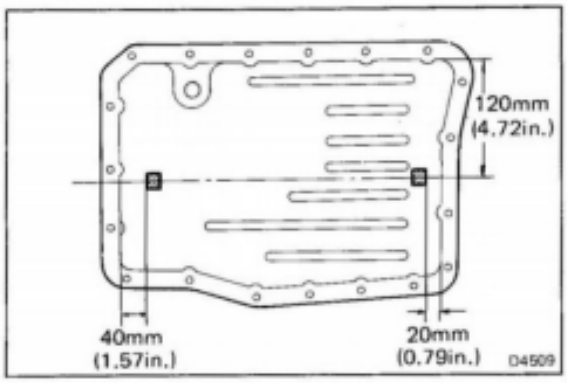

27. INSTALL TWO MAGNETS IN PAN

Install two magnets as shown in the figure.

CAUTION: Make sure that the two magnets do not interfere with the oil tube.

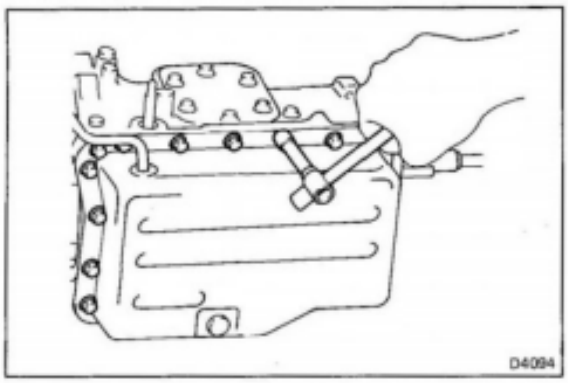

28. INSTALL PAN WITH NEW GASKET

(a) Place a new gasket on the transmission case.

(b) Tighten the twenty bolts evenly.

Torque: 70 kg-cm (61 in.-lb, 6.9 N·m)

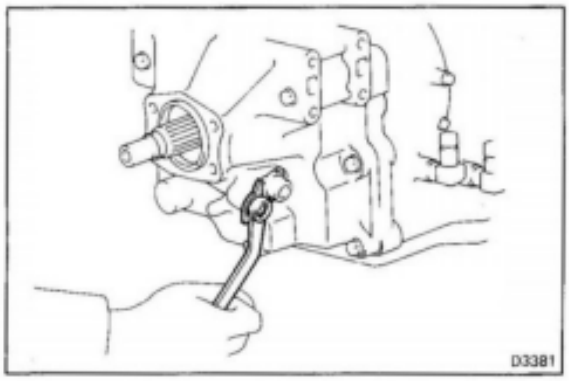

29. INSTALL SPEEDOMETER DRIVEN GEAR

(a) Coat a new O-ring with ATF and install it to the speedometer driven gear.

(b) Install the speedometer driven gear to the extension housing.

(c) Install the lock plate and torque the bolt.

Torque: 130 kg-cm (9 ft-lb, 13 N·m)

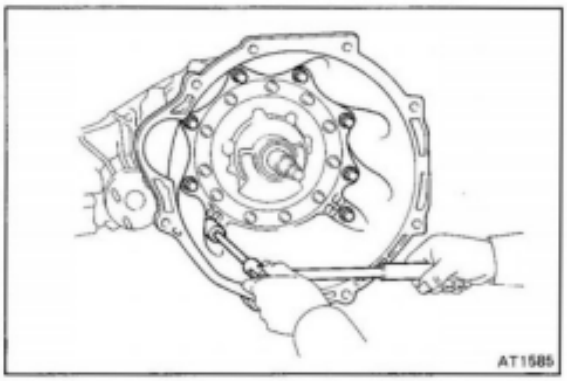

30. INSTALL TRANSMISSION HOUSING

Install the transmission housing to the transmission case and torque the bolts.

Torque: 650 kg-cm (47 ft-lb, 64 N·m)

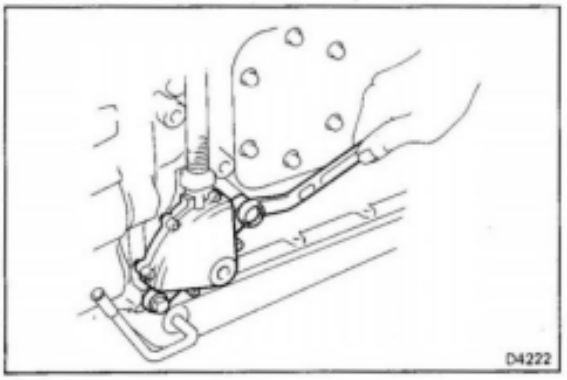

31. INSTALL NEUTRAL START SWITCH

(a) Install the neutral start switch and torque the bolts.

Torque: 130 kg-cm (9 ft-lb, 13 N·m)

(b) Install the grommet and lock washer, and torque the nut.

Torque: 70 kg-cm (61 in.-lb, 6.9 N·m)

(c) Using a screwdriver, stake the lock washer.

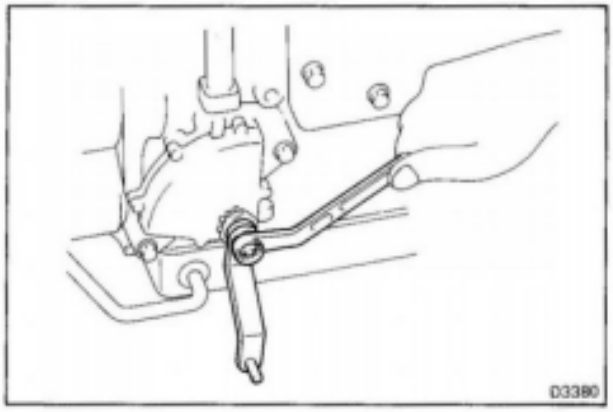

32. INSTALL CONTROL SHAFT LEVER

Install the control shaft lever with the nut.

Torque: 130 kg-cm (9 ft-lb, 13 N·m)

33. INSTALL TUBE AND OIL FILLER GAUGE

(a) Coat the O-ring with ATF and install it to the tube.

(b) Install the tube and oil filler gauge.

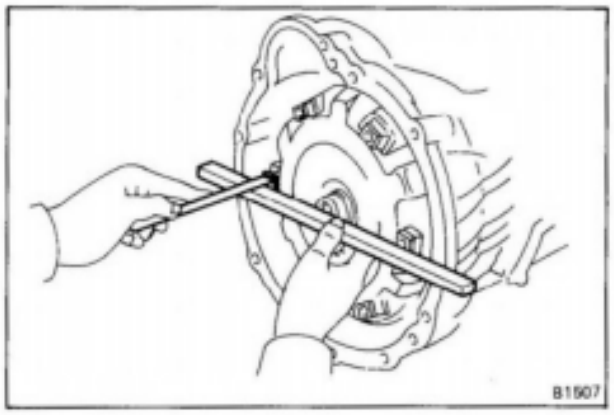

34. INSTALL TORQUE CONVERTER

35. CHECK TORQUE CONVERTER INSTALLATION

Using calipers and a straight edge, measure from the installed surface to the front surface of the transmission housing.

Correct distance: 25.4 mm (1.000 in.) or more

AUTOMATIC TRANSMISSION

Specifications

Oil pump	Body clearance	STD	0.07 – 0.15 mm	0.0028 – 0.0059 in.
		Limit	0.3 mm	0.012 in.
	Tip clearance	STD	0.14 – 0.24 mm	0.0055 – 0.0094 in.
		Limit	0.3 mm	0.012 in.
	Side clearance	STD	0.02 – 0.05 mm	0.0008 – 0.0020 in.
			0.1 mm	0.004 in.
Bushing bore	Oil pump body	Limit	42.13 mm	1.6587 in.
	Oil pump cover (FR)	Limit	24.07 mm	0.9476 in.
	(RR)	Limit	26.57 mm	1.0461 in.
	OD direct clutch drum	Limit	26.57 mm	1.0461 in.
	OD planetary gear	Limit	12.07 mm	0.4752 in.
	Center support drum	Limit	35.08 mm	1.3811 in.
	Planetary sun gear (FR)	Limit	24.07 mm	0.9476 in.
	(RR)	Limit	24.07 mm	0.9476 in.
	Output shaft	Limit	17.07 mm	0.6720 in.
Piston return spring length	OD direct clutch (C_0)	STD	21.0 mm	0.827 in.
	OD brake (B_0)	STD	22.75 mm	0.8957 in.
	Front clutch (C_1)	STD	30.5 mm	1.201 in.
	Rear clutch (C_2)	STD	31.24 mm	1.2299 in.
	Second brake (B_2)	STD	22.75 mm	0.8957 in.
	First and reverse brake (B_3)	STD	23.9 mm	0.941 in.
Disc thickness	OD direct clutch (C_0)	Limit	1.9 mm	0.075 in.
	Front clutch (C_1)	Limit	1.9 mm	0.075 in.
	Rear clutch (C_2)	Limit	1.9 mm	0.075 in.
	First and reverse brake (B_3)	Limit	1.5 mm	0.059 in.
	OD brake (B_0)	Limit	1.9 mm	0.075 in.
	Second brake (B_2)	Limit	1.9 mm	0.075 in.
Flange thickness	Front clutch (C_1)		1.8 mm	0.071 in.
			2.0 mm	0.079 in.
			2.2 mm	0.087 in.
			2.4 mm	0.094 in.
	Rear clutch (C_2)	None	5.0 mm	0.197 in.
		No. 1	5.2 mm	0.205 in.
		No. 2	5.4 mm	0.213 in.
		No. 3	5.6 mm	0.220 in.
	Second brake (B_2)	None	5.0 mm	0.197 in.
		No. 1	5.2 mm	0.205 in.
		No. 2	5.4 mm	0.213 in.
		No. 3	5.6 mm	0.220 in.
	First and reverse brake (B_3)	None	6.65 mm	0.2618 in.
		No. 1	7.05 mm	0.2776 in.
		No. 2	7.45 mm	0.2933 in.

Specifications (Cont'd)

Clutch piston stroke		Disc No.		
	OD direct clutch (C_0)	3	1.10 – 1.70 mm	0.0433 – 0.0669 in.
	Front clutch (C_1)	6	3.93 – 4.23 mm	0.1547 – 0.1665 in.
	Rear clutch (C_2)	5	1.70 – 1.90 mm	0.0669 – 0.0748 in.
Brake piston stroke		Disc No.		
	OD brake (B_0)	3	1.25 – 1.85 mm	0.0492 – 0.0728 in.
	Second brake (B_2)	4	1.60 – 1.80 mm	0.0630 – 0.0709 in.
	First and reverse brake (B_3)	6	3.30 – 3.80 mm	0.1299 – 0.1496 in.

Valve body spring mm (in.)		Free length	Coil outer diameter	No. coils	Wire diameter
	Front upper valve body				
	Secondary regulator valve	46.00 (1.8110)	13.30 (0.5236)	15	1.7 (0.067)
	Primary throttle valve	25.30 (0.9961)	9.20 (0.3622)	9.5	0.7 (0.028)
	Primary down shift plug	26.85 (1.0571)	8.97 (0.3531)	10.5	1.1 (0.043)
	Secondary throttle valve	25.30 (0.9961)	9.20 (0.3622)	9.5	0.7 (0.028)
	Secondary down shift plug				
	(HJ)	32.78 (1.2905)	9.79 (0.3854)	13.5	1.0 (0.039)
	(FJ)	32.57 (1.2823)	9.74 (0.3835)	13	1.0 (0.039)
	Sleeve	10.80 (0.4252)	18.20 (0.7165)	4	1.5 (0.059)
	Rear upper valve body				
	2-3 shift valve	44.65 (1.7579)	8.90 (0.3504)	22	1.1 (0.043)
	2-3 shift timing valve	29.40 (1.1575)	8.60 (0.3386)	15.5	0.9 (0.035)
	3-4 shift valve (HJ)	39.40 (1.5512)	9.70 (0.3819)	17	1.0 (0.039)
	(FJ)	38.32 (1.5087)	9.70 (0.3819)	17	1.0 (0.039)
	Detent regulator valve (HJ)	29.30 (1.1535)	7.40 (0.2913)	16	0.9 (0.035)
	(FJ)	30.40 (1.1968)	7.40 (0.2913)	16	0.9 (0.035)
	Lock-up signal valve				
	*: Speedometer drive and driven gear ratio *18/6 (HJ)	53.41 (2.1028)	13.70 (0.5394)	16	1.2 (0.047)
	18/6 (FJ)	52.83 (2.0799)	13.50 (0.5315)	17	1.1 (0.043)
	17/6, 16/6	50.15 (1.9744)	13.70 (0.5394)	16	1.2 (0.047)
	OD clutch exhaust valve	33.30 (1.3110)	8.20 (0.3228)	14	0.7 (0.028)
	Intermediate modulator valve	22.50 (0.8858)	7.70 (0.3031)	12	1.0 (0.039)
	Lower valve body				
	Lock-up relay valve	32.40 (1.2756)	9.30 (0.3661)	15	1.1 (0.043)
	Primary regulator valve	58.20 (2.2913)	20.90 (0.8228)	11	1.9 (0.075)
	1-2 shift valve	26.58 (1.0465)	6.90 (0.2717)	16	0.7 (0.028)
	Second lock valve	29.40 (1.1575)	8.30 (0.3268)	14	0.8 (0.031)
	3-2 KD orifice control valve	32.45 (1.2776)	8.33 (0.3280)	14	0.8 (0.031)
	Accumulator control valve	25.11 (0.9886)	12.50 (0.4921)	8.5	1.2 (0.047)
	Low modulator valve	31.80 (1.2520)	7.30 (0.2874)	16	0.8 (0.031)
Accumulator spring mm (in.)	C_1	92.34 (3.6354)	17.92 (0.7055)	20	2.7 (0.106)
	C_2	80.00 (3.1496)	21.80 (0.8583)	16	3.5 (0.138)
	B_0 (HJ)	63.06 (2.4827)	20.70 (0.8150)	13	3.2 (0.126)
	(FJ)	64.09 (2.5232)	21.05 (0.8287)	13	3.3 (0.130)
	B_2	65.00 (2.5591)	25.10 (0.9882)	8.5	4.0 (0.157)

Specifications (Cont'd)

Parking lock pawl bracket installation height (between the transfer adapter surface and the top of the bracket tabs)	47.5 – 47.6 mm	1.870 – 1.874 in.
Clearance between the transfer adapter and front case	0.4 – 0.5 mm	0.016 – 0.020 in.
Rear output shaft bearings preload — New bearing	15 – 24.7 kg-cm	(13.0 – 21.4 in.-lb, 1.5 – 2.4 N·m)
Rear output shaft bearings preload — Reused bearing	7 – 12 kg-cm	(6.1 – 10.4 in.-lb, 0.7 – 1.2 N·m)
Center support thrust clearance	0.3 – 0.7 mm	0.012 – 0.028 in.
Input shaft thrust clearance	0.3 – 0.7 mm	0.012 – 0.028 in.
OD input shaft thrust clearance	0.4 – 0.9 mm	0.016 – 0.035 in.
Transfer front case adjusting shim thickness	2.3 mm	0.091 in.
	2.4 mm	0.094 in.
	2.5 mm	0.098 in.
Rear output shaft bearings preload adjusting shim thickness		
Mark		
0	0.15 mm	0.0059 in.
4	0.4 mm	0.016 in.
5	0.5 mm	0.020 in.
6	0.6 mm	0.024 in.
7	0.7 mm	0.028 in.
8	0.8 mm	0.031 in.
9	0.9 mm	0.035 in.
10	1.0 mm	0.039 in.
11	1.1 mm	0.043 in.
12	1.2 mm	0.047 in.
13	1.3 mm	0.051 in.
14	1.4 mm	0.055 in.
15	1.5 mm	0.059 in.
Center support thrust washer thickness	1.8 mm	0.071 in.
	2.1 mm	0.083 in.
	2.4 mm	0.094 in.
	2.6 mm	0.102 in.
Input shaft spacer thickness	0.9 mm	0.035 in.
	1.2 mm	0.047 in.
	1.5 mm	0.059 in.
	1.8 mm	0.071 in.
	2.1 mm	0.083 in.
Race (for OD input shaft thrust clearance adjustment)	0.8 mm	0.031 in.
	1.0 mm	0.039 in.
	1.4 mm	0.055 in.

Torgue Specifications

Part tightened		kg-cm	ft-lb	N·m
Transmission housing x Transmission case		650	47	64
Parking lock pawl bracket		195	14	19
Oil pump cover x Oil pump body	6 mm	90	78 in.-lb	8.8
	8 mm	210	15	21
Center support x Transmission case		250	18	25
Transfer adapter x Transmission case (A440F)		380	27	37
Transfer front case x Transfer adapter (A440F)		650	47	64
Transfer rear case x Transfer front case (A440F)				
	12 mm	650	47	64
	10 mm	400	29	39
Shift plug (A440F)		450	33	44
Rear output shaft rear bearing retainer (A440F)		350	25	34
Rear companion flange (A440F)		1,300	94	127
Output shaft lock nut (A440F)		1,300	94	127
Overdrive support x Transmission case		250	18	25
Oil pump x Transmission case		210	15	21
Valve body x Transmission case		100	7	10
Oil strainer x Valve body	5 mm	55	48 in.-lb	5.4
	6 mm	100	7	10
Oil pan		70	61 in.-lb	6.9
Transfer case cover (A440F)		155	11	15
PTO cover (A440F)		170	12	17
		185	13	18
Transfer L4 position switch (A440F)		400	29	39
Transfer neutral switch (A440F)		400	29	39
Neutral start switch (bolt)		130	9	13
Neutral start switch (nut)		70	61 in.-lb	6.9
Control shift lever		130	9	13
PTO cover (A440L)		155	11	15
Extension housing x Transmission case (A440L)		380	27	37
Parking brake drum (A440L)		1,300	94	127

AUTOMATIC TRANSMISSION

Specifications

Governor pressure (FJ)					
Differential gear ratio 3.727					
	Vehicle speed km/h (mph)				
Output shaft rpm	7.00 – 15				
1,000	35 (22)			0.8 – 1.2 kg/cm²	11 – 17 psi	78 – 118 kPa
1,800	64 (40)			2.0 – 2.4 kg/cm²	28 – 34 psi	196 – 235 kPa
3,500	125 (78)			5.7 – 6.3 kg/cm²	81 – 90 psi	559 – 618 kPa
Differential gear ratio 4.111					
Output shaft rpm	7.50R16-6	7.00-16-6	31 × 10.5R-15		
1,000	35 (22)	33 (21)	34 (21)	0.8 – 1.2 kg/cm²	11 – 17 psi	78 – 118 kPa
1,800	63 (39)	57 (35)	61 (38)	2.0 – 2.4 kg/cm²	28 – 34 psi	196 – 235 kPa
3,500	123 (76)	110 (68)	119 (74)	5.7 – 6.3 kg/cm²	81 – 90 psi	559 – 618 kPa
	7.50-16-6				
1,000	35 (22)			0.8 – 1.2 kg/cm²	11 – 17 psi	78 – 118 kPa
1,800	64 (40)			2.0 – 2.4 kg/cm²	28 – 34 psi	196 – 235 kPa
3,500	124 (77)			5.7 – 6.3 kg/cm²	81 – 90 psi	559 – 618 kPa
Governor pressure (HZJ)					
Differential gear ratio 4.111					
	Vehicle speed km/h (mph)				
Output shaft rpm	7.50R16-6	265/75R-15			
1,000	35 (22)	34 (21)		0.8 – 1.2 kg/cm²	11 – 17 psi	78 – 118 kPa
1,800	64 (40)	61 (38)		2.0 – 2.4 kg/cm²	28 – 34 psi	196 – 235 kPa
3,500	124 (77)	118 (74)		5.7 – 6.3 kg/cm²	81 – 90 psi	559 – 618 kPa
Line pressure					
Idling			D range	3.7 – 4.3 kg/cm²	53 – 61 psi	363 – 422 kPa
			R range	4.5 – 5.5 kg/cm²	64 – 78 psi	441 – 539 kPa
Stall			D range	11.1 – 13.6 kg/cm²	158 – 193 psi	1,089 – 1,334 kPa
			R range	14.0 – 17.0 kg/cm²	199 – 242 psi	1,373 – 1,667 kPa
Engine stall revolution			3F engine	1,850 ± 150 rpm		
			1HZ engine	1,900 ± 150 rpm		
Engine idle speed			3F engine	750 rpm		
			1HZ engine	710 rpm		
Time lag		N range → D range		Less than 0.7 seconds		
		N range → R range		Less than 1.2 seconds		
Throttle cable adjustment					
Throttle valve fully closed (Engine idling)				Between boot end face and inner cable stopper		
				0.5 – 1.5 mm	0.020 – 0.059 in.	
Throttle cable stroke				33 ± 1 mm	1.30 ± 0.04 in.	
Torque converter runout			Limit	0.30 mm	0.0118 in.	
Torque converter installation			3F engine	15.7 mm (0.618 in.) or more		
			1HZ engine	43.8 mm (1.724 in.) or more		
Drive plate runout			Limit	0.20 mm	0.0079 in.	

Specifications (Cont'd)

Shift point (3F engine)												km/h (mph)
Differential gear ratio	Tire size	D range								2 range		1 range
		Throttle valve fully open							[ ] opening 25%			
		1→2	2→3	3→4	[Lock-up ON]	[Lock-up OFF]	4→3	3→2	2→1	3→2		2→1
3.727	7.00-15-6	32–47 (20–29)	78–93 (48–58)	124–138 (77–86)	73–86 (45–53)	68–80 (42–50)	114–128 (71–80)	68–83 (42–52)	27–41 (17–25)	81–95 (50–59)		44–58 (27–36)
4.111	7.00-16-6	30–44 (19–27)	73–87 (45–54)	116–129 (72–80)	69–81 (43–50)	64–75 (40–47)	107–120 (66–75)	64–79 (40–49)	25–38 (16–24)	76–89 (47–55)		41–54 (25–34)
4.111	31 × 10.50 R15	31–44 (19–27)	75–88 (45–55)	118–131 (73–81)	70–82 (43–51)	65–77 (40–48)	108–122 (67–76)	65–79 (40–49)	26–39 (16–24)	77–91 (48–57)		42–55 (26–34)
4.111	7.50-16-6	32–46 (20–29)	76–90 (47–56)	121–135 (75–84)	72–84 (45–52)	66–78 (41–48)	111–125 (69–78)	67–81 (42–50)	27–40 (17–25)	80–94 (50–58)		43–57 (27–35)
4.111	750R-16-8	32–46 (20–29)	77–91 (48–57)	122–136 (76–85)	72–85 (45–53)	67–79 (42–49)	112–126 (70–78)	67–81 (42–50)	27–40 (17–25)	80–94 (50–58)		43–57 (27–35)
Shift point (1HZ engine)												
4.111	7.50R-16-6	32–46 (20–29)	77–91 (48–57)	122–136 (76–85)	72–85 (45–53)	67–79 (42–49)	112–126 (70–78)	67–81 (42–50)	27–40 (17–25)	80–94 (50–58)		43–57 (27–35)
4.111	265/75 R15	30–44 (19–27)	74–87 (46–54)	116–130 (72–81)	60–72 (37–45)	54–67 (34–42)	107–120 (66–75)	64–78 (40–48)	25–38 (16–24)	76–89 (47–55)		41–55 (25–34)

Torque Specifications

Part tightened		kg-cm	ft-lb	N·m
Engine × Transmission	8 mm	185	13	18
	10 mm	380	27	37
	12 mm	730	53	72
Drive plate × Crankshaft	3F engine	900	65	88
	1HZ engine	1,300	94	127
Torque converter × Drive plate	3F engine	290	21	28
	1HZ engine	550	40	54
Valve body	6 mm	100	7	10
	5 mm	55	48 in.-lb	5.4
Oil pan		70	61 in.-lb	6.9
Oil pan drain plug		280	20	27
Cooler pipe union nut		350	25	34
Testing plug		75	65 in.-lb	7.4
Neutral start switch (bolt)		130	9	13
Neutral start switch (nut)		70	61 in.-lb	6.9
Frame crossmember set bolt		620	45	61
Frame crossmember set nut		600	43	59
PTO × Drive shaft		200	14	20
Exhaust front pipe × Exhaust manifold		630	46	62
Exhaust front pipe × Exhaust tail pipe		400	29	39

STANDARD BOLT TORQUE SPECIFICATIONS

HOW TO DETERMINE BOLT STRENGTH

	Mark	Class		Mark	Class
Hexagon head bolt	Bolt head No. 4– 5– 6– 7–	4T 5T 6T 7T	Stud bolt	No mark	4T
	No mark	4T			
Hexagon flange bolt w/washer hexagon bolt	No mark	4T		Grooved	6T
Hexagon head bolt	Two protruding lines	5T			
Hexagon flange bolt w/washer hexagon bolt	Two protruding lines	6T	Welded bolt	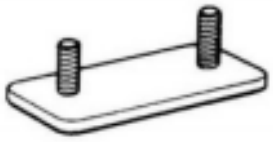	4T
Hexagon head bolt	Three protruding lines	7T			

SPECIFIED TORQUE FOR STANDARD BOLTS

Class	Diameter mm	Pitch mm	Hexagon head bolt			Hexagon flange bolt		
			kg-cm	ft-lb	N·m	kg-cm	ft-lb	N·m
4T	6	1	55	48 in.-lb	5.4	60	52 in.-lb	5.9
	8	1.25	130	9	13	145	10	14
	10	1.25	260	19	25	290	21	28
	12	1.25	480	35	47	540	39	53
	14	1.5	760	55	75	850	61	83
	16	1.5	1,150	83	113		–	
5T	6	1	65	56 in.-lb	6.4		–	
	8	1.25	160	12	16		–	
	10	1.25	330	24	32		–	
	12	1.25	600	43	59		–	
	14	1.5	930	67	91		–	
	16	1.5	1,400	101	137		–	
6T	6	1	80	69 in.-lb	7.8	90	78 in.-lb	8.8
	8	1.25	195	14	19	215	16	21
	10	1.25	400	29	39	440	32	43
	12	1.25	730	53	72	810	59	79
	14	1.5		–		1,250	90	123
7T	6	1	110	8	11	120	9	12
	8	1.25	260	19	25	290	21	28
	10	1.25	530	38	52	590	43	58
	12	1.25	970	70	95	1,050	76	103
	14	1.5	1,500	108	147	1,700	123	167
	16	1.5	2,300	166	226		–	

SST(SPECIAL SERVICE TOOLS)

Section / Illustration • Part No. • Part Name	A440F	A440L
09309-36033 (Transmission Bearing Replacer)	●	
09330-00021 (Companion Flange Holding Tool)	●	
09350-36010 (TOYOTA Automatic Transmission Tool Set)	●	●
09950-20016 (Universal Puller)	●	

SSM(SPECIAL SERVICE MATERIALS)

Part Name	Part No.	Sec.	Use, etc.
Seal packing (THREE BOND 1324)	08833-00070	AT	Transmission case x Transfer adapter Transfer rear case x Bearing retainer Transfer No. 2 case cover x Rear case Power take-off cover x Rear case
Seal packing (LOCTITE No. 242)	—	AT	Center support x Transmission case Overdrive support x Transmission case Oil pump x Transmission case Power take-off cover x Transmission case

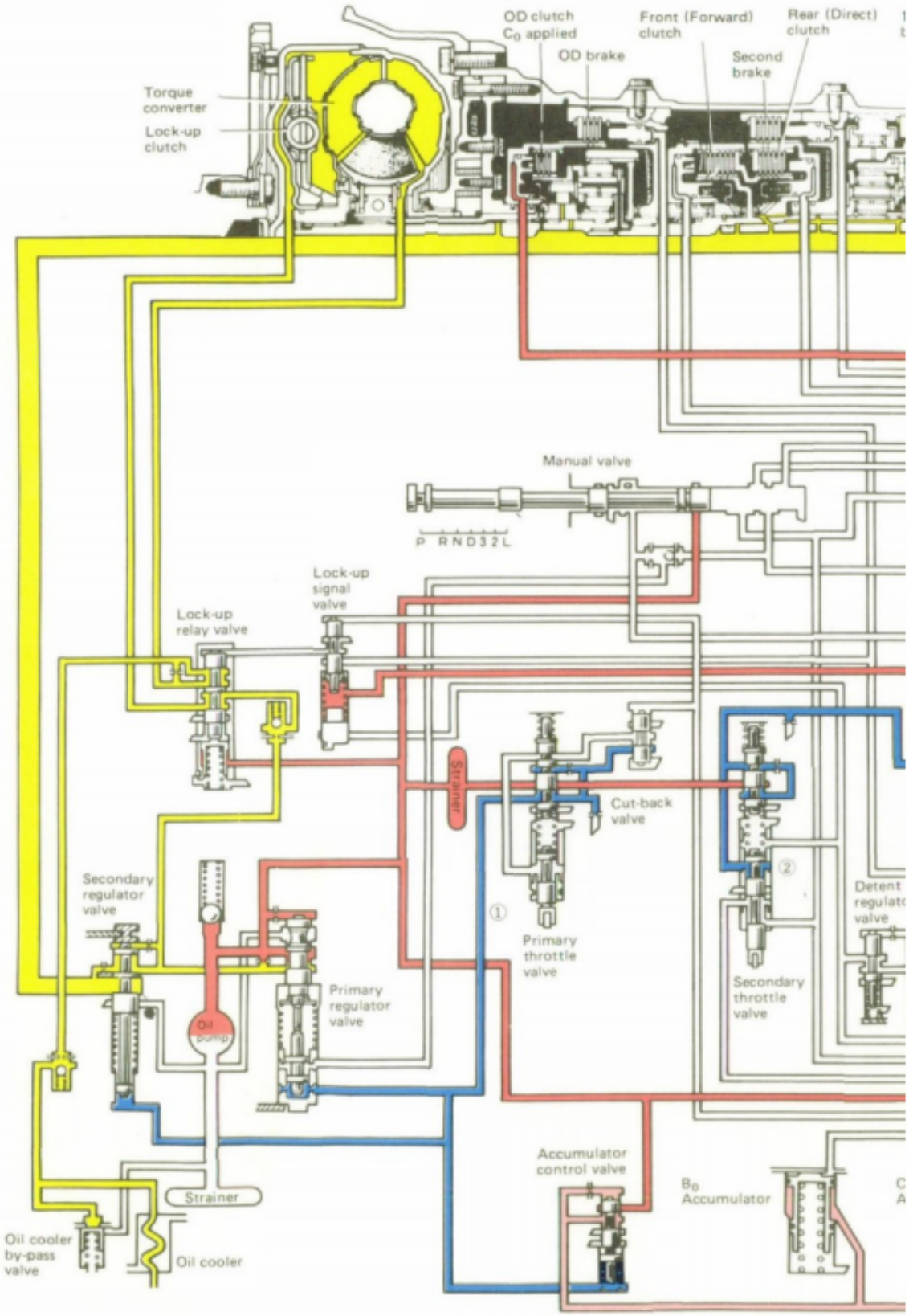
OD clutch
C_0 applied
OD brake
Front (Forward) clutch
Second brake
Rear (Direct) clutch
Torque converter
Lock-up clutch
Manual valve
P R N D 3 2 L
Lock-up signal valve
Lock-up relay valve
Strainer
Cut-back valve
Secondary regulator valve
①
②
Primary throttle valve
Secondary throttle valve
Detent regulator valve
Primary regulator valve
Oil pump
Accumulator control valve
B_0 Accumulator
Strainer
Oil cooler by-pass valve
Oil cooler

A440F "P" RANGE CIRCUIT

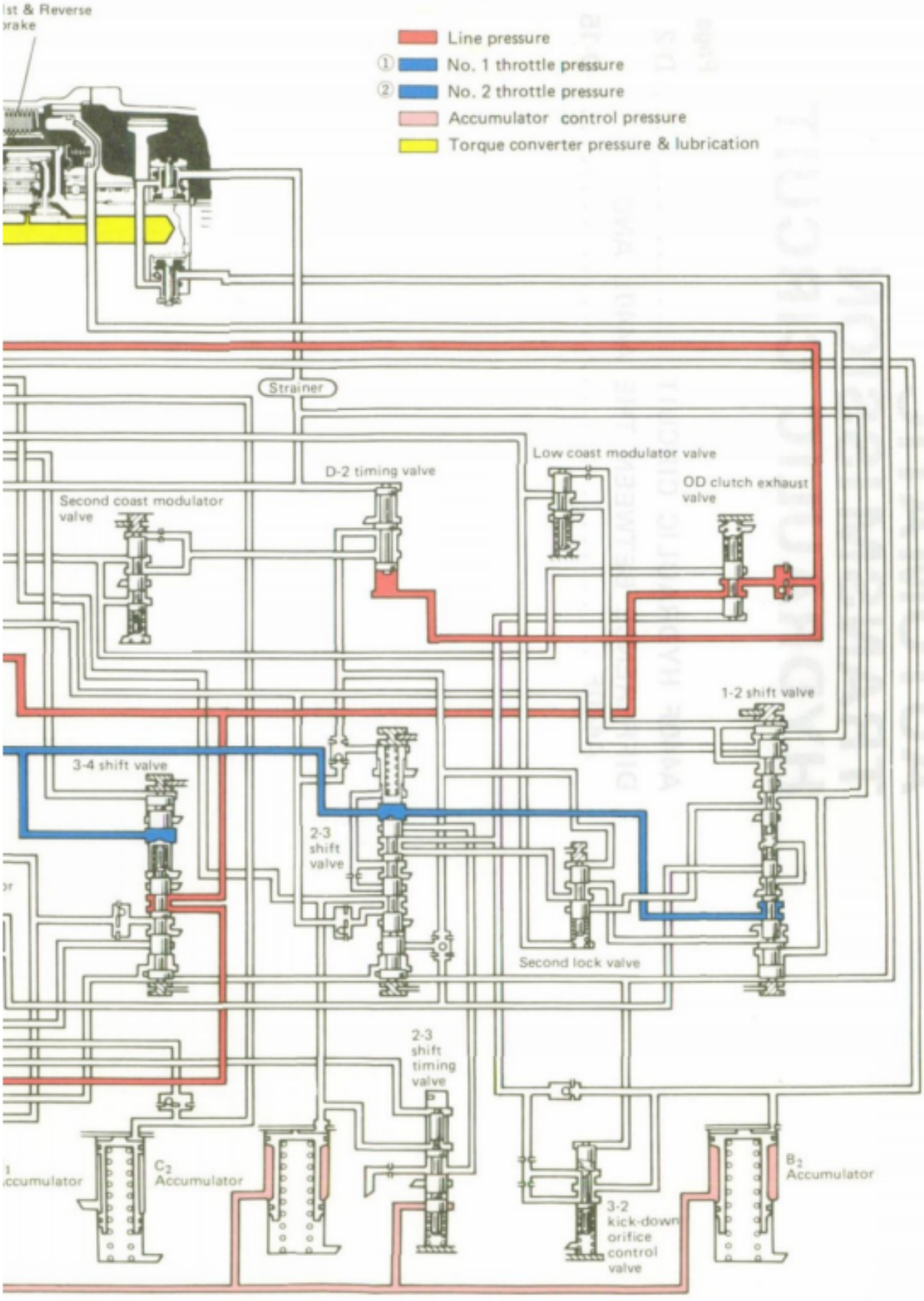

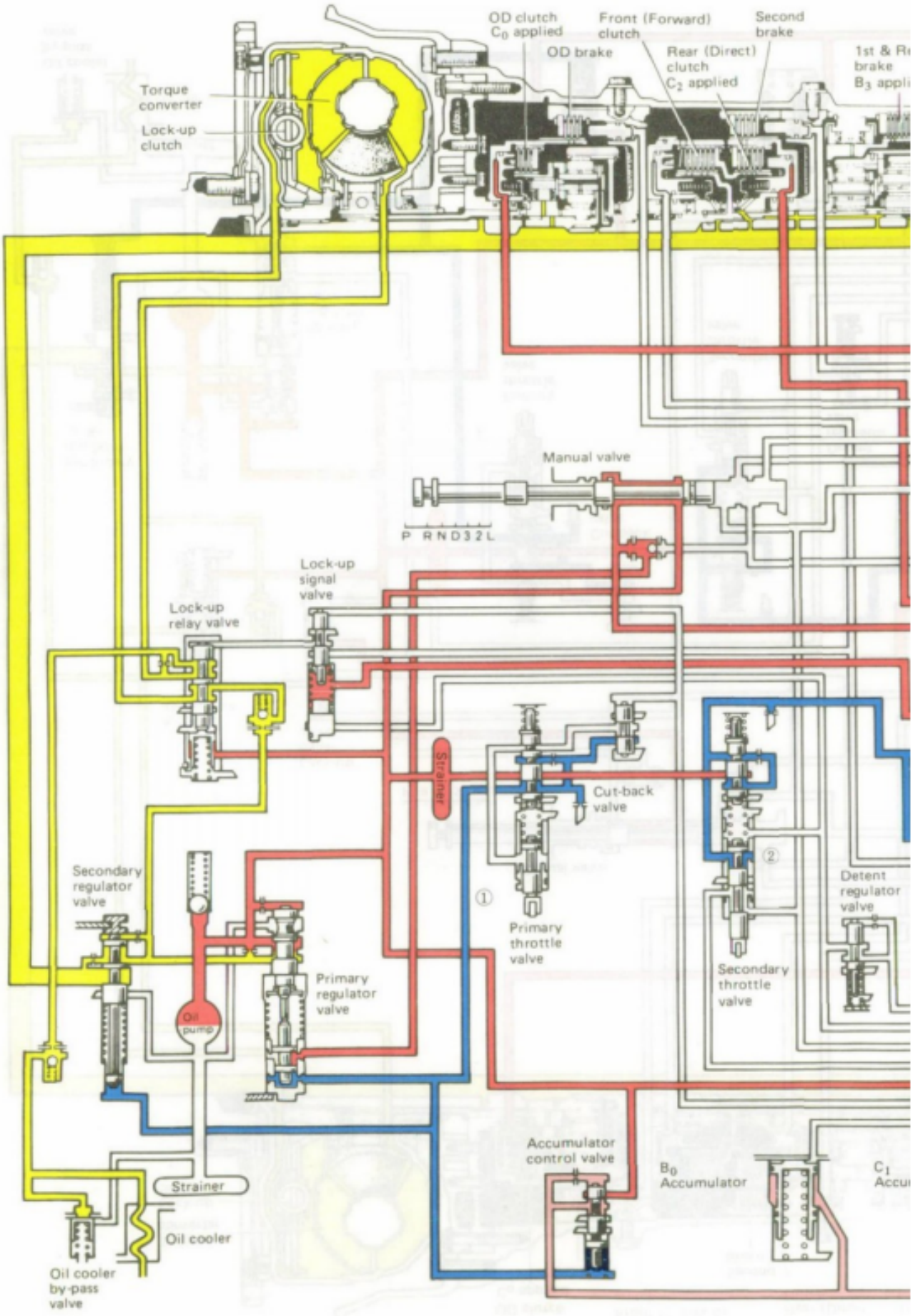
OD clutch
C_0 applied
Front (Forward)
clutch
Second
brake
OD brake
Rear (Direct)
clutch
C_2 applied
1st & R
brake
B_3 appli
Torque
converter
Lock-up
clutch
Manual valve
P R N D 3 2 L
Lock-up
signal
valve
Lock-up
relay valve
Strainer
Cut-back
valve
Secondary
regulator
valve
①
②
Primary
throttle
valve
Detent
regulator
valve
Secondary
throttle
valve
Primary
regulator
valve
Oil
pump
Accumulator
control valve
B_0
Accumulator
C_1
Accu
Strainer
Oil cooler
Oil cooler
by-pass
valve

A440F "R" RANGE CIRCUIT

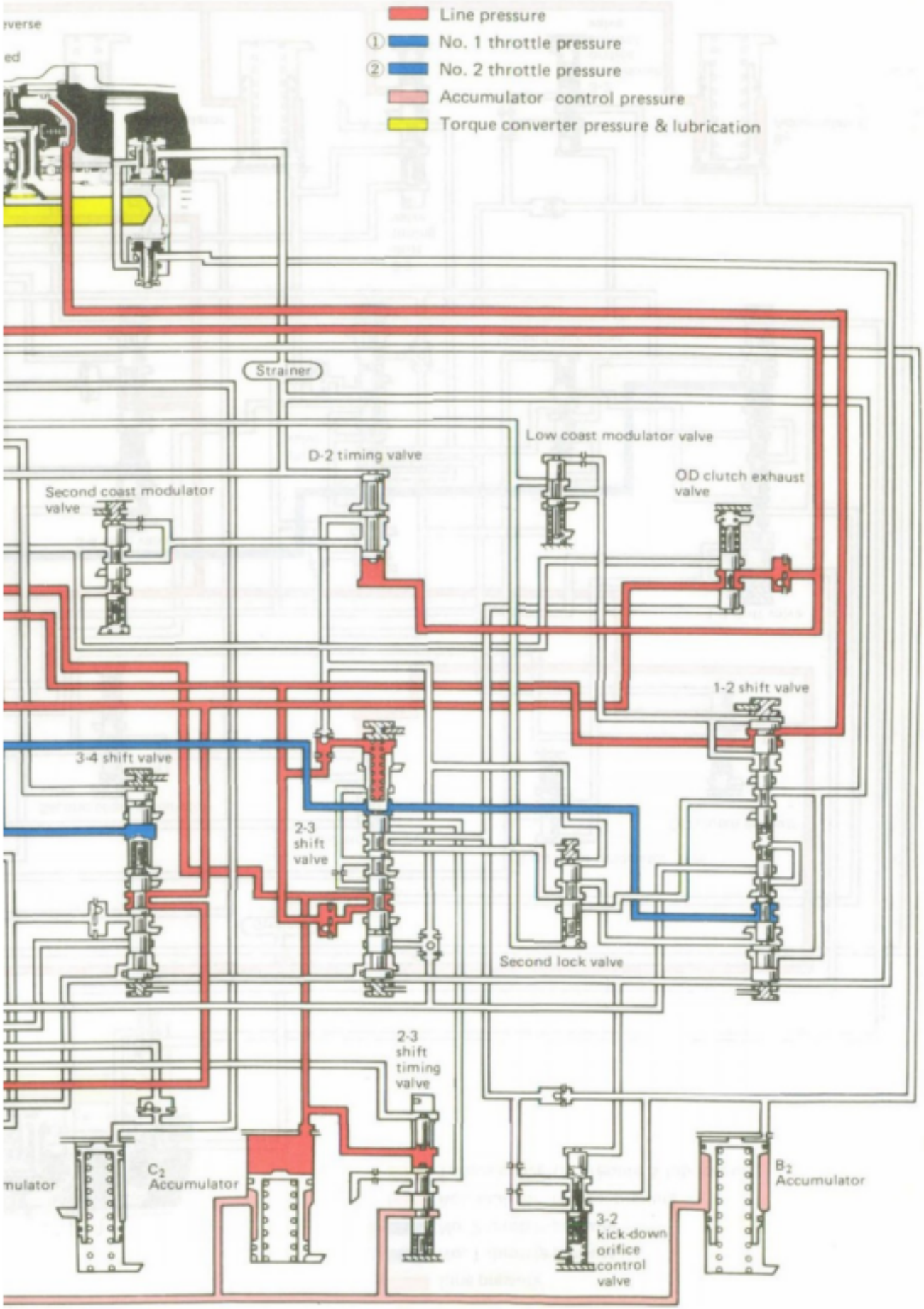

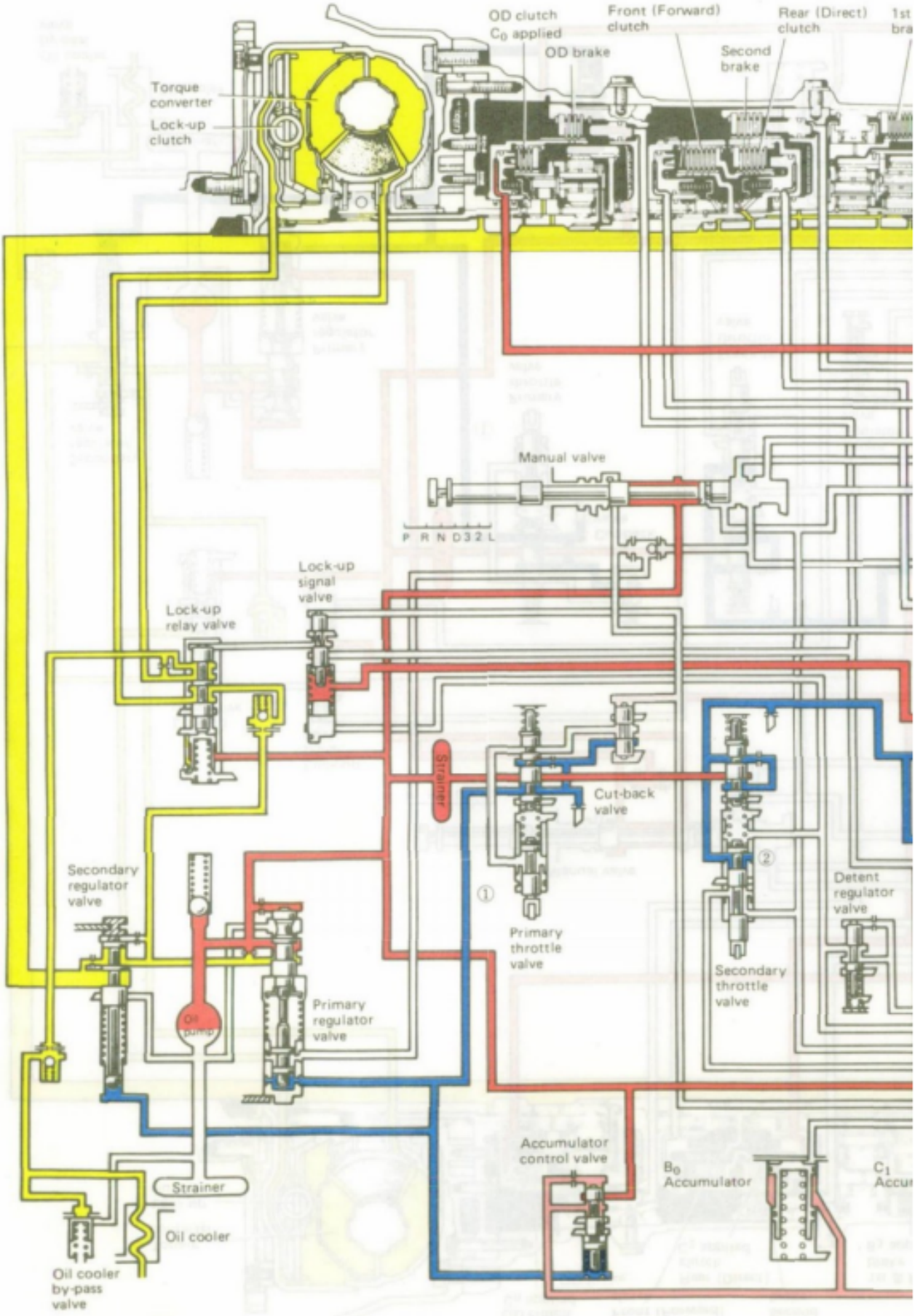
OD clutch
C_0 applied
Front (Forward) clutch
Rear (Direct) clutch
1st bra
OD brake
Second brake
Torque converter
Lock-up clutch
Manual valve
P R N D 3 2 L
Lock-up signal valve
Lock-up relay valve
Strainer
Cut-back valve
Secondary regulator valve
①
②
Detent regulator valve
Primary throttle valve
Secondary throttle valve
Oil pump
Primary regulator valve
Accumulator control valve
B_0 Accumulator
C_1 Accu
Strainer
Oil cooler
Oil cooler by-pass valve

A440F "N" RANGE CIRCUIT

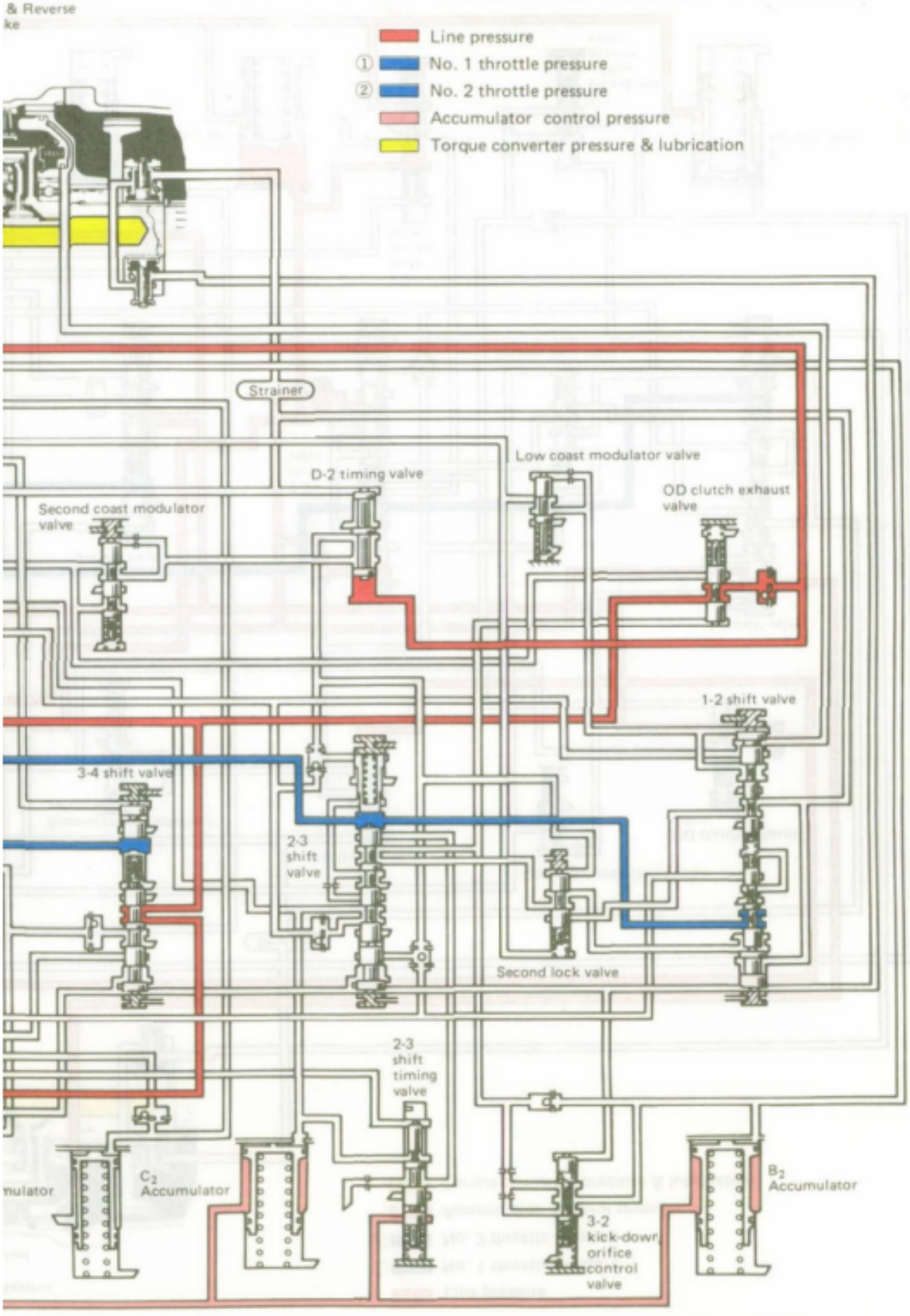

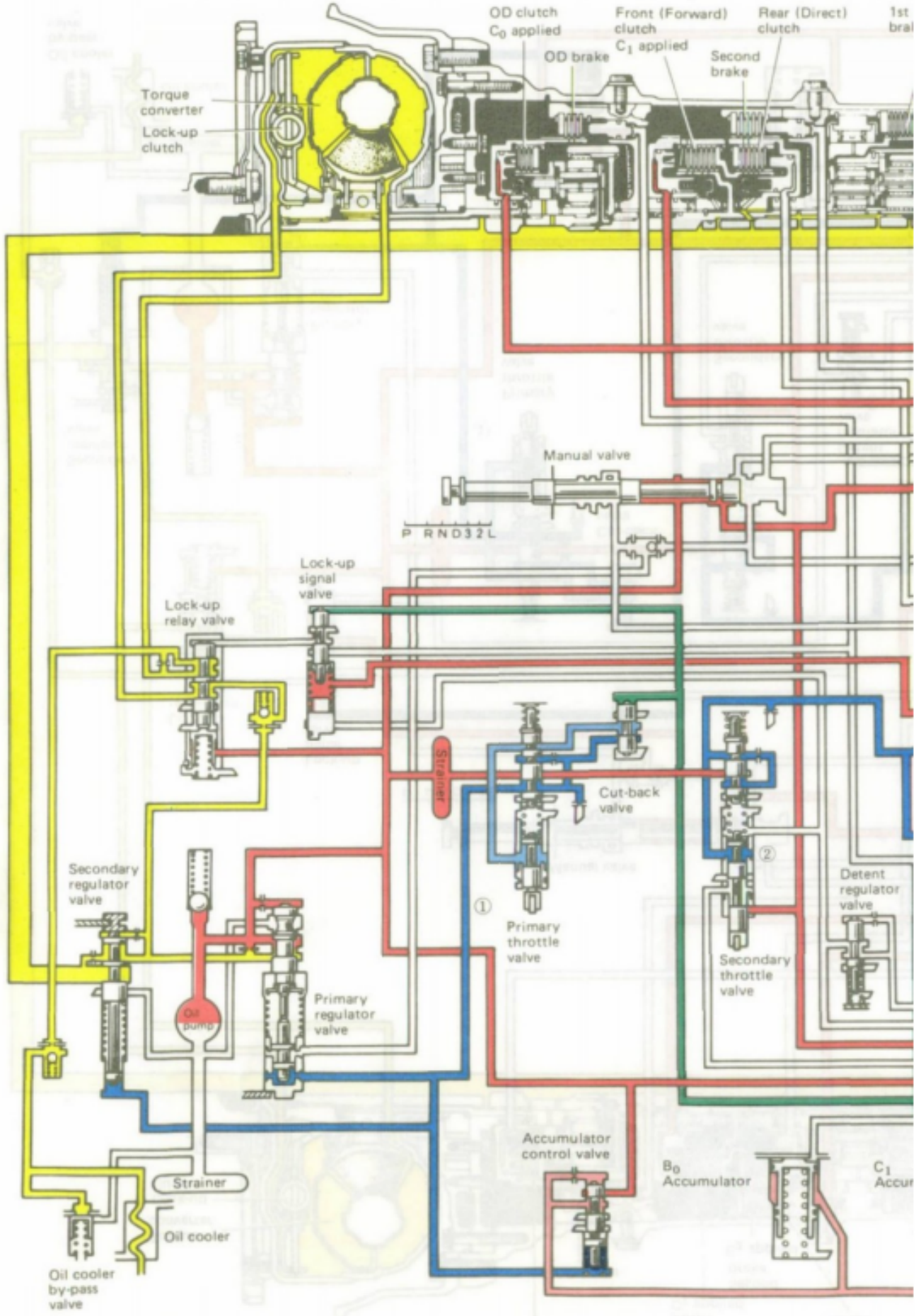
OD clutch
C_0 applied
OD brake
Front (Forward) clutch
C_1 applied
Second brake
Rear (Direct) clutch
1st
Torque converter
Lock-up clutch
Manual valve
P R N D 3 2 L
Lock-up signal valve
Lock-up relay valve
Strainer
Cut-back valve
①
②
Primary throttle valve
Secondary throttle valve
Detent regulator valve
Secondary regulator valve
Oil pump
Primary regulator valve
Accumulator control valve
B_0 Accumulator
C_1 Accu
Strainer
Oil cooler
Oil cooler by-pass valve

A440F "D" RANGE FIRST GEAR CIRCUIT

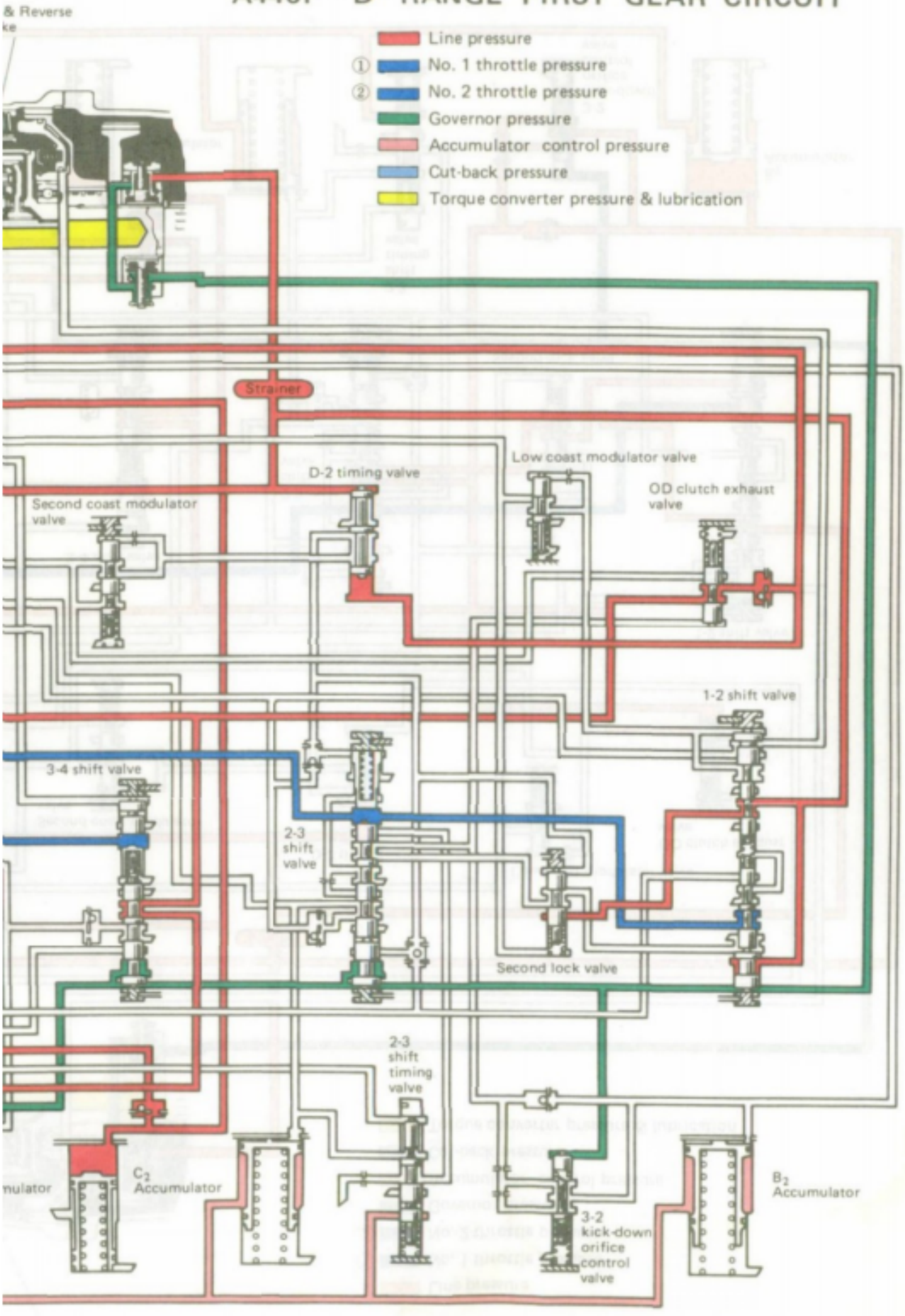

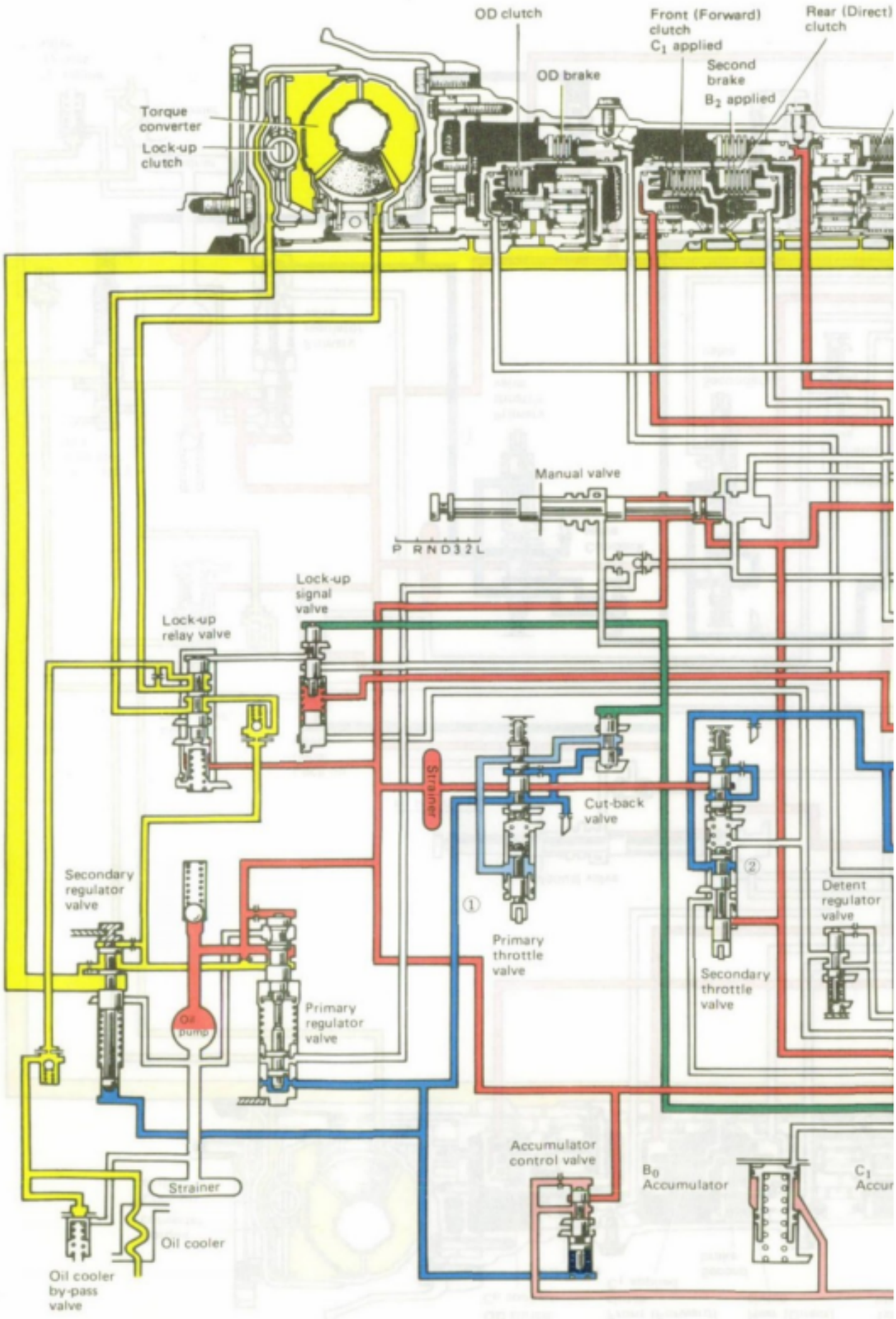
OD clutch
Front (Forward) clutch C_1 applied
Rear (Direct) clutch
OD brake
Second brake B_2 applied
Torque converter
Lock-up clutch
Manual valve
P R N D 3 2 L
Lock-up signal valve
Lock-up relay valve
Strainer
Cut-back valve
Secondary regulator valve
Primary throttle valve
Detent regulator valve
Secondary throttle valve
Oil pump
Primary regulator valve
Accumulator control valve
B_0 Accumulator
C_1 Accum
Strainer
Oil cooler
Oil cooler by-pass valve

A440F "D" RANGE SECOND GEAR CIRCUIT

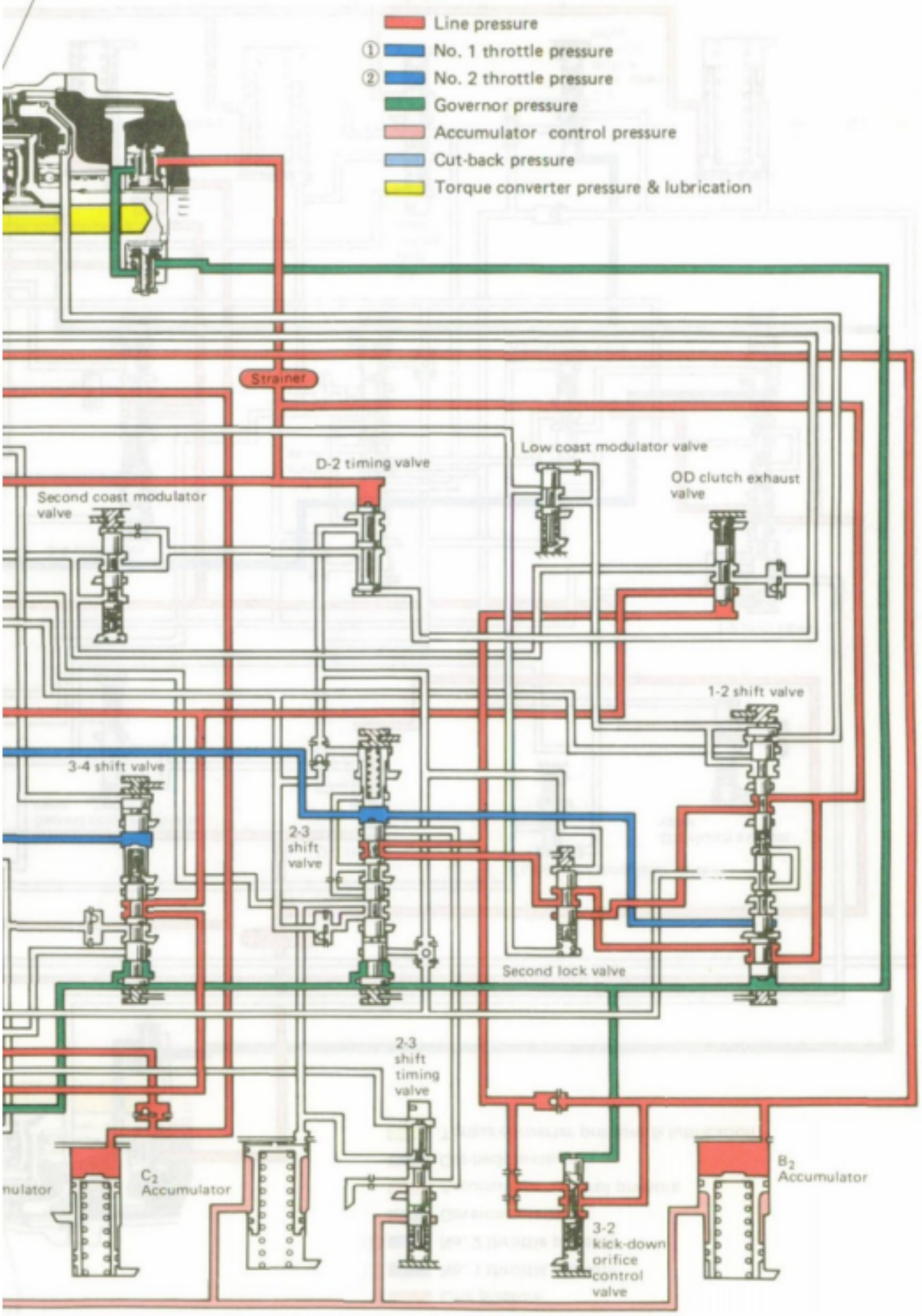

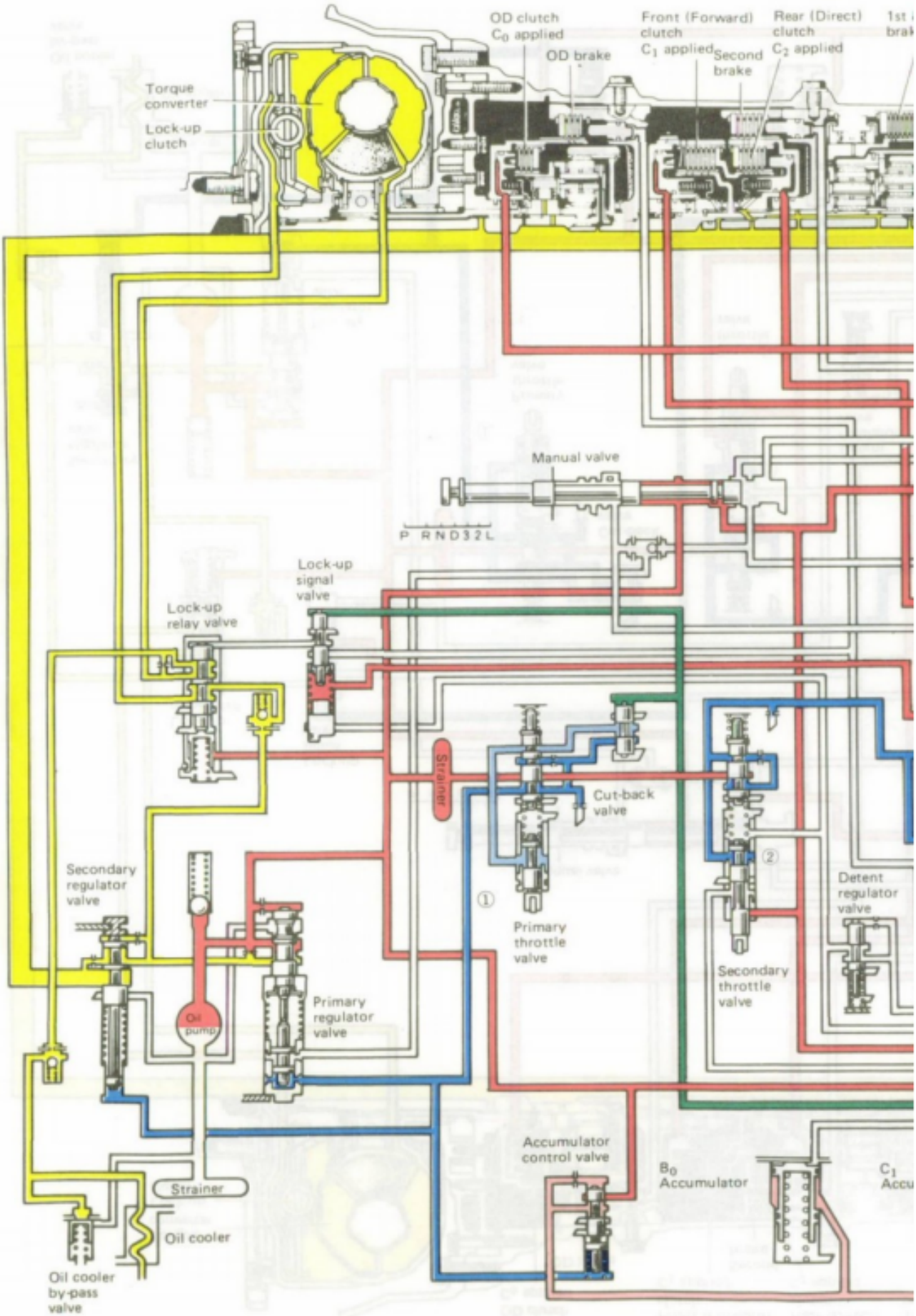
OD clutch
C_0 applied
OD brake
Front (Forward) clutch
C_1 applied
Second brake
Rear (Direct) clutch
C_2 applied
Torque converter
Lock-up clutch
Manual valve
P R N D 3 2 L
Lock-up signal valve
Lock-up relay valve
Strainer
Cut-back valve
Secondary regulator valve
Primary throttle valve
Detent regulator valve
Secondary throttle valve
Oil pump
Primary regulator valve
Accumulator control valve
B_0 Accumulator
Strainer
Oil cooler
Oil cooler by-pass valve

A440F "D" RANGE THIRD GEAR CIRCUIT

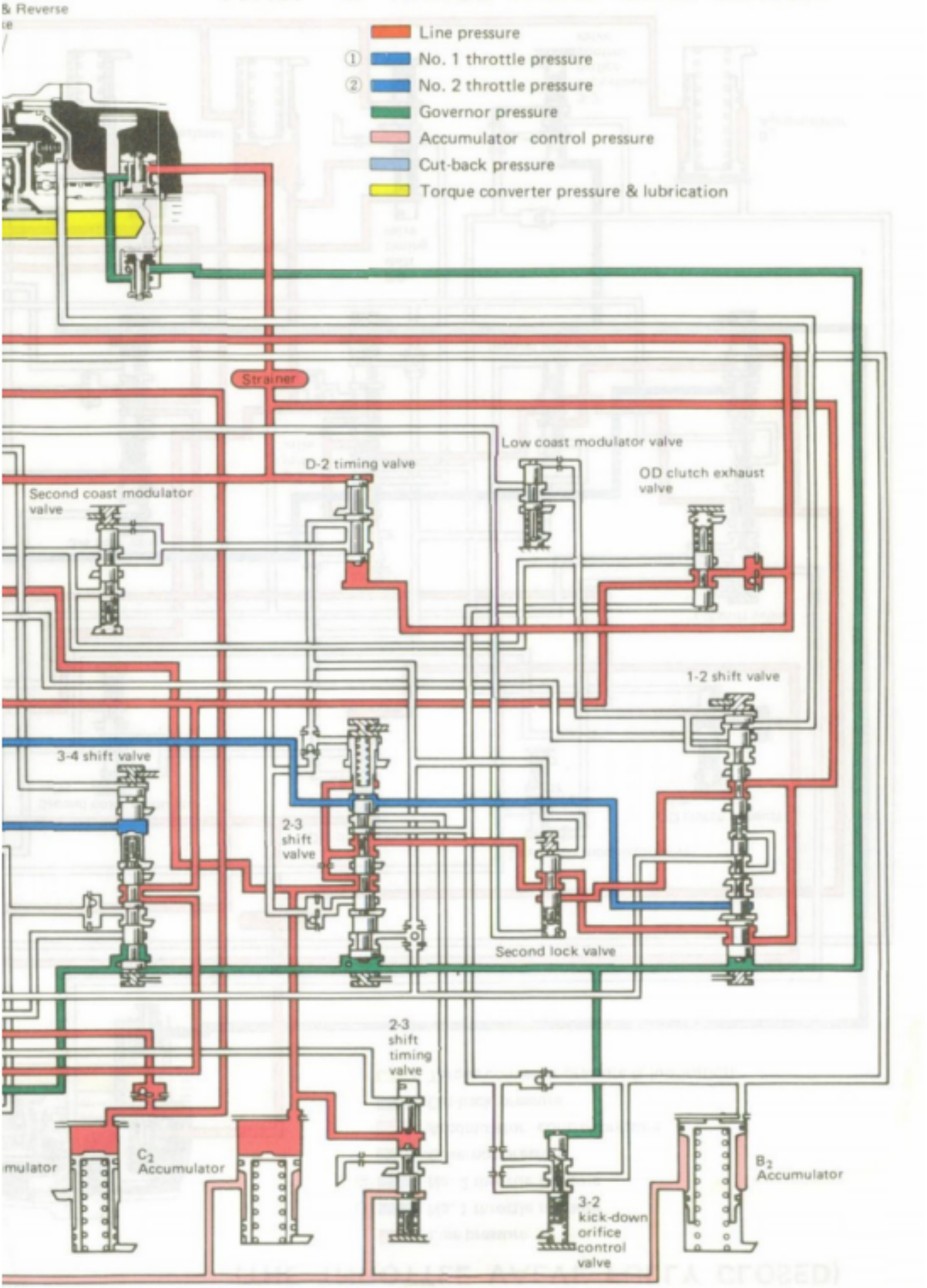

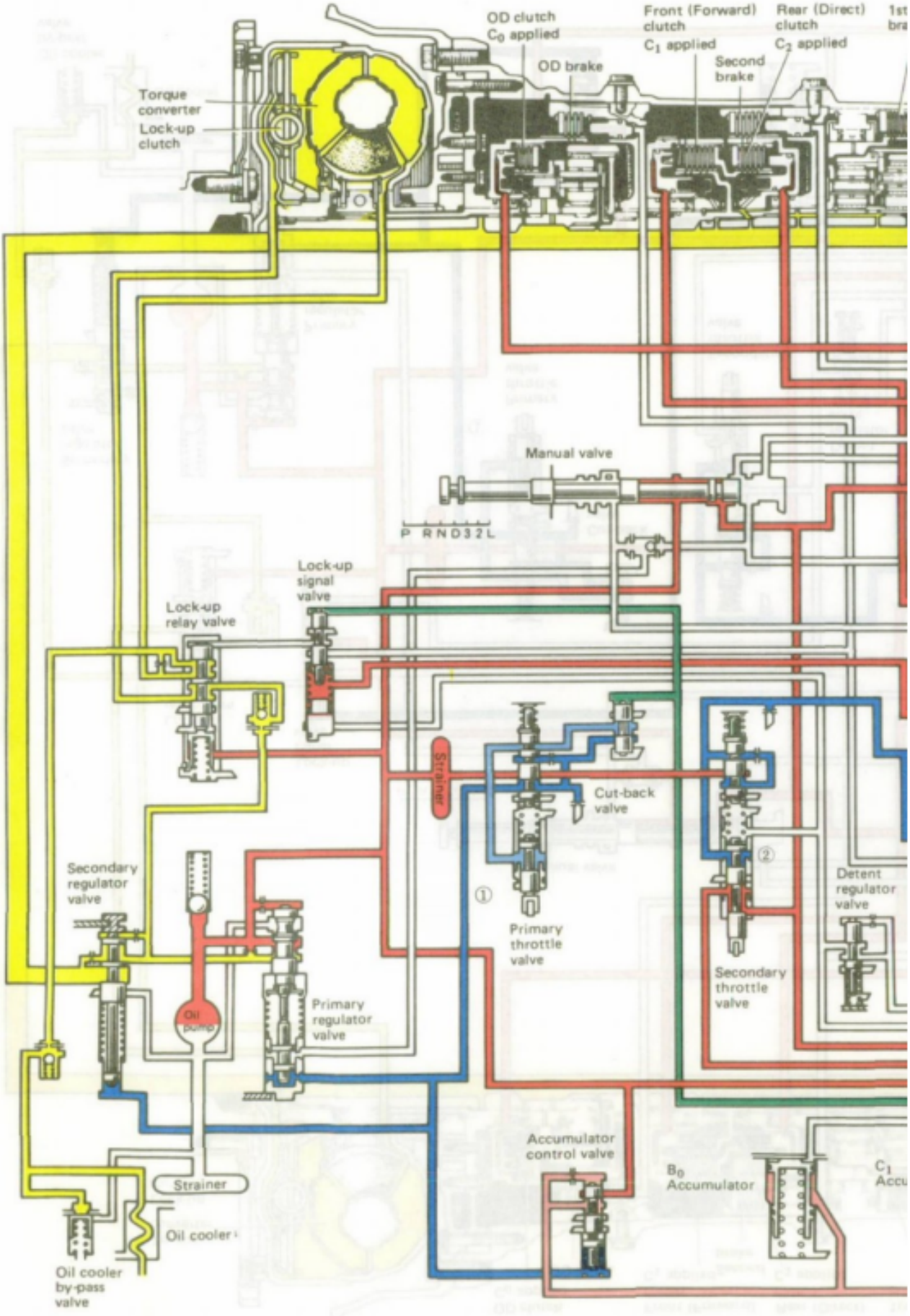
OD clutch
C_0 applied
Front (Forward) clutch
C_1 applied
Rear (Direct) clutch
C_2 applied
OD brake
Second brake
Torque converter
Lock-up clutch
Manual valve
P R N D 3 2 L
Lock-up signal valve
Lock-up relay valve
Strainer
Cut-back valve
Secondary regulator valve
Primary throttle valve
Detent regulator valve
Secondary throttle valve
Oil pump
Primary regulator valve
Accumulator control valve
B_0 Accumulator
Strainer
Oil cooler
Oil cooler by-pass valve

A440F "D" RANGE THIRD GEAR CIRCUIT (THE THROTTLE VALVE FULLY CLOSED)

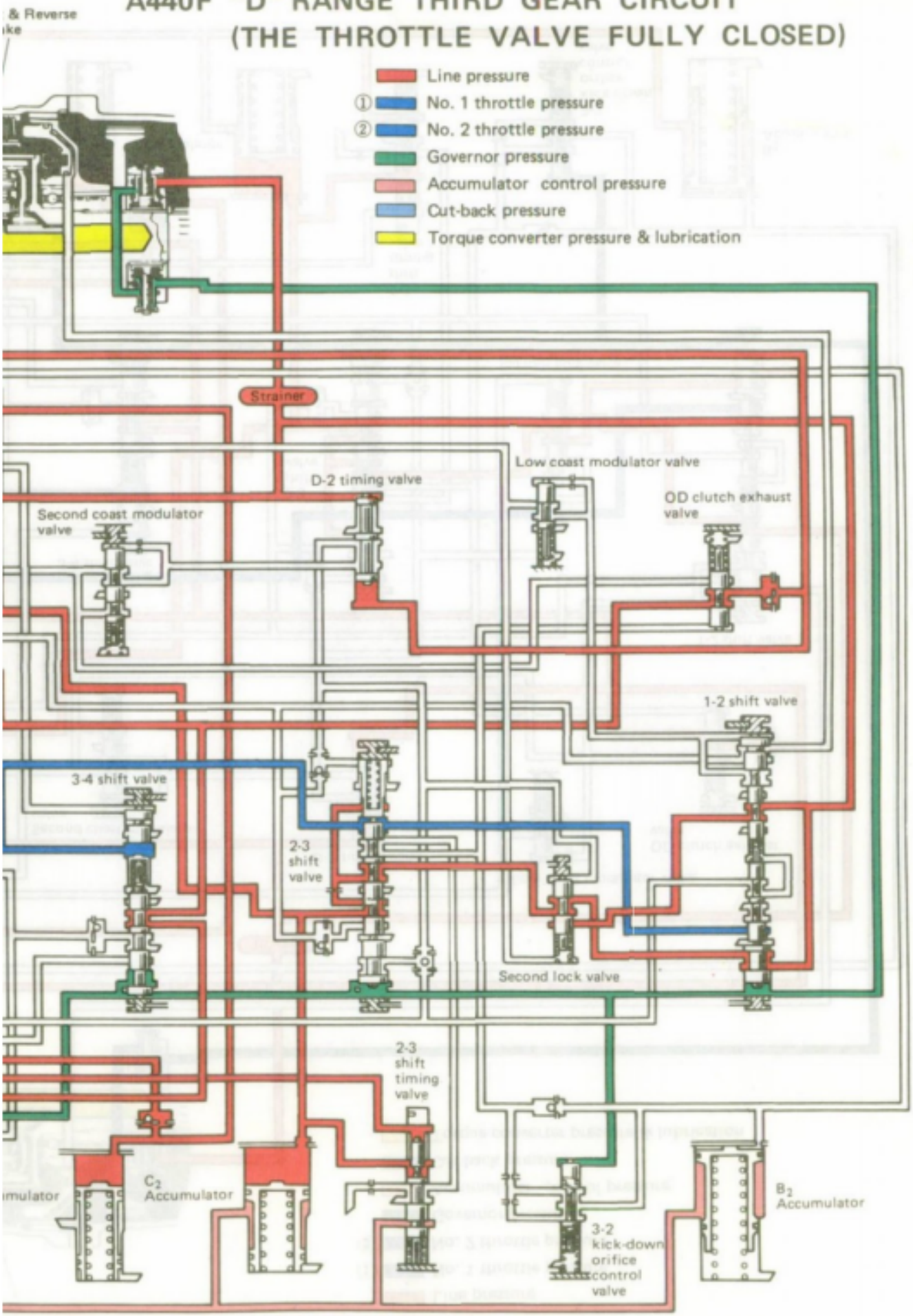

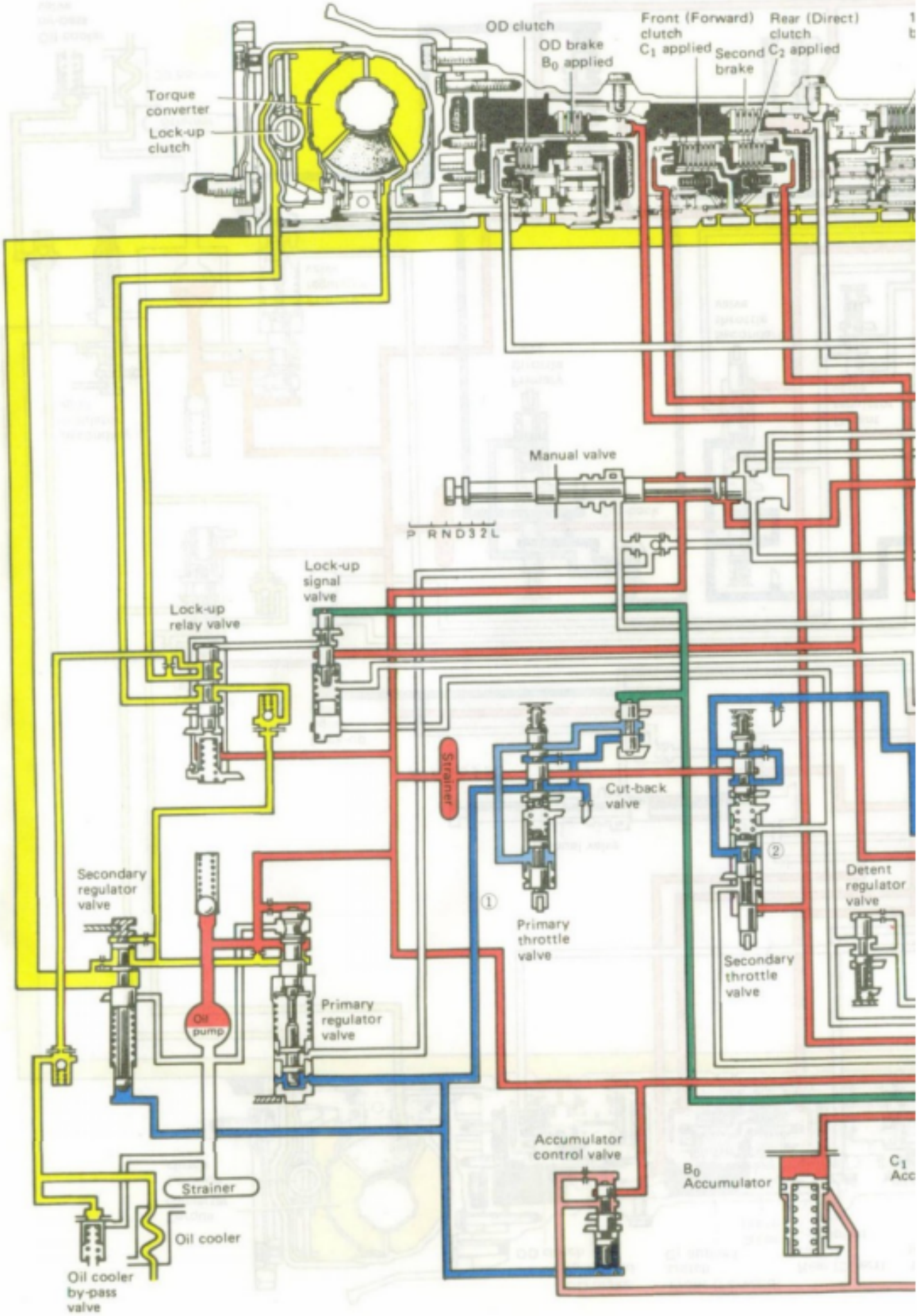
OD clutch
OD brake
B_0 applied
Front (Forward) clutch
C_1 applied
Second brake
Rear (Direct) clutch
C_2 applied
Torque converter
Lock-up clutch
Manual valve
P R N D 3 2 L
Lock-up signal valve
Lock-up relay valve
Strainer
Cut-back valve
①
②
Primary throttle valve
Secondary throttle valve
Detent regulator valve
Secondary regulator valve
Oil pump
Primary regulator valve
Accumulator control valve
B_0 Accumulator
C_1 Acc
Strainer
Oil cooler
Oil cooler by-pass valve

A440F "D" RANGE OD GEAR CIRCUIT (LOCK-UP OFF)

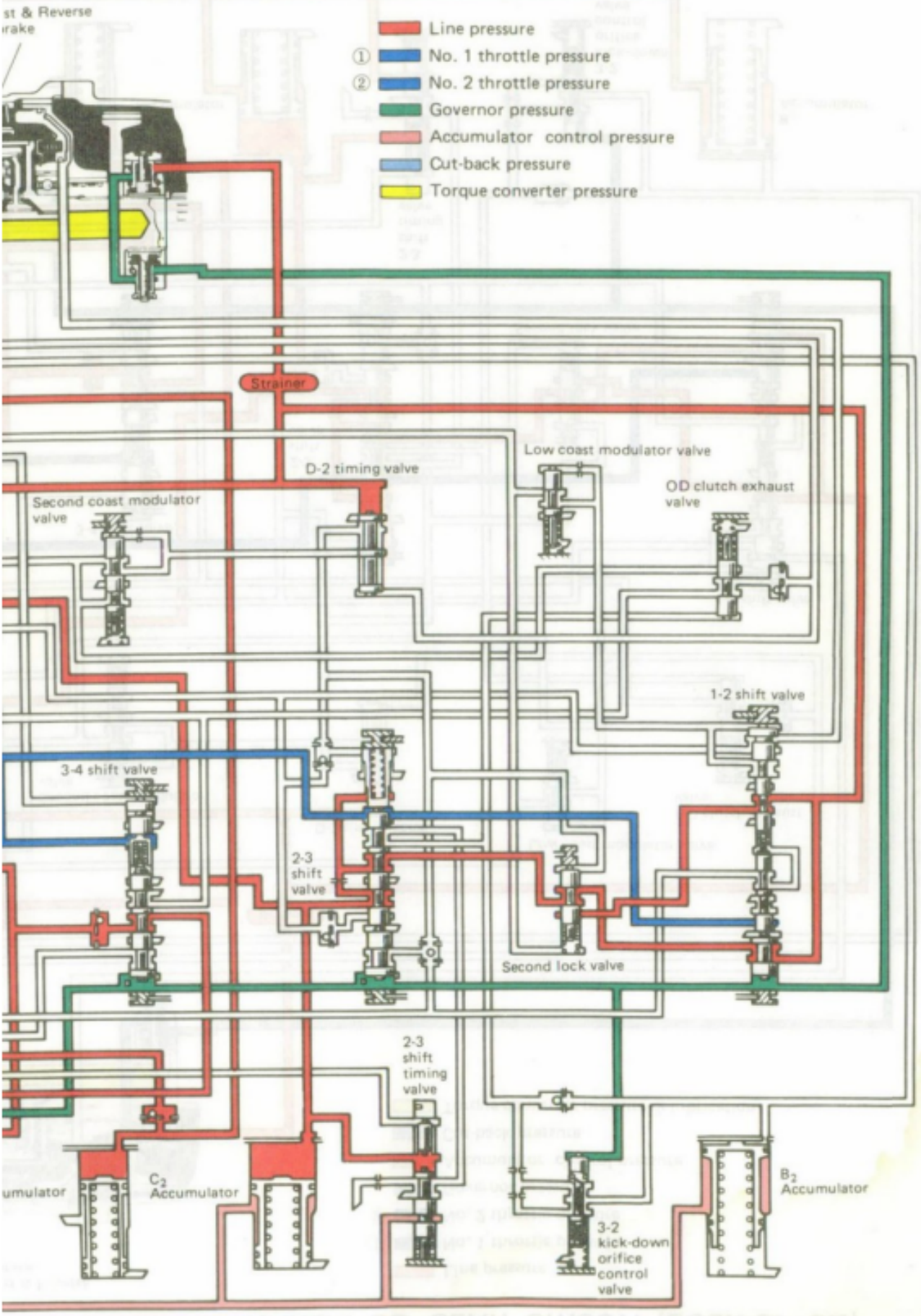

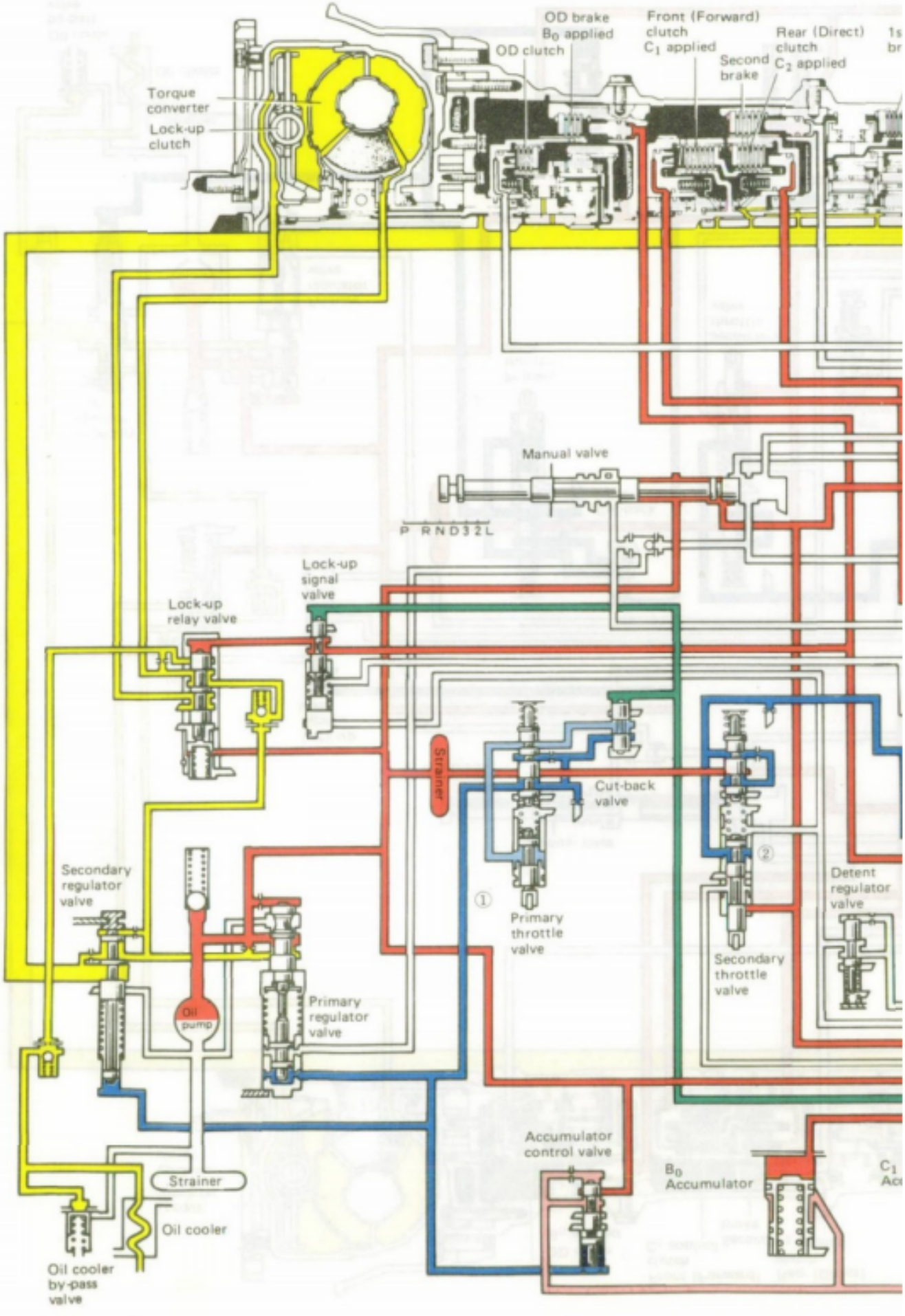
OD brake
B_0 applied
Front (Forward)
clutch
C_1 applied
Rear (Direct)
clutch
C_2 applied
OD clutch
Second
brake
Torque
converter
Lock-up
clutch
Manual valve
P R N D 3 2 L
Lock-up
signal
valve
Lock-up
relay valve
Strainer
Cut-back
valve
Secondary
regulator
valve
Primary
throttle
valve
Detent
regulator
valve
Secondary
throttle
valve
Oil
pump
Primary
regulator
valve
Accumulator
control valve
B_0
Accumulator
Strainer
Oil cooler
Oil cooler
by-pass
valve

A440F "D" RANGE OD GEAR CIRCUIT (LOCK-UP ON)

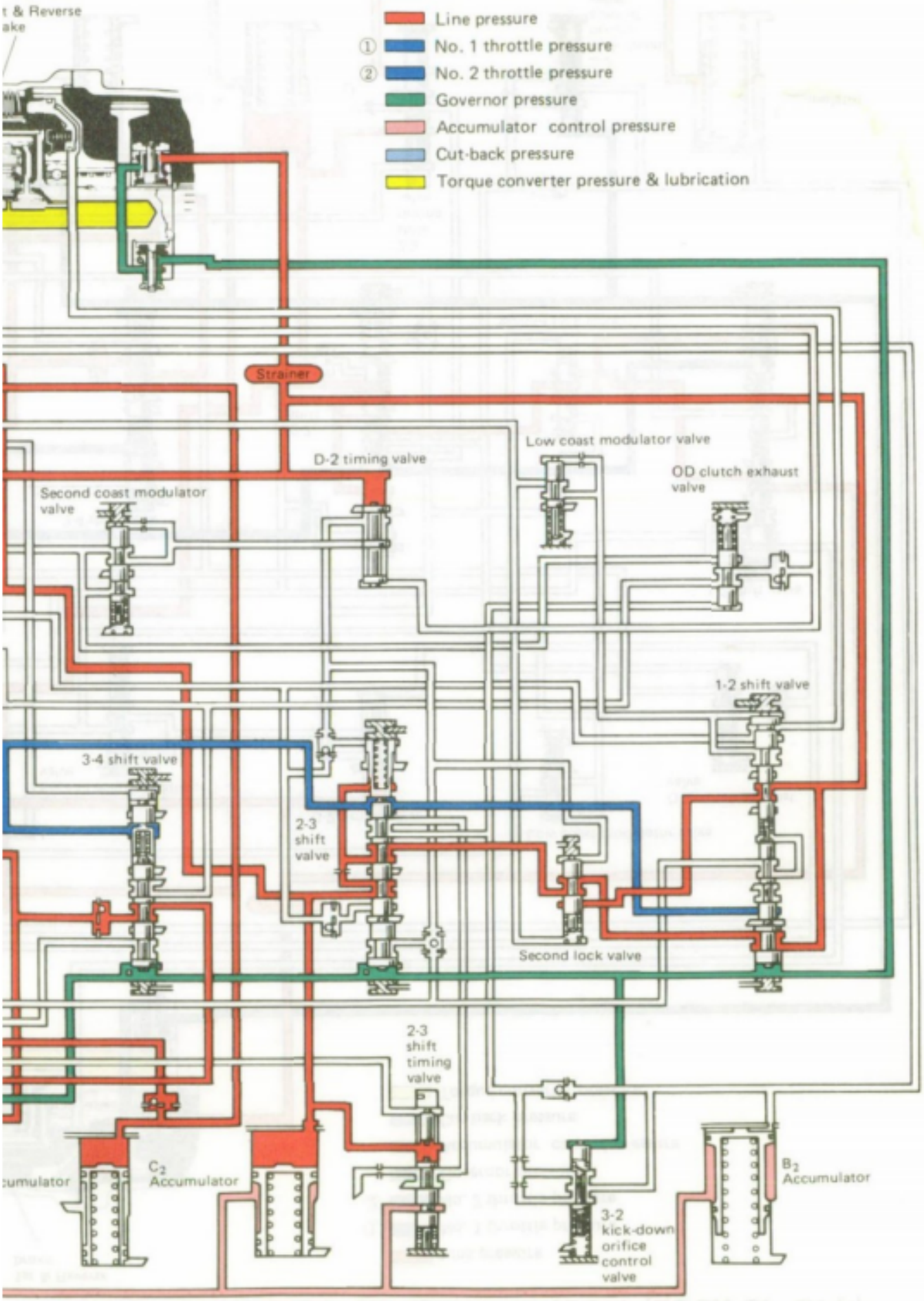

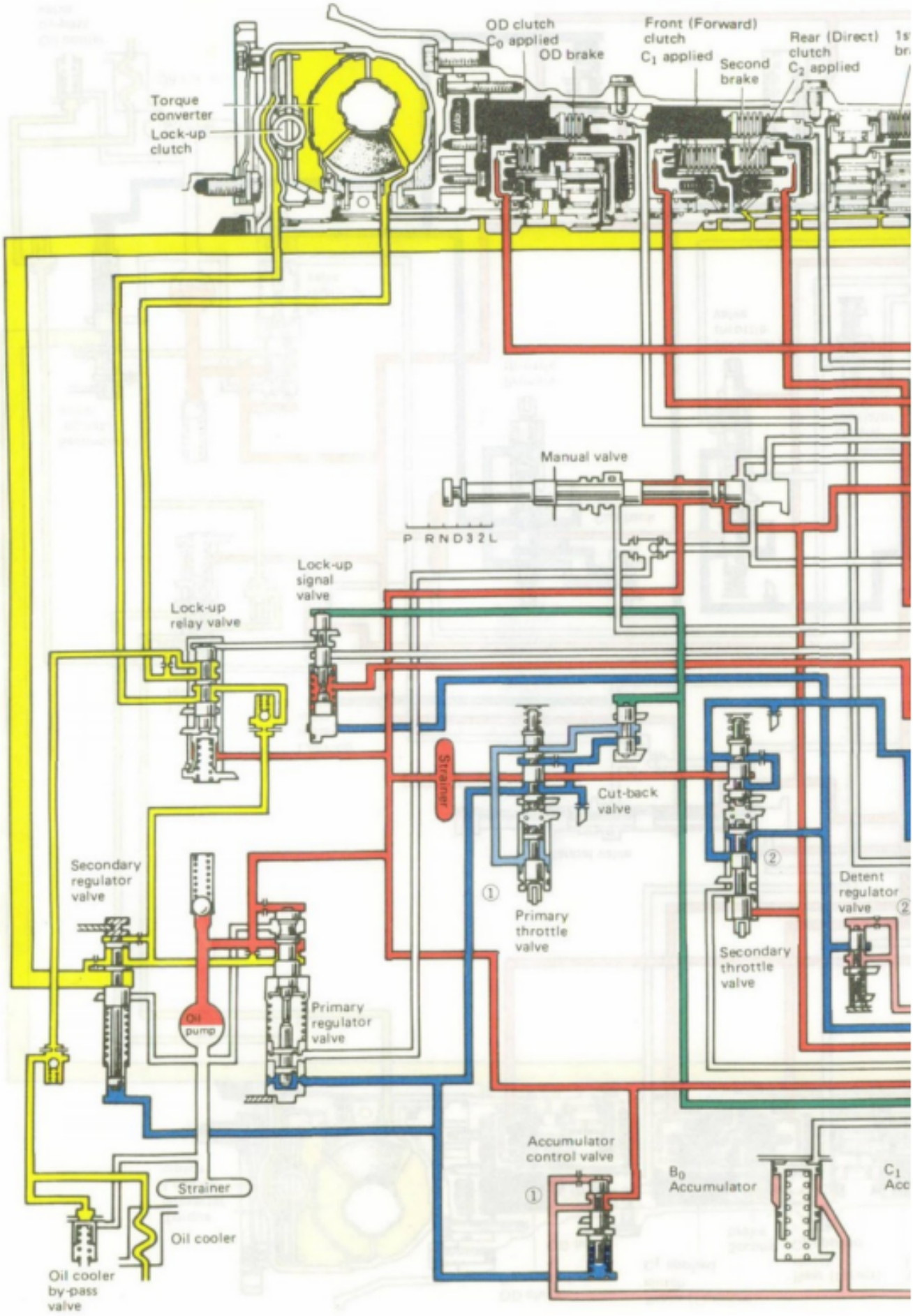
OD clutch
C_0 applied
OD brake
Front (Forward) clutch
C_1 applied
Second brake
Rear (Direct) clutch
C_2 applied
Torque converter
Lock-up clutch
Manual valve
P R N D 3 2 L
Lock-up signal valve
Lock-up relay valve
Strainer
Cut-back valve
Secondary regulator valve
Primary throttle valve
Detent regulator valve
Secondary throttle valve
Oil pump
Primary regulator valve
Accumulator control valve
B_0 Accumulator
Strainer
Oil cooler
Oil cooler by-pass valve

A440F "D" RANGE KICK-DOWN (OD → 3) CIRCUIT

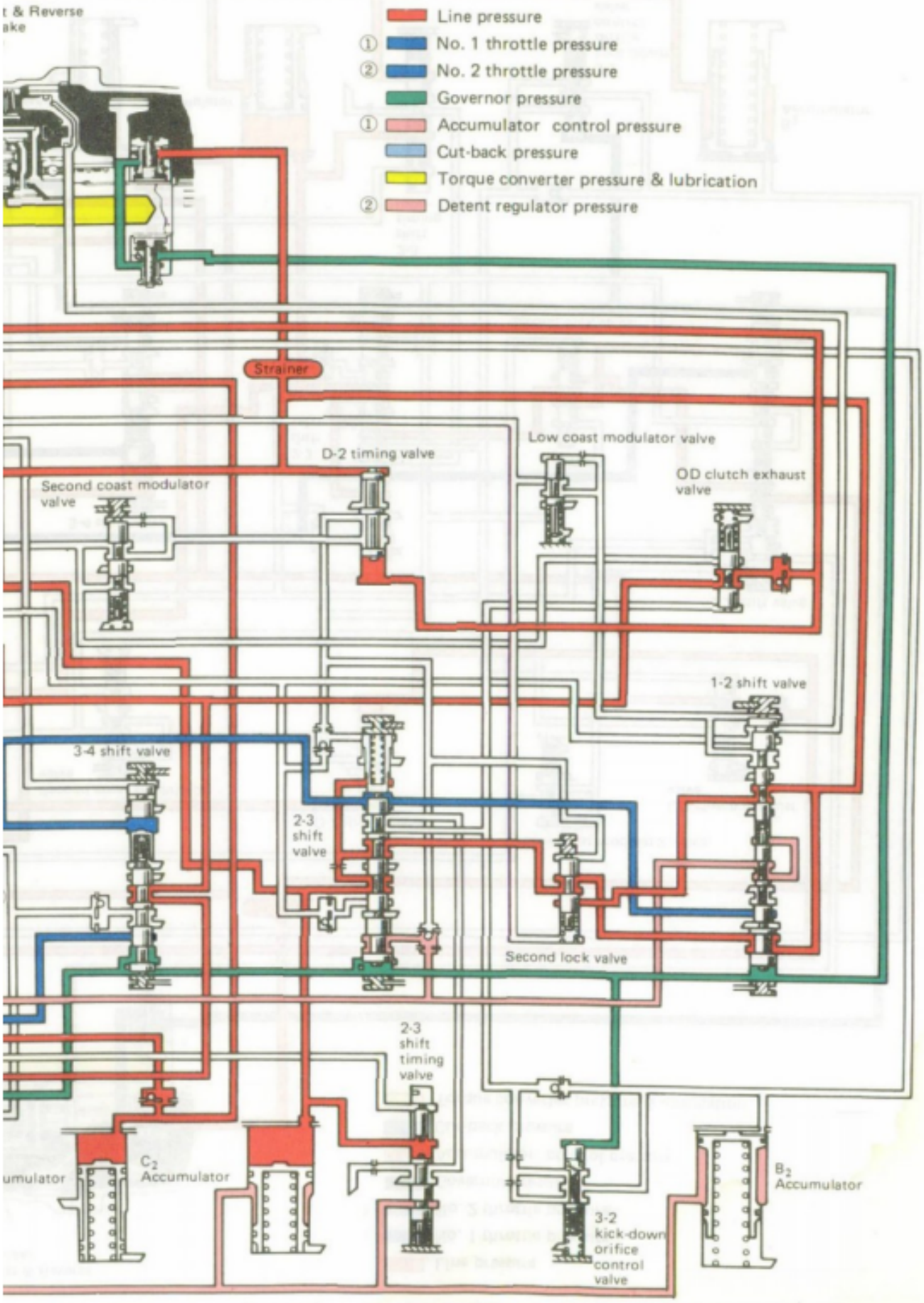

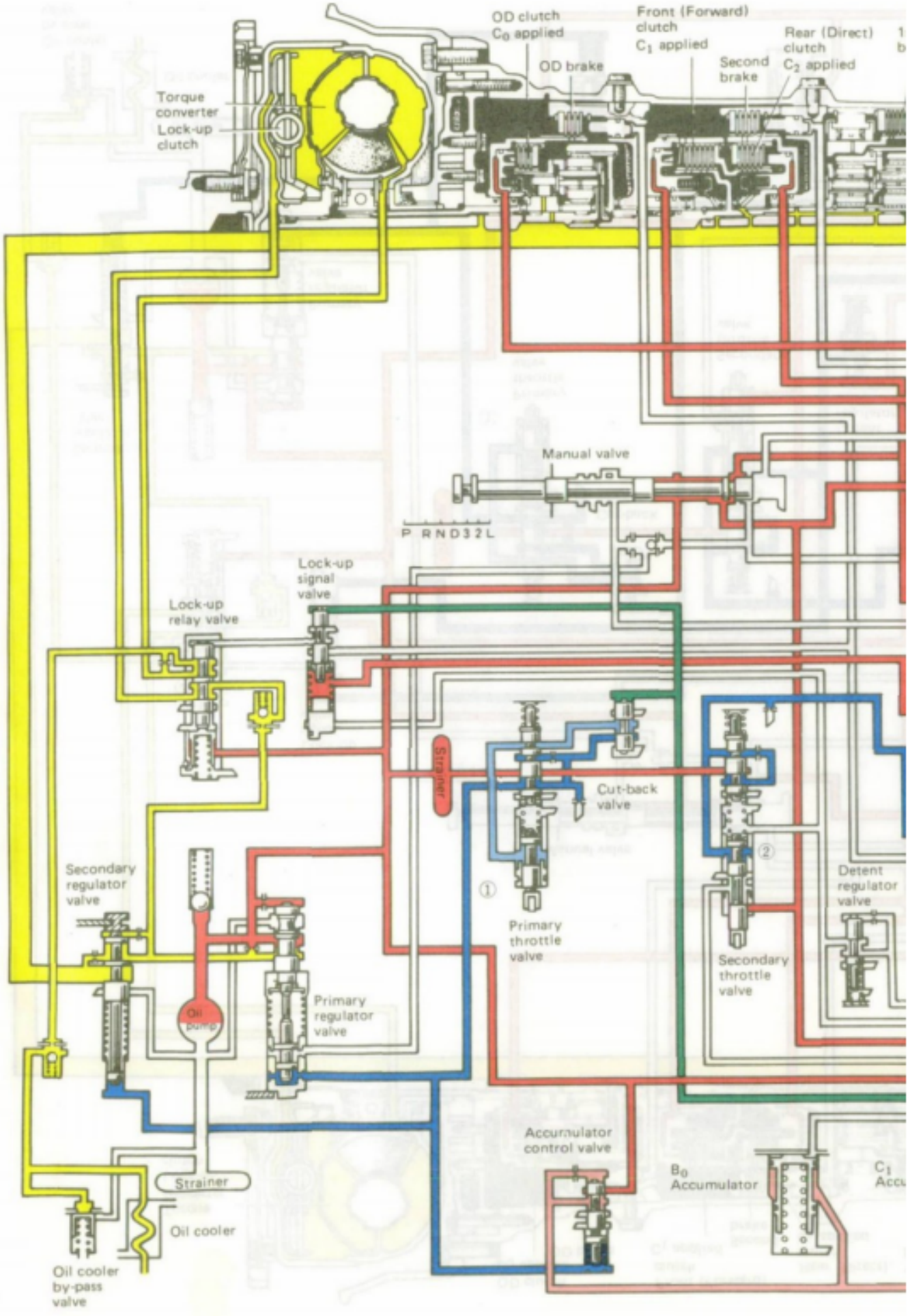
OD clutch
C_0 applied
Front (Forward) clutch
C_1 applied
Rear (Direct) clutch
C_2 applied
OD brake
Second brake
Torque converter
Lock-up clutch
Manual valve
P R N D 3 2 L
Lock-up signal valve
Lock-up relay valve
Strainer
Cut-back valve
Secondary regulator valve
Primary throttle valve
Secondary throttle valve
Detent regulator valve
Oil pump
Primary regulator valve
Accumulator control valve
B_0 Accumulator
Strainer
Oil cooler
Oil cooler by-pass valve

A440F "3" RANGE THIRD GEAR CIRCUIT

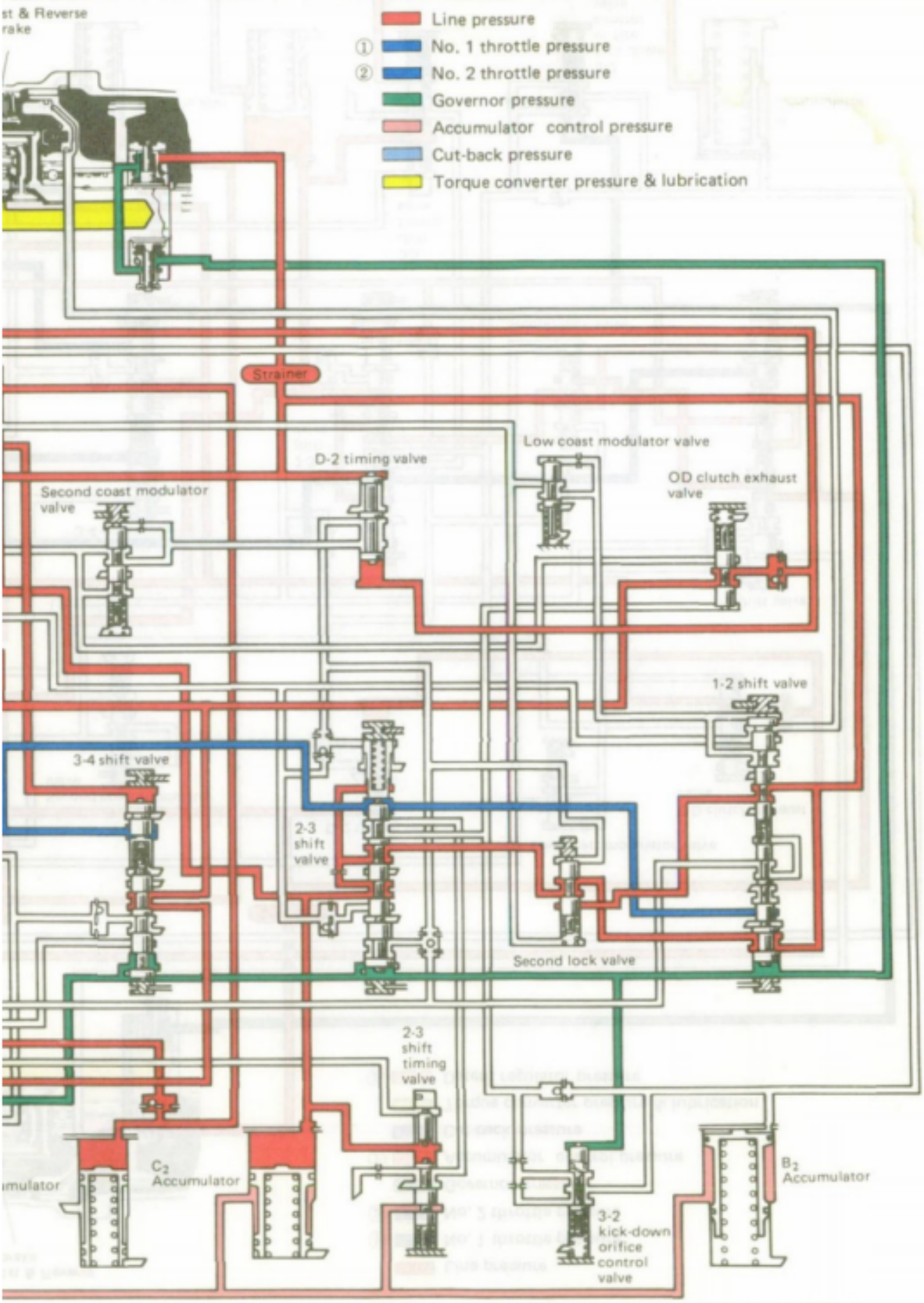

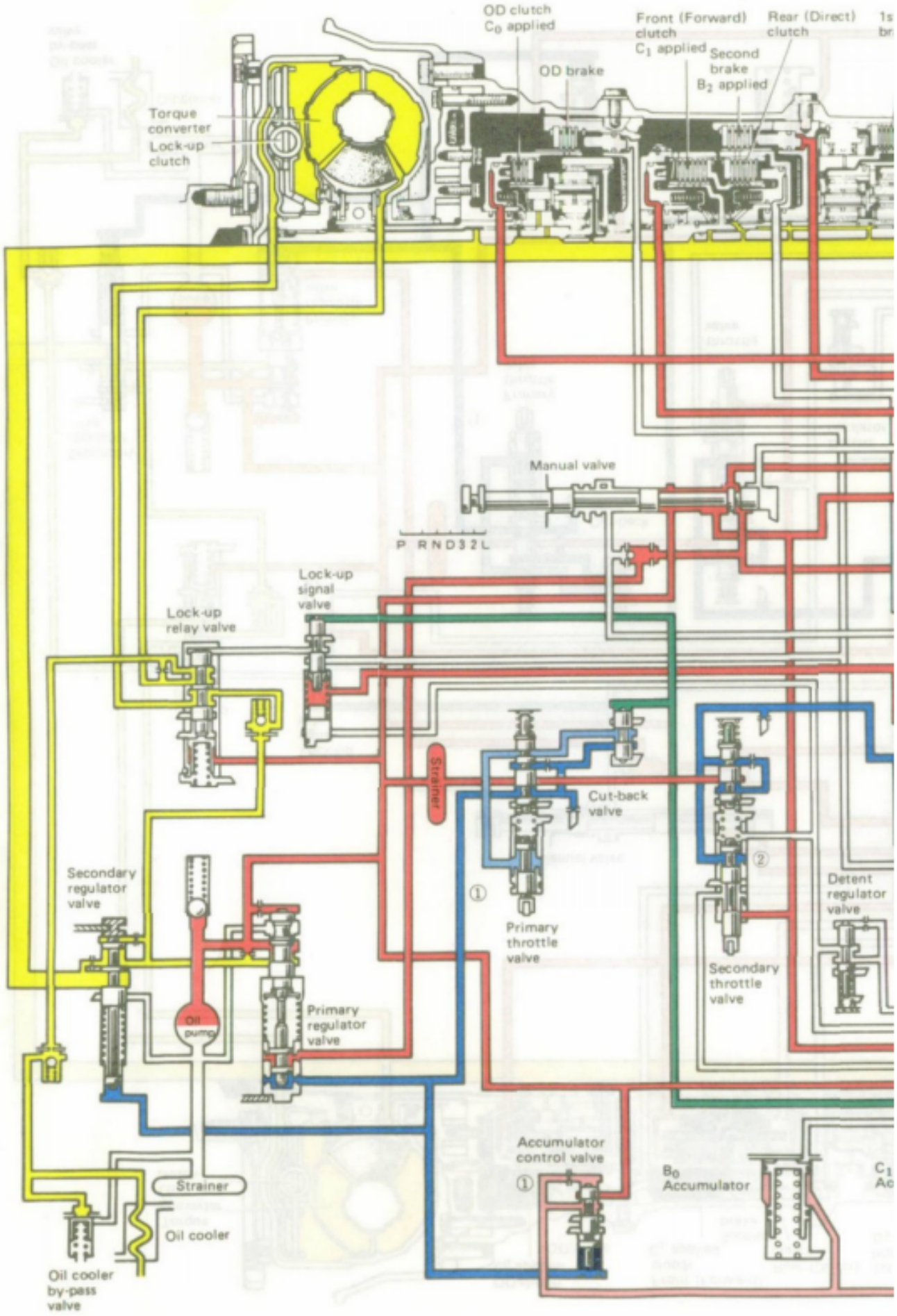
OD clutch
C_0 applied
Front (Forward) clutch
C_1 applied
Rear (Direct) clutch
OD brake
Second brake
B_2 applied
Torque converter
Lock-up clutch
Manual valve
P RND32L
Lock-up signal valve
Lock-up relay valve
Strainer
Cut-back valve
Secondary regulator valve
Primary throttle valve
Detent regulator valve
Secondary throttle valve
Oil pump
Primary regulator valve
Accumulator control valve
B_0 Accumulator
Strainer
Oil cooler
Oil cooler by-pass valve

A440F "2" RANGE SECOND GEAR CIRCUIT

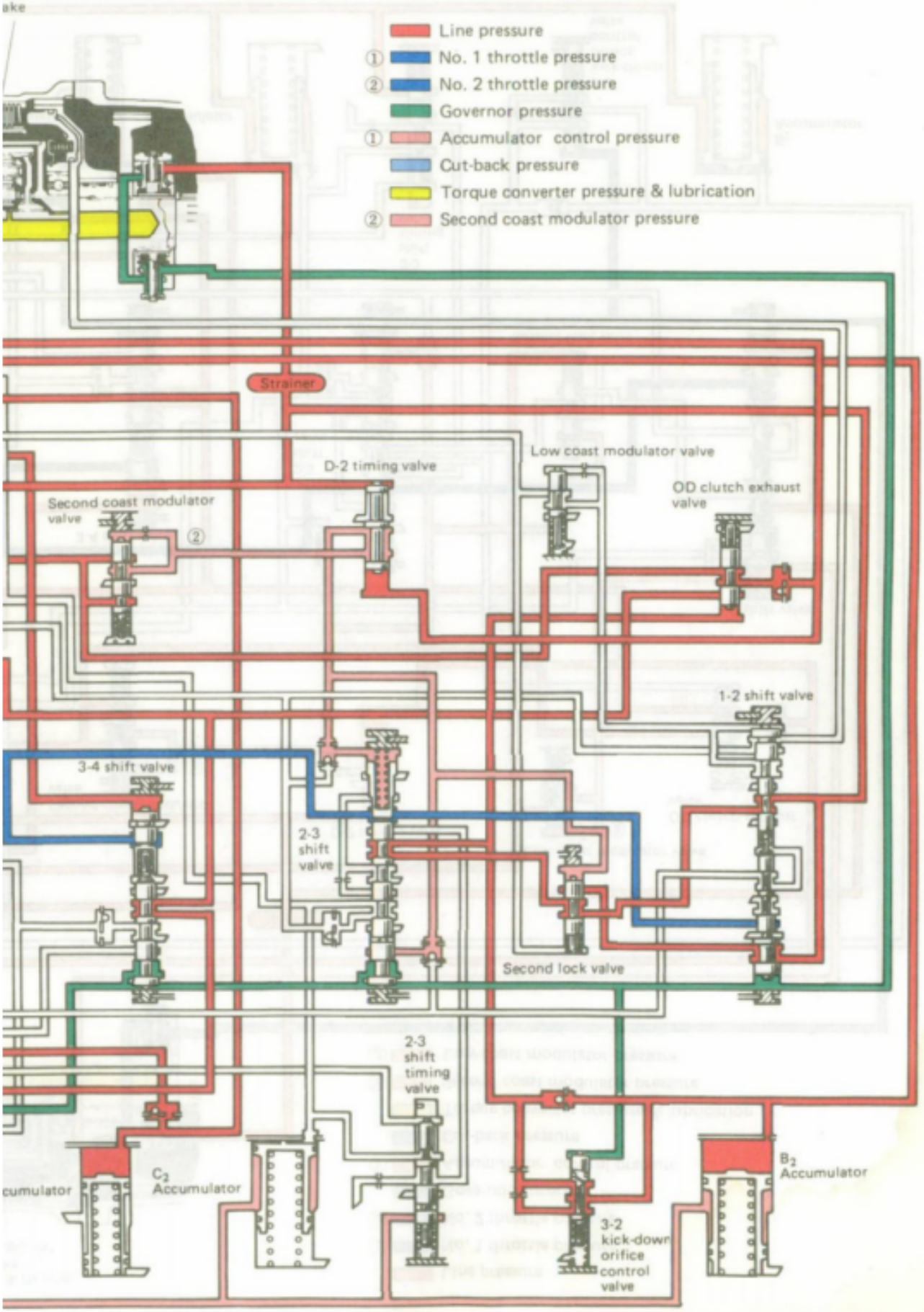

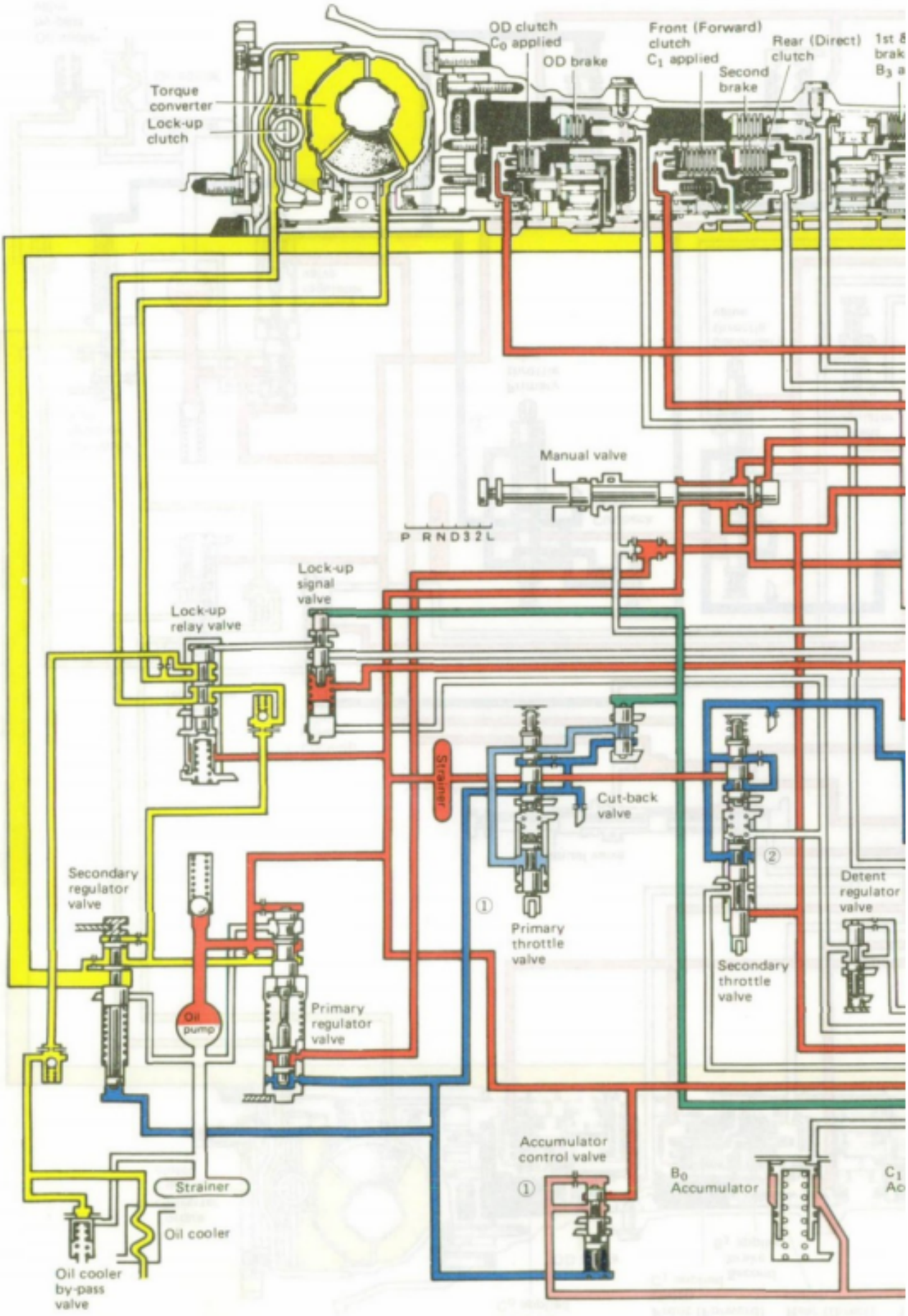
OD clutch
C_0 applied
OD brake
Front (Forward)
clutch
C_1 applied
Second
brake
Rear (Direct)
clutch
1st &
brak
B_3 a
Torque
converter
Lock-up
clutch
Manual valve
P R N D 3 2 L
Lock-up
signal
valve
Lock-up
relay valve
Strainer
Cut-back
valve
Secondary
regulator
valve
①
Primary
throttle
valve
②
Detent
regulator
valve
Secondary
throttle
valve
Oil
pump
Primary
regulator
valve
Accumulator
control valve
①
B_0
Accumulator
C_1
Ac
Strainer
Oil cooler
Oil cooler
by-pass
valve

A440F "L" RANGE FIRST GEAR CIRCUIT

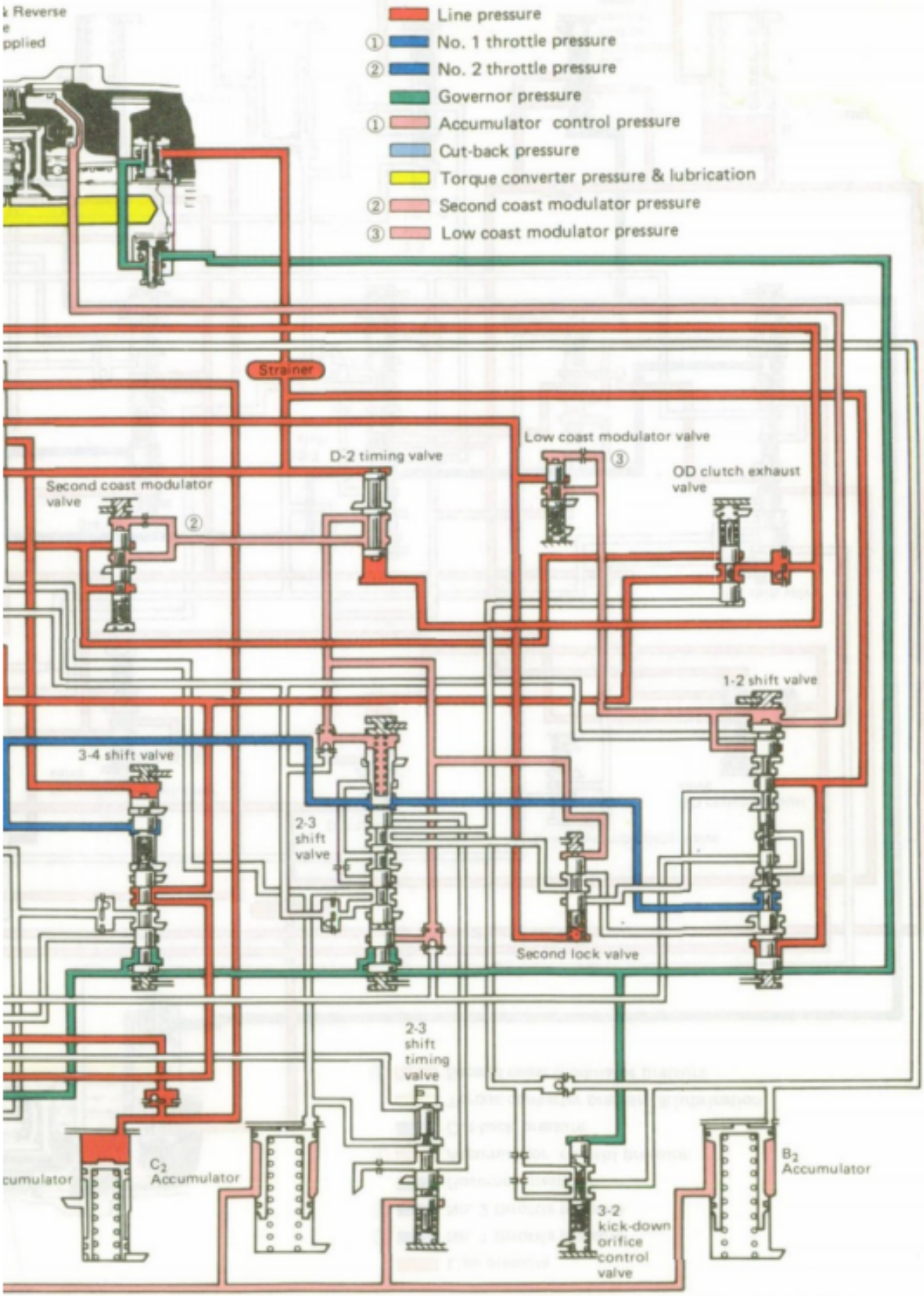

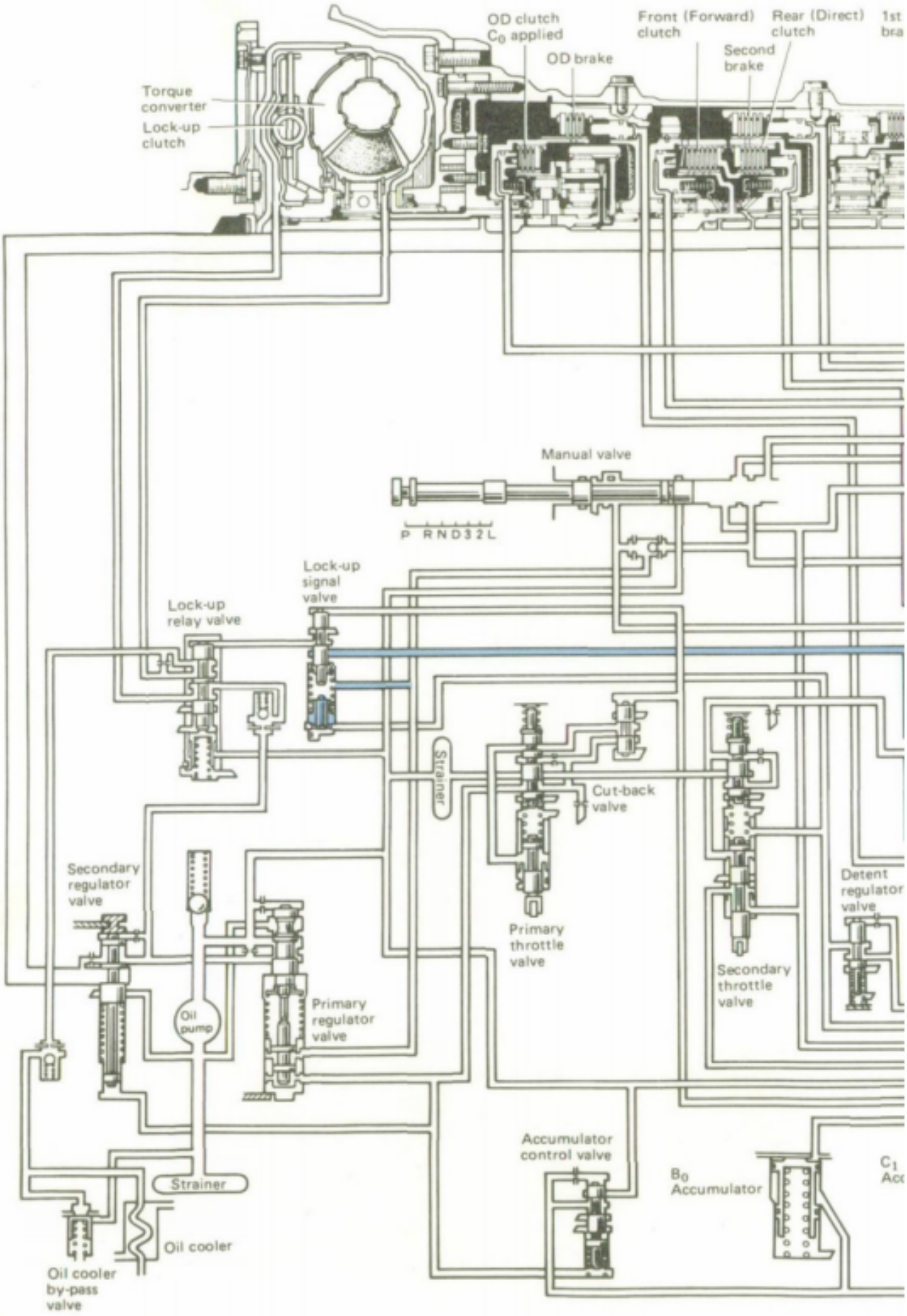
OD clutch
C_0 applied
OD brake
Front (Forward) clutch
Rear (Direct) clutch
Second brake
1st bra
Torque converter
Lock-up clutch
Manual valve
P R N D 3 2 L
Lock-up signal valve
Lock-up relay valve
Strainer
Cut-back valve
Secondary regulator valve
Primary throttle valve
Detent regulator valve
Secondary throttle valve
Oil pump
Primary regulator valve
Accumulator control valve
B_0 Accumulator
C_1 Acc
Strainer
Oil cooler
Oil cooler by-pass valve

DIFFERENCE BETWEEN THE A440L AND A440F

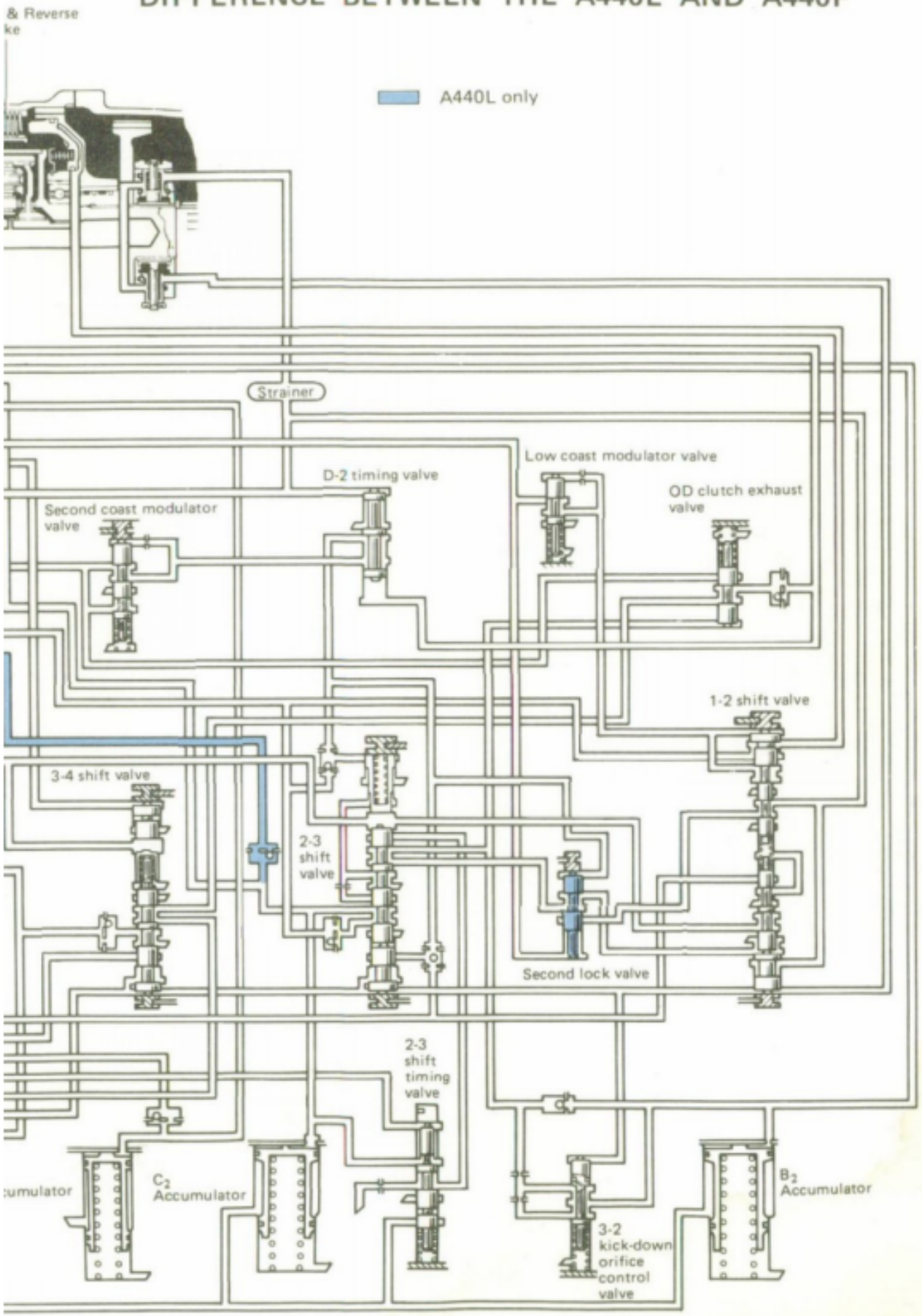

TROUBLESHOOTING

Problem	Possible cause	Remedy	Page
Hard to shift or will not shift	Splines on input shaft dirty or burred	Repair as necessary	TF-4
	Transfer faulty	Disassemble and inspect transfer	TF-4
Transfer jumps out of gear	Transfer faulty	Disassemble and inspect transfer	TF-4

ON-VEHICLE REPAIR

ON-VEHICLE REPLACEMENT OF FRONT AND REAR OIL SEALS

1. **DRAIN GEAR OIL FROM TRANSFER**

2. **REMOVE FRONT AND REAR PROPELLER SHAFTS**
(See page PR-2)

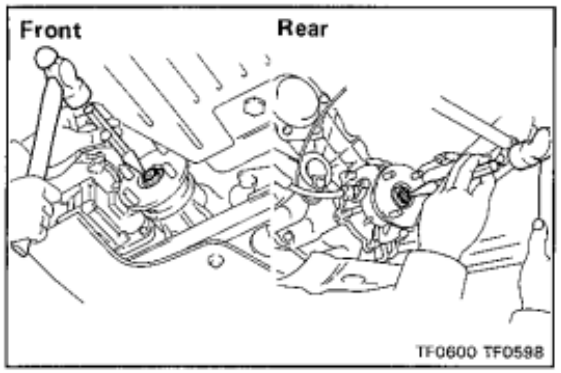

3. **REMOVE COMPANION FLANGE**
   (a) Using a hammer and chisel, loosen the staked part of the nut.

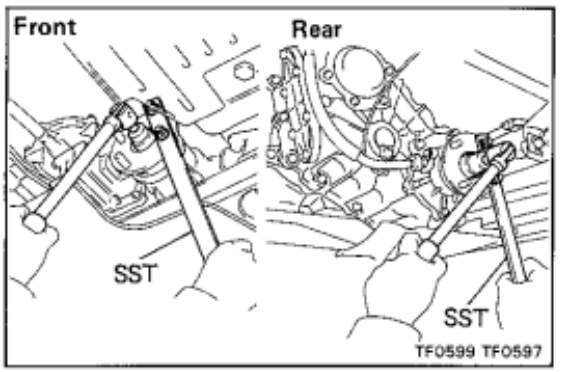

   (b) Using SST and two nuts to hold the companion flange, remove the companion flange lock nut.

   SST 09330-00021

   (c) Remove the plate washer and companion flange.

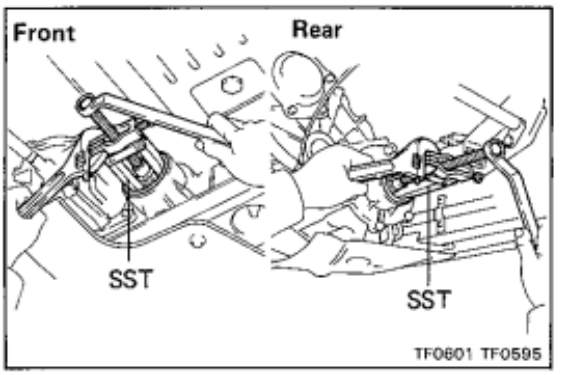

4. **REPLACE OIL SEAL**
   (a) Using SST, remove the output shaft oil seal.

   SST 09308-10010

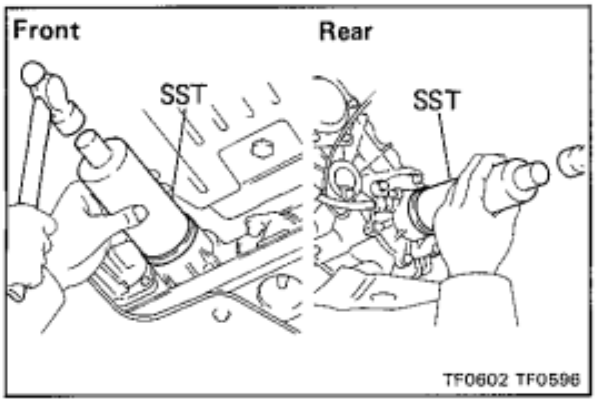

(b) Using SST and hammer, tap in a new oil seal.

SST 09316-60010 (09316-00060)

(c) Apply MP grease to the oil seal lip.

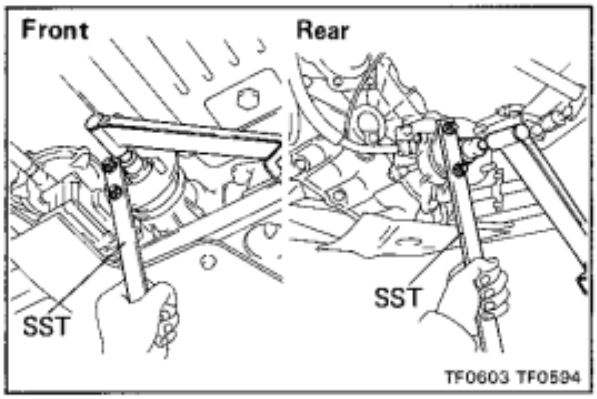

5. INSTALL COMPANION FLANGE

(a) Install the plate washer, companion flange and a new lock nut.

(b) Using SST and two nuts to hold the companion flange, torque the nut.

SST 09330-00021

Torque: 1,300 kg-cm (94 ft-lb, 127 N·m)

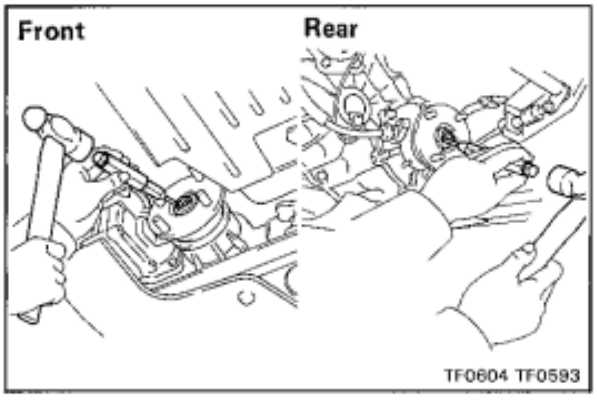

(c) Using a punch and hammer, stake the lock nut.

6. INSTALL FRONT AND REAR PROPELLER SHAFTS
(See page PR-2)

Torque: 900 kg-cm (65 ft-lb, 88 N·m)

7. FILL TRANSFER WITH OIL

Oil grade: API GL-4 or GL-5

Viscosity: SAE 90

Capacity: 2.1 liters (2.2 US qts, 1.8 Imp. qts)

REMOVAL AND INSTALLATION OF TRANSFER

(See page MT-5)

DISASSEMBLY OF TRANSFER

COMPONENTS

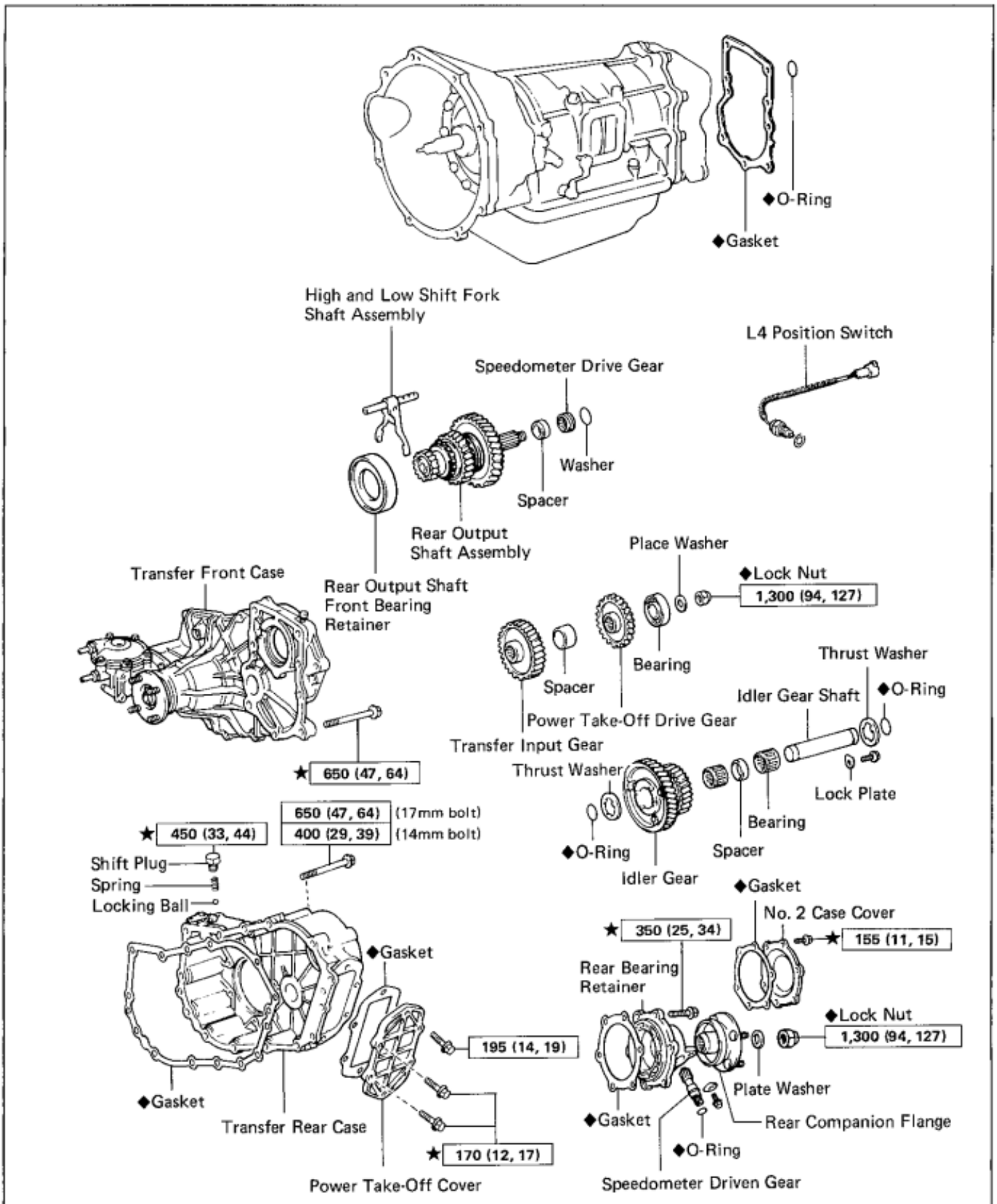

kg-cm (ft-lb, N·m) : Specified torque

◆ Non-reusable part

★ Precoated part

TF0830

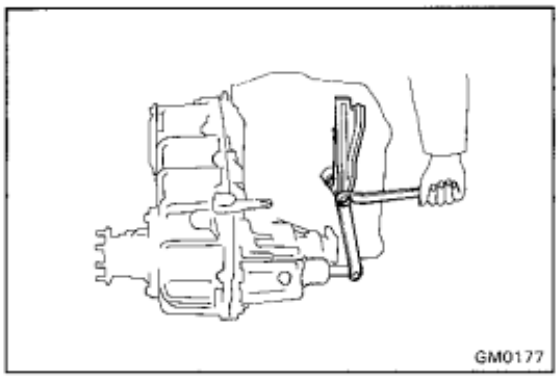

DISASSEMBLY OF TRANSFER

(See page TF-4)

1. **(DIRECT SHIFT TYPE)**
   REMOVE TRANSFER FRONT DRIVE SHIFT LEVER
   (a) Remove the drive shift lever from transfer.
   (b) Remove the dust boot.

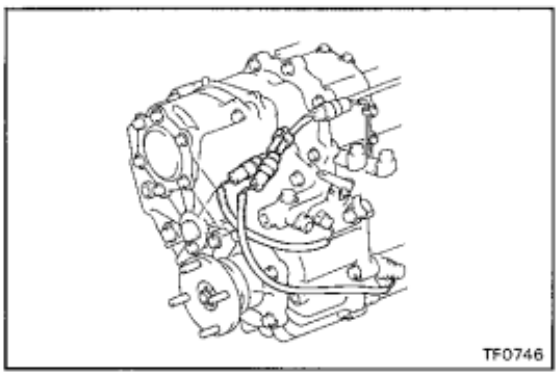

(VACUUM SHIFT TYPE)
REMOVE TRANSFER L4 POSITION SWITCH
(a) Disconnect the two connectors.

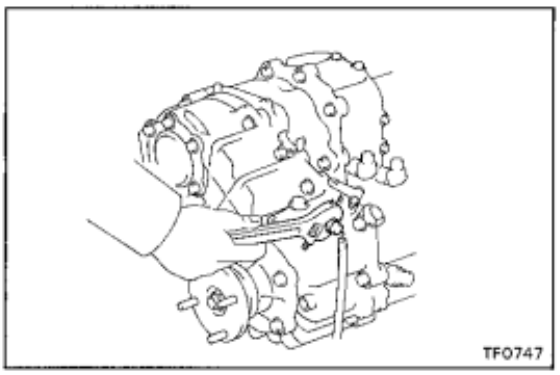

(b) Remove the transfer L4 position switch.

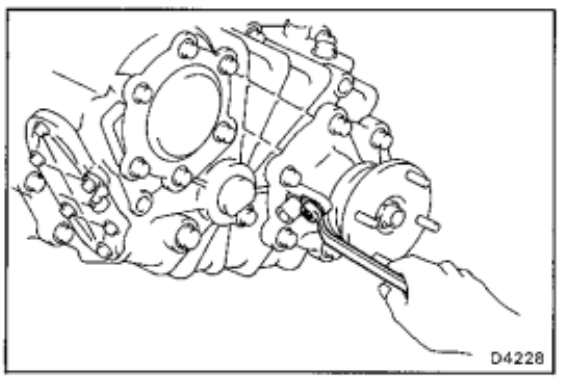

2. **REMOVE SPEEDOMETER DRIVEN GEAR**
   (a) Remove the bolt and lock plate.

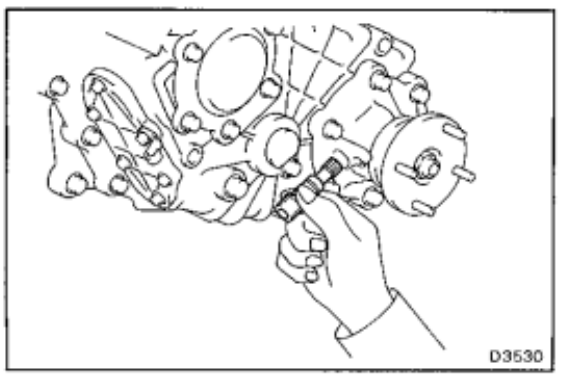

(b) Remove the speedometer driven gear.
(c) Remove the O-ring from the speedometer driven gear.

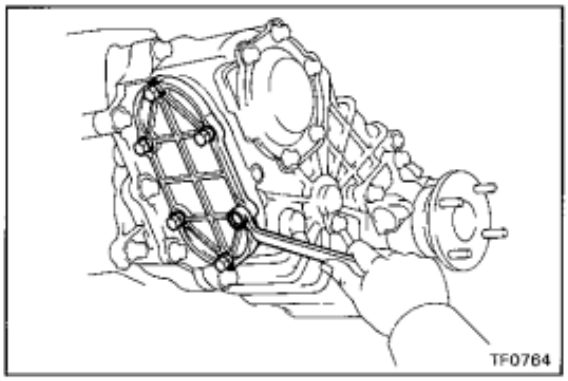

3. REMOVE POWER TAKE-OFF COVER

Remove the six bolts, and remove the power take- off cover and gasket.

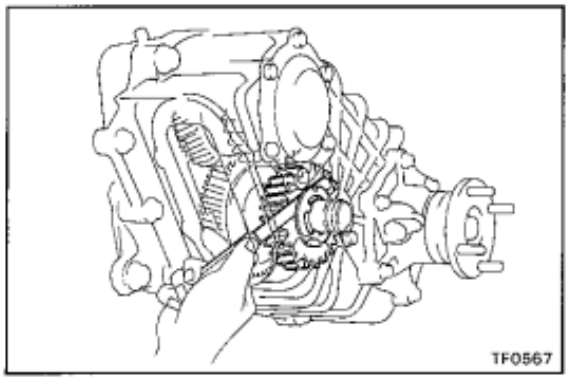

4. INSPECT IDLER GEAR THRUST CLEARANCE

Using a feeler gauge, measure the clearance between the idler gear and thrust washer.

Standard clearance: **0.275 — 0.625 mm (0.0110 — 0.0246 in.)**

Maximum clearance: **0.625 mm (0.0264 in.)**

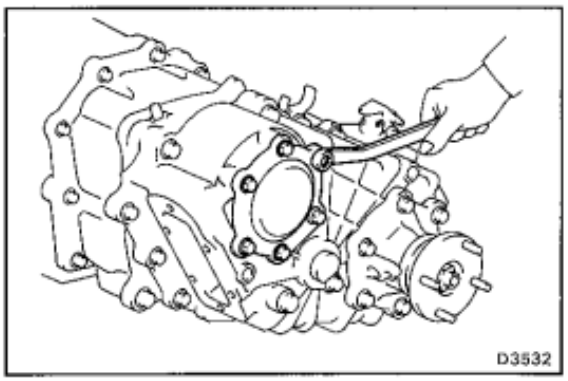

5. REMOVE TRANSFER NO.2 CASE COVER

Remove the six bolts, and remove transfer No.2 case cover and gasket.

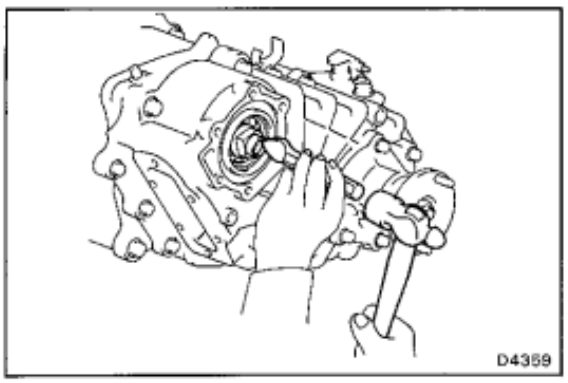

6. REMOVE TRANSMISSION OUTPUT SHAFT LOCK NUT

(a) Using a hammer and chisel, loosen the staked part of the nut.

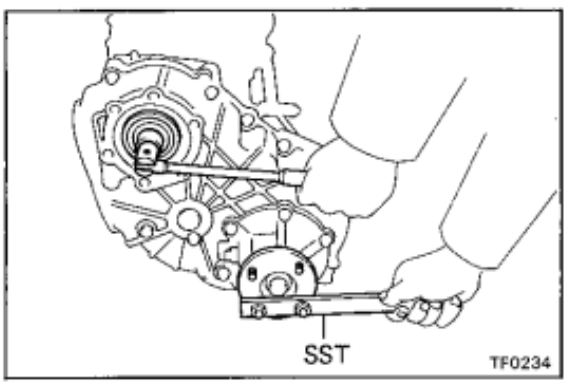

(b) Shift the outer lever of the transfer high and low shift lever to H2 or L4 position.

(c) Using SST and two nuts to hold the rear companion flange, remove the transmission output shaft lock nut and plate washer.

SST 09330-00021

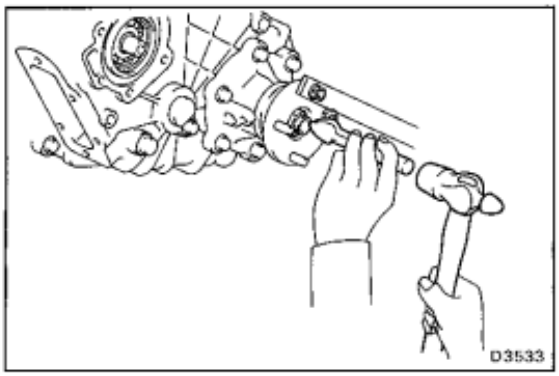

7. REMOVE REAR COMPANION FLANGE

(a) Using a hammer and chisel, loosen the staked part of the nut.

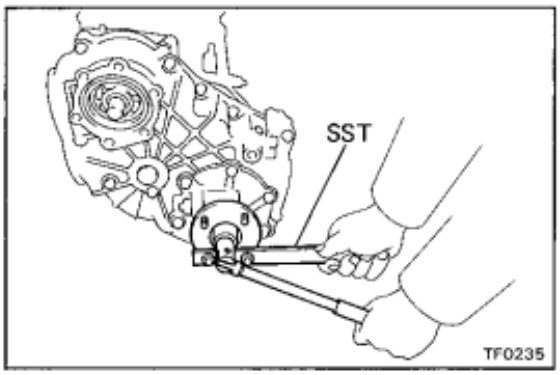

(b) Using SST and two nuts to hold the rear companion flange, remove the companion flange lock nut.

SST 09330-00021

(c) Remove the plate washer and companion flange.

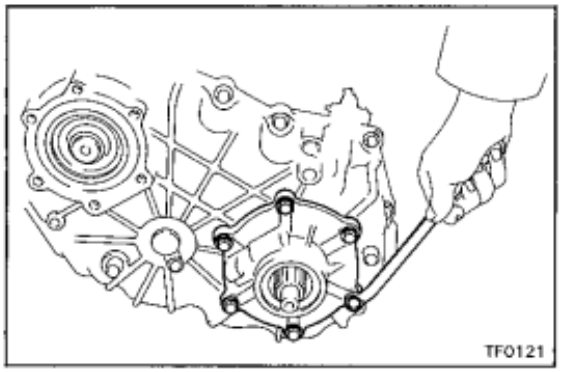

8. REMOVE REAR OUTPUT SHAFT REAR BEARING RETAINER

Remove the six bolts, and remove the rear output shaft bearing retainer and gasket.

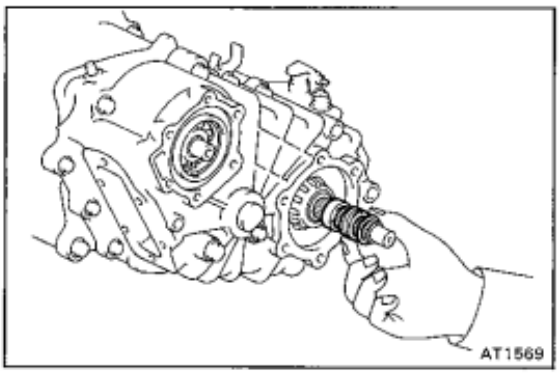

9. REMOVE WASHER, SPEEDOMETER DRIVE GEAR AND SPACER

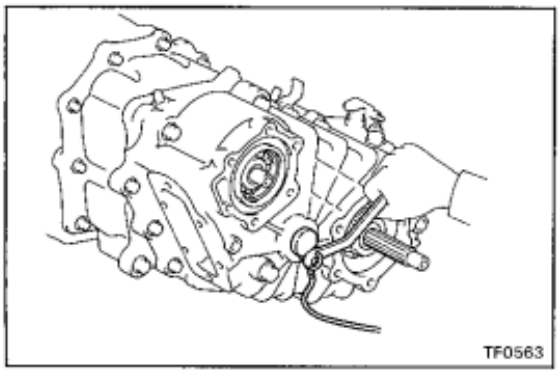

10. REMOVE IDLER GEAR SHAFT LOCK PLATE

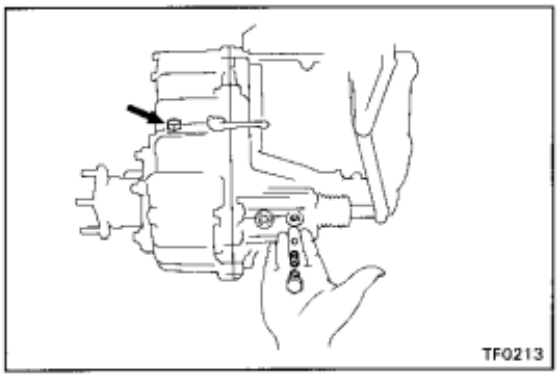

11. REMOVE SHIFT PLUGS, SPRINGS AND LOCKING BALLS [Direct Shift Type]

Remove the shift plugs and, using a magnetic finger, remove the springs and locking balls.

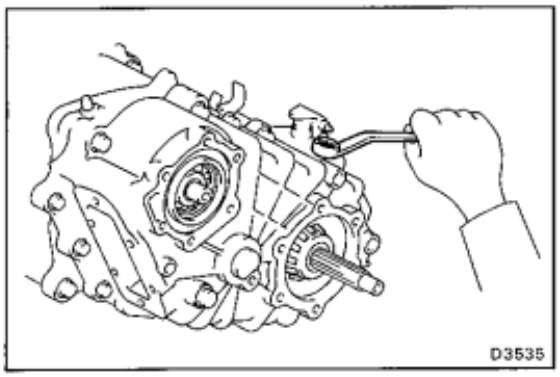

[Vacuum Shift Type]

Remove the shift plug, and using a magnetic finger, remove the spring and locking ball.

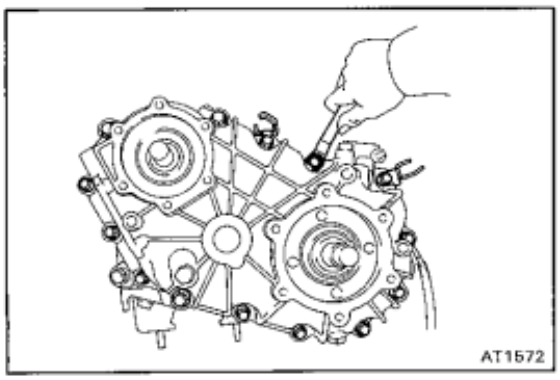

12. REMOVE TRANSFER REAR CASE

(a) Remove the fourteen bolts.

(b) Using a plastic hammer, remove the transfer rear case.

(c) Remove the gasket from the transfer rear case.

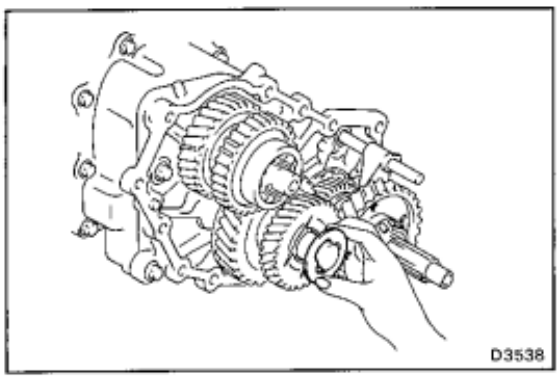

(d) Remove the thrust washer from the idler gear shaft.

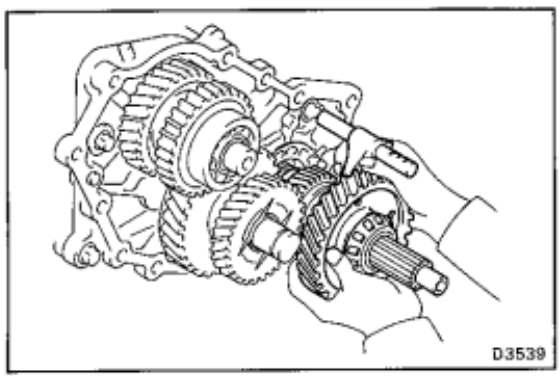

13. REMOVE REAR OUTPUT SHAFT ASSEMBLY WITH HIGH AND LOW SHIFT FORK SHAFT ASSEMBLY

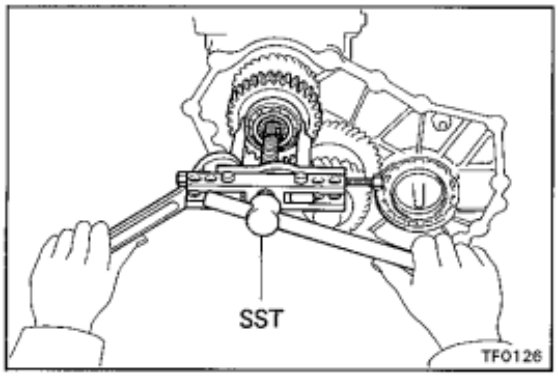

14. REMOVE POWER TAKE-OFF DRIVE GEAR

(a) Using SST, remove the transfer input gear bearing.

SST 09950-20017

(b) Remove the power take-off drive gear.

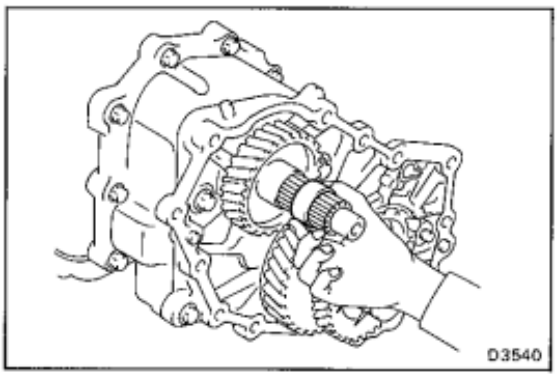

(c) Remove the spacer.

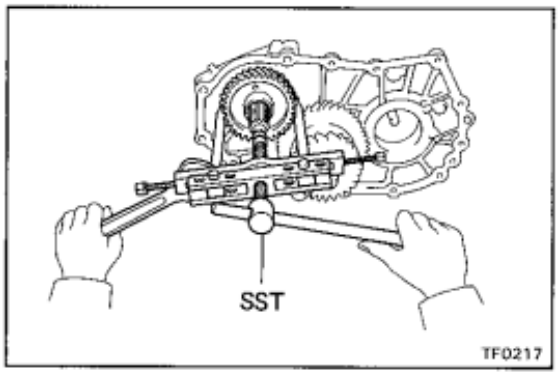

15. REMOVE TRANSFER INPUT GEAR

Using SST, remove the transfer input gear.

SST 09950-20017

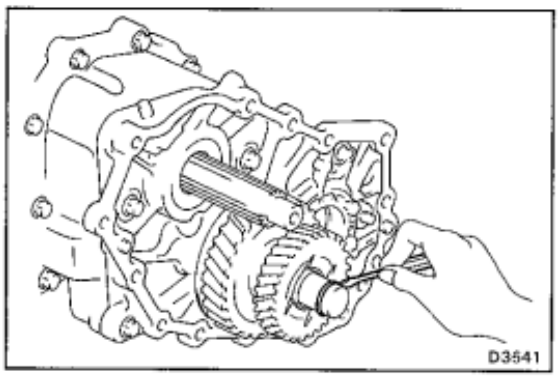

16. REMOVE IDLER GEAR AND IDLER GEAR SHAFT

(a) Remove the O-ring from the idler gear shaft.

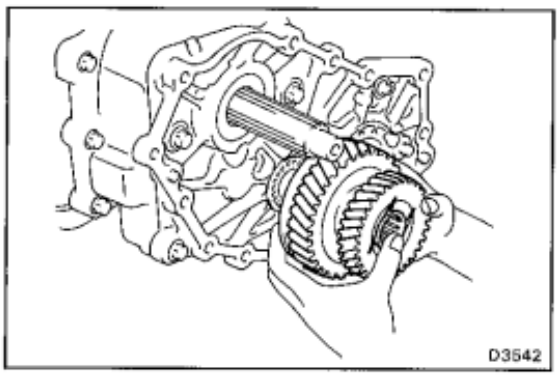

(b) Remove the idler gear with the two bearings and spacer.

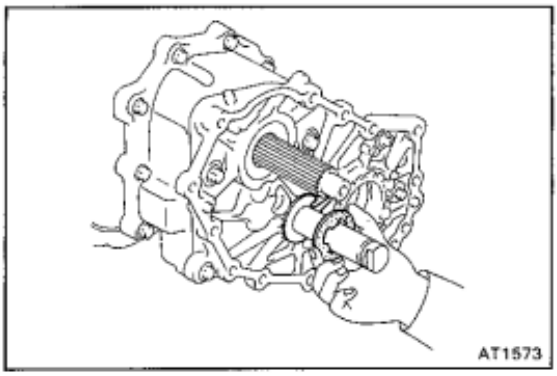

(c) Remove the thrust washer from idler gear shaft.

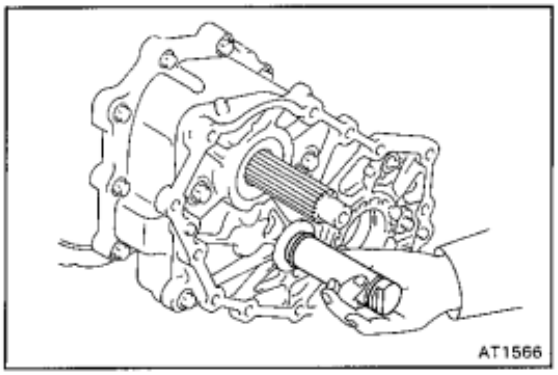

(d) Remove the idler gear shaft.

(e) Remove the O-ring from the idler gear shaft.

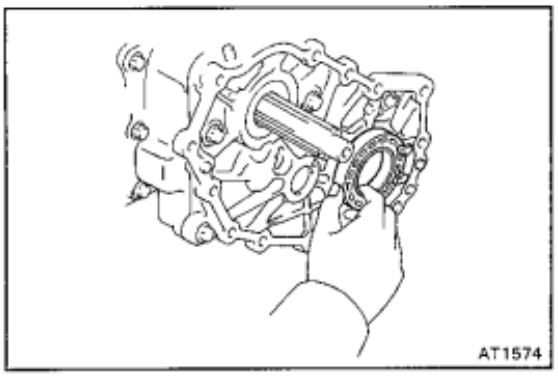

17. REMOVE REAR OUTPUT SHAFT FRONT BEARING RETAINER

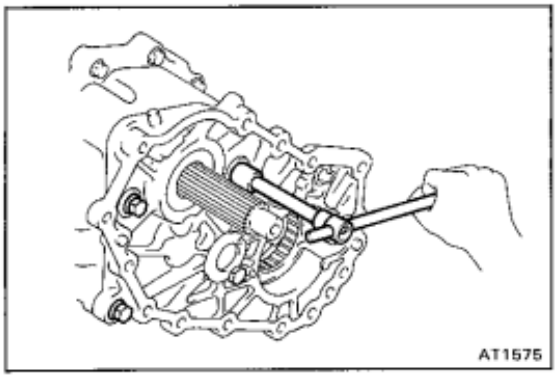

18. REMOVE TRANSFER FRONT CASE

(a) Remove the four bolts and using a plastic hammer, remove the transfer front case.

(b) Remove the gasket.

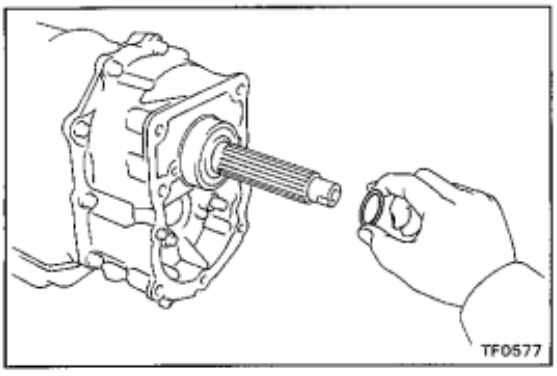

19. REMOVE O-RING FROM TRANSMISSION OUTPUT SHAFT

COMPONENT PARTS

Rear Output Shaft Assembly

COMPONENTS

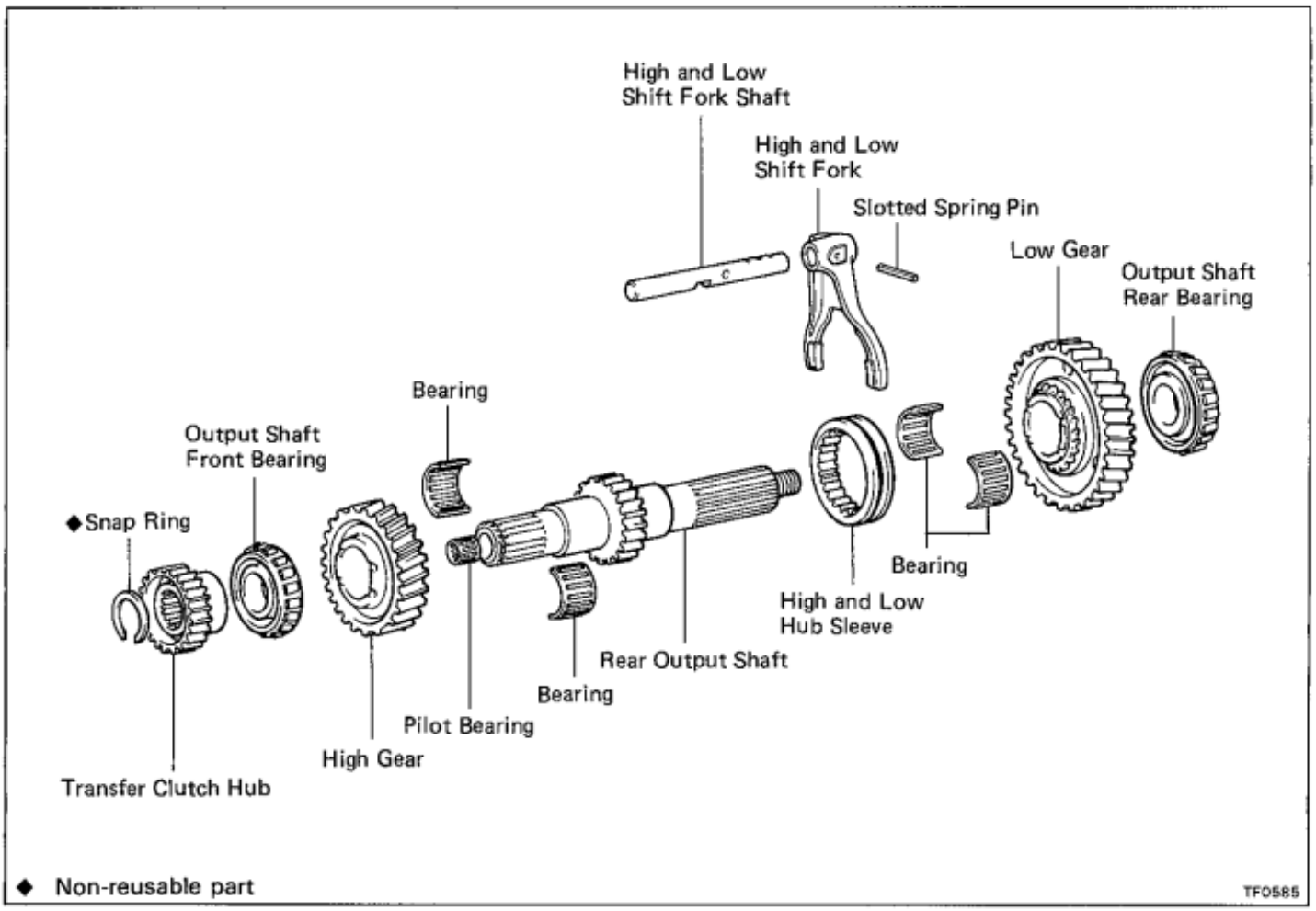

◆ Non-reusable part

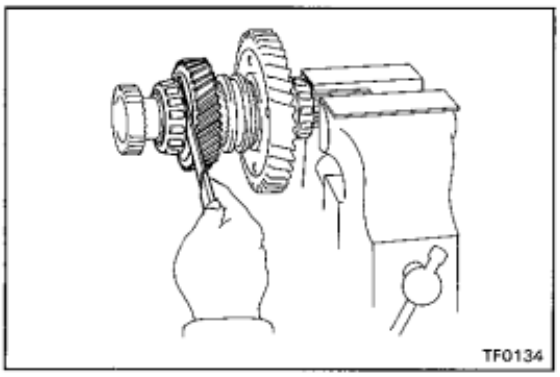

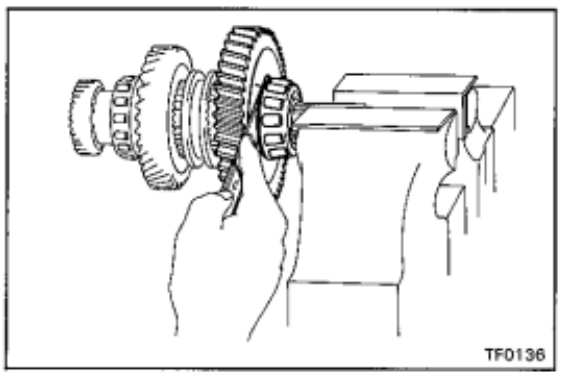

DISASSEMBLY OF REAR OUTPUT SHAFT ASSEMBLY

1. **INSPECT THRUST CLEARANCES OF HIGH AND LOW GEARS**

   (a) Using a feeler gauge, measure the thrust clearance between the high gear and bearing.

   Standard clearance: 0.10 — 0.25 mm (0.0039 — 0.0098 in.)

   (b) Using a feeler gauge, measure the thrust clearance between the low gear and bearing.

   Standard clearance: 0.10 — 0.25 mm (0.0039 — 0.0098 in.)

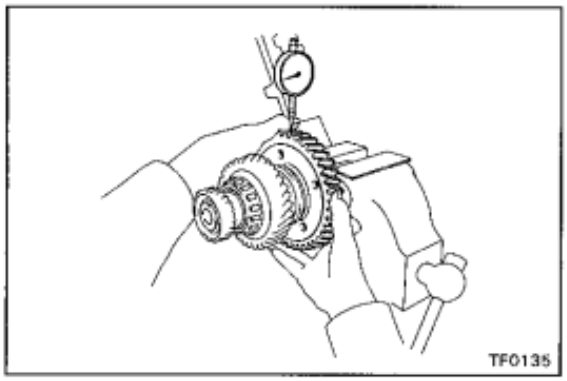

2. INSPECT OIL CLEARANCES OF LOW AND HIGH GEARS

(a) Using a dial indicator, measure oil clearance between the low gear and shaft with the needle roller bearing installed.

Standard clearance: **0.019 — 0.068 mm (0.0007 — 0.0027 in.)**

Maximum clearance: **0.068 mm (0.0027 in.)**

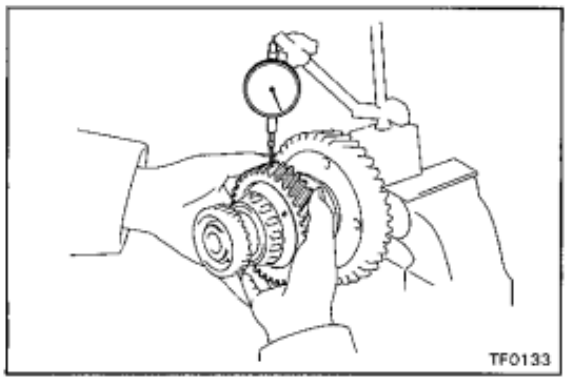

(b) Using a dial indicator, measure oil clearance between the high gear and shaft with the needle roller bearing installed.

Standard clearance: **0.019 — 0.068 mm (0.0007 — 0.0027 in.)**

Maximum clearance: **0.068 mm (0.0027 in.)**

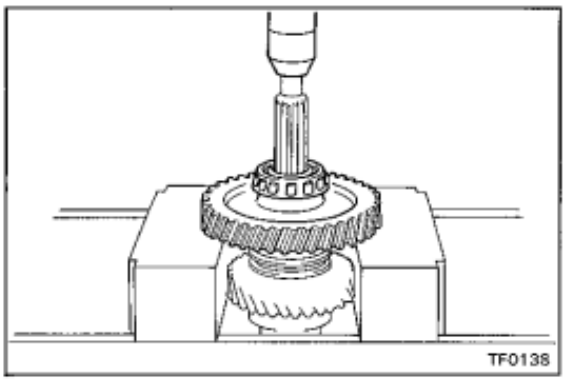

3. REMOVE LOW GEAR, AND HIGH AND LOW CLUTCH HUB SLEEVE

(a) Using a press, press out the output shaft rear bearing and low gear.

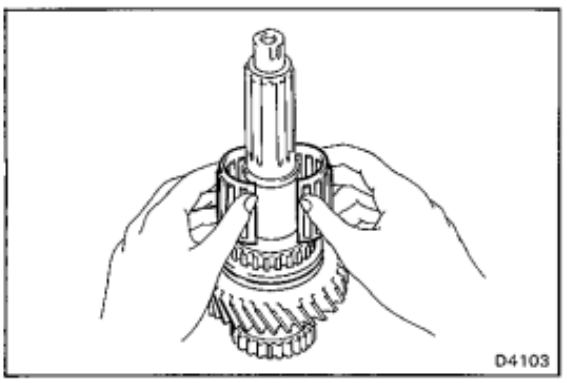

(b) Remove low gear bearings from the rear output shaft.

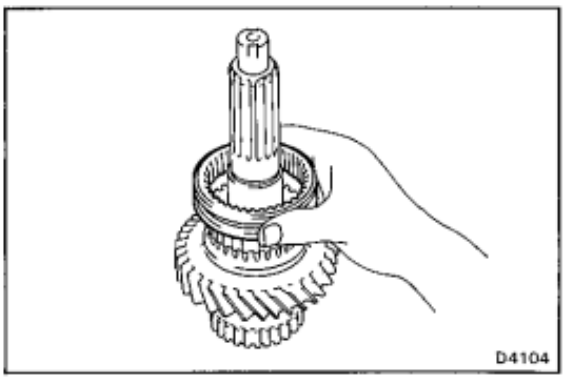

(c) Remove the high and low hub sleeve.

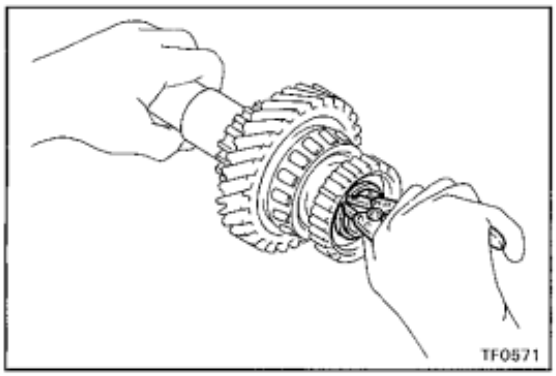

4. REMOVE TRANSFER CLUTCH HUB AND HIGH GEAR

(a) Using snap ring pliers, remove the snap ring.

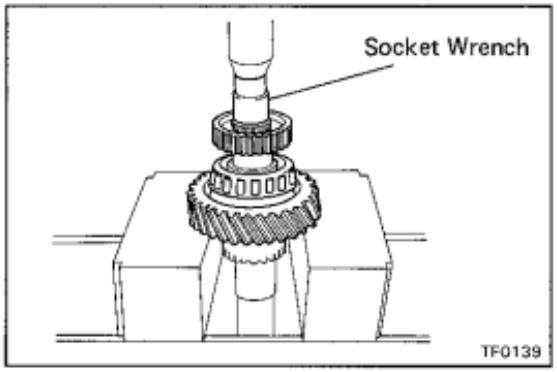

(b) Using a press and socket wrench, press out the transfer clutch hub, output shaft front bearing and high gear.

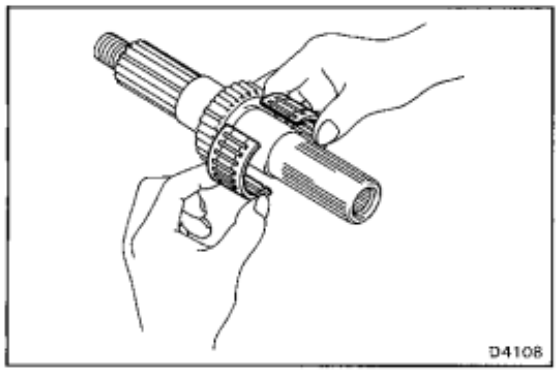

(c) Remove the high gear bearings from the rear output shaft.

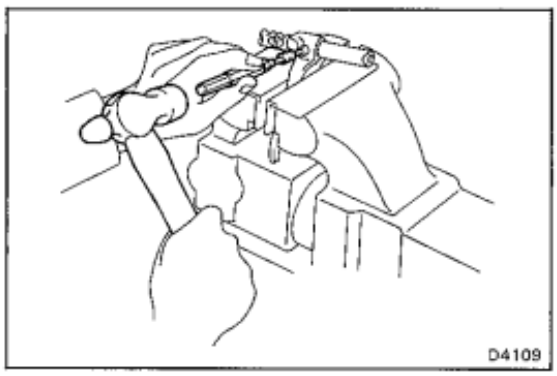

5. REMOVE HIGH AND LOW SHIFT FORK SHAFT

(a) Mount the high and low shift fork in a soft jaw vise.

(b) Using a pin punch and hammer, tap out the slotted spring pin.

(c) Remove the shift fork shaft from the shift fork.

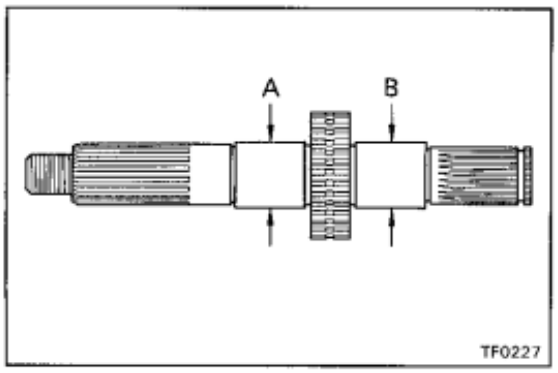

INSPECTION OF REAR OUTPUT SHAFT ASSEMBLY COMPONENTS

1. INSPECT REAR OUTPUT SHAFT

(a) Check the rear output shaft for wear or damage.

(b) Using a micrometer, measure the outer diameter of the rear output shaft journal surface.

Minimum outer diameter:

Part A 40.009 mm (1.5752 in.)
B 40.009 mm (1.5752 in.)

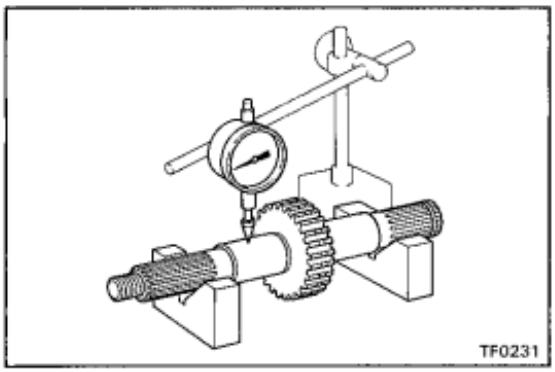

(c) Place the rear output shaft on V-blocks.

(d) Using a dial indicator, measure the shaft runout.

Maximum runout: 0.03 mm (0.0012 in.)

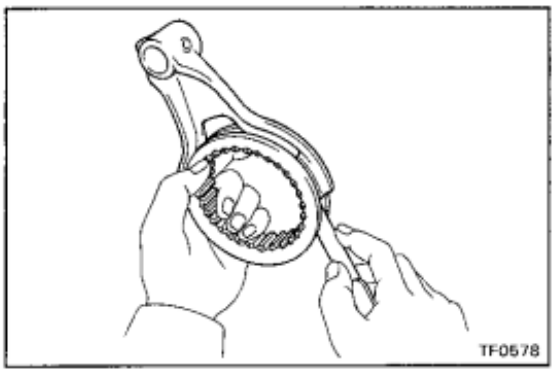

2. INSPECT CLEARANCE OF SHIFT FORK AND HUB SLEEVE

Using a feeler gauge, measure the clearance between the hub sleeves and shift fork.

Maximum clearance: 1.0 mm (0.039 in.)

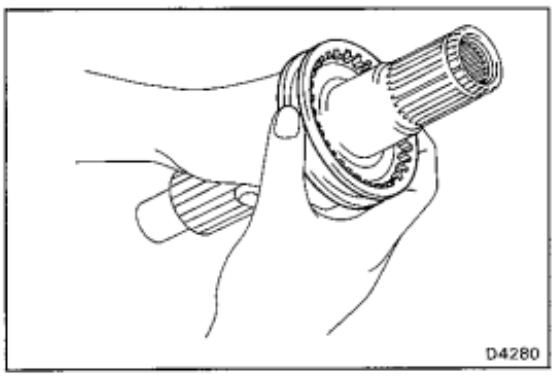

3. INSPECT HIGH AND LOW HUB SLEEVE

(a) Install the hub sleeve to the rear output shaft.

(b) Check that the hub sleeve moves smoothly.

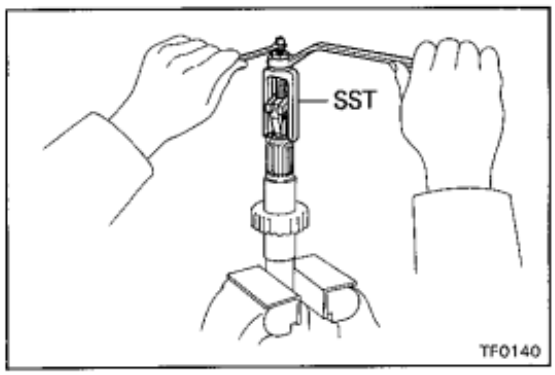

4. IF NECESSARY, REPLACE REAR OUTPUT SHAFT PILOT BEARING

(a) Using SST, remove the rear output shaft pilot bearing.

SST 09319-60020

HINT: The bearing will break.

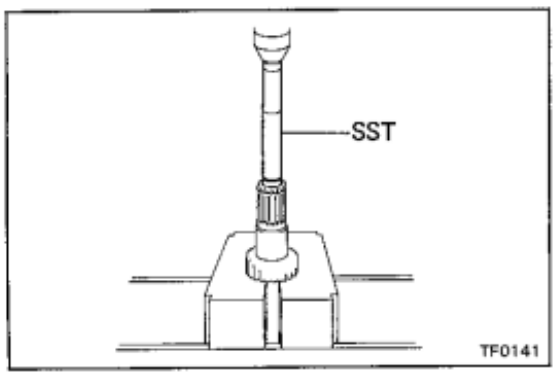

(b) Using SST and a press, press in a new pilot bearing.

SST 09608-20012 (09608-03020)

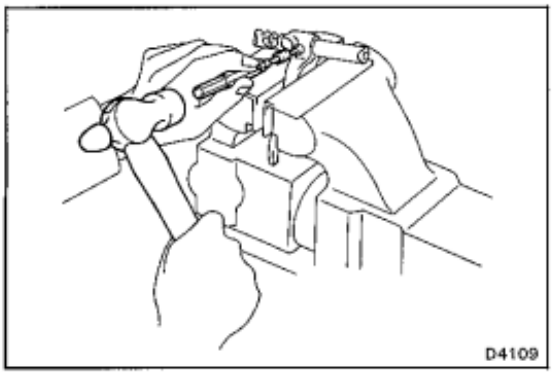

ASSEMBLY OF REAR OUTPUT SHAFT ASSEMBLY

1. INSTALL HIGH AND LOW SHIFT FORK SHAFT

(a) Mount the high and low shift fork in a soft jaw vise.

(b) Install the shift fork shaft into the shift fork.

(c) Using a pin punch and hammer, tap in the slotted spring pin.

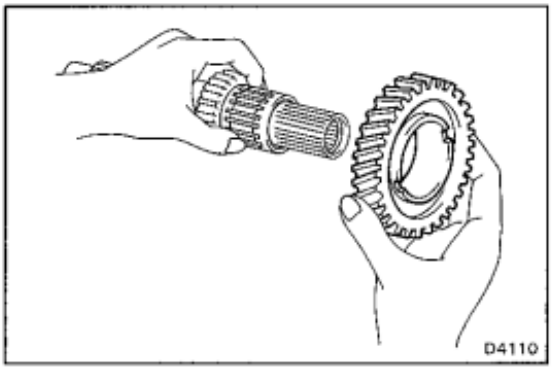

2. INSTALL HIGH GEAR AND TRANSFER CLUTCH HUB

(a) Apply MP grease to the high gear bearings.

(b) Install high gear bearings and high gear.

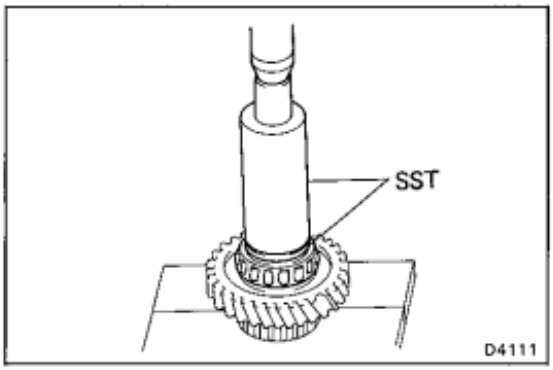

(c) Using SST and a press, press in the output shaft front bearing.

SST 09316-60010 (09316-00010, 09316-00070)

HINT: Replace both the bearing and the outer race as a set.

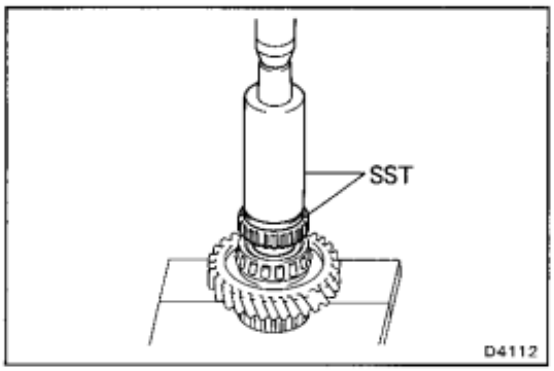

(d) Using SST and a press, press in the clutch hub.

SST 09316-60010 (09316-00010, 09316-00070)

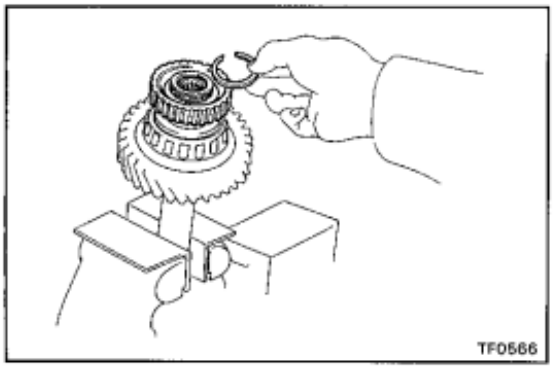

3. INSTALL SNAP RING

(a) Select a snap ring that will allow minimum axial play.

Mark	Thickness mm (in.)
11	2.30 — 2.35 (0.0906 — 0.0925)
17	2.60 — 2.65 (0.1024 — 0.1043)

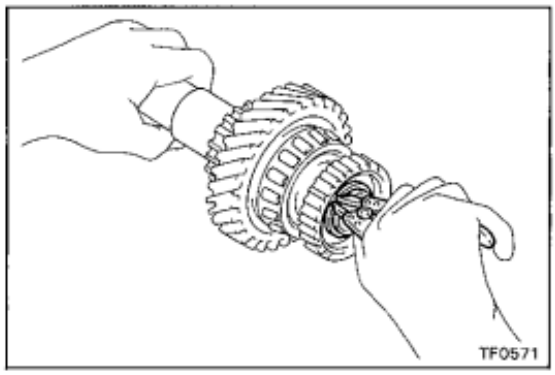

(b) Using snap ring pliers, install a new snap ring.

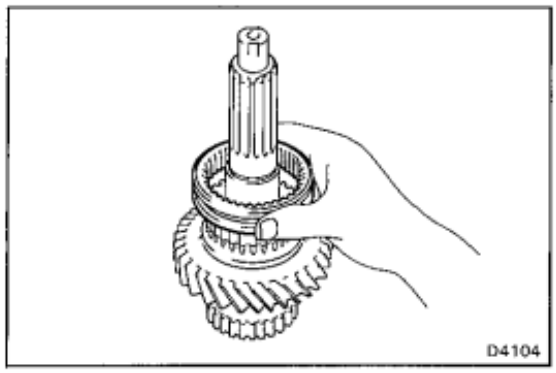

4. INSTALL LOW GEAR TO REAR OUTPUT SHAFT

(a) Install the high and low hub sleeve.

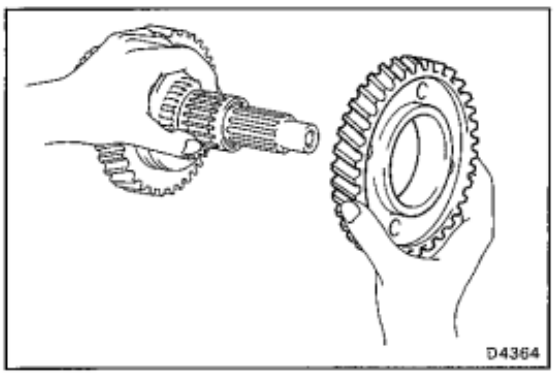

(b) Apply MP grease to the low gear bearings.

(c) Install low gear bearings and low gear.

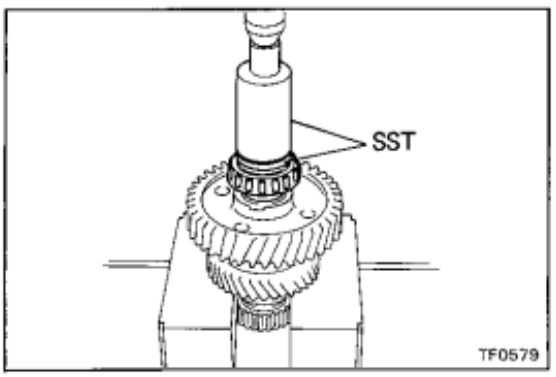

(d) Using SST and a press, press in the output shaft rear bearing.

SST 09316-60010 (09316-00010, 09316-00070)

HINT: Replace both the bearing and the outer race as a set.

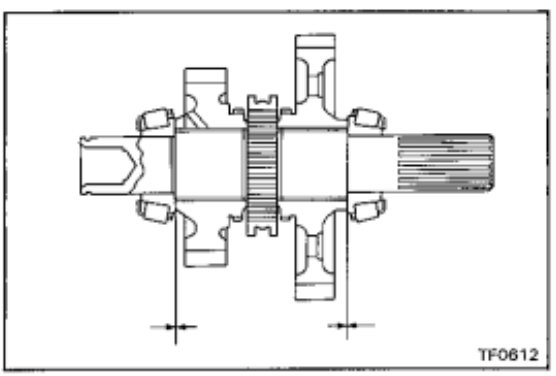

5. INSPECT THRUST CLEARANCES OF HIGH AND LOW GEARS

(a) Using a feeler gauge, measure the thrust clearance between the high gear and bearing.

Standard clearance: 0.10 — 0.25 mm (0.0039 — 0.0098 in.)

Maximum clearance: 0.25 mm (0.0098 in.)

(b) Using a feeler gauge, measure the thrust clearance between the low gear and bearing.

Standard clearance: 0.10 — 0.25 mm (0.0039 — 0.0098 in.)

Maximum clearance: 0.25 mm (0.0098 in.)

Idler Gear

COMPONENTS

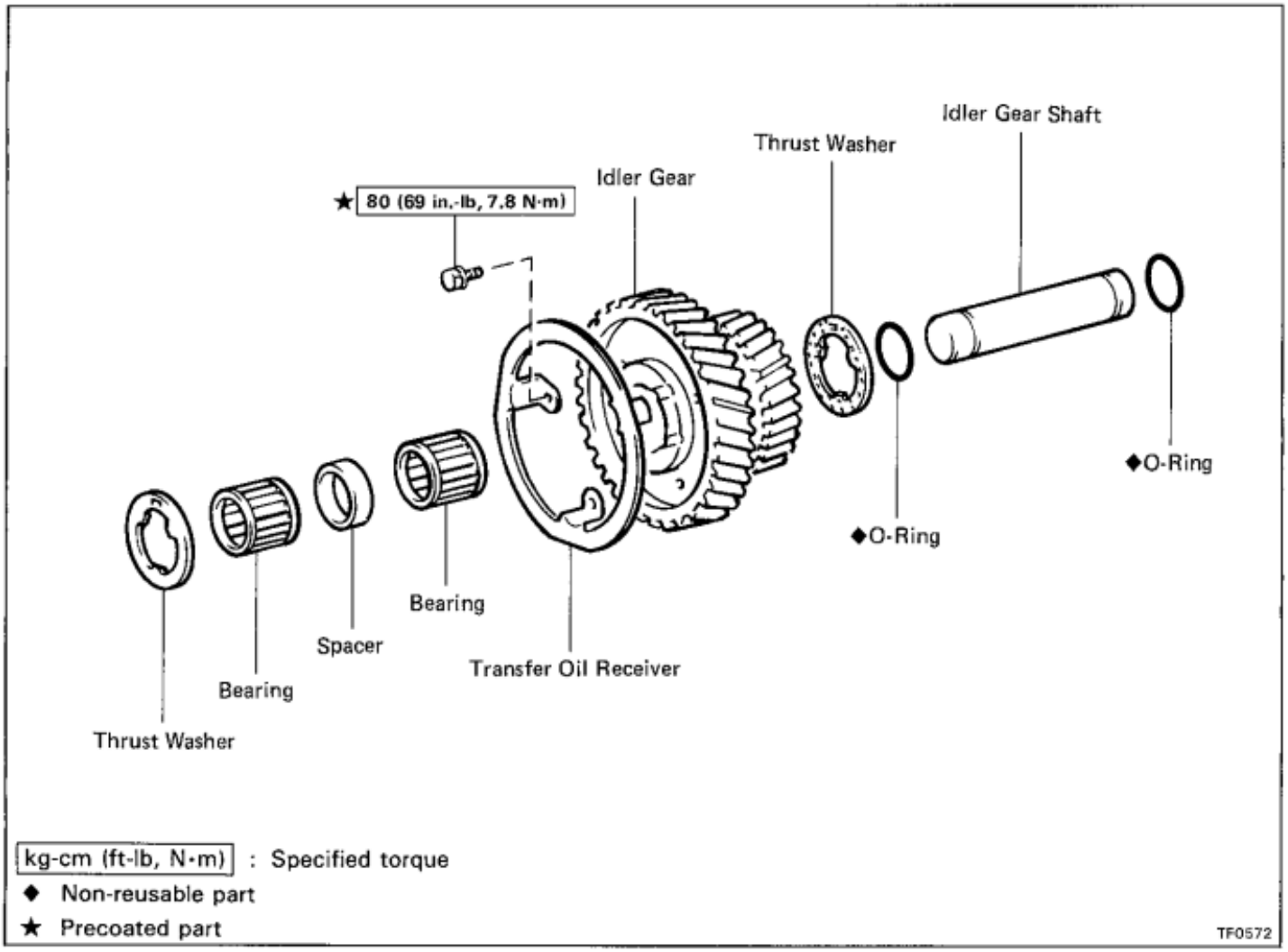

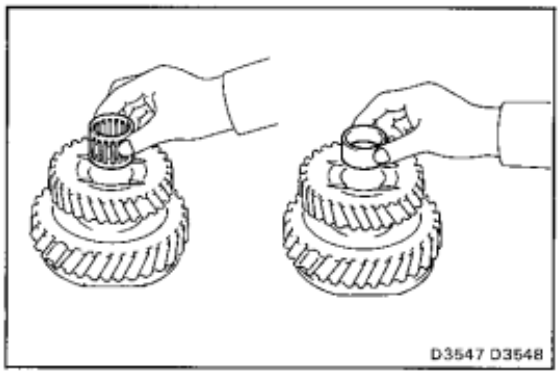

DISASSEMBLY OF IDLER GEAR

1. REMOVE TWO BEARINGS AND SPACER

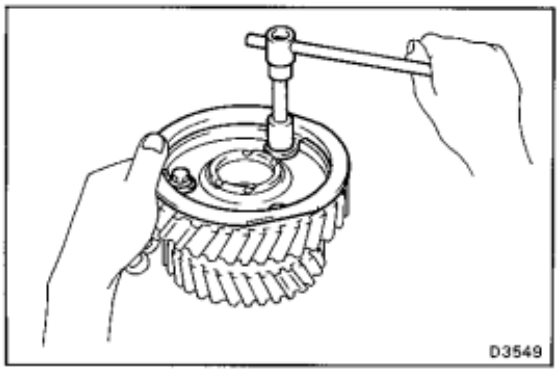

2. REMOVE TRANSFER OIL RECEIVER

Remove the three bolts and transfer oil receiver from the idler gear.

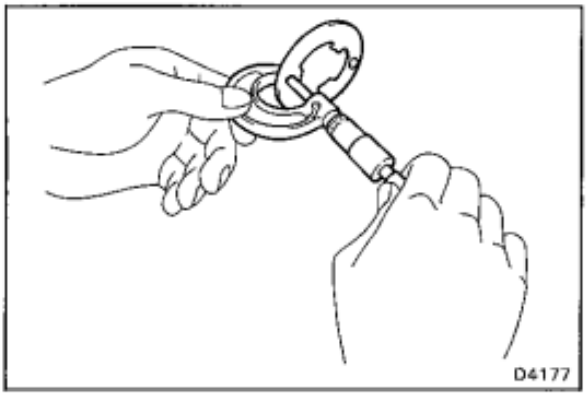

INSPECTION OF IDLER GEAR COMPONENT

INSPECT THRUST WASHER

Using a micrometer, measure the thrust washer thickness.

Standard thickness: **1.95 — 2.05 mm (0.077 — 0.081 in.)**

Minimum thickness: **1.65 mm (0.065 in.)**

If the thickness is less than minimum, replace the thrust washer.

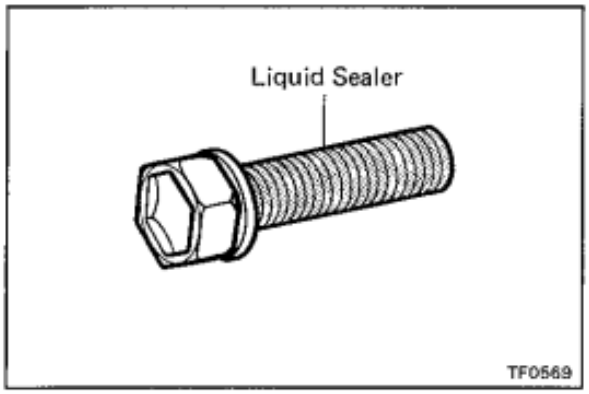

ASSEMBLY OF IDLER GEAR

1. INSTALL TRANSFER OIL RECEIVER

(a) Clean the threads of the bolts and case with cleaner.

(b) Apply liquid sealer to the bolt threads.

Sealant: **Part No.08833-00070, THREE BOND 1324 or equivalent**

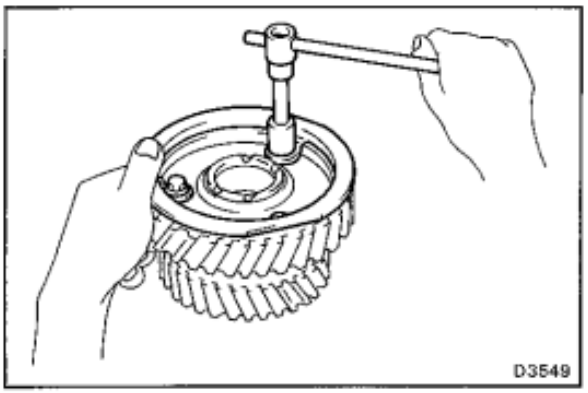

(c) Install the transfer oil receiver with the three bolts.

Torque: **80 kg-cm (69 ft-lb, 7.8 N·m)**

2. INSTALL TWO BEARINGS AND SPACER

(a) Apply MP grease to the two bearings.

(b) Install the two bearings and spacer to the idler gear.

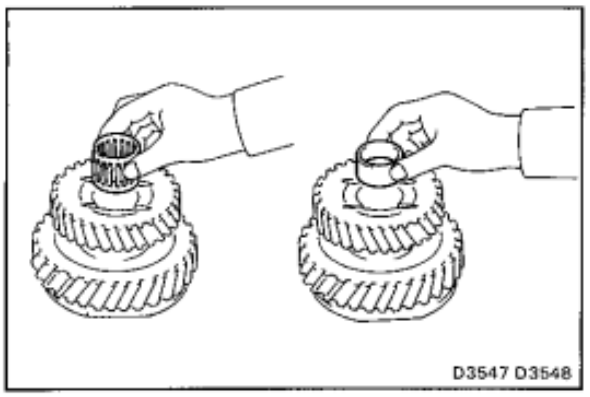

Rear Output Shaft Bearing Retainers

COMPONENTS

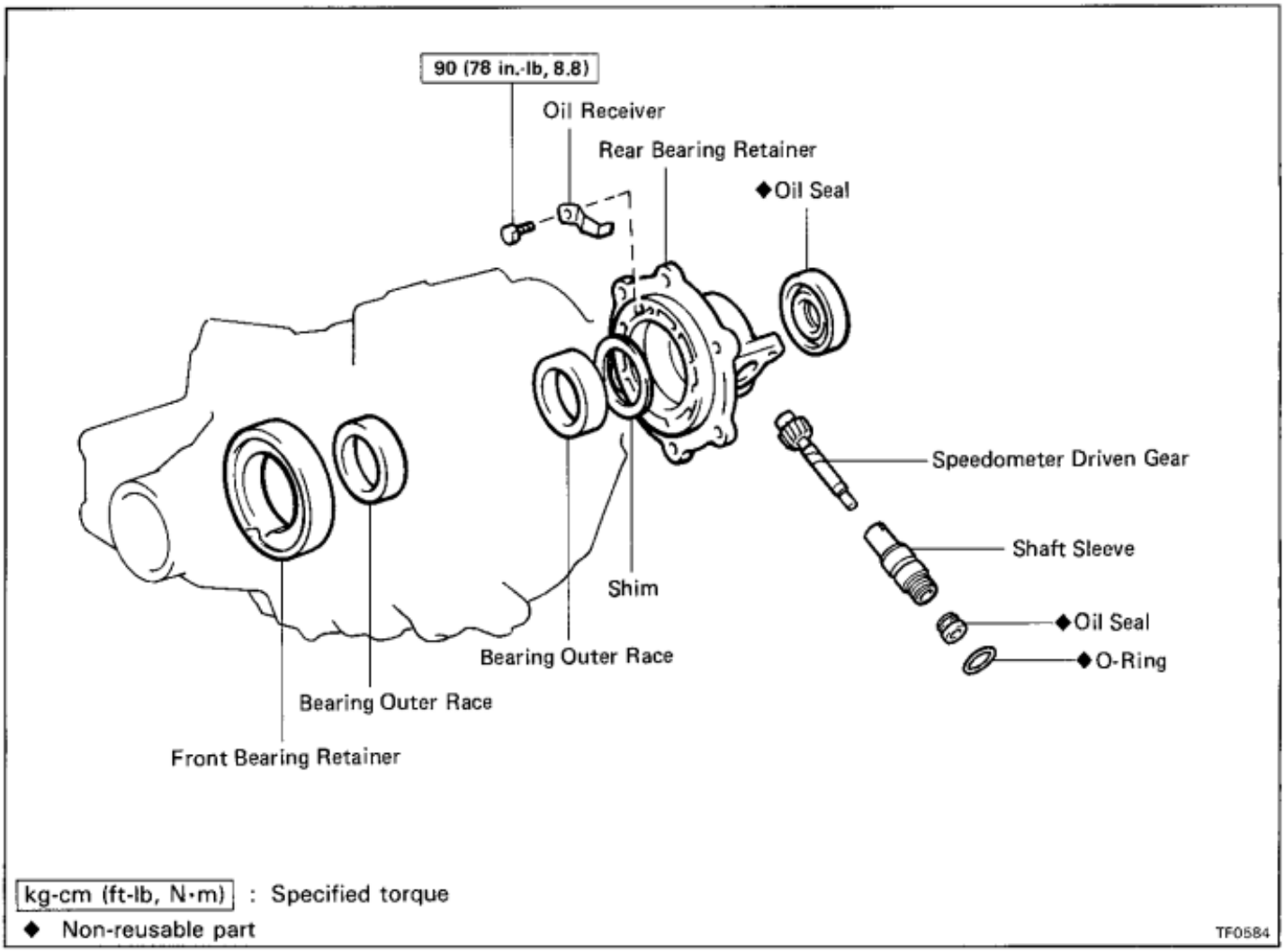

kg-cm (ft-lb, N·m) : Specified torque
◆ Non-reusable part

TF0584

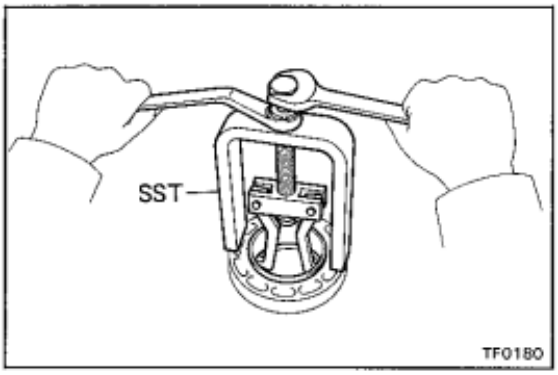

TF0180

INSPECTION AND REPAIR OF REAR OUTPUT SHAFT BEARING RETAINERS

1. **IF NECESSARY, REPLACE REAR OUTPUT SHAFT FRONT BEARING OUTER RACE**

   (a) Using SST, remove the outer race of the front bearing retainer.

   SST 09514-35011

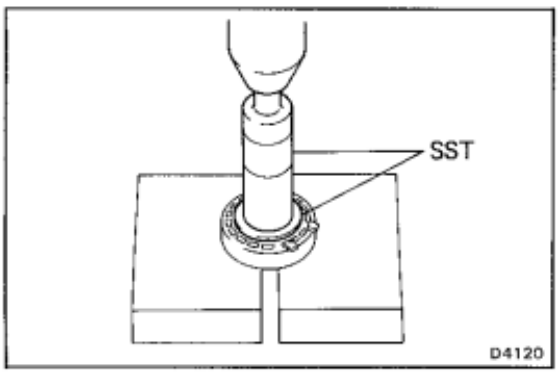

D4120

   (b) Using SST and a press, press a new outer race into the front bearing retainer.

   SST 09316-60010 (09316-00010, 09316-00040)

   HINT: Replace both the outer race and the bearing as a set.

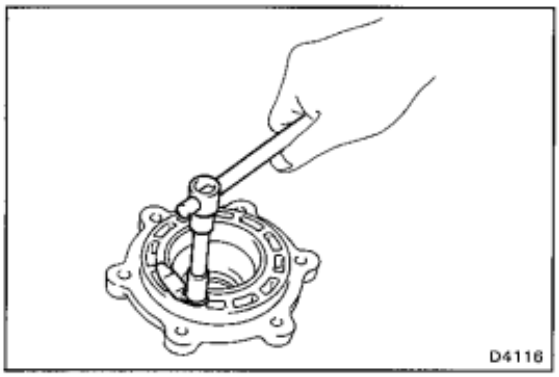

2. IF NECESSARY, REPLACE REAR OUTPUT SHAFT REAR BEARING OUTER RACE

(a) Remove the bolt and oil receiver from the rear bearing retainer.

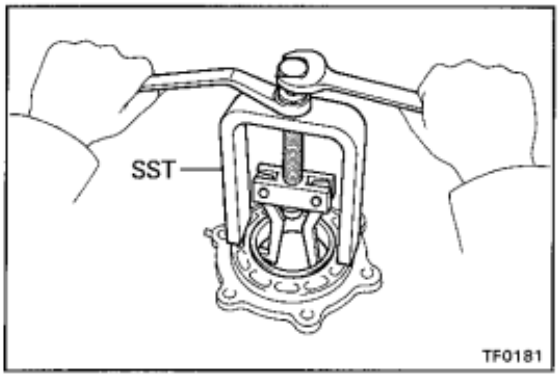

(b) Using SST, remove the bearing outer race and shim from the rear bearing retainer.

SST 09514-35011

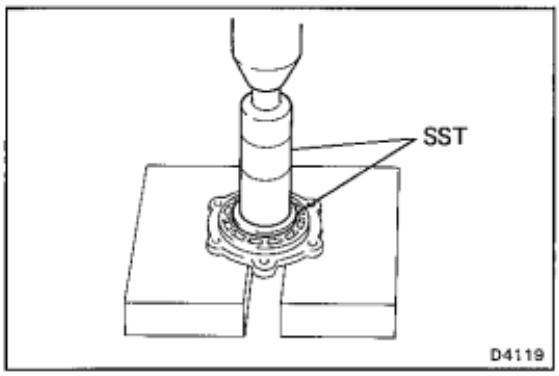

(c) Install the shim into the rear bearing retainer.

HINT: Reinstall the removed shim.

(d) Using SST, press a new rear outer race into the rear bearing retainer.

SST 09316-60010 (09316-00010, 09316-00030)

HINT: Replace both the outer race and the bearing as set.

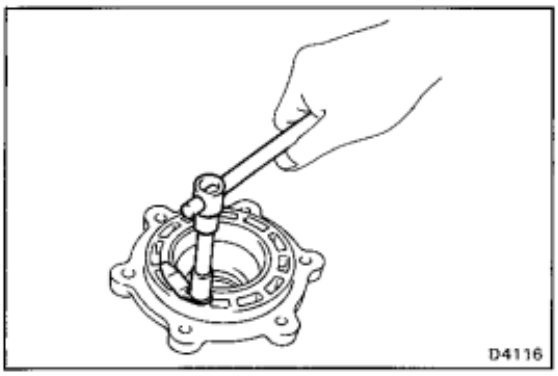

(e) Install the oil receiver to the rear bearing retainer with the bolt.

Torque: 90 kg-cm (78 in.-lb, 8.8 N·m)

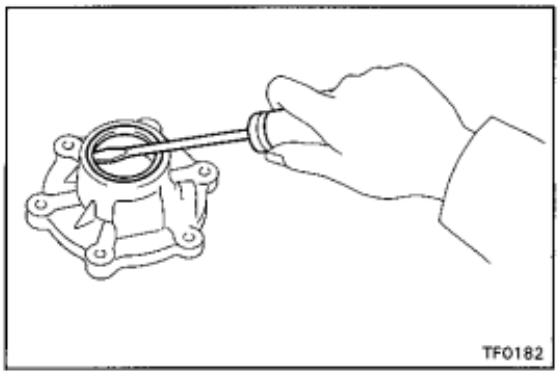

3. IF NECESSARY, REPLACE REAR OUTPUT SHAFT OIL SEAL

(a) Using a screwdriver, remove the oil seal.

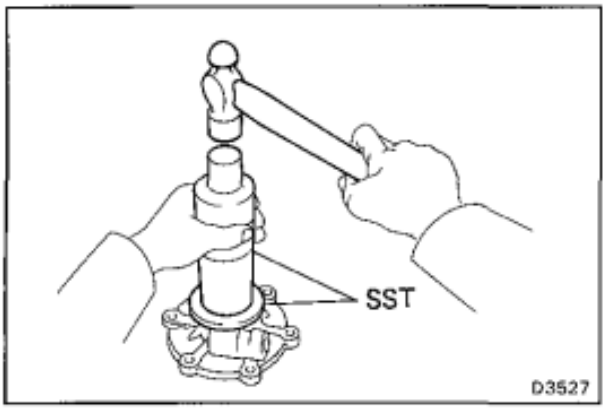

(b) Using SST and a hammer, tap in a new oil seal.

SST 09316-60010 (09316-00010, 09316-00060)

(c) Apply MP grease to oil seal lip.

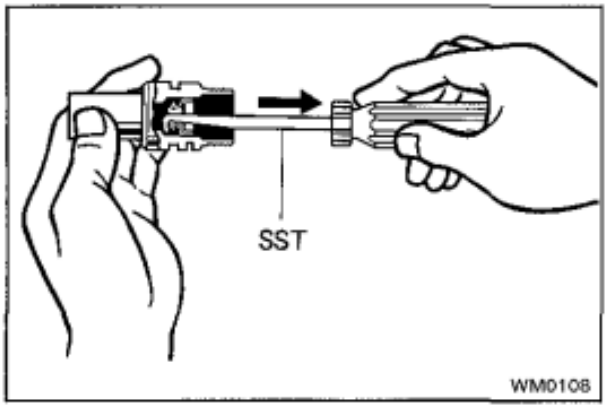

4. IF NECESSARY, REPLACE SPEEDOMETER DRIVEN GEAR OIL SEAL

(a) Using SST, pull out the oil seal.

SST 09921-00010

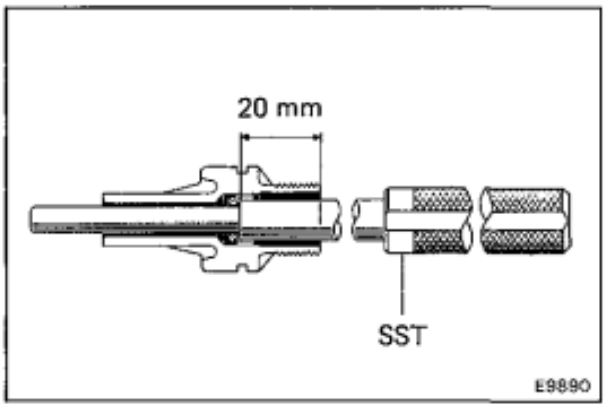

(b) Using SST, tap a new oil seal into the sleeve.

SST 09201-60011

Oil seal depth: 20 mm (0.79 in.)

Transfer Front Case

COMPONENTS

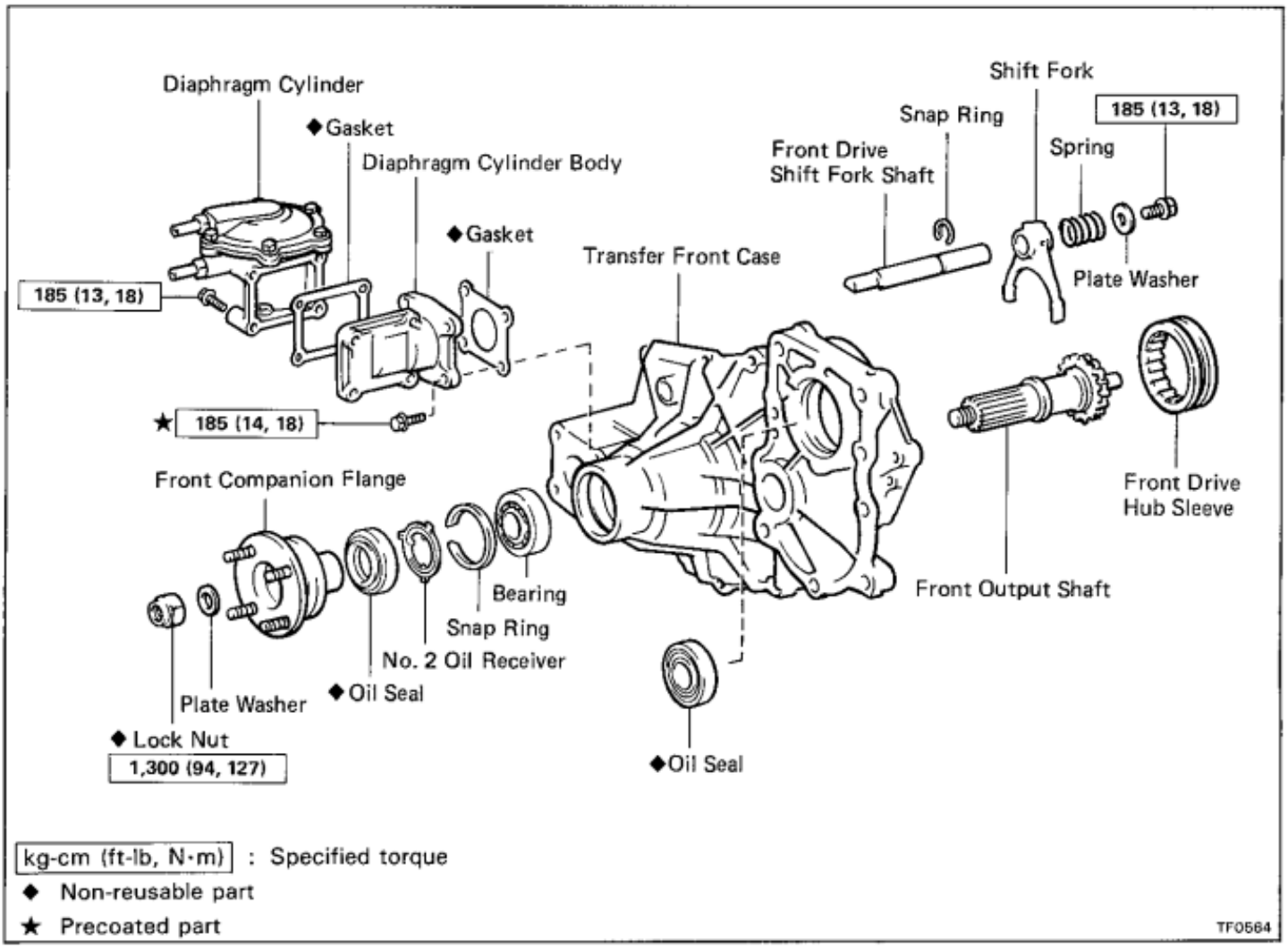

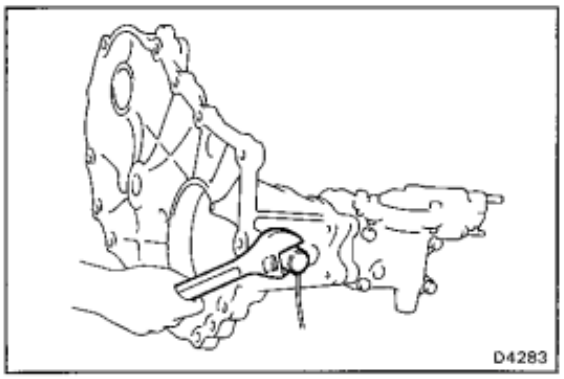

DISASSEMBLY OF TRANSFER FRONT CASE

1. REMOVE 4WD INDICATOR SWITCH

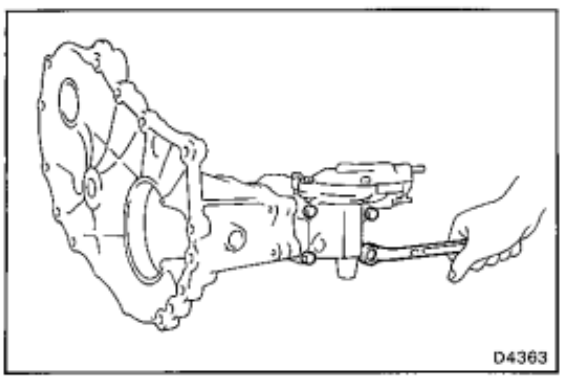

2. [VACUUM SHIFT TYPE]
REMOVE DIAPHRAGM CYLINDER ASSEMBLY

(a) Remove the four bolts, diaphragm cylinder and gasket.

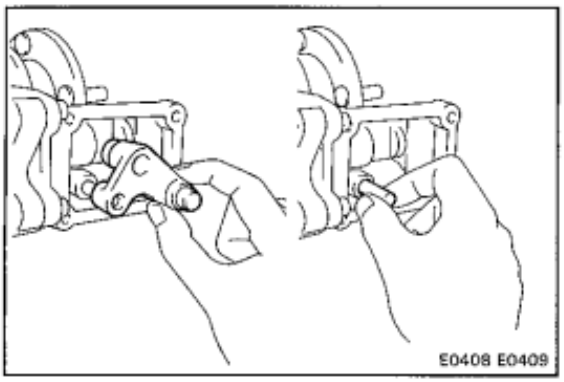

(b) Remove the shift link lever and straight pin.

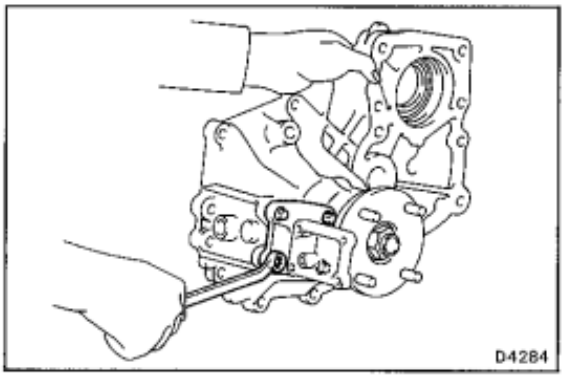

(c) Remove the four bolts, diaphragm cylinder body and gasket.

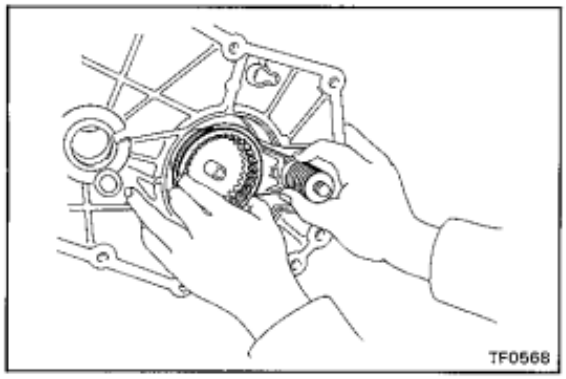

3. REMOVE FRONT DRIVE HUB SLEEVE

Remove the hub sleeve with front drive shift fork shaft assembly.

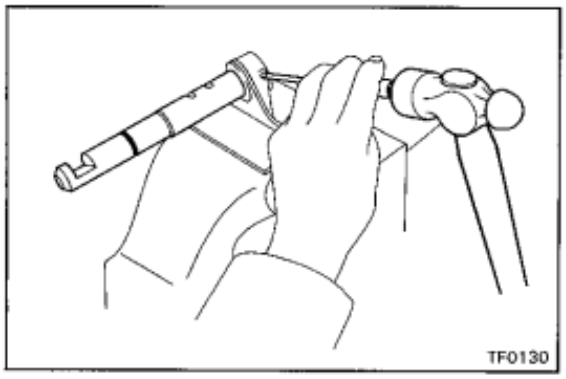

4. REMOVE FRONT DRIVE SHIFT FORK SHAFT

[Direct Shift Type]

(a) Mount the front drive shift fork shaft in a soft jaw vise.

(b) Using a pin punch and hammer, drive out the slotted spring pin.

(c) Remove the shift fork from the shift fork shaft.

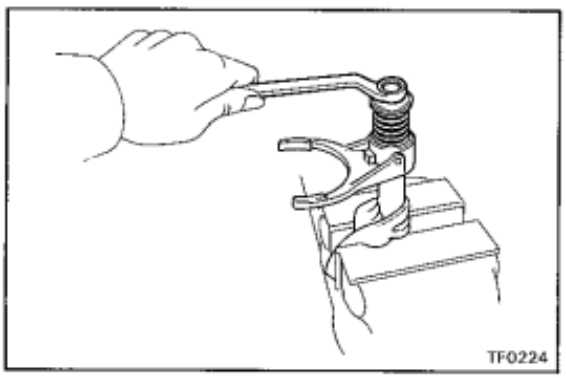

[Vacuum Shift Type]

(a) Remove the bolt, plate washer, spring and shift fork from the shift fork shaft.

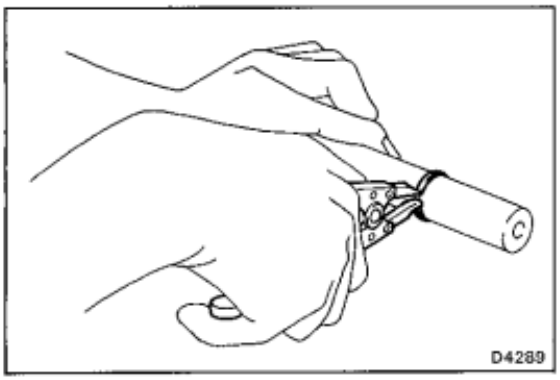

(b) Using snap ring pliers, remove the snap ring.

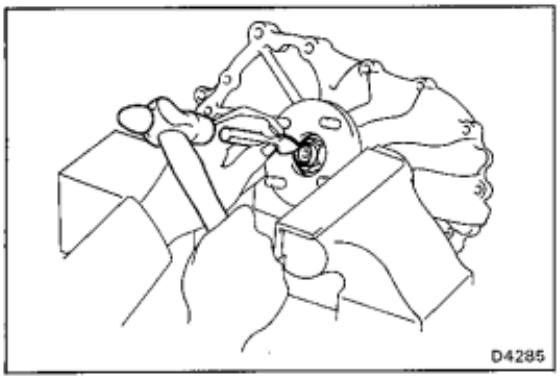

5. REMOVE FRONT COMPANION FLANGE

(a) Mount the companion flange in a vise.

(b) Using a hammer and chisel, loosen the staked part of the nut.

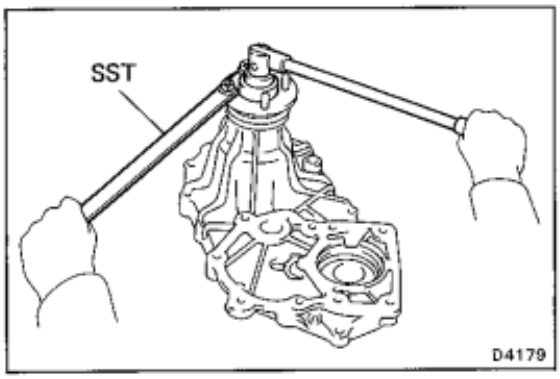

(c) Using SST and two nuts to hold the front companion flange, remove the companion flange lock nut.

SST 09330-00021

(d) Remove the plate washer and companion flange.

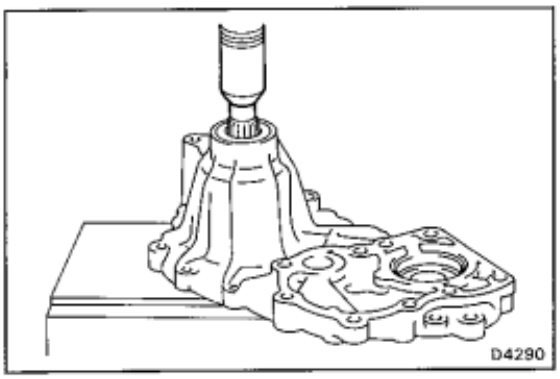

6. REMOVE FRONT OUTPUT SHAFT

Using a press, press out the front output shaft.

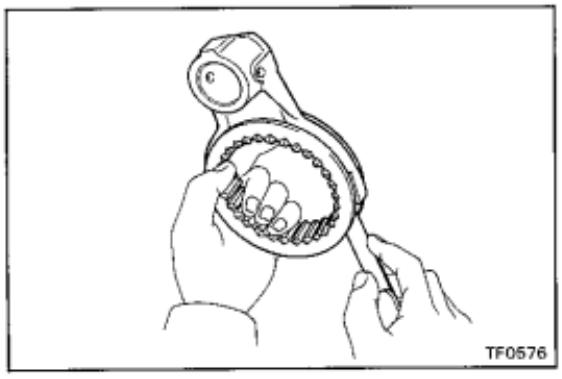

INSPECTION OF TRANSFER FRONT CASE

1. INSPECT CLEARANCE OF SHIFT FORK AND HUB SLEEVE

Using a feeler gauge, measure the clearance between the hub sleeve and shift fork.

Maximum clearance: 1.0 mm (0.039 in.)

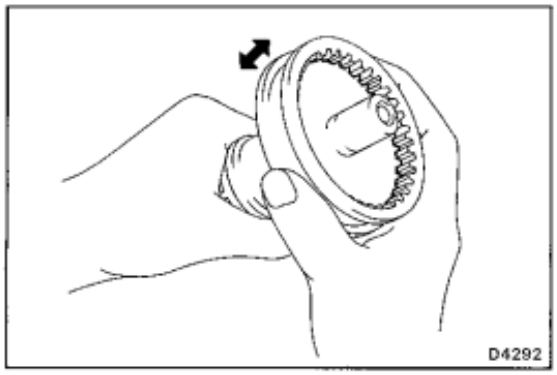

2. INSPECT FRONT DRIVE CLUTCH HUB SLEEVE

(a) Install the clutch hub sleeve to the front output shaft.

(b) Check that the hub sleeve moves smoothly.

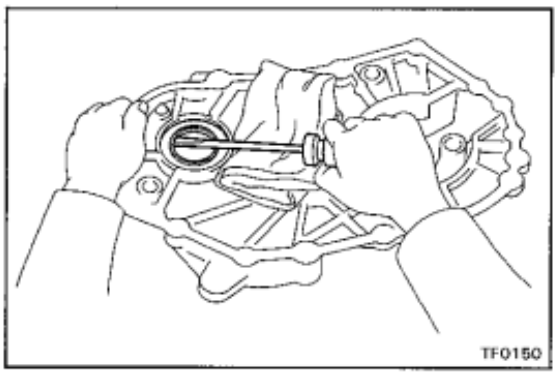

3. IF NECESSARY, REPLACE TRANSMISSION REAR OIL SEAL

(a) Using a screwdriver, remove the oil seal.

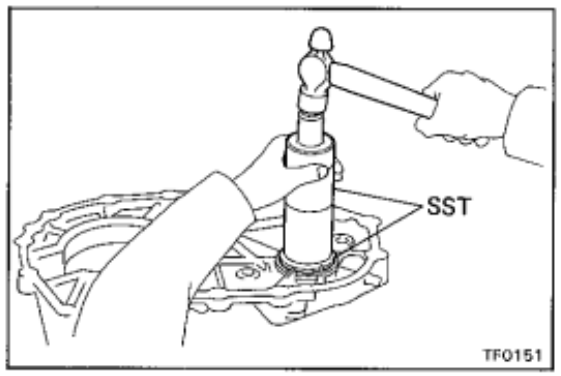

(b) Using SST and a hammer, tap in a new oil seal.

SST 09316-60010 (09316-00010, 09316-00030)

(c) Apply MP grease to the oil seal lip.

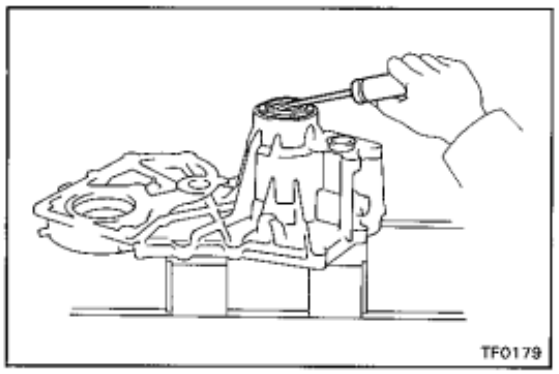

4. IF NECESSARY, REPLACE FRONT OUTPUT SHAFT OIL SEAL

(a) Using a screwdriver, remove the oil seal.

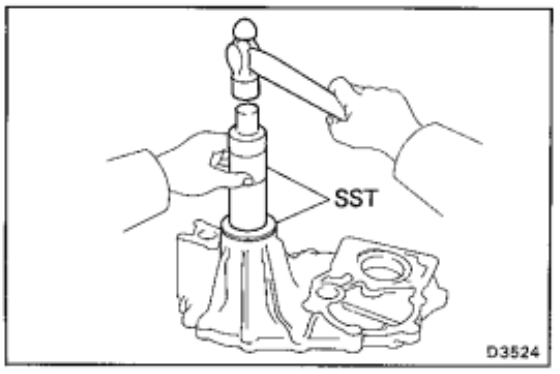

(b) Using SST and a hammer, tap in a new oil seal.

SST 09316-60010 (09316-00010, 09316-00060)

(c) Apply MP grease to the oil seal lip.

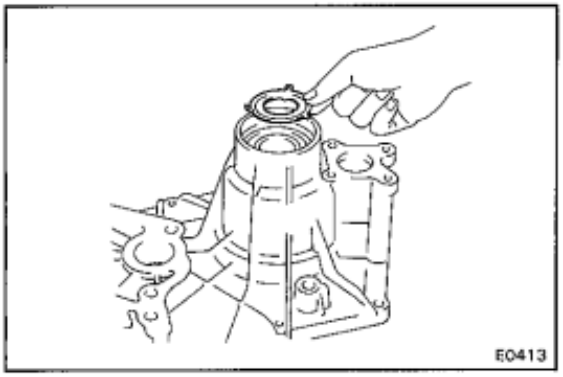

5. IF NECESSARY, REPLACE FRONT OUTPUT SHAFT BEARING

(a) Remove the front output shaft oil seal.

(b) Remove the No.2 oil receiver.

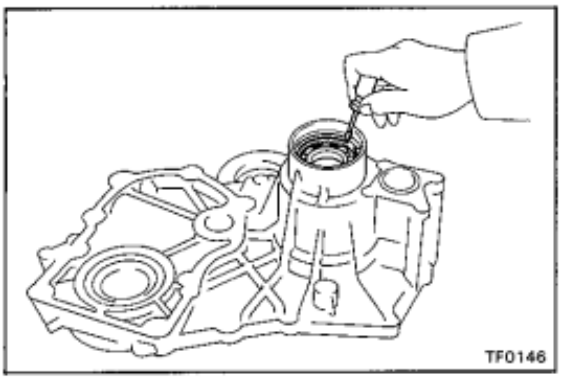

(c) Using a screwdriver, remove the snap ring.

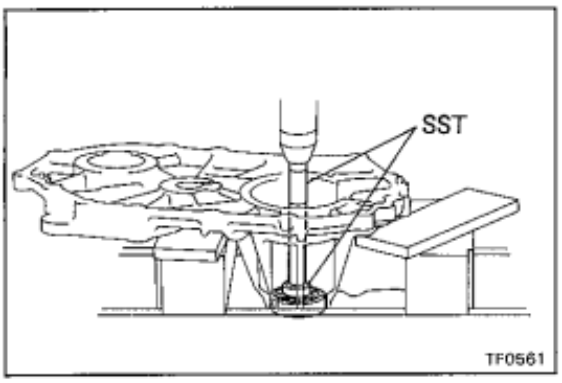

(d) Using SST and a press, press out the bearing.

SST 09608-20012 (09608-00040, 09608-03020)

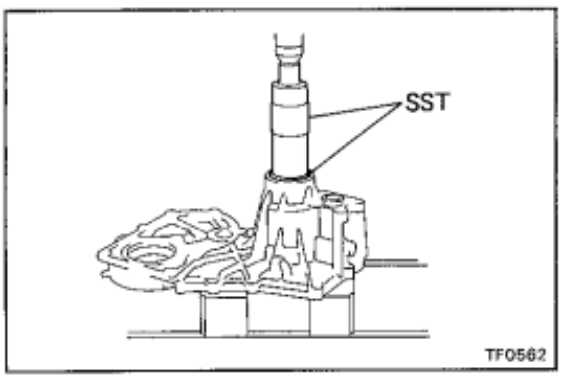

(e) Using SST and a press, press in a new bearing.

SST 09316-60010 (09316-00010, 09316-00020)

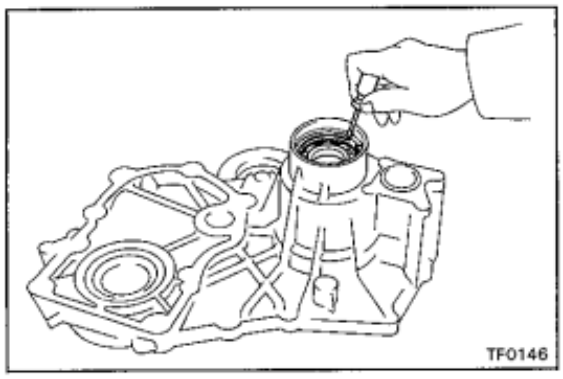

(f) Install the snap ring.

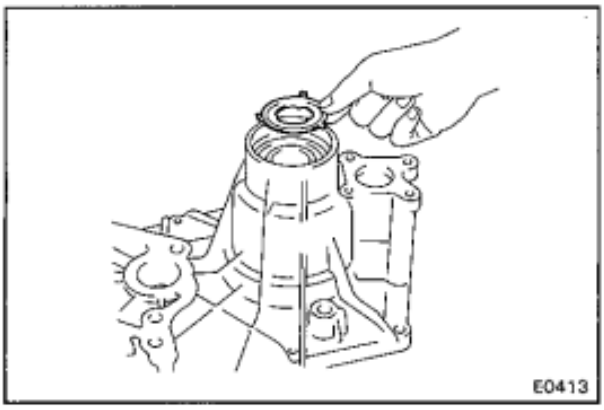

(g) Install the No.2 oil receiver.

(h) Install a new front output shaft oil seal.

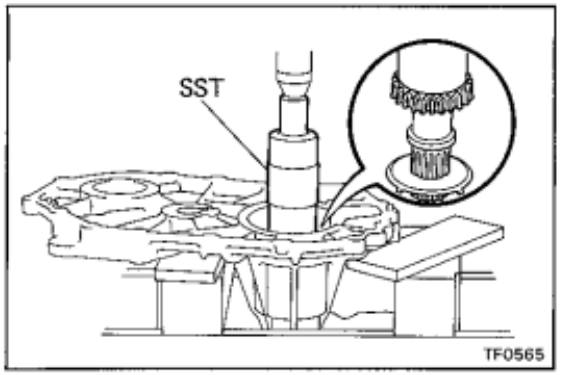

ASSEMBLY OF TRANSFER FRONT CASE

1. INSTALL FRONT OUTPUT SHAFT

Using SST and a press, press in the front output shaft to the transfer front case.

SST 09316-60010 (09316-00010)

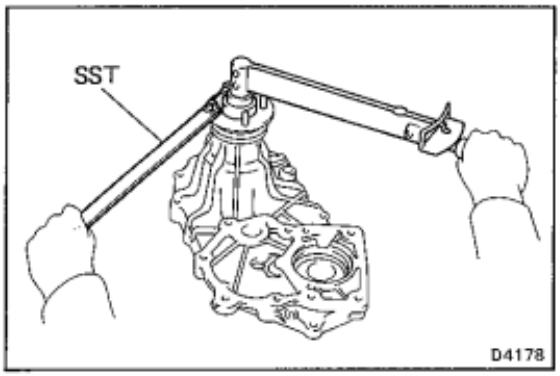

2. INSTALL FRONT COMPANION FLANGE

(a) Install the companion flange and plate washer.

(b) Using SST and two nuts to hold the companion flange, install a new companion flange lock nut.

SST 09330-00021

Torque: 1,300 kg-cm (94 ft-lb, 127 N·m)

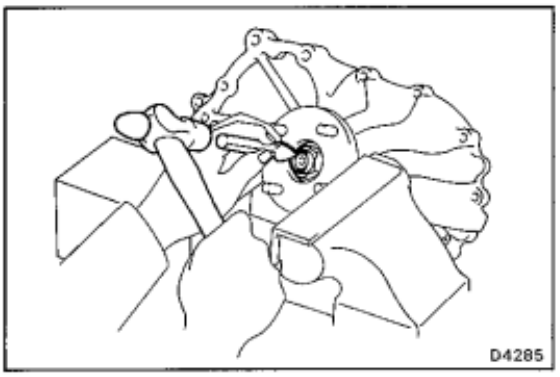

(c) Mount the companion flange in a vise.

(d) Using a hammer and chisel, stake the companion flange lock nut.

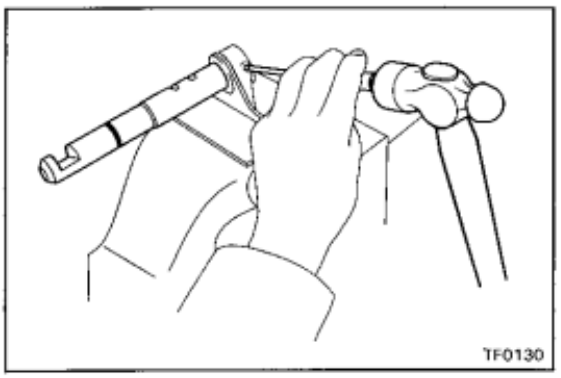

3. INSTALL FRONT DRIVE SHIFT FORK SHAFT

[Direct Shift Type]

(a) Mount the front drive shift fork in a soft jaw vise.

(b) Install the front drive shift fork shaft into shift fork.

(c) Using a pin punch and a hammer, drive in the slotted spring pin.

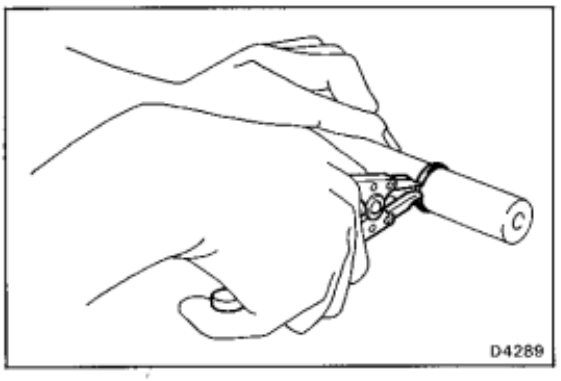

[Vacuum Shift Type]

(a) Using snap ring pliers, install the snap ring.

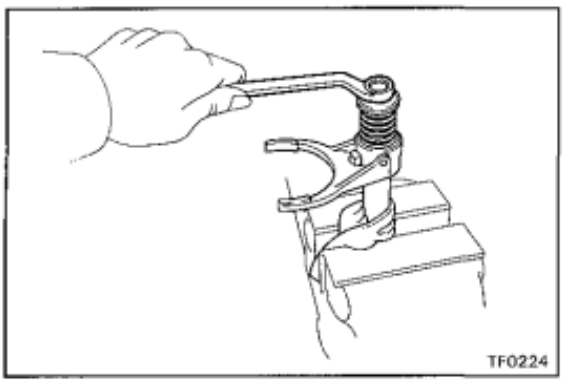

(b) Install the shift fork, spring and plate washer to the shift fork shaft with the bolt.

Torque: 185 kg-cm (13 ft-lb, 18 N·m)

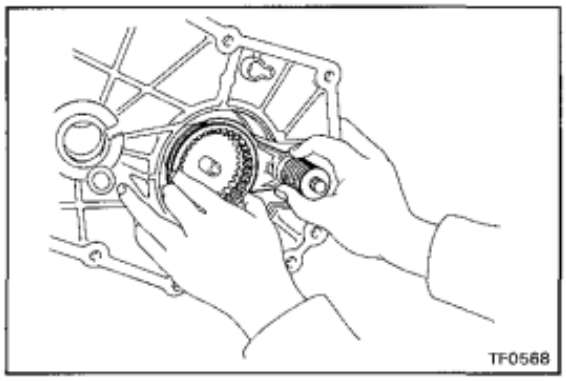

4. INSTALL FRONT DRIVE HUB SLEEVE

Install the hub sleeve with front drive shift fork shaft assembly.

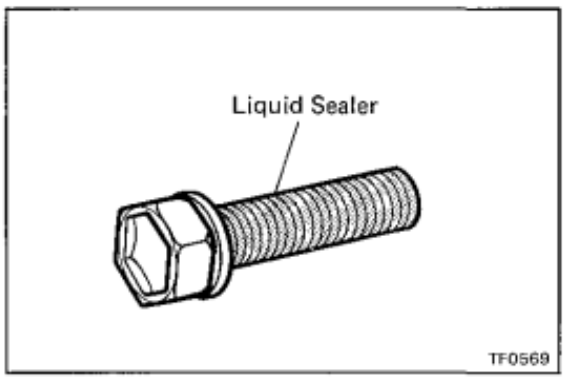

5. (VACCUM SHIFT TYPE)
INSTALL DIAPHRAGM CYLINDER ASSEMBLY

(a) Clean the threads of the bolts and case with cleaner.

(b) Apply liquid sealer to the bolts threads.

Sealant: Part No.08833-00070, THREE BOND 1324 or equivalent

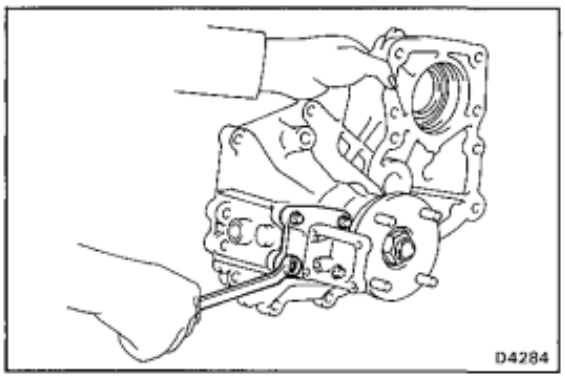

(c) Install a new gasket and the diaphragm cylinder body to the transfer front case with the four bolts.

Torque: 185 kg-cm (13 ft-lb, 18 N·m)

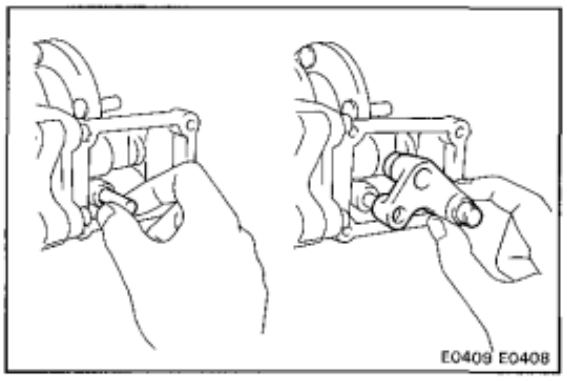

(d) Apply MP grease to the shoe and straight pin.

(e) Install the shift link lever and straight pin.

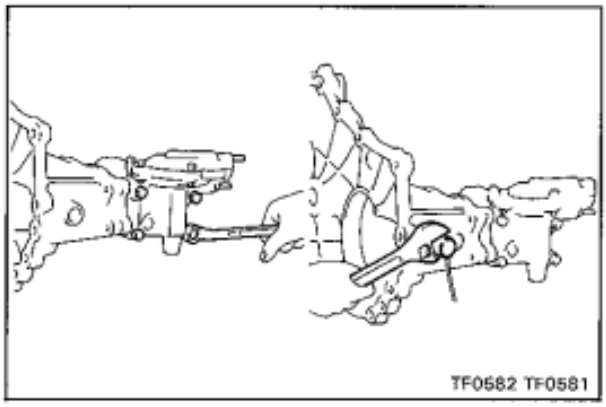
TF0582 TF0581

(f) Install a new gasket and the diaphragm cylinder to the diaphragm cylinder body with the four bolts.

Torque: 185 kg-cm (13 ft-lb, 18 N·m)

6. INSTALL 4WD INDICATOR SWITCH

Diaphragm Cylinder

COMPONENTS

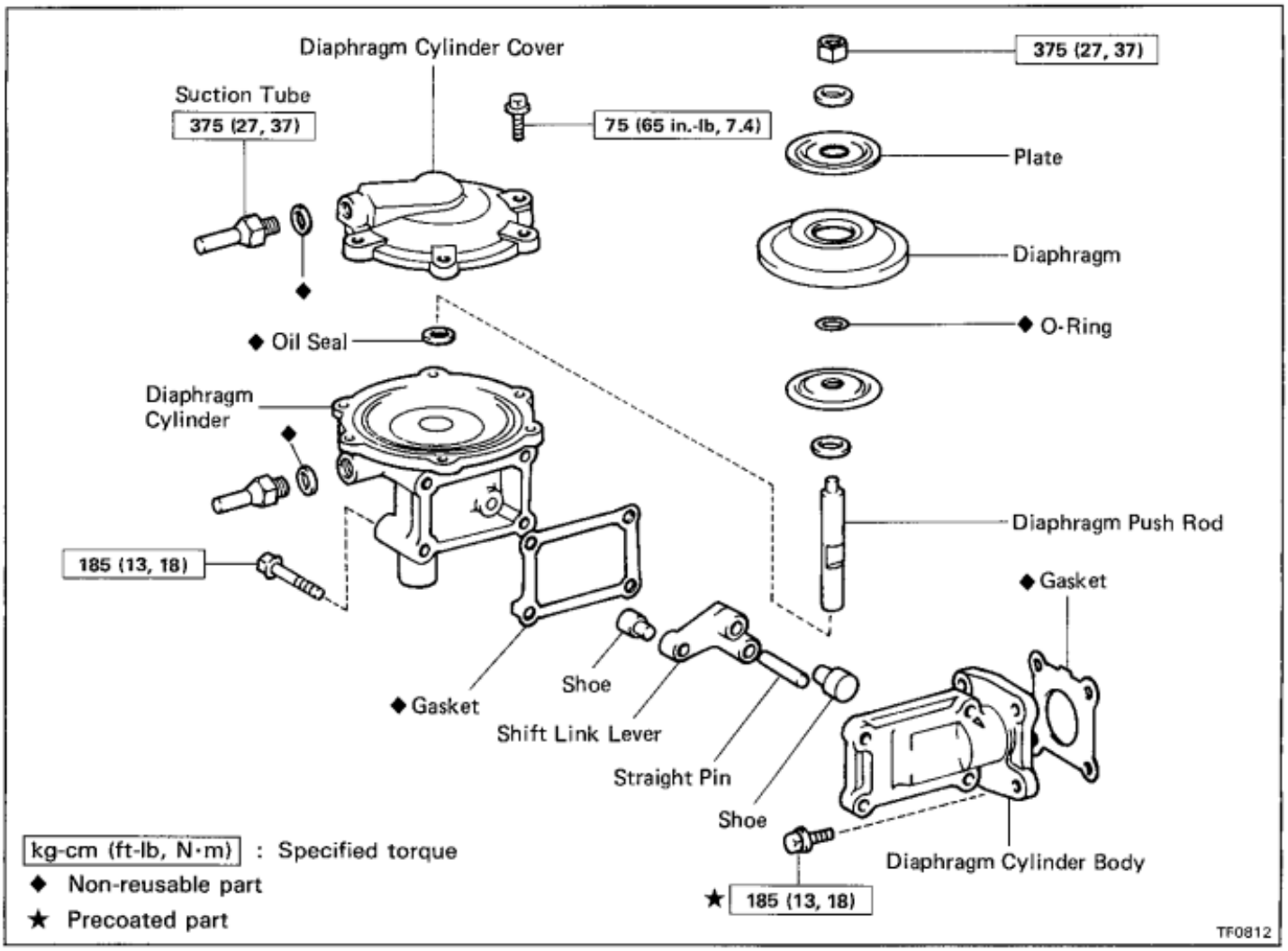

DISASSEMBLY OF DIAPHRAGM CYLINDER

1. **REMOVE DIAPHRAGM CYLINDER ASSEMBLY (See page TF-22)**

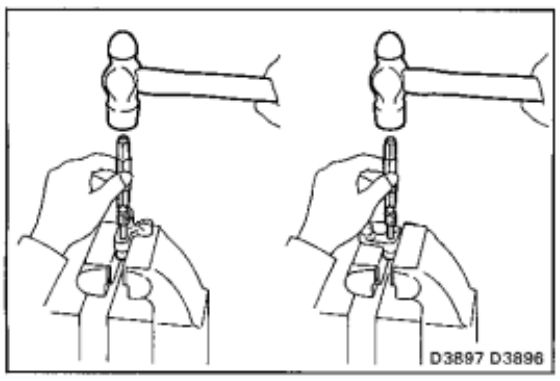

2. **REMOVE SHOE FROM SHIFT LINK LEVER**

Using a pin punch and hammer, drive out the two shoes from the shift link lever.

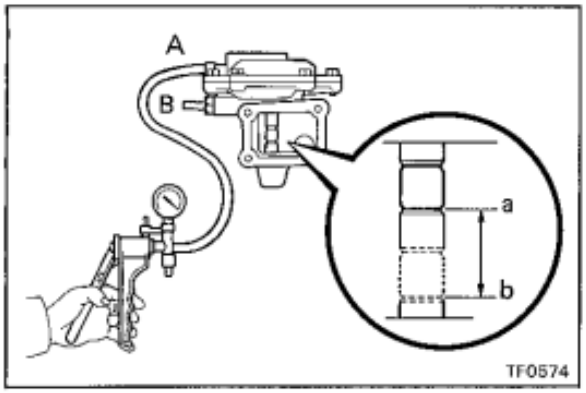

3. INSPECT DIAPHRAGM CYLINDER ASSEMBLY

(a) With at least 400 mmHg (15.75 in.Hg, 53.3 kPa) of vacuum in the port A or B, check that the shaft moves.

(b) Check the stroke between a and b.

Standard stroke: 21 mm (0.82 in.)

(c) With at least 400 mmHg (15.75 in.Hg, 53.3 kPa) of vacuum in the diaphragm, check that the gauge needle is stable.

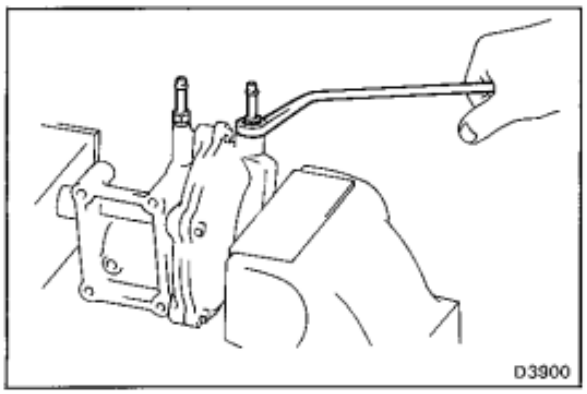

4. REMOVE SUCTION TUBES

Remove the suction tubes and gaskets from the diaphragm cylinder and cover.

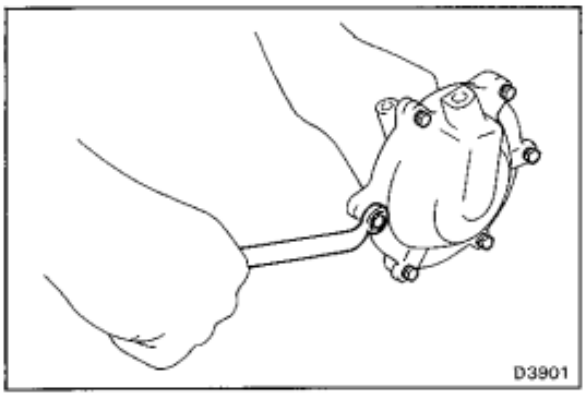

5. REMOVE DIAPHRAGM CYLINDER COVER AND PUSH ROD

Remove the six bolts, diaphragm cylinder cover and push rod.

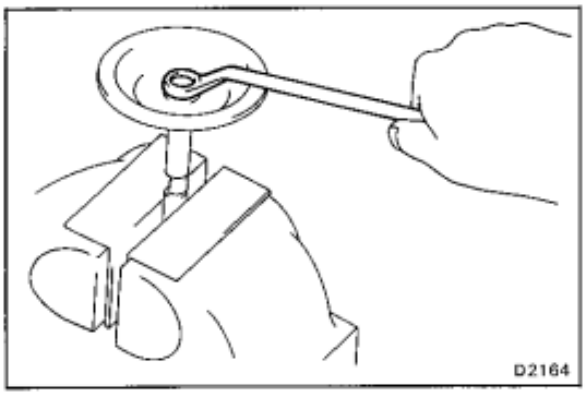

6. REMOVE FOLLOWING PARTS FROM DIAPHRAGM PUSH ROD

(a) Nut

(b) Two washers

(c) Two plates

(d) Diaphragm

(e) O-ring

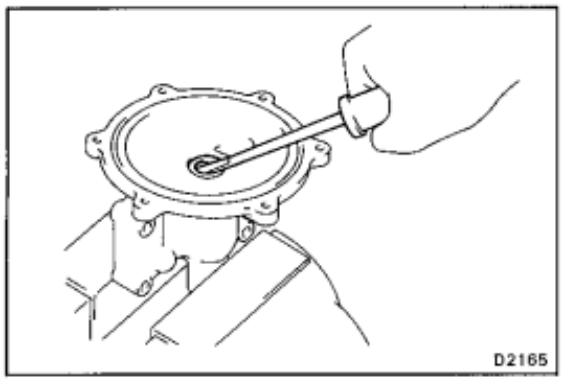

INSPECTION AND REPAIR OF DIAPHRAGM CYLINDER

IF NECESSARY, REPLACE OIL SEAL

(a) Using a screwdriver, remove the oil seal.

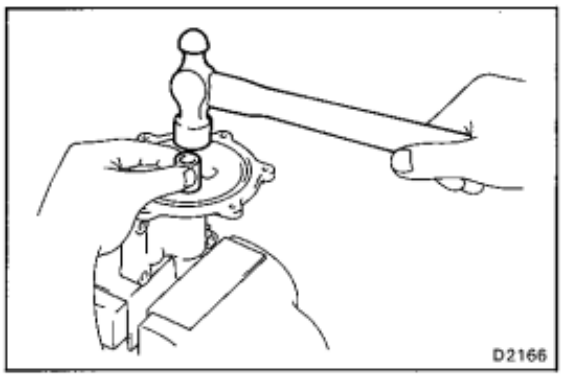

(b) Using a socket wrench, tap in a new oil seal.

(c) Apply MP grease to the oil seal lip.

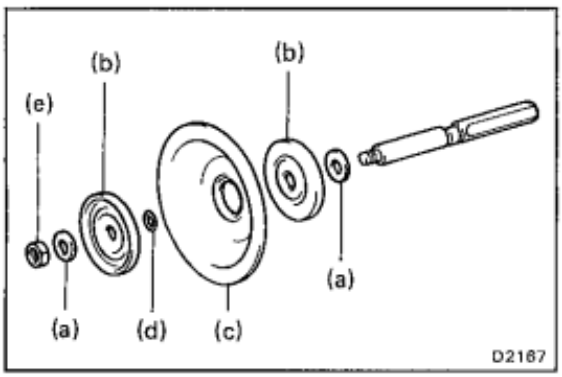

ASSEMBLY OF DIAPHRAGM CYLINDER

1. INSTALL FOLLOWING PARTS TO DIAPHRAGM PUSH ROD

(a) Two washers

(b) Two plates

(c) Diaphragm

(d) O-ring

(e) Nut

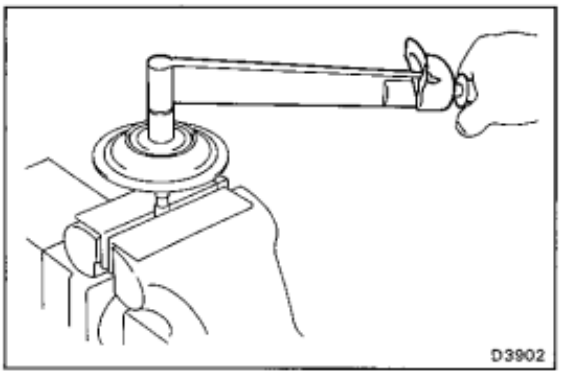

2. TORQUE DIAPHRAGM PUSH ROD NUT

Torque: 375 kg-cm (27 ft-lb, 37 N·m)

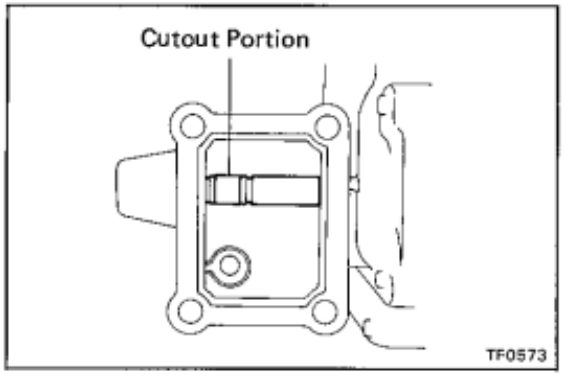

3. INSTALL DIAPHRAGM PUSH ROD INTO DIAPHRAGM CYLINDER

Install the cutout portion of the push rod into the open part of the diaphragm cylinder.

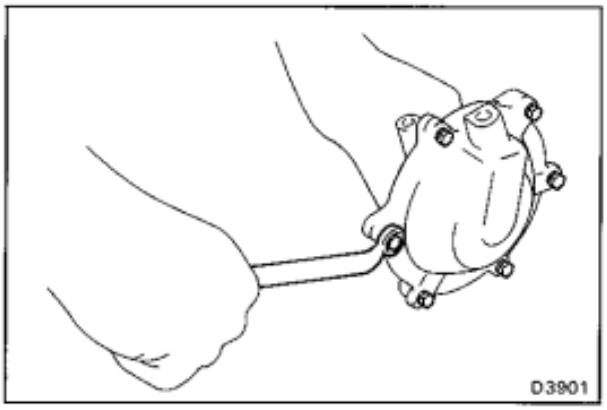

4. **INSTALL DIAPHRAGM CYLINDER COVER**

Install the diaphragm cylinder cover to the diaphragm cylinder with the six bolts.

Torque: 75 kg-cm (65 in.-lb, 7.4 N·m)

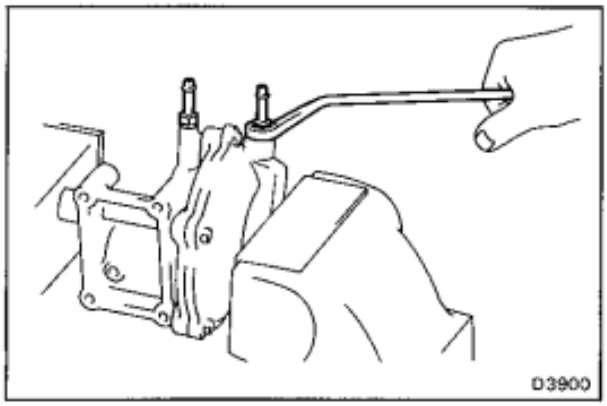

5. **INSTALL SUCTION TUBES**

Install the suction tubes with new gaskets.

Torque: 375 kg-cm (27 ft-lb, 37 N·m)

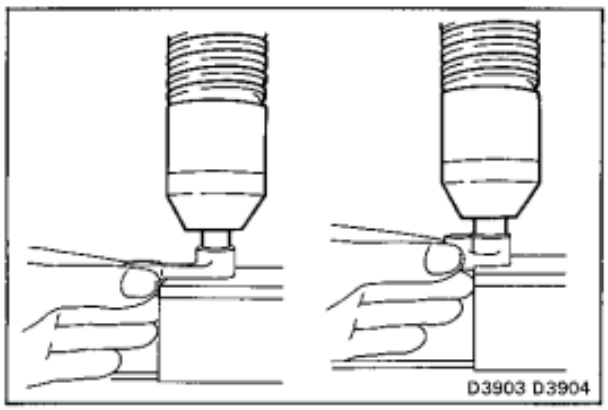

6. **INSTALL SHOE TO SHIFT LINK LEVER**

Using a press, press in the two shoes to the shift link lever.

7. **INSTALL DIAPHRAGM CYLINDER ASSEMBLY**
(See page TF-30)

Transfer Rear Case

COMPONENTS

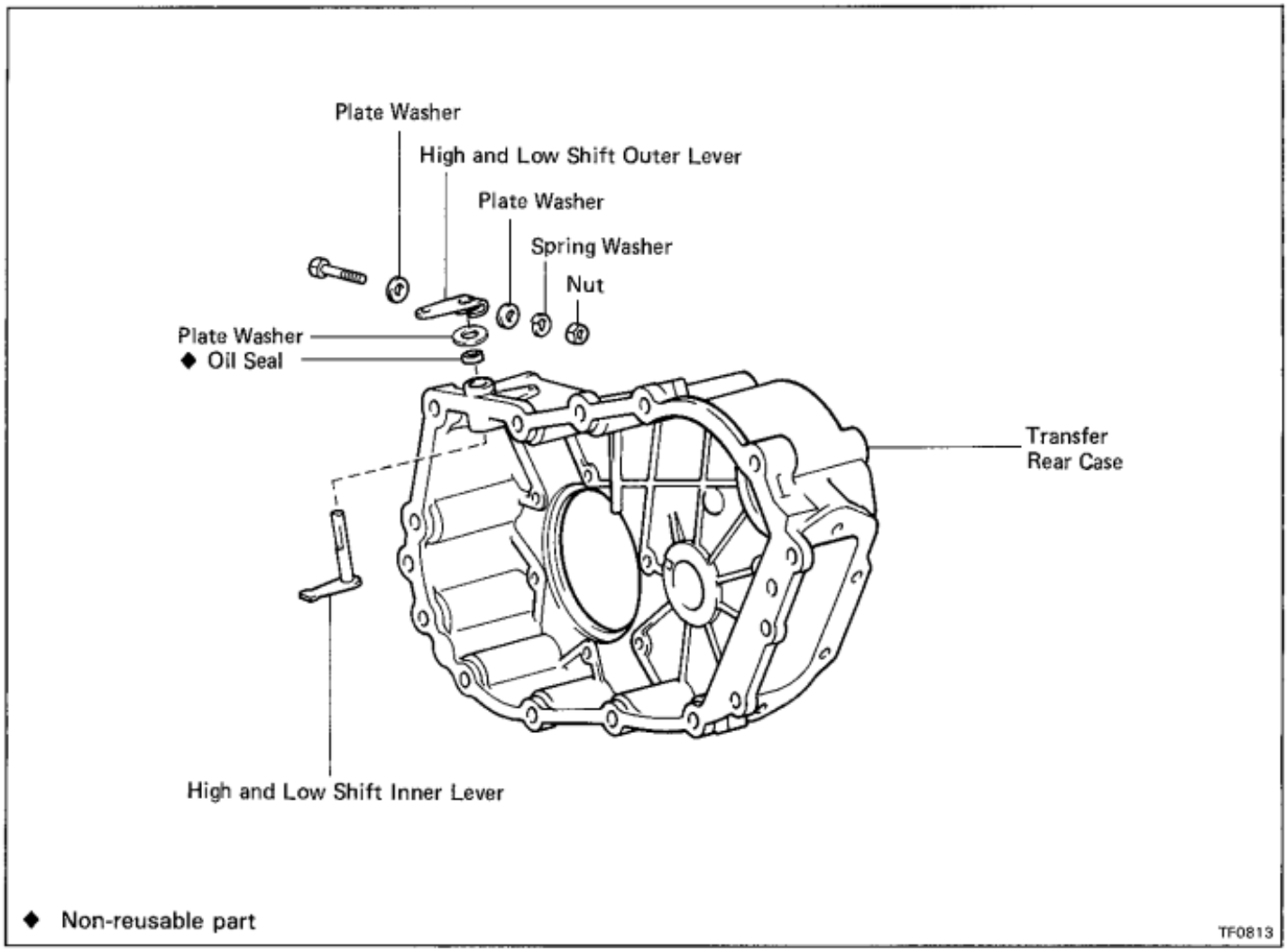

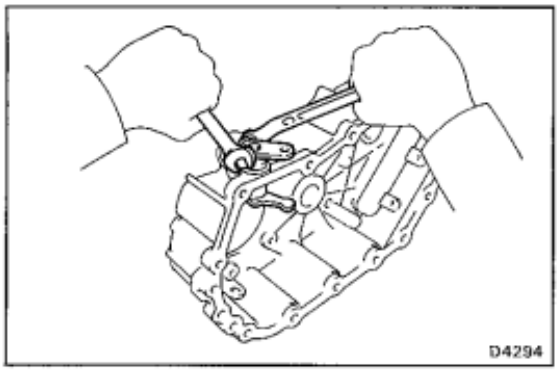

DISASSEMBLY OF TRANSFER REAR CASE

REMOVE OUTER AND INNER LEVERS OF TRANSFER HIGH AND LOW SHIFT

(a) Remove the nut, spring washer, two plate washers and bolt.

(b) Remove the shift outer lever and washer.

(c) Remove the shift inner lever.

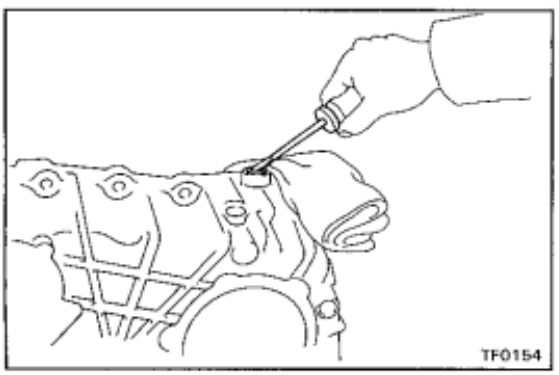

INSPECTION AND REPAIR OF TRANSFER REAR CASE

IF NECESSARY, REPLACE HIGH AND LOW SHIFT LEVER SHAFT OIL SEAL

(a) Using a screwdriver, remove the oil seal.

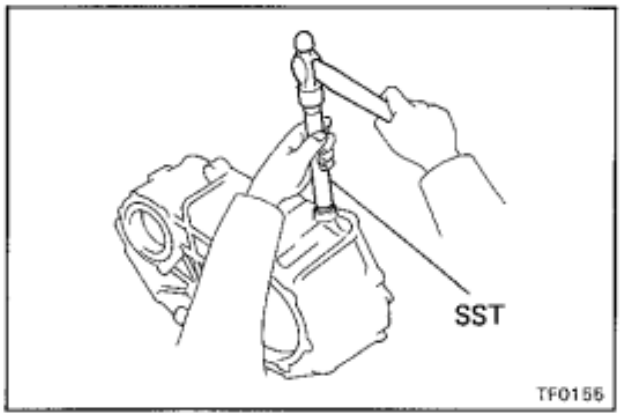

(b) Using SST and a hammer, tap in a new oil seal.

SST 09608-20012 (09608-03020)

(c) Apply MP grease to the oil seal lip.

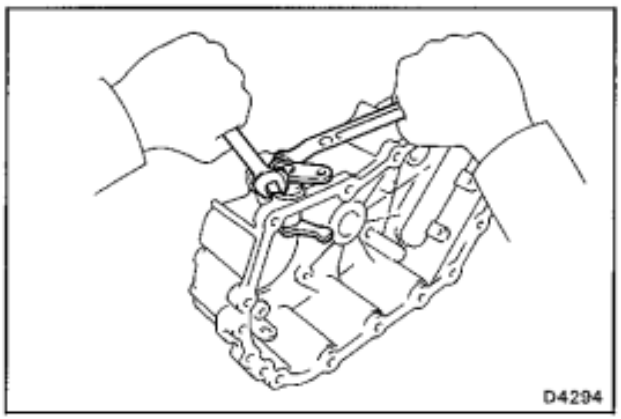

ASSEMBLY OF TRANSFER REAR CASE

INSTALL OUTER AND INNER LEVERS OF TRANSFER HIGH AND LOW SHIFT

(a) Install the shift inner lever.

(b) Install the washer and shift outer lever.

(c) Install the bolt, two plate washers, spring washer and nut.

HINT: Be carefull not to damage the oil seal lip.

ASSEMBLY OF TRANSFER

(See page TF-4)

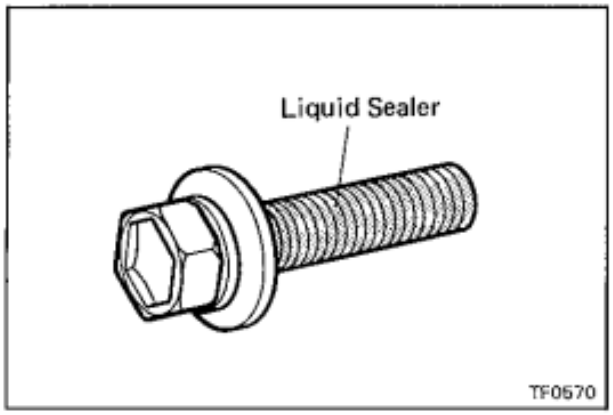

1. INSTALL TRANSFER FRONT CASE

(a) Clean the threads of the bolts and case with cleaning solvent.

(b) Apply liquid sealer to the bolt threads.

Sealant: Part No.08833-00070, THREE BOND 1324 or equivalent

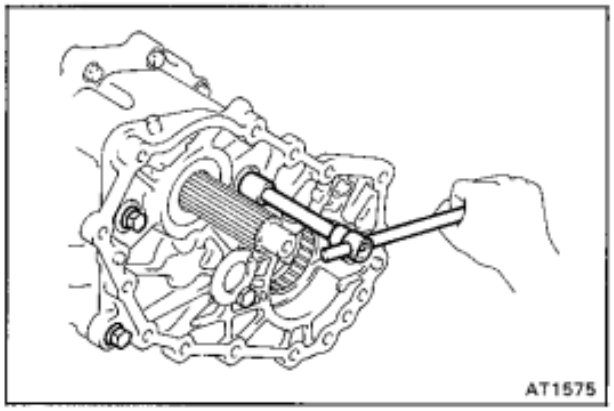

(c) Install a new gasket and transfer front case with the four bolts.

Torque: 650 kg-cm (47 ft-lb, 64 N·m)

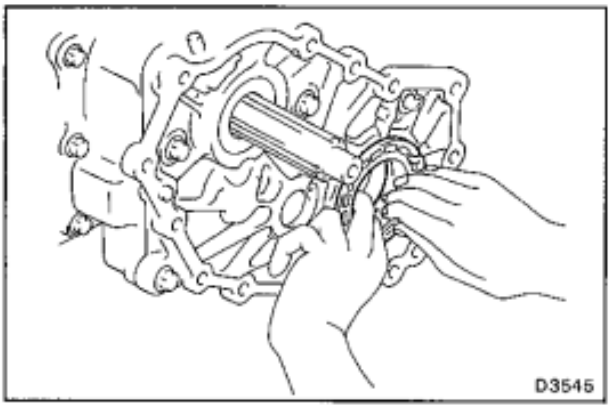

2. INSTALL REAR OUTPUT SHAFT FRONT BEARING RETAINER

Install the rear output shaft front bearing retainer.

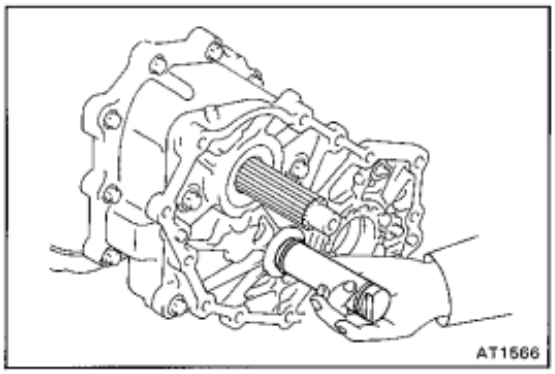

3. INSTALL IDLER GEAR SHAFT AND IDLER GEAR

(a) Apply gear oil to a new O-ring and install it to the idler gear shaft front side groove.

(b) Install the idler gear shaft to the transfer front case.

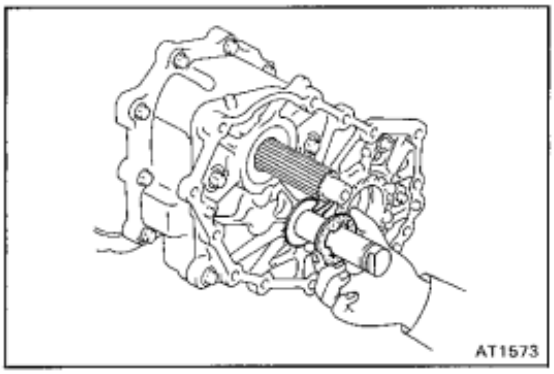

(c) Install the idler gear thrust washer.

HINT: Be sure that the protruding part of the washer fits in the case groove.

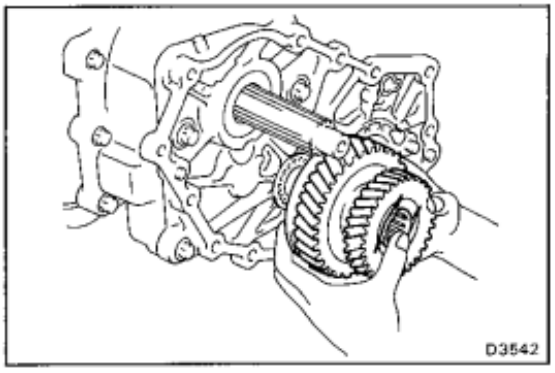

(d) Install the assembled idler gear, bearings and spacer to the idler gear shaft.

(e) Apply gear oil to a new O-ring and install it to the idler gear shaft rear side groove.

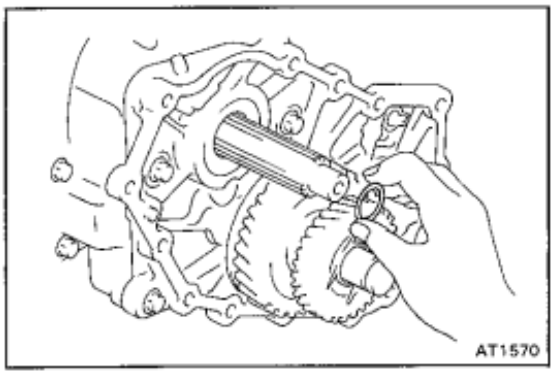

4. INSTALL O-RING TO TRANSMISSION OUTPUT SHAFT

Apply MP grease to a new O-ring and install it to the transmission output shaft.

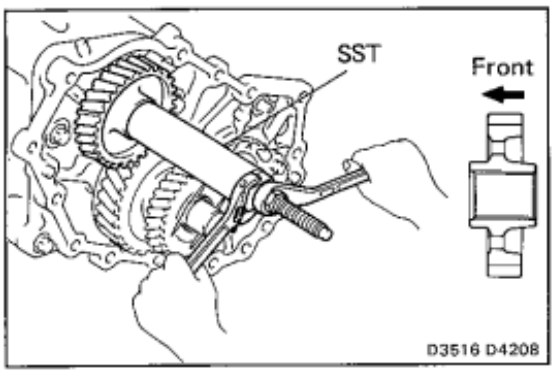

5. INSTALL TRANSFER INPUT GEAR

Using SST, install the transfer input gear.

SST 09309-36033

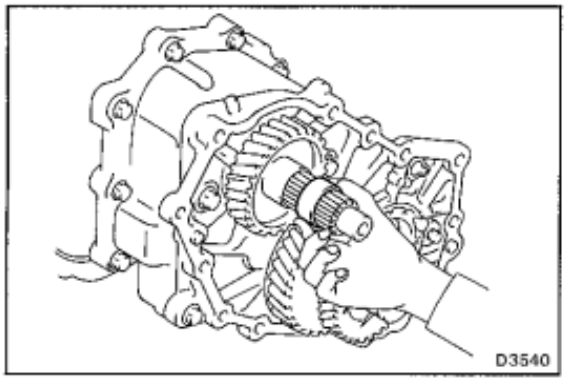

6. INSTALL POWER TAKE-OFF DRIVE GEAR

(a) Install the spacer to the transmission output shaft.

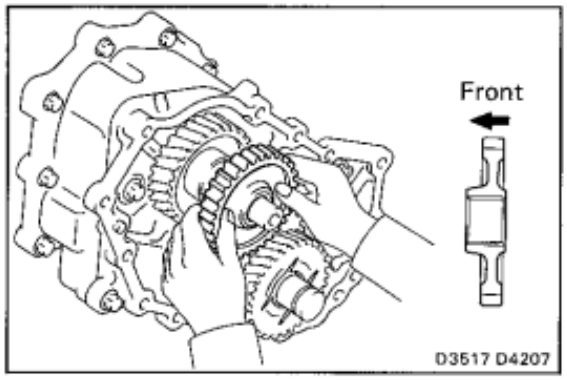

(b) Install the power take-off drive gear to the transmission output shaft.

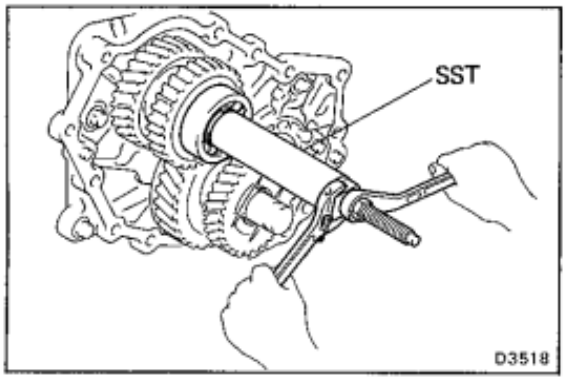

(c) Using SST, install the transfer input gear bearing.

SST 09309-36033

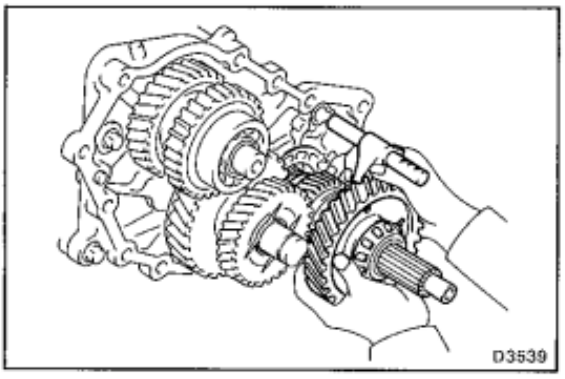

7. INSTALL REAR OUTPUT SHAFT ASSEMBLY WITH HIGH AND LOW SHIFT FORK SHAFT ASSEMBLY

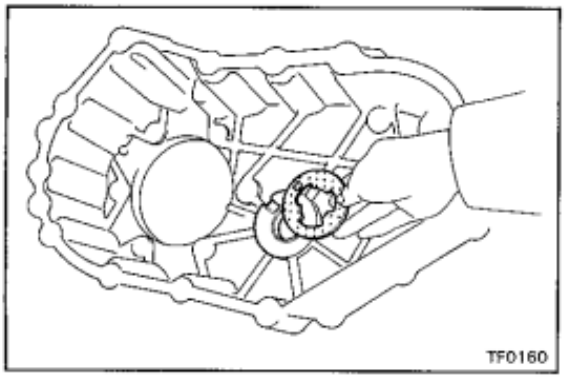

8. INSTALL TRANSFER REAR CASE

(a) Using MP grease, stick the thrust washer to the transfer rear case.

HINT: Be sure that the protruding part of the washer fits in the case groove.

(b) Place a new gasket on the front case.

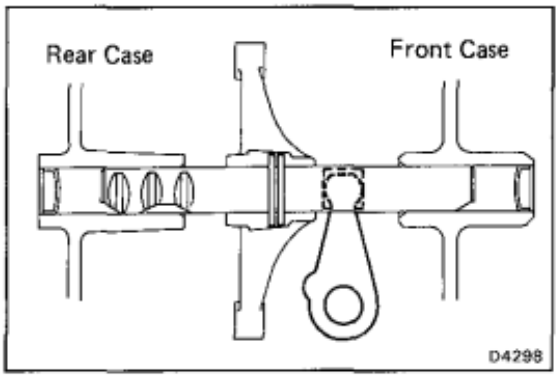

(c) While aligning the cutout of the shift fork shaft and shift inner lever, install the transfer rear case.

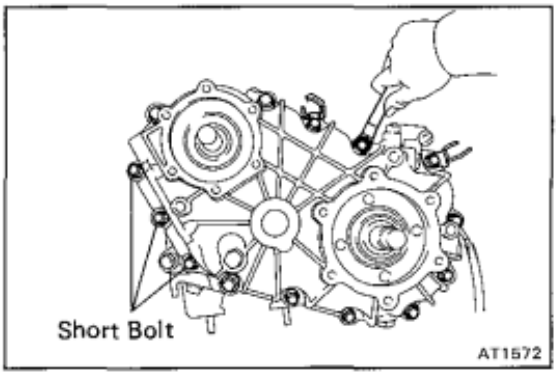

(d) Install and torque the fourteen bolts.

Torque:
17 mm head bolt 650 kg-cm (47 ft-lb, 64 N·m)
14 mm head bolt 400 kg-cm (29 ft-lb, 39 N·m)

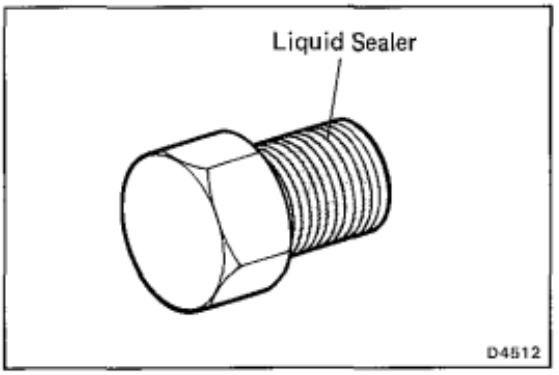

9. INSTALL LOCKING BALLS, SPRINGS AND SHIFT PLUGS

(a) Clean the threads of the plug and case with cleaning solvent.

(b) Apply liquid sealer to the plug threads.

Sealant: Part No.08833-00070, THREE BOND 1324 or equivalent

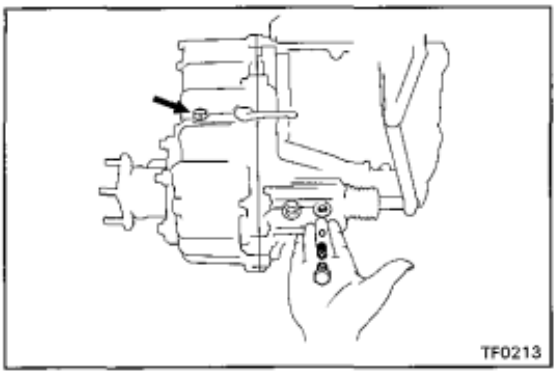

[Direct Shift Type]

Install the locking balls and springs, and torque the plugs.

Torque: 450 kg-cm (33 ft-lb, 44 N·m)

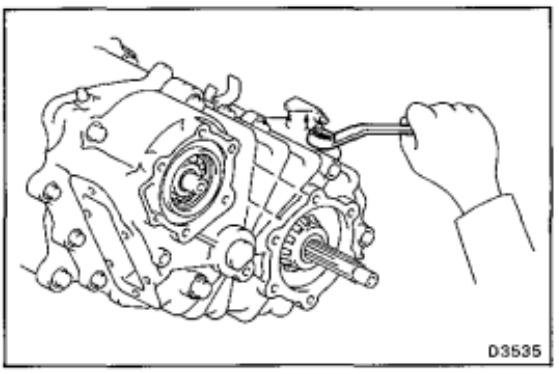

[Vacuum Shift Type]

Install the locking ball and spring, and torque the plug.

Torque: 450 kg-cm (33 ft-lb, 44 N·m)

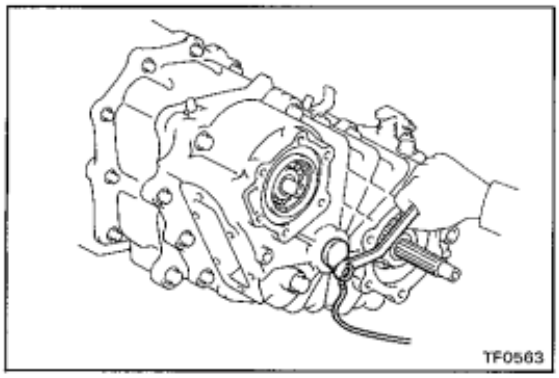

10. INSTALL IDLER GEAR SHAFT LOCK PLATE

Install the lock plate and bolt. Torque the bolt.

Torque: 210 kg-cm (15 ft-lb, 21 N·m)

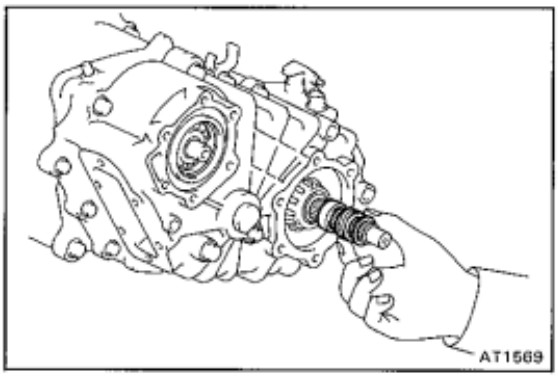

11. INSTALL SPACER, SPEEDOMETER DRIVE GEAR AND WASHER

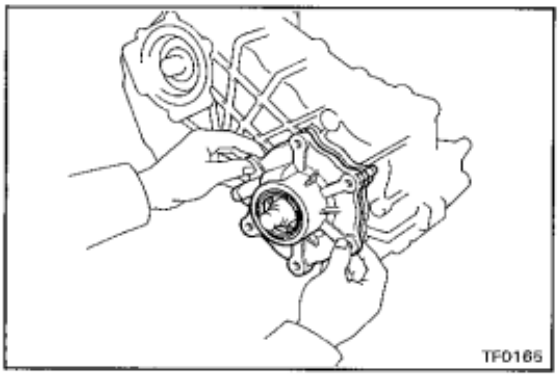

12. ADJUST REAR OUTPUT SHAFT BEARINGS PRELOAD

(a) Align the rib with the transfer rear case.

(b) Install the rear bearing retainer.

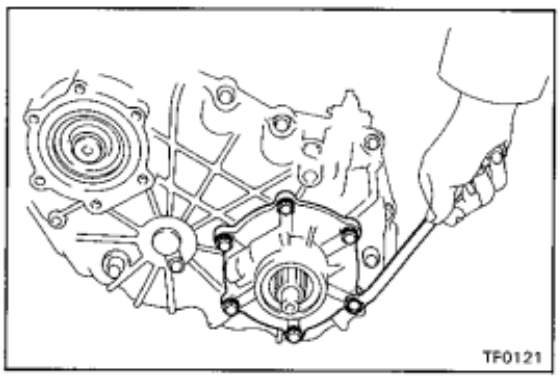

(c) Install and torque the six bolts.

Torque: 350 kg-cm (25 ft-lb, 34 N·m)

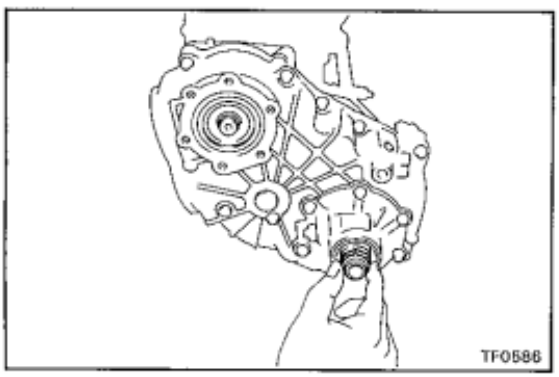

(d) Temporarily install a new rear companion flange lock nut.

(e) Shift the outer lever of the transfer high and low shift lever to N position.

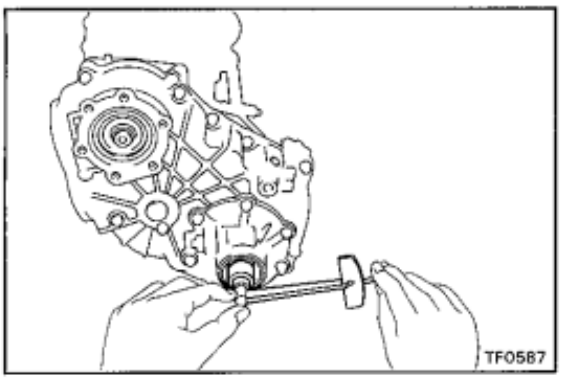

(f) Using a torque meter, measure the preload of the rear output shaft bearings.

Torque: (at starting)

New bearing	**15 — 24.7 kg-cm (13.0 — 21.4 in.-lb, 1.5 — 2.4 N·m)**
Reused bearing	**7 — 12 kg-cm (6.1 — 10.4 in.-lb, 0.7 — 1.2 N·m)**

If the preload is not within specification, remove the outer race of the rear output shaft rear bearing with SST.

SST 09514-35011

Reselect an adjusting shim.

Mark	Thickness mm(in.)	Mark	Thickness mm(in.)
0	0.15 (0.0059)	10	1.00 (0.0394)
4	0.40 (0.0157)	11	1.10 (0.0433)
5	0.50 (0.0197)	12	1.20 (0.0472)
6	0.60 (0.0236)	13	1.30 (0.0512)
7	0.70 (0.0276)	14	1.40 (0.0551)
8	0.80 (0.0315)	15	1.50 (0.0591)
9	0.90 (0.0354)		

HINT:

- If the preload is more than specification decrease the thickness of the shim, if less than specification, increase the thickness of shim.
- The preload will change about 10.0 kg-cm (8.7 in.-lb, 1.0 N·m) with each shim thickness.

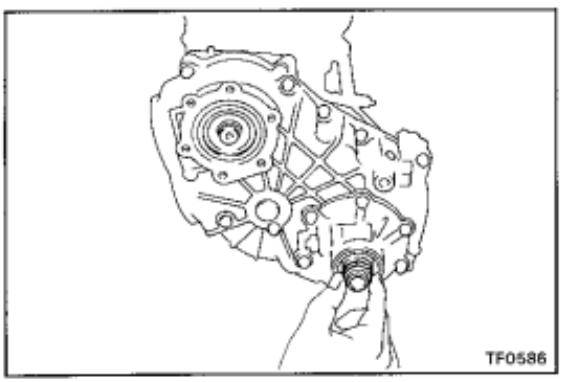

(g) Remove the rear companion flange lock nut.

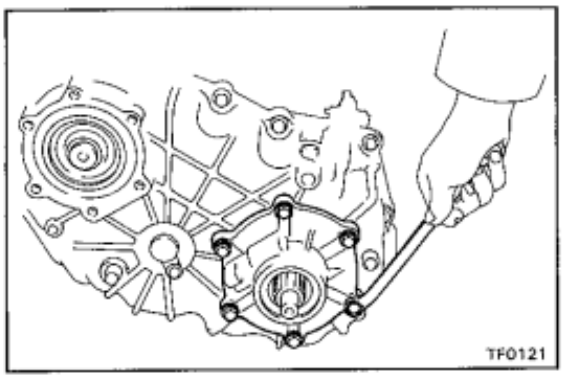

13. REMOVE REAR BEARING RETAINER

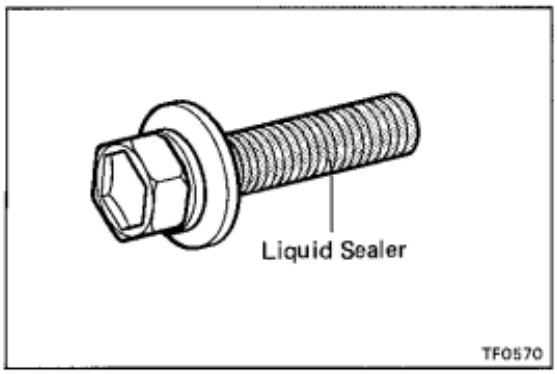

14. INSTALL REAR BEARING RETAINER

(a) Clean the threads of the bolts and case with cleaner.

(b) Apply liquid sealer to the bolts threads.

Sealant: Part No.08833-00070, THREE BOND 1324 or equivalent

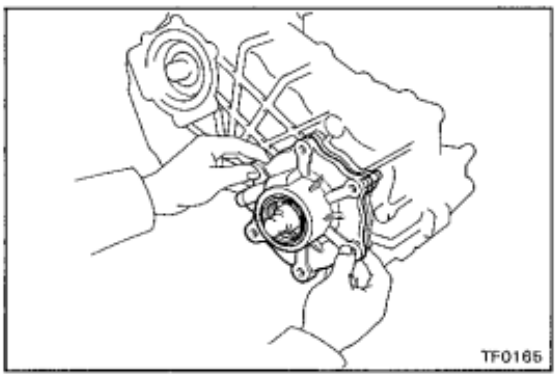

(c) Place a new gasket on the rear case.

(d) Align the rib with the transfer rear case.

(e) Install the rear bearing retainer.

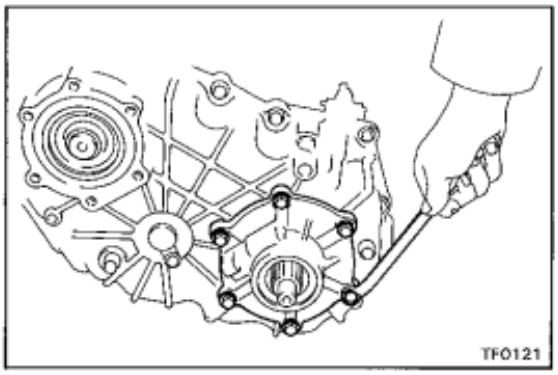

(f) Install and torque the six bolts.

Torque: 350 kg-cm (25 ft-lb, 34 N·m)

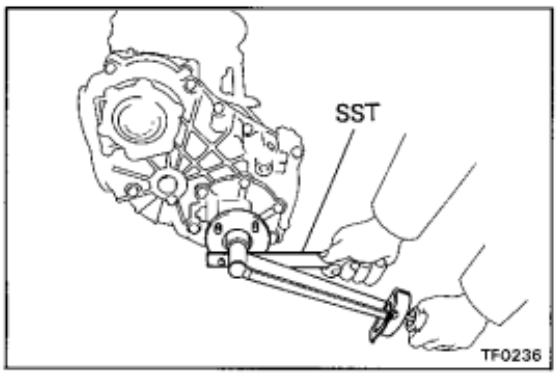

15. INSTALL REAR COMPANION FLANGE

(a) Install the companion flange and plate washer.

(b) Using SST and two nuts to hold the companion flange, install a new companion flange lock nut.

SST 09330-00021

Torque: 1,300 kg-cm (94 ft-lb, 127 N·m)

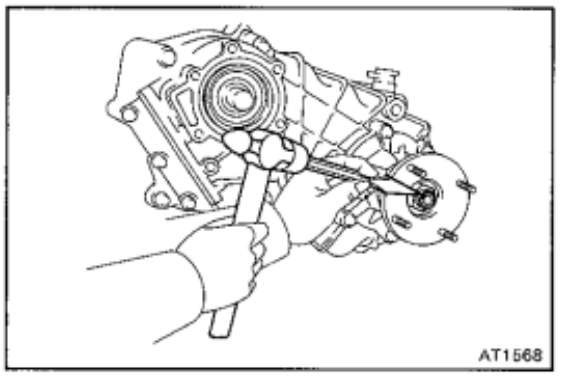

(c) Using a hammer and chisel, stake the companion flange lock nut.

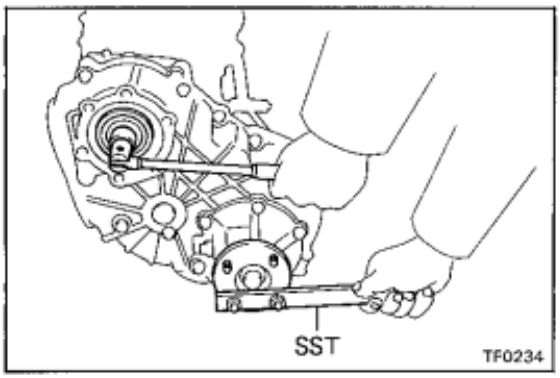

16. INSTALL TRANSMISSION OUTPUT SHAFT LOCK NUT

(a) Shift the outer lever of the transfer high and low shift lever to H2 or L4 position.

(b) Install the plate washer.

(c) Using SST and two nuts to hold the companion flange, install a new transmission output shaft lock nut.

SST 09330-00021

Torque: 1,300 kg-cm (94 ft-lb, 127 N·m)

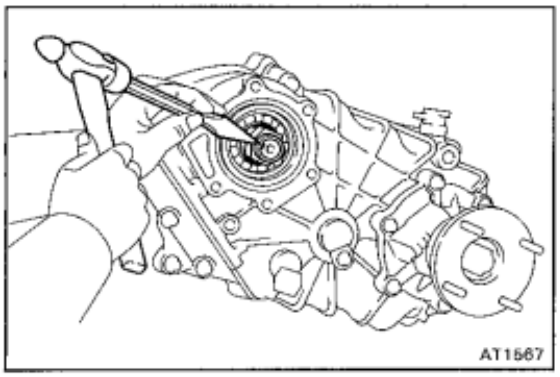

(d) Using a hammer and chisel, stake the transmission output shaft lock nut.

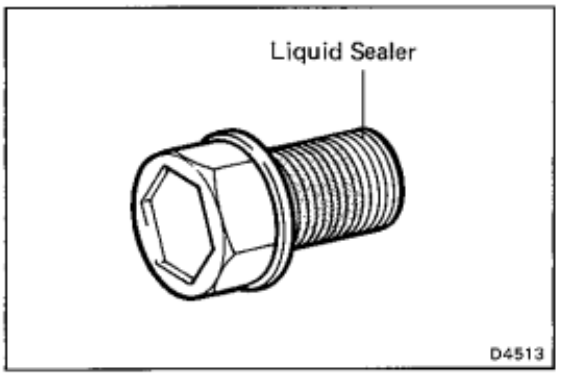

17. INSTALL TRANSFER NO.2 CASE COVER

(a) Clean the threads of the bolts and case with cleaning solvent.

(b) Apply liquid sealer to the bolt threads.

Sealant: Part No.08833-00070, THREE BOND 1324 or equivalent

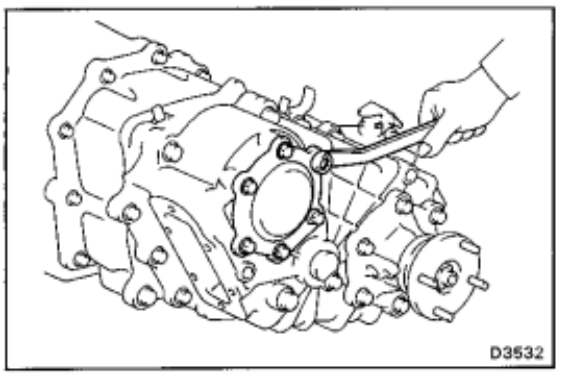

(c) Install a new gasket and the transfer No.2 case cover with the six bolts.

(d) Torque the bolts.

Torque: 155 kg-cm (11 ft-lb, 15 N·m)

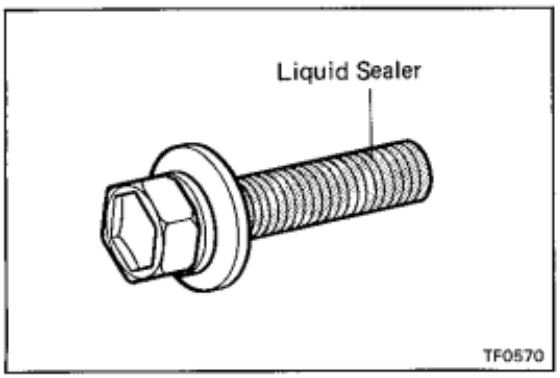

18. INSTALL POWER TAKE-OFF COVER

(a) Clean the threads of the two bolts and case with cleaning solvent.

(b) Apply liquid sealer to the two bolts threads.

Sealant: Part No.08833-00070, THREE BOND 1324 or equivalent

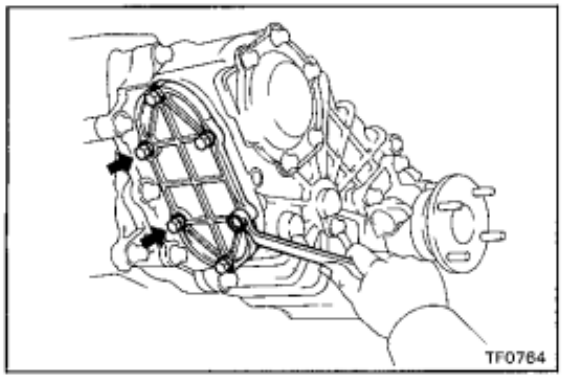

(c) Install a new gasket and the power take-off cover with the two sealer coated bolts indicated by arrows and four bolts as shown.

Torque:

Sealer coated bolts	**170 kg-cm (12 ft-lb, 17 N·m)**
Other bolts	**195 kg-cm (14 ft-lb, 19 N·m)**

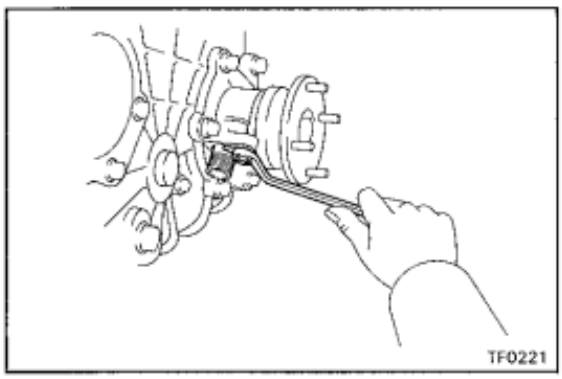

19. INSTALL SPEEDOMETER DRIVEN GEAR

(a) Apply gear oil to a new O-ring.

(b) Install the O-ring to the speedometer driven gear.

(c) Install the speedometer driven gear with lock plate and bolt.

Torque: 130 kg-cm (9 ft-lb, 13 N·m)

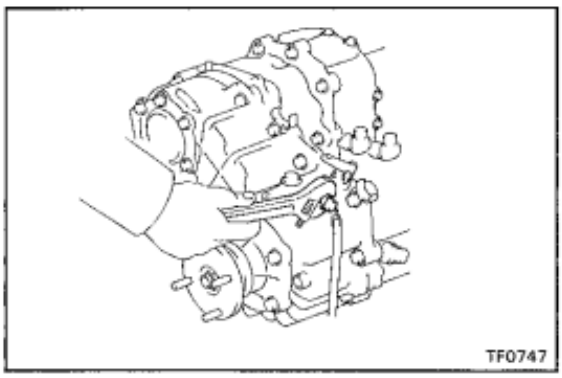

20. INSTALL TRANSFER L4 POSITION SWITCH

(a) Install the transfer L4 position switch.

Torque: 250 kg-cm (18 ft-lb, 25 N·m)

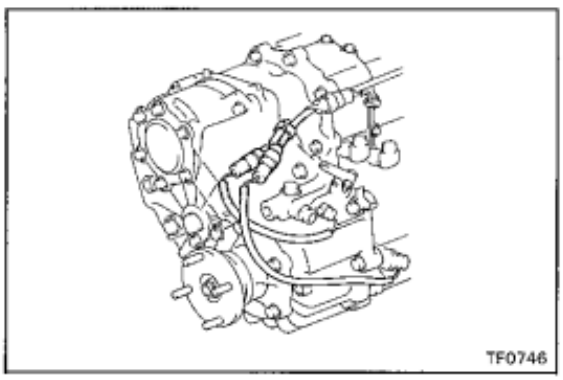

(b) Connect the two connectors.

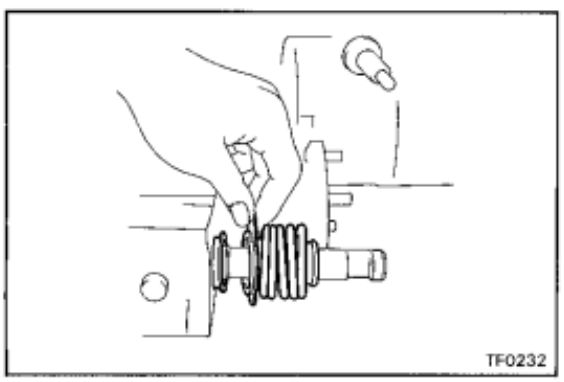

21. (Direct Shift Type)
INSTALL DUST BOOT

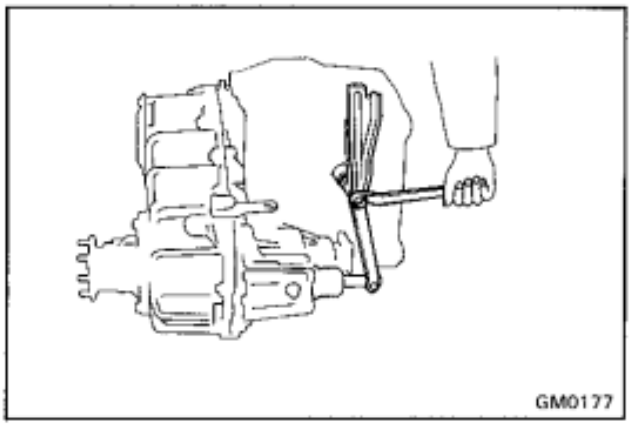

22. **(Direct Shift Type)**
INSTALL TRANSFER FRONT DRIVE SHIFT LEVER

TRANSFER

Specifications

Rear output shaft				
High gear journal diameter		Limit	40.009 mm	1.5752 in.
Low gear journal diameter		Limit	40.009 mm	1.5752 in.
Runout			0.03 mm	0.0012 in.
High and low gear oil clearance		STD	0.019 – 0.068 mm	0.0007 – 0.0027 in.
		Limit	0.068 mm	0.0027 in.
High and low gear thrust clearance		STD	0.10 – 0.25 mm	0.0039 – 0.0098 in.
		Limit	0.25 mm	0.0098 in.
Shift fork to hub sleeve clearance		Limit	1.0 mm	0.039 in.
Rear output shaft snap ring thickness		Mark		
		11	2.30 – 2.35 mm	0.0906 – 0.0925 in.
		17	2.60 – 2.65 mm	0.1024 – 0.1043 in.
Idler gear thrust clearance		STD	0.275 – 0.625 mm	0.0108 – 0.0246 in.
		Limit	0.625 mm	0.0246 in.
Rear output shaft preload	New bearing		15 – 24.7 kg-cm (13.0 – 21.4 in.-lb, 1.5 – 2.4 N·m)	
	Reused bearing		7 – 12 kg-cm (6.1 – 10.4 in.-lb, 0.7 – 1.2 N·m)	
Rear output shaft preload adjusting shim		Mark		
		0	0.15 mm	0.0059 in.
		4	0.4 mm	0.016 in.
		5	0.5 mm	0.020 in.
		6	0.6 mm	0.024 in.
		7	0.7 mm	0.028 in.
		8	0.8 mm	0.031 in.
		9	0.9 mm	0.035 in.
		10	1.0 mm	0.039 in.
		11	1.1 mm	0.043 in.
		12	1.2 mm	0.047 in.
		13	1.3 mm	0.051 in.
		14	1.4 mm	0.055 in.
		15	1.5 mm	0.059 in.
Oil seal drive in depth				
Speedometer driven gear			20 mm	0.79 in.

Torque Specifications

Part tightened		kg-cm	ft-lb	N·m
Transfer front case × Transmission case	17 mm	650	47	64
	14 mm	400	29	39
Transfer front case × Transfer rear case	17 mm	650	47	64
	14 mm	400	29	39
Idler gear shaft lock plate bolt		210	15	21
Front companion flange lock nut		1,300	94	127
Transfer rear case × Transfer case cover No.2		155	11	15
Transfer rear case × Rear output shaft rear bearing retainer		350	25	34
Rear companion flange lock nut		1,300	94	127
Transmission output shaft lock nut		1,300	94	127
Transfer rear case × Power take-off cover				
	With liquid sealer	170	12	17
	Others	195	14	19
Transfer indicator switch		450	33	44
Speedometer driven gear lock plate bolt		130	9	13
Diaphragm cylinder body × Transfer front case		185	13	18
Diaphragm cylinder cover × Diaphragm cylinder body		185	13	18
Diaphragm cylinder body cover × Diaphragm cylinder cover		75	65 in.-lb	7.4
Suction tube × Diaphragm cylinder body cover		375	27	37
Diaphragm push rod nut		375	27	37

PRECAUTIONS

Be careful not to grip the propeller shaft tube too tightly in the vise as this will cause deformation.

TROUBLESHOOTING

Problem	Possible cause	Remedy	Page
Noise	Sleeve yoke spline worn	Replace sleeve yoke	PR-4
	Spider bearing worn or stuck	Replace spider bearing	PR-4
Vibration	Propeller shaft runout	Replace propeller shaft	PR-3
	Propeller shaft imbalance	Balance propeller shaft	
	Sleeve yoke spline stuck	Replace sleeve yoke	PR-4

PROPELLER SHAFT

COMPONENTS

- **RJ, LJ Series (For Front and Rear Propeller Shaft)**
- **FJ, PZJ, HZJ Series (For Front Propeller Shaft)**

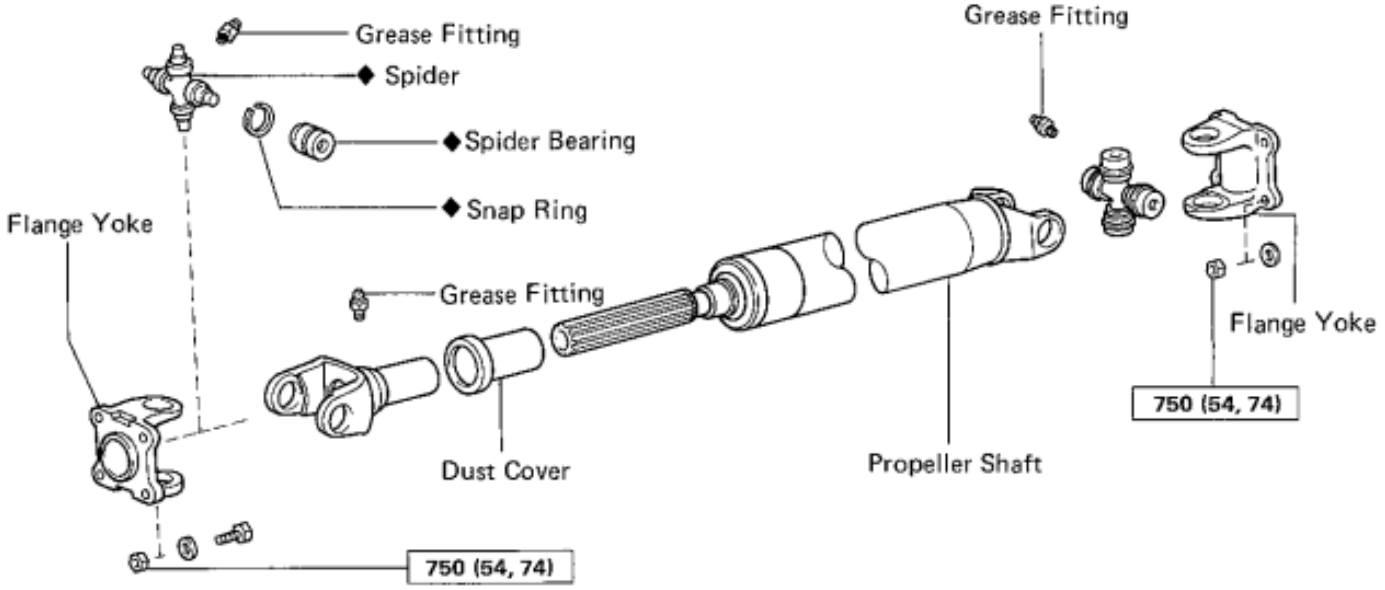

- **BJ, HJ Series (For Front and Rear Propeller Shaft)**
- **FJ, PZJ, HZJ Series (For Rear Propeller Shaft)**

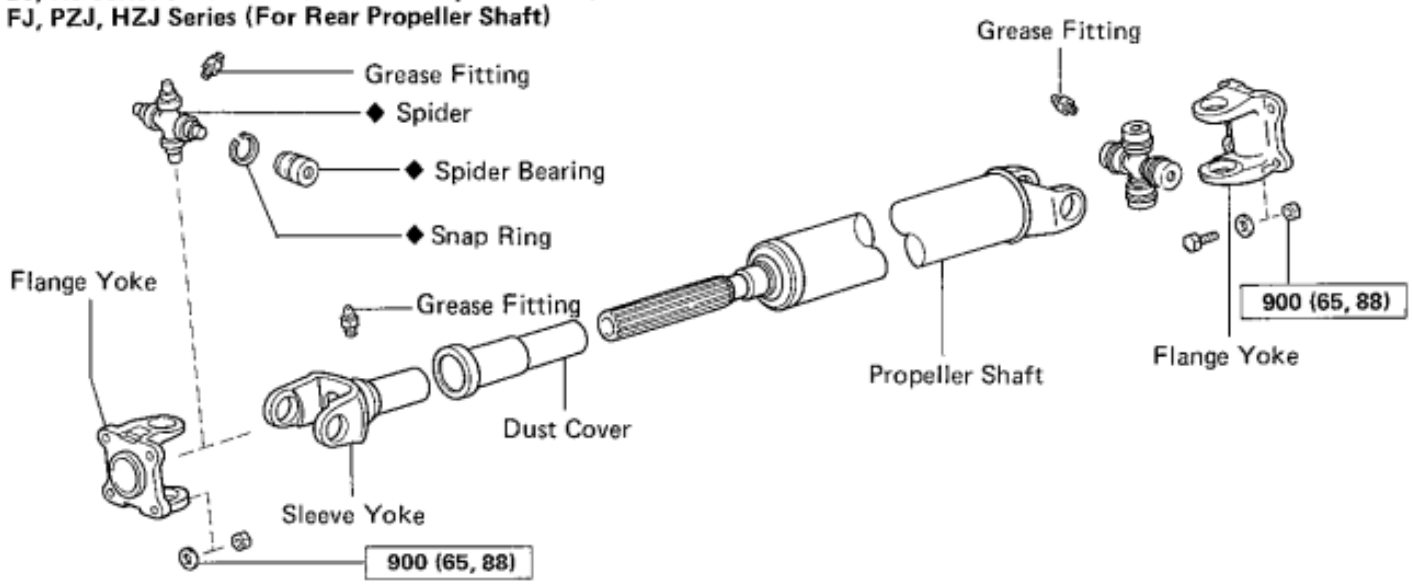

◆ Non-reusable part

kg-cm (ft-lb, N·m) : Specified torque

PR0278
PR0279

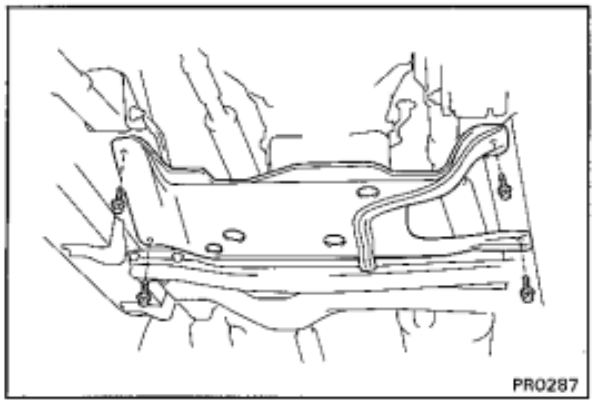
PR0287

REMOVAL OF FRONT AND REAR PROPELLER SHAFT

1. REMOVE UNDER COVER

Remove four bolts and the under cover.

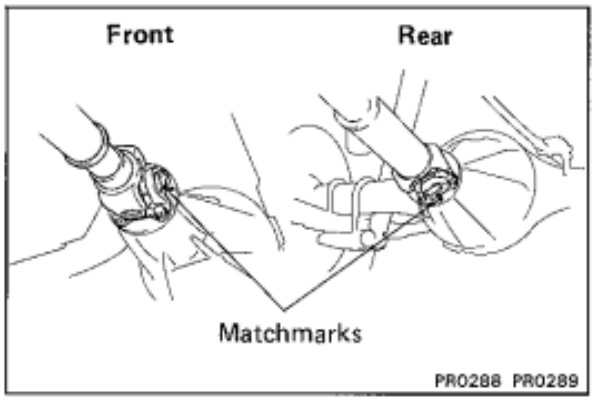

PR0288 PR0289

2. DISCONNECT PROPELLER SHAFT FLANGE FROM COMPANION FLANGE ON DIFFERENTIAL

(a) Put matchmarks on the flanges.

(b) Remove the four bolts and nuts.

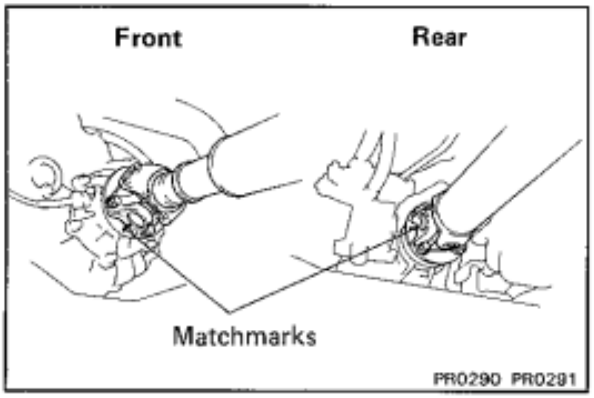

PR0290 PR0291

3. DISCONNECT PROPELLER SHAFT FLANGE FROM COMPANION FLANGE ON TRANSFER

(a) Put matchmarks on the flange.

(b) Remove the four nuts.

(c) Remove the propeller shaft.

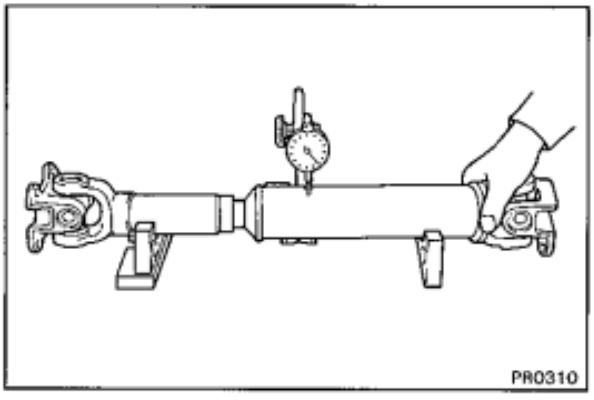
PR0310

INSPECTION OF PROPELLER SHAFT COMPONENTS

1. INSPECT FRONT AND REAR PROPELLER SHAFTS FOR DAMAGE OR RUNOUT

If shaft runout is greater than maximum, replace the shaft.

Maximum runout: 0.8 mm (0.031 in.)

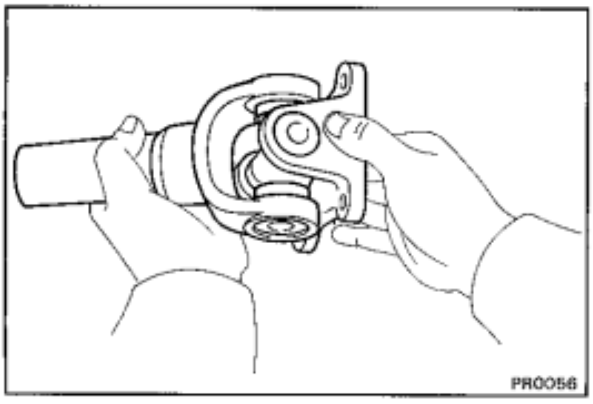
PR0056

2. INSPECT SPIDER BEARINGS

(a) Inspect the spider bearings for wear or damage.

(b) Check the spider bearing axial play by turning the yoke while holding the shaft tightly.

Bearing axial play: Less than 0.05 mm (0.0020 in.)

If necessary, replace the spider bearing.

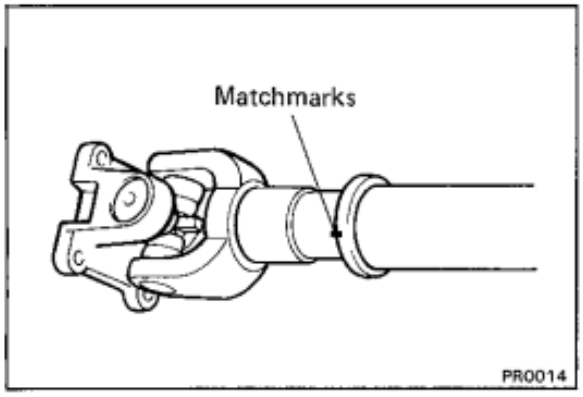

DISASSEMBLY OF PROPELLER SHAFT

1. REMOVE SLEEVE YOKE FROM PROPELLER SHAFT

(a) Place matchmarks on the sleeve yoke and shaft.

(b) Pull out the sleeve yoke from the shaft.

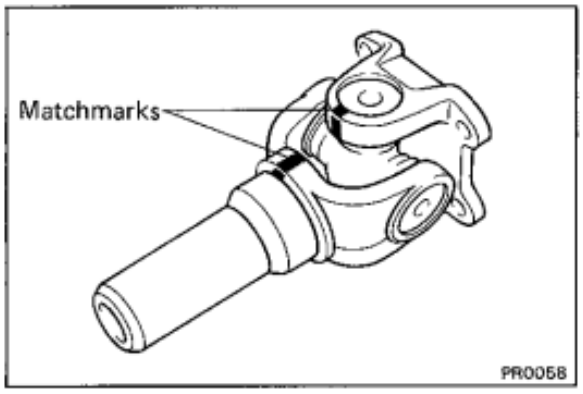

2. REMOVE SPIDER BEARING

(a) Put matchmarks on the sleeve yoke and flange.

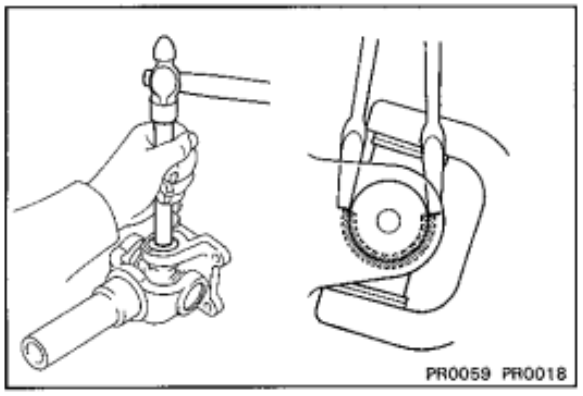

(b) Slightly tap in the bearing outer races.

(c) Using two screwdrivers, remove the four snap rings from the grooves.

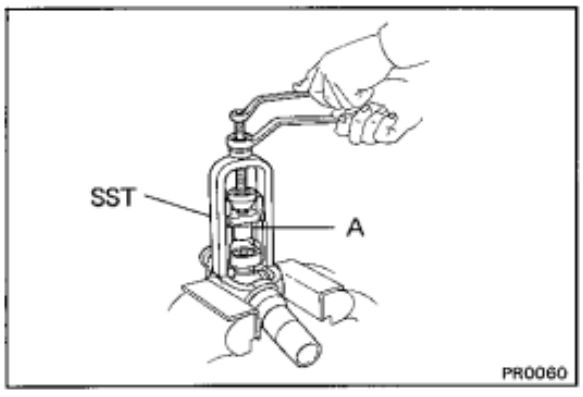

(d) Using SST, push out the bearing from the flange.

SST 09332-25010

HINT: Sufficiently raise the part indicated by A so that it does not come into contact with the bearing.

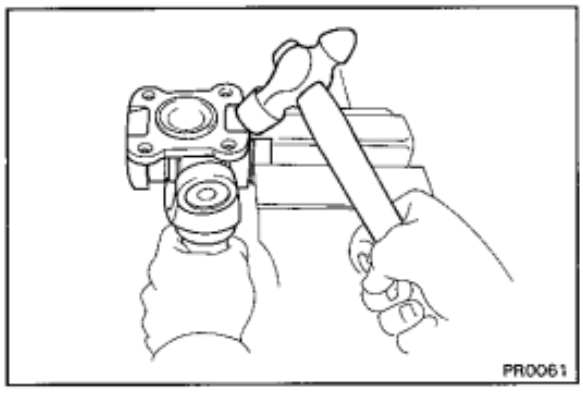

(e) Clamp the bearing outer race in a vise and tap off the flange with a hammer.

HINT: Remove the bearing on the opposite side in the same procedure.

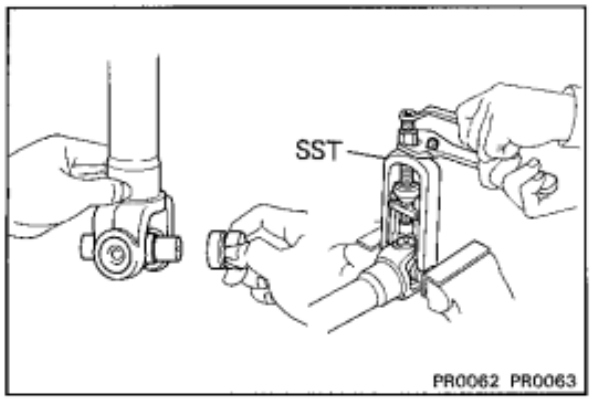

(f) Install the two removed bearing outer races to the spider.

(g) Using SST, push out the bearing from the yoke.

SST 09332-25010

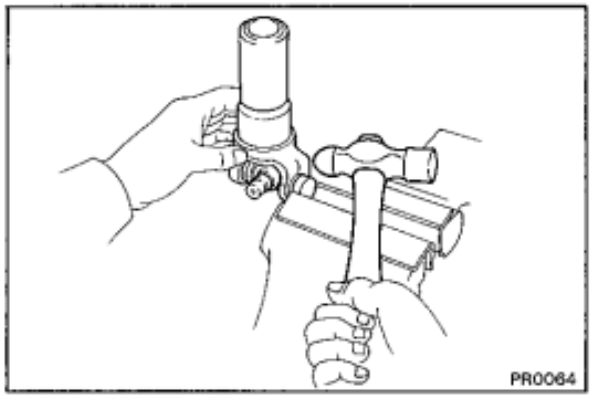

(h) Clamp the outer bearing race in a vise and tap off the yoke with a hammer.

HINT: Remove the bearing on the opposite side in the same procedure.

ASSEMBLY OF PROPELLER SHAFT

(See page PR-2)

HINT: When replacing the spider, be sure that the grease fitting assembly hole is facing in the direction shown in figure.

SPIDER GREASE FITTING ASSEMBLY DIRECTION
Front Propeller Shaft: FJ, PZJ, HZJ, RJ, LJ Series
Rear Propeller Shaft: RJ, LJ Series

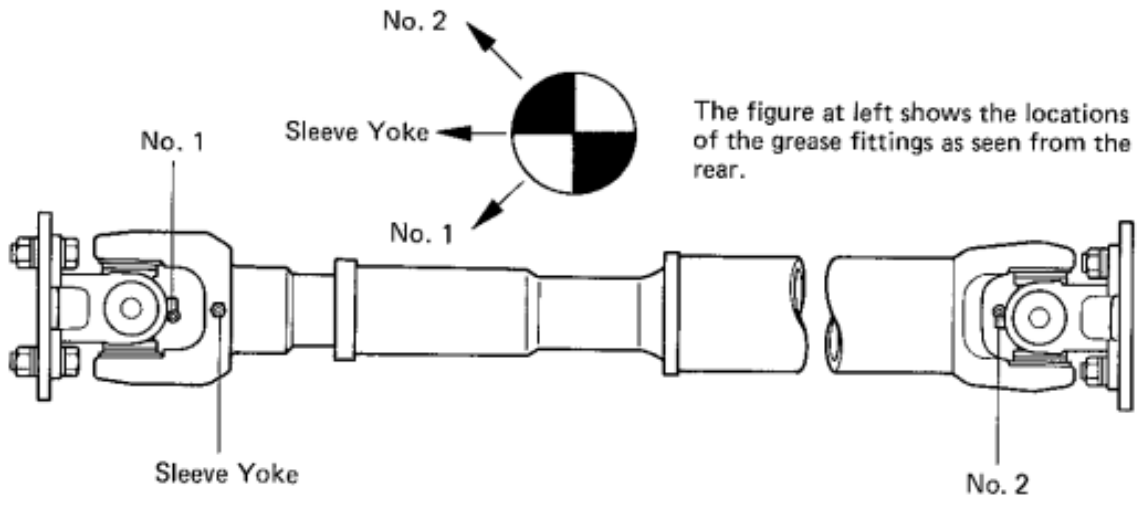

The figure at left shows the locations of the grease fittings as seen from the rear.

PR0284

SPIDER GREASE FITTING ASSEMBLY DIRECTION
Front Propeller Shaft: BJ, HJ Series
Rear Propeller Shaft: FJ, PZJ, HZJ, BJ, HJ Series

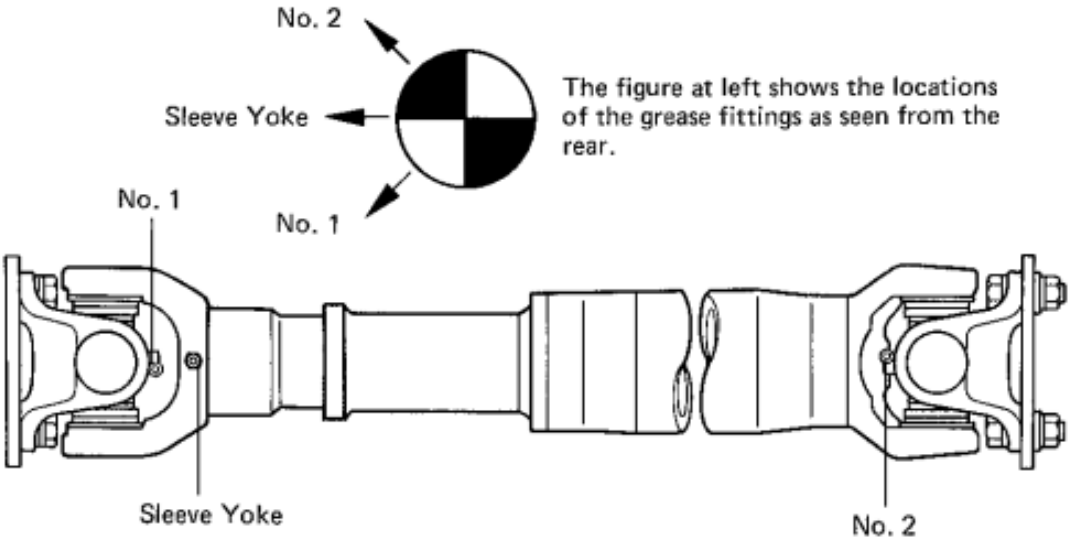

The figure at left shows the locations of the grease fittings as seen from the rear.

PR0285

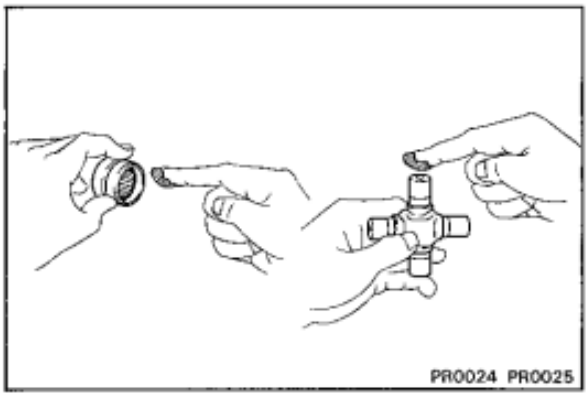

PR0024 PR0025

1. INSTALL SPIDER BEARINGS

(a) Apply MP grease to the spider and bearings.

HINT: Be careful not to apply too much grease.

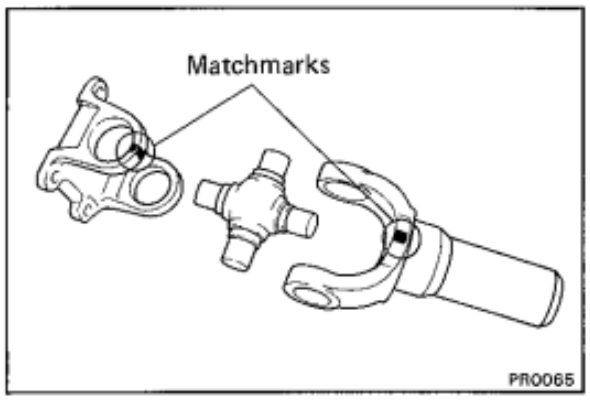

PR0065

(b) Align the matchmarks on the yoke and flange.

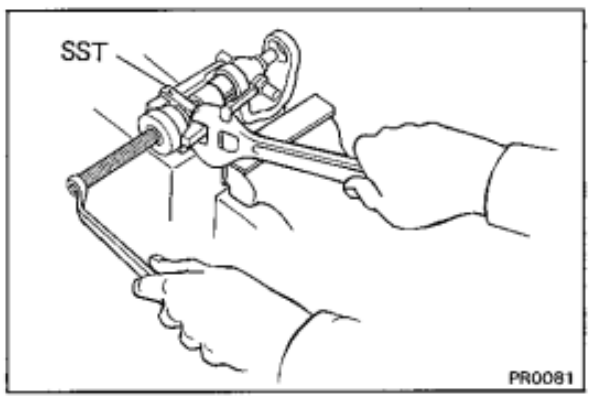

PR0081

(c) Fit the new spider into the yoke.

(d) Using SST, install the new bearing on the spider.

SST 09332-25010

- RJ, LJ Series (For Front and Rear Propeller Shaft)
- FJ, PZJ, HZJ Series (For Front Propeller Shaft)

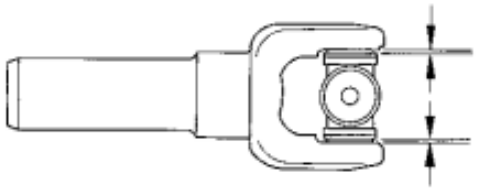

- BJ, HJ Series (For Front and Rear Propeller Shaft)
- FJ, PZJ, HZJ Series (For Rear Propeller Shaft)

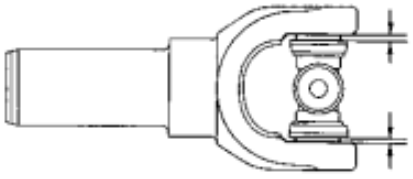

PR0286
PR0068

(e) Using SST, adjust both bearings so that the snap ring grooves are at maximum and equal widths.

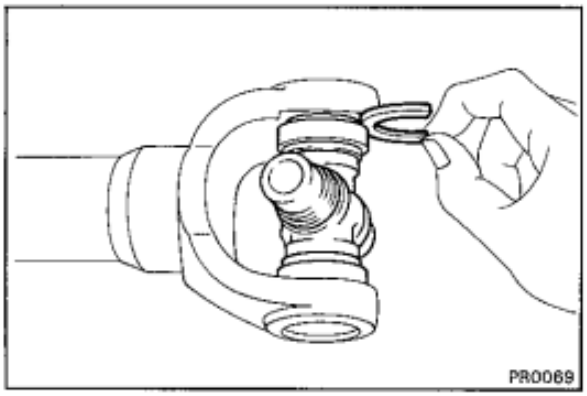

PR0069

(f) Install two snap rings of equal thickness which will allow 0 — 0.05 mm (0 — 0.0020 in.) axial play.

HINT: Do not reuse the snap rings.

Thickness of snap ring

Front Propeller Shaft: FJ, PZJ, HZJ, RJ, LJ Series

Rear Propeller Shaft: RJ, LJ Series

Color	Mark	Thickness mm (in.)
—	1	2.100 — 2.150 (0.0827 — 0.0846)
—	2	2.150 — 2.200 (0.0846 — 0.0866)
—	3	2.200 — 2.250 (0.0866 — 0.0886)
Brown	—	2.250 — 2.300 (0.0886 — 0.0906)
Blue	—	2.300 — 2.350 (0.0906 — 0.0925)
—	6	2.350 — 2.400 (0.0925 — 0.0945)
—	7	2.400 — 2.450 (0.0945 — 0.0965)
—	8	2.450 — 2.500 (0.0965 — 0.0984)

Front Propeller Shaft: BJ, HJ Series

Rear Propeller Shaft: FJ, PZJ, HZJ, BJ, HJ Series

Thickness mm (in.)	Color
2.00 (0.0787)	—
2.03 (0.0799)	Brown
2.06 (0.0811)	Blue
2.09 (0.0823)	—

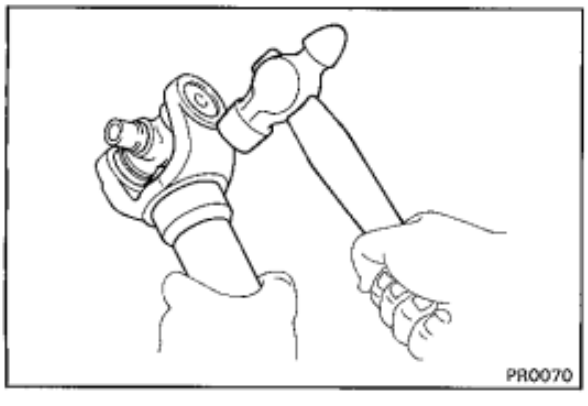

PR0070

(g) Using a hammer, tap the yoke until there is no clearance between the bearing outer race and snap ring.

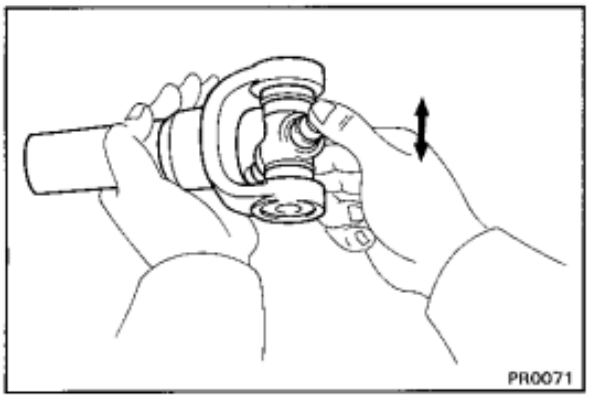
PR0071

(h) Check that the spider bearing moves smoothly.

(i) Check the spider bearing axial play.

Bearing axial play: Less than 0.05 mm (0.0020 in.)

HINT: Install new spider bearings on the flange side in the procedure described above.

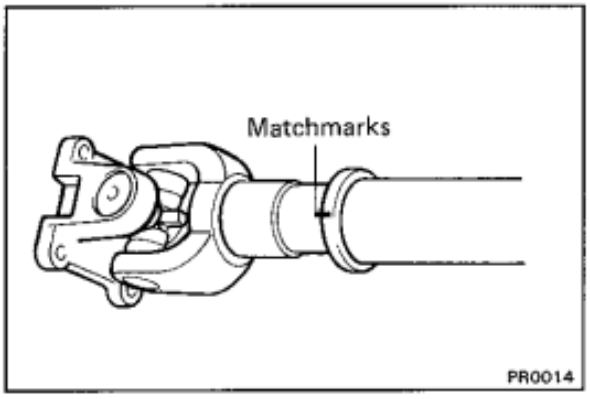

PR0014

2. INSERT SLEEVE YOKE INTO PROPELLER SHAFT

(a) Apply MP grease to the propeller shaft spline and sleeve yoke sliding surface.

(b) Align the matchmarks on the sleeve and propeller shaft.

(c) Install the propeller shaft into the sleeve yoke.

INSTALLATION OF FRONT AND REAR PROPELLER SHAFTS

1. CONNECT PROPELLER SHAFT FLANGE TO COMPANION FLANGE ON TRANSFER

(a) Align the matchmarks on the flanges and connect the flanges with four nuts.

(b) Torque the nuts.

Torque:

Front Propeller Shaft

BJ, HJ Series: 900 kg-cm (65 ft-lb, 88 N·m)
Others: 750 kg-cm (54 ft-lb, 74 N·m)

Rear Propeller Shaft

RJ, LJ Series: 750 kg-cm (54 ft-lb, 74 N·m)
Othes: 900 kg-cm (65 ft-lb, 88 N·m)

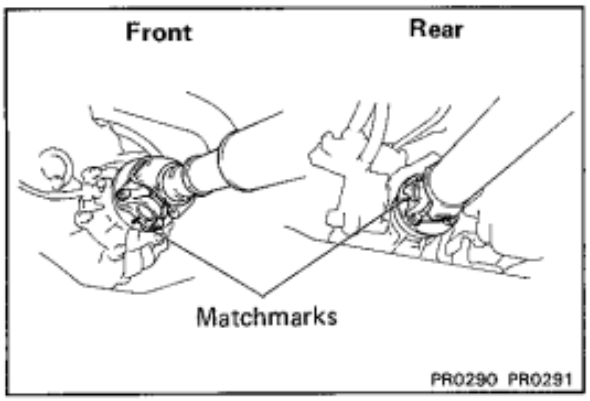

PR0290 PR0291

HINT: When installing the washers, put them properly in place.

2. CONNECT PROPELLER SHAFT FLANGE TO COMPANION FLANGE ON DIFFERENTIAL

(a) Align the matchmarks on the flanges and connect the flanges with four bolts and nuts.

(b) Torque the bolts and nuts.

Torque:

Front Propeller Shaft

BJ, HJ Series: 900 kg-cm (65 ft-lb, 88 N·m)
Others: 750 kg-cm (54 ft-lb, 74 N·m)

Rear Propeller Shaft

RJ, LJ Series: 750 kg-cm (54 ft-lb, 74 N·m)
Othes: 900 kg-cm (65 ft-lb, 88 N·m)

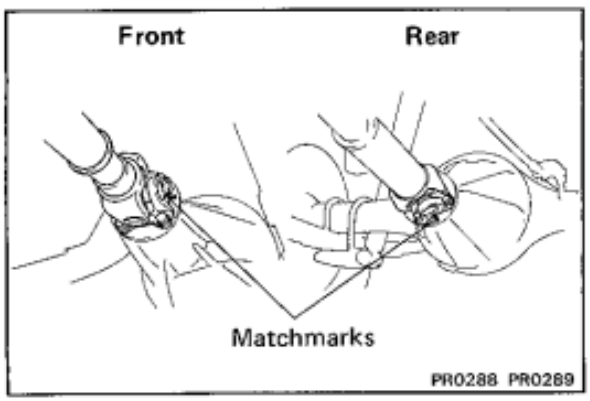

PR0288 PR0289

HINT: When installing the washers, put them properly in place.

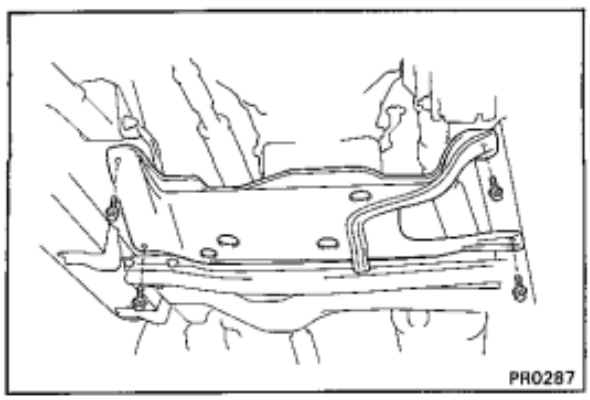
PR0287

3. INSTALL UNDER COVER

Install four bolts and the under cover.

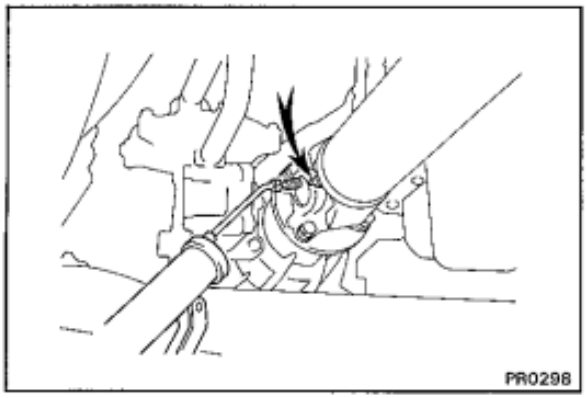

4. APPLY MP GREASE TO GREASE FITTING

Using a grease gun, pump the MP grease into each fitting until it begins to flow around the oil seal.

PROPELLER SHAFT

Specifications

Propeller shaft runout		Limit	0.8 mm	0.031 in.
Spider bearing axial play			Less than 0.05 mm (0.0020 in.)	
Snap ring thickness	Color	Mark		
Front propeller shaft	None	1	2.100 – 2.150 mm	0.0827 – 0.0846 in.
	None	2	2.150 – 2.200 mm	0.0846 – 0.0866 in.
	None	3	2.200 – 2.250 mm	0.0866 – 0.0886 in.
	Brown	None	2.250 – 2.300 mm	0.0886 – 0.0906 in.
	Blue	None	2.300 – 2.350 mm	0.0906 – 0.0925 in.
	None	6	2.350 – 2.400 mm	0.0925 – 0.0945 in.
	None	7	2.400 – 2.450 mm	0.0945 – 0.0965 in.
	None	8	2.450 – 2.500 mm	0.0965 – 0.0984 in.
Rear propeller shaft	None		2.00 mm	0.0787 in.
	Brown		2.03 mm	0.0799 in.
	Blue		2.06 mm	0.0811 in.
	None		2.09 mm	0.0823 in.

Torque Specifications

Part tightened	kg-cm	ft-lb	N·m
Front propeller shaft × Front differential	750	54	74
Front propeller shaft × Transfer	750	54	74
Rear propeller shaft × Rear differential	900	65	88
Rear propeller shaft × Transfer	900	65	88

TROUBLESHOOTING

Problem	Possible cause	Remedy	Page	
			Front	Rear
Wanders/pulls	Tire worn or improperly inflated	Replace tire or inflate tires to proper pressure	A-15	A-15
	Alignment incorrect	Check front wheel alignment	SA-3	—
	Front or rear suspension parts loosen or broken	Tighten or replace suspension parts	SA-87, 96	SA-192, 198
	Steering linkage loosen or worn	Tighten or replace steering linkage	SR-72, 76	—
	Steering gear out of adjustment or broken	Adjust or repair steering gear	SR-20, 62	—
Bottoming	Vehicle overloaded	Check loading		
	Shock absorber worn out	Replace shock absorber	SA-87, 96	SA-192, 198
	Spring weak	Replace spring	SA-87, 96	SA-192, 198
Way/pitches	Tires improperly inflated	Inflated tires to proper pressure	A-15	A-15
	Stabilizer bar bent or broken	Inspect stabilizer bar	SA-87, 96	SA-192, 198
	Shock absorber worn out	Replace shock absorber	SA-87, 93	SA-192, 198
Front wheel shimmy	Tires worn or improperly inflated	Replace tire or inflate tires to proper pressure	A-15	—
	Wheels out of balance	Balance wheels		
	Shock absorber worn out	Replace shock absorber	SA-87, 96	—
	Wheel alignment incorrect	Check front wheel alignment	SA-3	—
	Hub bearings worn	Replace hub bearings	SA-29	—
	Steering gear out of adjustment or broken	Adjust or repair steering gear	SR-20, 62	—
Abnormal tire wear	Tires improperly inflated	Inflated tire to proper pressure	A-15	A-15
	Shock absorbers worn out	Replace shock absorber	SA-87, 96	SA-192, 198
	Wheel alignment incorrect	Check wheel alignment	SA-3	—
	Suspension parts worn	Replace suspension parts	SA-87, 96	SA-192, 198
Oil leak from axle	Oil seals worn or damaged	Replace oil seal	SA-38	—
	Bearing retainer loose	Replace retainer	—	SA-108, 116
	Axle housing cracked	Repair as necessary	—	SA-108, 116
Oil leak from pinion shaft	Oil level too high or wrong grade	Drain and replace oil	SA-50	SA-125, 138
	Oil seal worn or damaged	Replace oil seal	SA-50	SA-125, 138
	Companion flange loose or damaged	Tighten or replace bearings	SA-50	SA-125, 138
Noises in axle	Oil level low or wrong grade	Drain and replace oil	SA-50	SA-125, 138
	Excessive backlash between pinion and ring or side gear	Check backlash	SA-60	SA-130, 146
	Ring, pinion or side gears worn or chipped	Inspect gears	SA-60	SA-130, 146
	Pinion shaft bearing worn	Replace bearing	SA-34	SA-130, 146
	Axle shaft bearing worn	Replace bearing	SA-29	SA-108, 116
	Differential bearing loose or worn	Tighten or replace bearings	SA-50	SA-125, 138

WHEEL ALIGNMENT

1. MAKE FOLLOWING CHECKS AND CORRECT ANY PROBLEMS

(a) Check the tires for wear, size and proper inflation pressure.

Cold tire inflation pressure: See page A-15

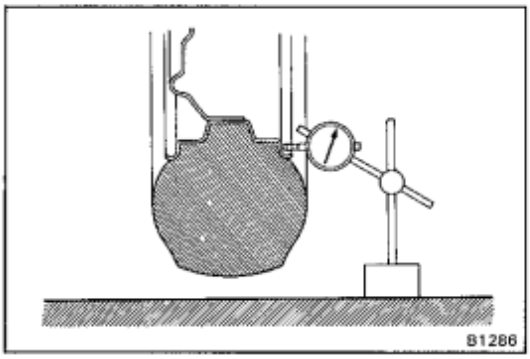

(b) Check the wheel runout.

Lateral runout: 1.2 mm (0.047 in.)

(c) Check the front wheel bearings for looseness.

(d) Check the front suspension for looseness.

(e) Check the steering linkage for looseness.

(f) Use the standard bounce test to check that the front absorbers work properly.

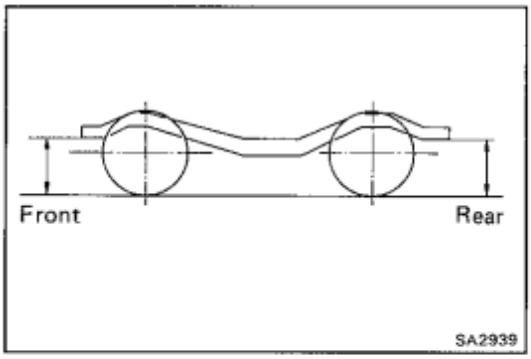

2. MEASURE CHASSIS GROUND CLEARANCE

Chassis ground clearance: See page A-16

If the clearance of the vehicle is not standard, try to level the vehicle by rocking it down.

If still not correct, check for bad springs or suspension parts.

HINT: When measuring the chassis ground clearance, measure from the ground to the center of the lower suspension arm front mounting bolt.

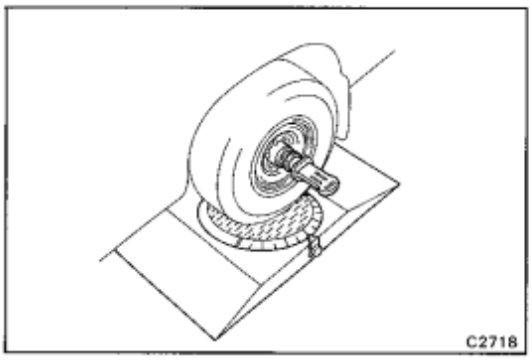

3. INSTALL WHEEL ALIGNMENT EQUIPMENT

Follow the specific instructions of the equipment manufacture.

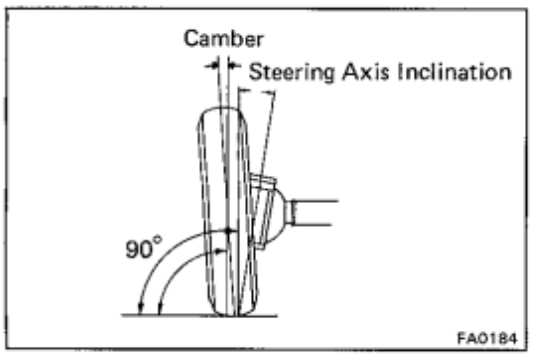

4. CHECK CAMBER AND STEERING AXIS INCLINATION

Camber: 1°00′ ± 45′ (1° ± 0.75°)

Steering axis inclination: 12°00′ ± 45′ (12° ± 0.75°)

If the steering axis inclination is not as specified after camber have been correctly adjusted, recheck the steering knuckle and front wheel for bending or looseness.

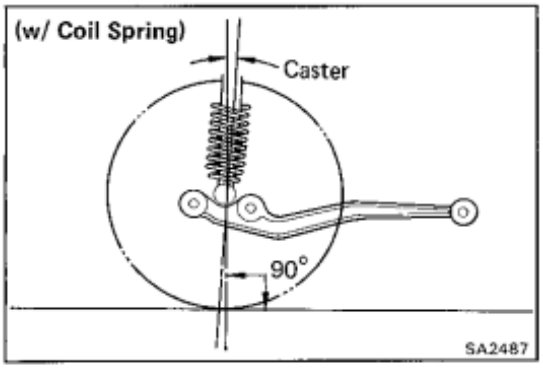

5. **(w/ COIL SPRING)**
CHECK CASTER

Caster: 4°05′ ± 1° (4.08° ± 1°)

If caster is not as specified, inspect and replace damaged or worn suspension parts.

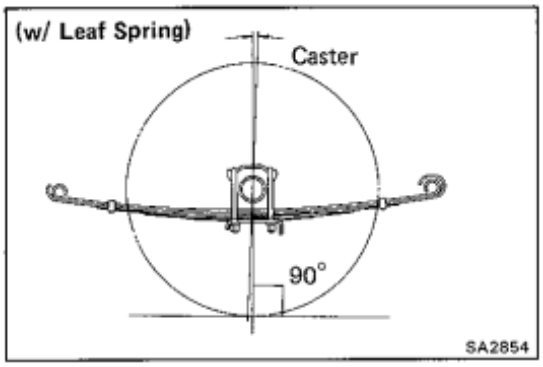

6. **(w/ LEAF SPRING)**
CHECK CASTER

Short Middle series	**1°15′ ± 1° (1.25° ± 1°)**
Long (Van) series	**0°50′ ± 1° (0.83° ± 1°)**
Long (Pickup) series	**0°30′ ± 1° (0.5° ± 1°)**

If caster is not as specified, inspect and replace damaged or worn parts.

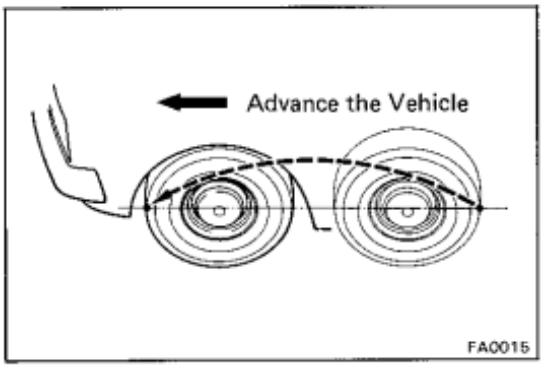

7. **ADJUST TOE-IN**

(a) Make sure the wheels are positioned straight ahead.

(b) Mark the center of each rear tread at spindle height and measure the distance between the marks of the right and left tires.

(c) Advance the vehicle until the marks on the rear side of the tires come to the front.

HINT: The toe-in should be measured at the same point on the tire at the same level.

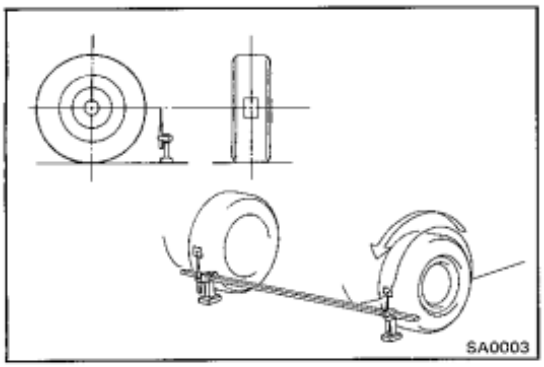

(d) Measure the distance between the marks on the front side of the tires.

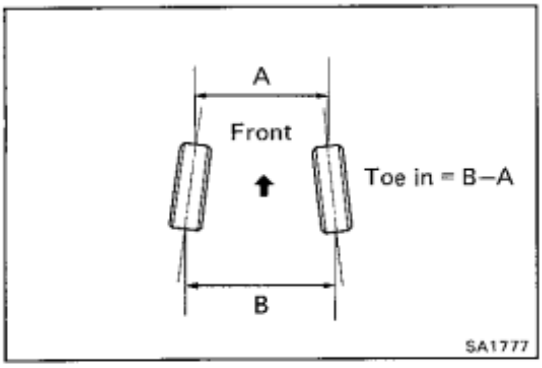

(e) Measure the toe-in.

Toe-in = B — A

Inspection STD: See page A-16

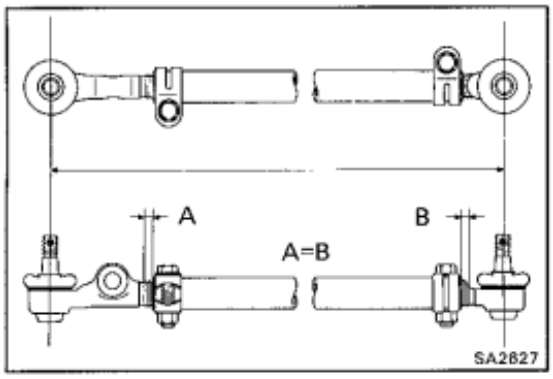

(f) Loosen the nuts holding the clamps to the tie rod.

(g) Adjust toe-in to the correct value by turning the tie rod.

(h) Insure that the lengths of the tie rod ends are the same.

(i) Torque the nuts holding the clamps.

Torque: 375 kg-cm (27 ft-lb, 37 N·m)

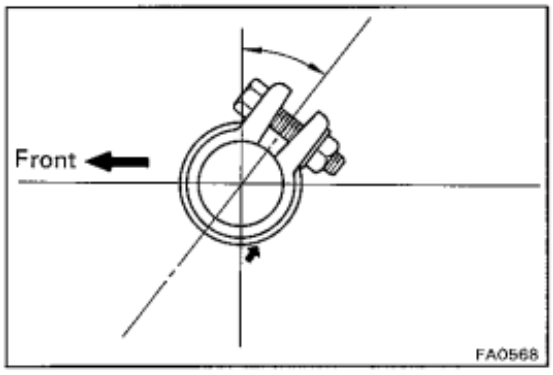

HINT: The clamps opening must be positioned at the rear of the tie rod and face within 45° from the verticle axis.

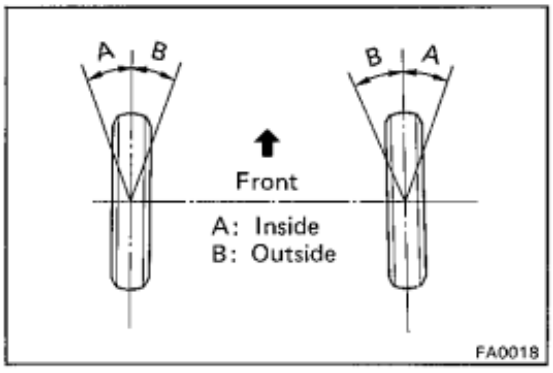

8. ADJUST WHEEL ANGLE

Remove the caps of the knuckle stopper bolts and check the steering angles.

Wheel angle: See page A-16

Wheel angle		
Max.	Inside wheel	32° $^{+0°}_{-3°}$
	Outside wheel	30° (Leaf Spring Type)
		28° (Coil Spring Type)

HINT: When the steering wheel is fully turned, make sure that the wheel is not touching the body or brake flexible hose.

If maximum steering angles differ from the standard value, adjust the wheel angle with the knuckle stopper bolts.

Torque: 450 kg-cm (33 ft-lb, 44 N·m)

If the wheel angle still cannot be adjusted within limits, inspect and replace damaged or worn steering parts.

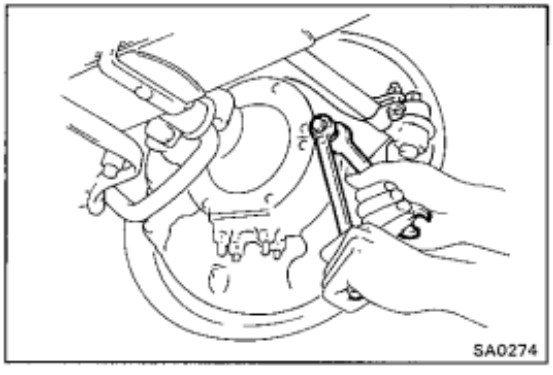

9. INSPECT SIDE SLIP (REFERENCE ONLY)

Side slip or less : 3.0 mm/m (0.018 in/3.3ft)

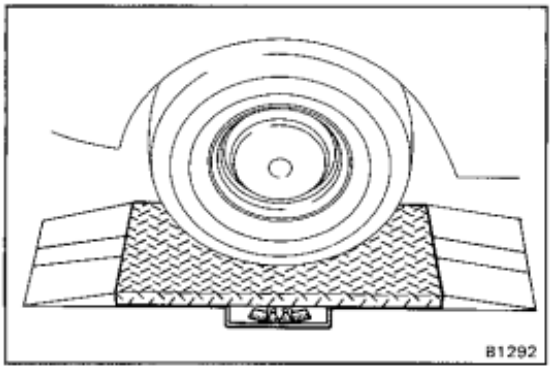

FREE WHEELING HUB

COMPONENTS

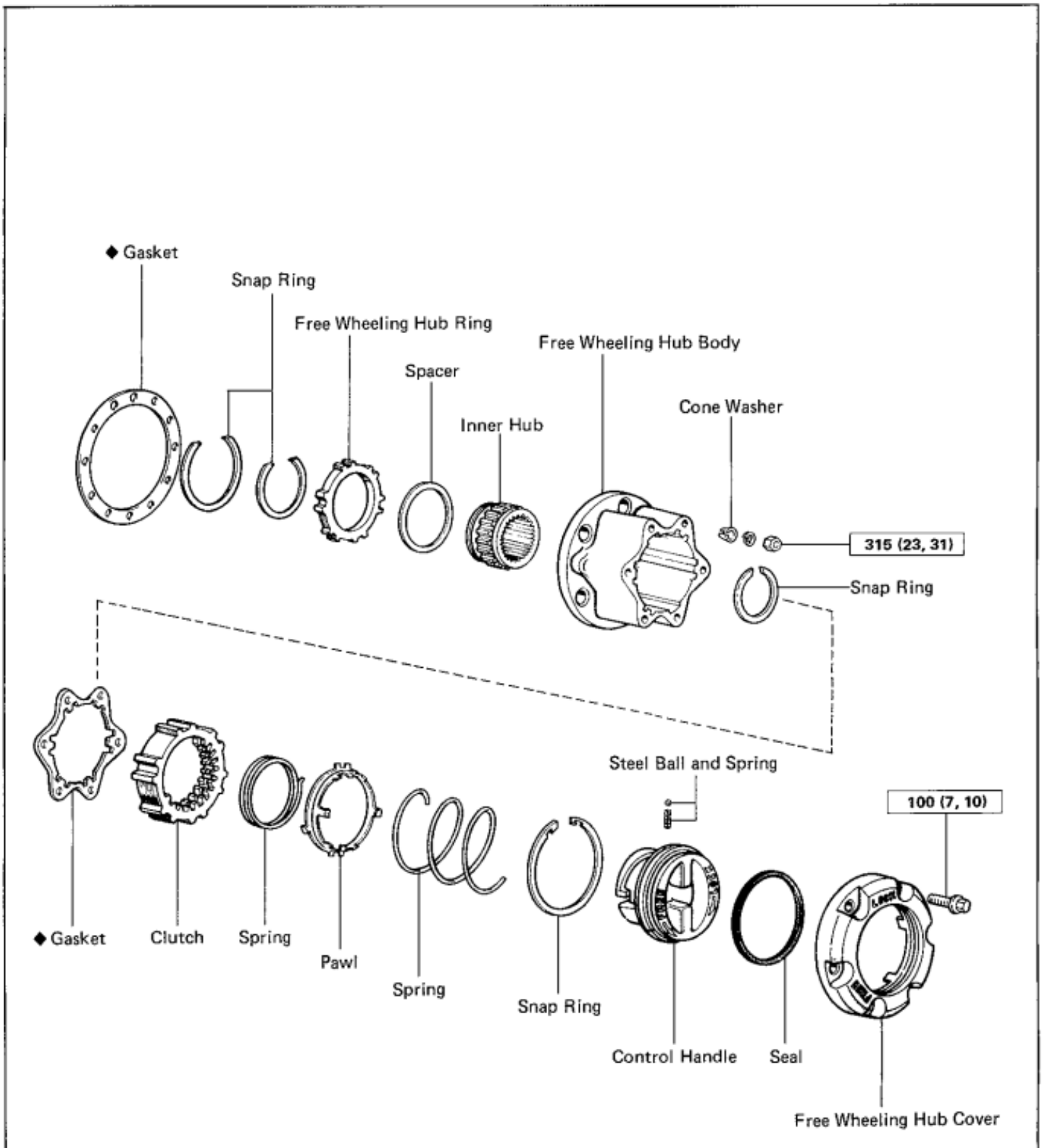

kg-cm (ft-lb, N·m) : Specified torque

◆ Non-reusable part

SA0275

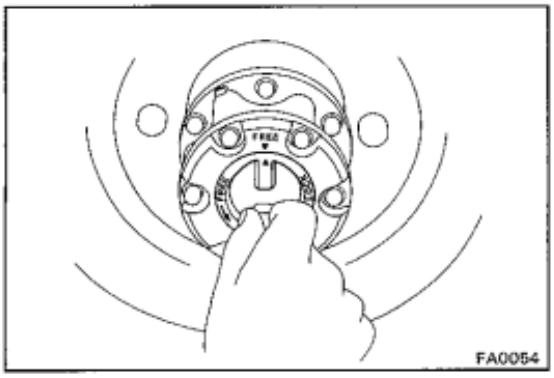

REMOVAL OF FREE WHEELING HUB

(See page SA-6)

1. REMOVE FREE WHEELING HUB COVER

(a) Set the control handle to FREE.

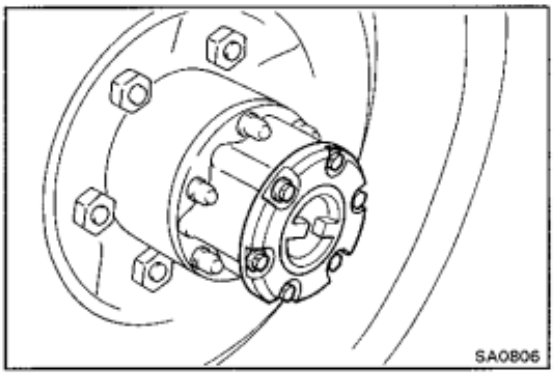

(b) Remove the six cover mounting bolts and pull off the cover.

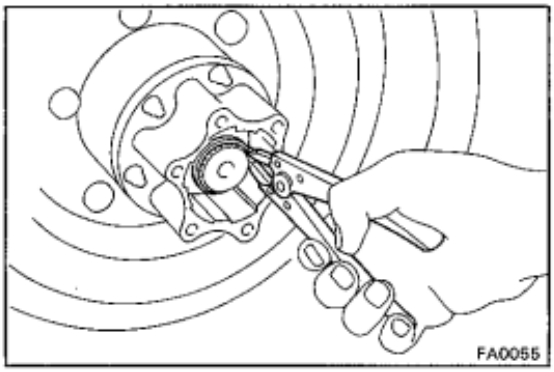

2. REMOVE SNAP RING

Using snap ring pliers, remove the snap ring.

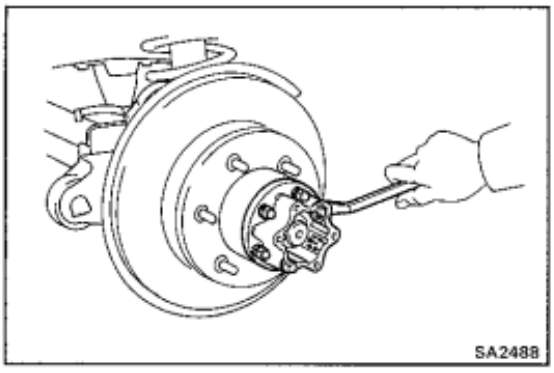

3. REMOVE FREE WHEELING HUB BODY

(a) Remove the six mounting nuts and washers.

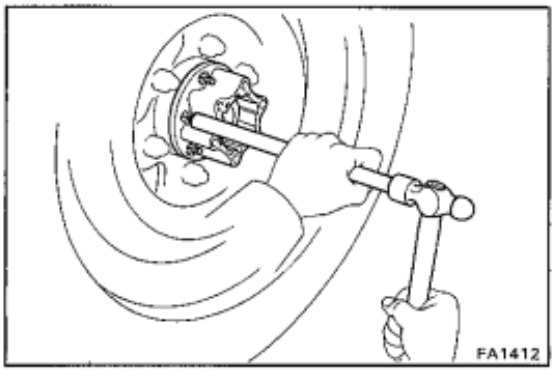

(b) Using a brass bar and hammer, tap on the bolt heads and remove the cone washers.

(c) Pull off the free wheeling hub body.

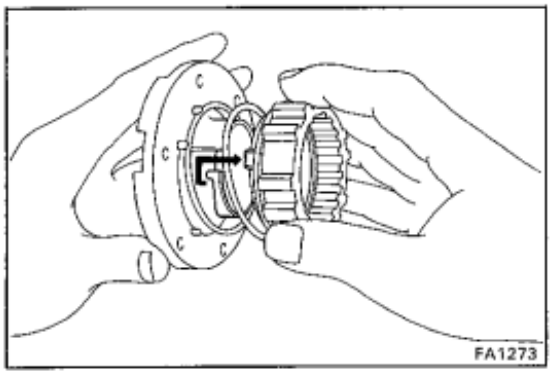

DISASSEMBLY OF FREE WHEELING HUB

(See page SA-6)

1. **REMOVE CONTROL HANDLE FROM FREE WHEELING HUB COVER**

   (a) Compressing the spring, remove the pawl tab from the handle cam, and remove the clutch with the two springs and pawl.

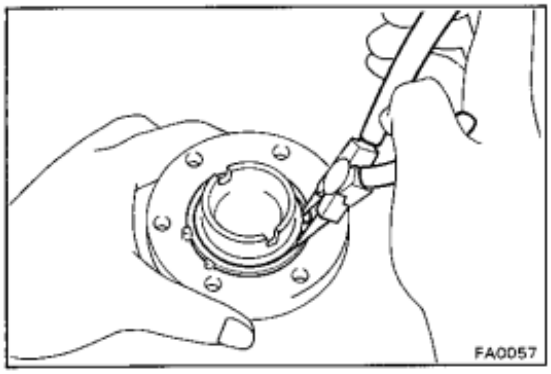

   (b) Using snap ring pliers, remove the snap ring from the free wheeling hub cover.

   (c) Remove the control handle from the free wheeling hub cover.

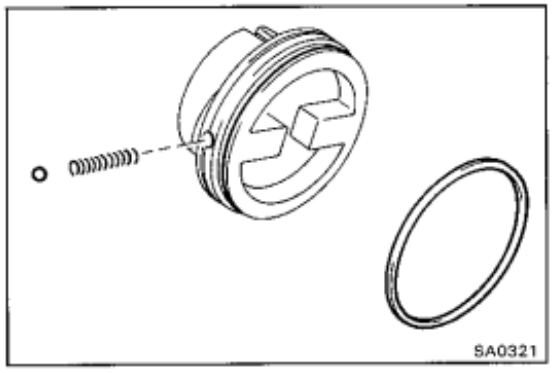

   (d) Remove the steel ball, spring and seal from the control handle.

2. **REMOVE INNER HUB AND FREE WHEELING HUB RING FROM FREE WHEELING HUB BODY**

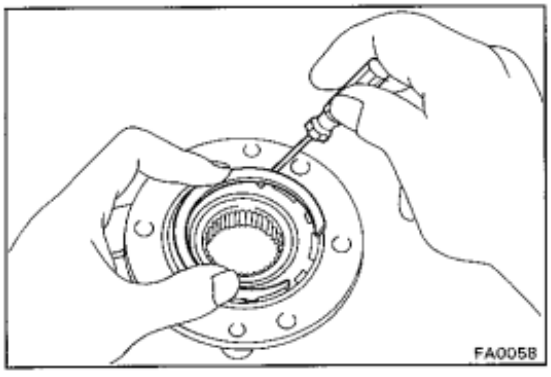

   (a) Using a screwdriver, remove the snap ring from the free wheeling hub body.

   (b) Remove the inner hub with spacer, snap ring and free wheeling hub ring.

3. **REMOVE PAWL FROM FREE WHEELING HUB CLUTCH**

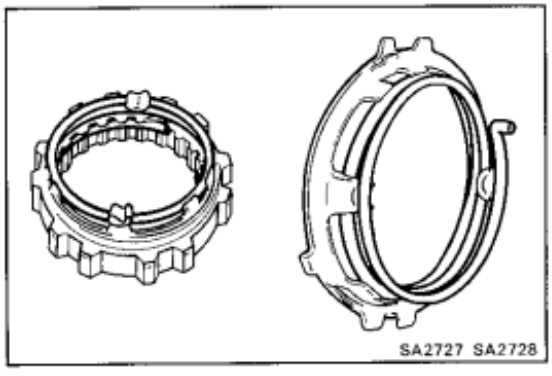

   (a) Remove the pawl with the spring from the clutch.

   (b) Remove the spring from the pawl.

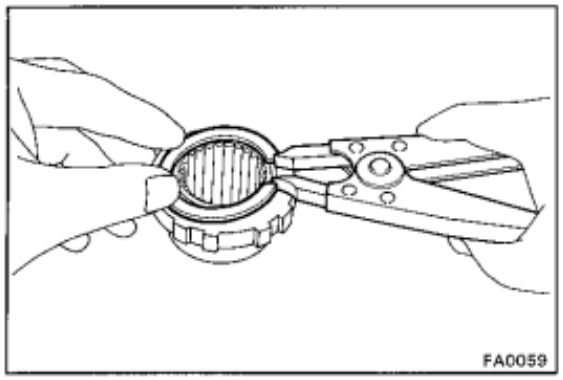

4. REMOVE FREE WHEELING HUB RING FROM INNER HUB

(a) Using snap ring pliers, remove the snap ring from the inner hub.

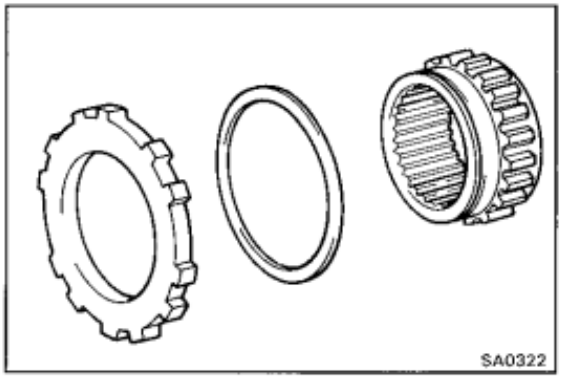

(b) Remove the free wheeling hub ring and spacer from the inner hub.

INSPECTION OF FREE WHEELING HUB

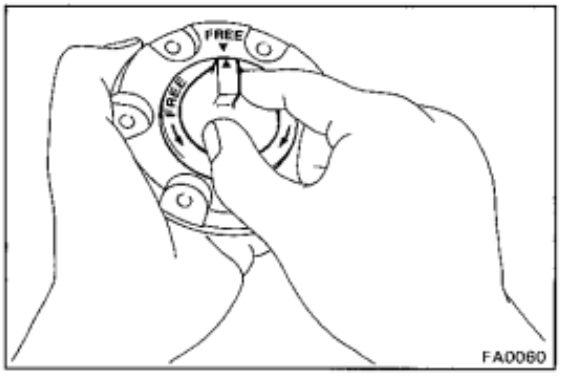

1. INSPECT COVER, HANDLE AND SEAL

Temporarily install the handle with seal in the cover and check that the handle moves smoothly and freely.

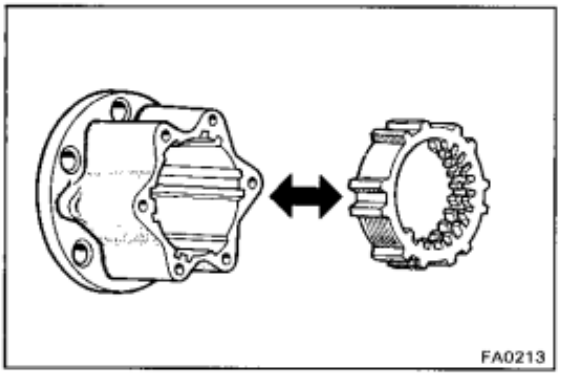

2. INSPECT BODY AND CLUTCH

Check that the clutch moves smoothly in the body.

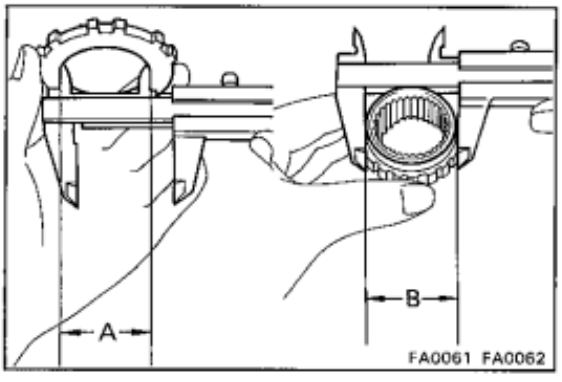

3. MEASURE OIL CLEARANCE BETWEEN INNER HUB AND FREE WHEELING HUB RING

Oil clearance (A — B): 0.3 mm (0.012 in.)

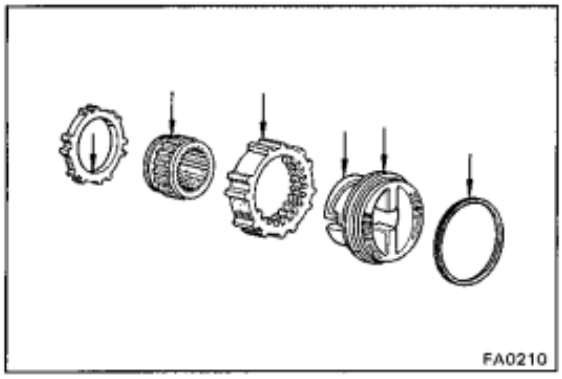

ASSEMBLY OF FREE WHEELING HUB

(See page SA-6)

1. APPLY MP GREASE TO SLIDING SURFACE OF PARTS

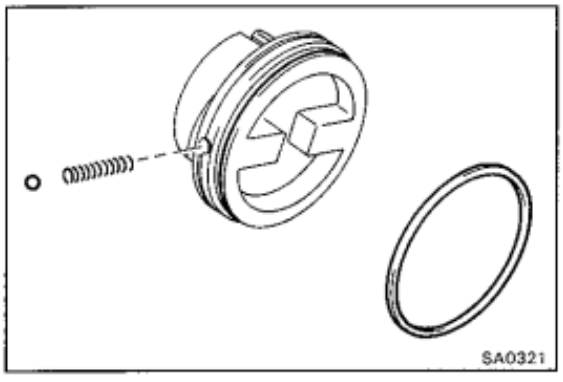

2. INSTALL CONTROL HANDLE TO COVER

(a) Install the seal, spring and steel ball to the handle.

(b) Insert the handle in the cover.

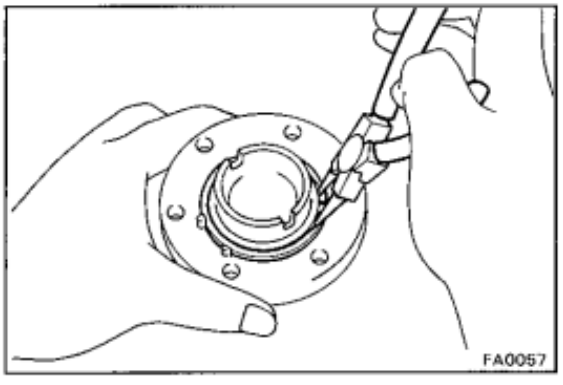

(c) Using snap ring pliers, install the snap ring to the cover.

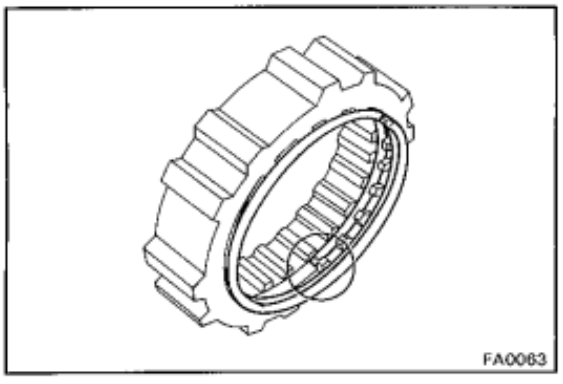

3. INSTALL SPRING ON CLUTCH

Install the tension spring to the clutch with the spring end aligned with the initial groove.

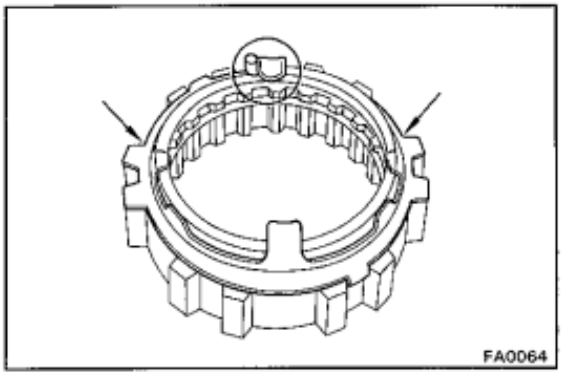

4. INSTALL PAWL TO CLUTCH

(a) Place the pawl on the tension spring with one of the large tabs against the bent spring end.

(b) Place the ring top of the spring on the small tabs.

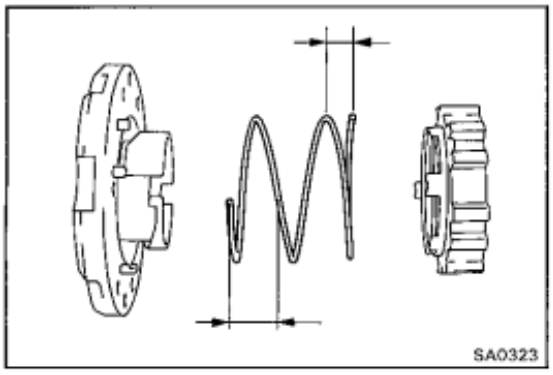

5. INSTALL CLUTCH AND SPRING INTO COVER

(a) Place the spring between the cover and clutch with the large spring end toward the cover.

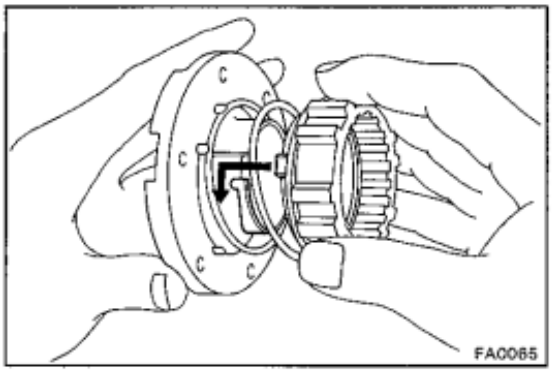

(b) Compress the spring and install the clutch with the pawl tab fit to the handle cam.

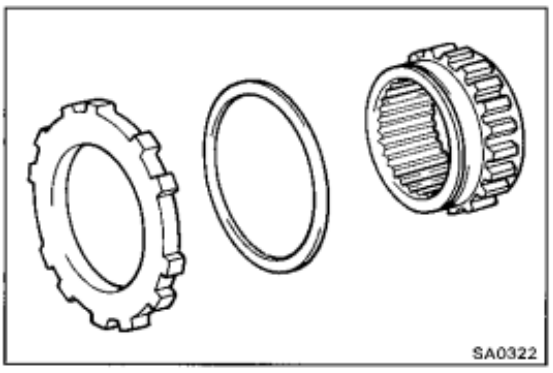

6. INSTALL SPACER AND FREE WHEELING HUB RING TO INNER HUB

(a) Install the spacer and free wheeling hub ring to the inner hub.

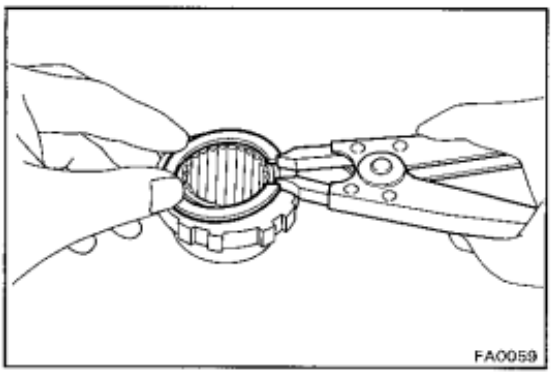

(b) Using snap ring pliers, install the snap ring to the free wheeling hub ring.

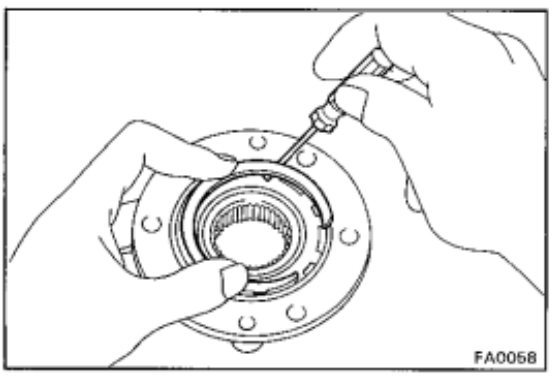

7. INSTALL INNER HUB AND FREE WHEELING HUB RING TO FREE WHEELING HUB BODY

(a) Insert the inner hub and free hub ring to the body.

(b) Using a screwdriver, install the snap ring.

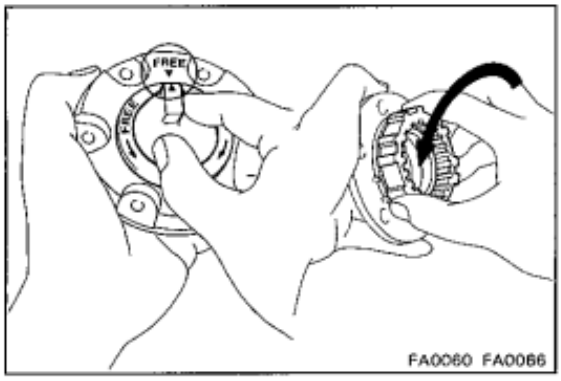

8. TEMPORARILY INSTALL COVER TO BODY AND CHECK FREE WHEELING HUB

(a) Set the control handle and clutch to the ''FREE'' position.

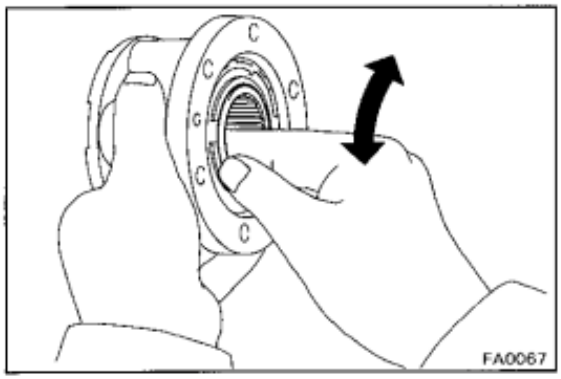

(b) Insert the cover to the body and check that the inner hub turns smoothly.

(c) Remove the cover from the body.

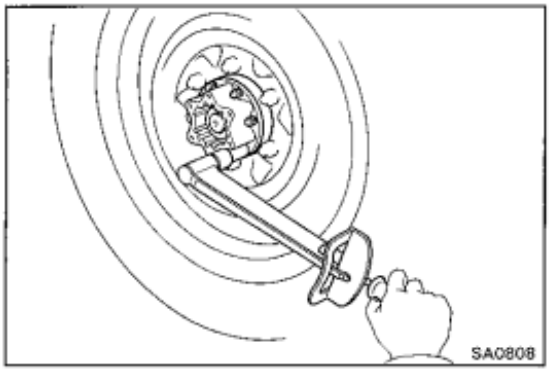

INSTALLATION OF FREE WHEELING HUB

(See page SA-6)

1. INSTALL FREE WHEELING HUB BODY

(a) Place a new gasket on the front axle hub.

(b) Install the free wheeling hub body with the six cone washers, washers and nuts. Torque the nuts.

Torque: 315 kg-cm (23 ft-lb, 31 N·m)

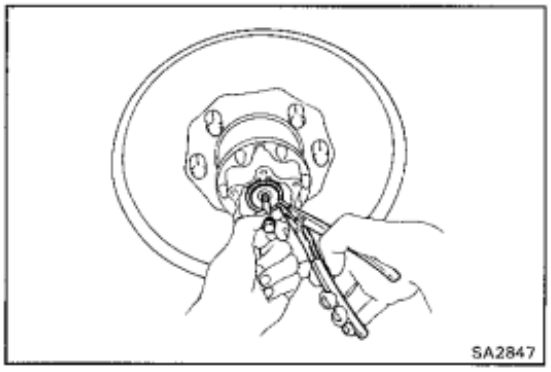

2. INSTALL SNAP RING

(a) Install a bolt to the axle shaft and pull it out.

(b) Using snap ring pliers, install the snap ring.

(c) Remove the bolt.

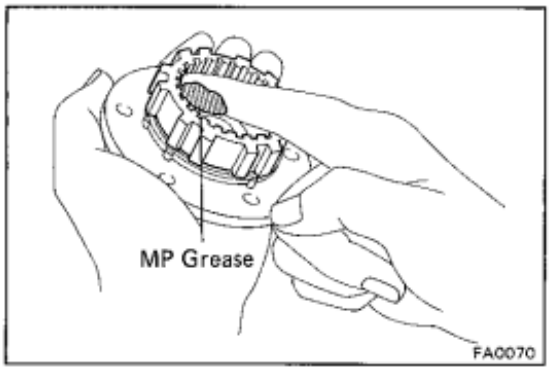

3. APPLY MP GREASE TO INNER HUB SPLINES

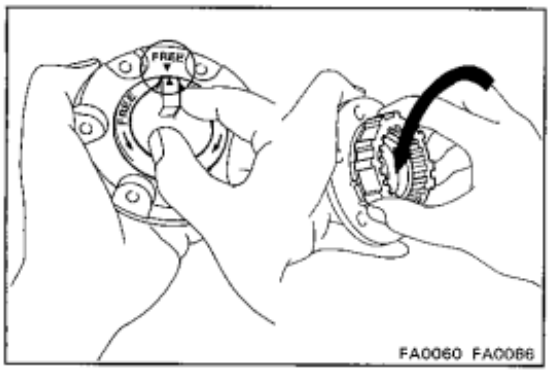

4. INSTALL FREE WHEELING HUB COVER WITH NEW GASKET

(a) Set the control handle and clutch to the ''FREE'' position.

(b) Place a new gasket on the cover.

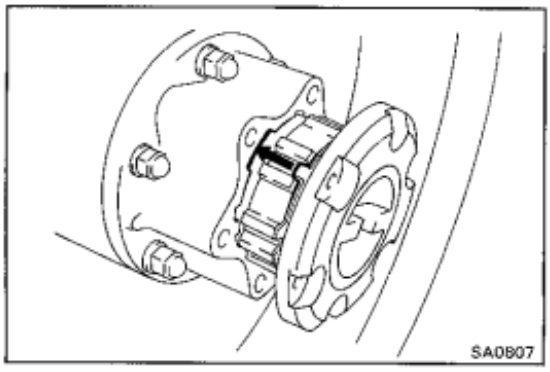

(c) Install the cover to the body with the follower pawl tabs aligned with the non-toothed portions of the body.

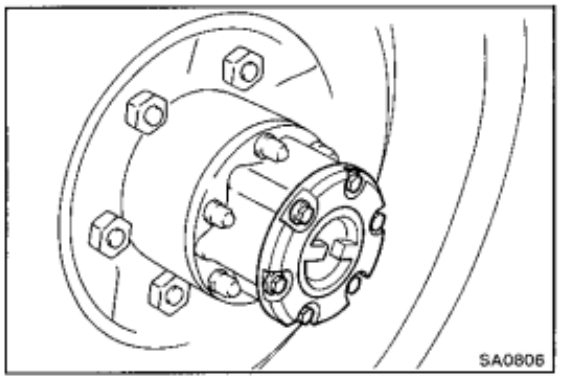

(d) Install and torque the cover mounting bolts.

Torque: 100 kg-cm (7 ft-lb, 10 N·m)

POWER LOCKING HUB

Parts Location

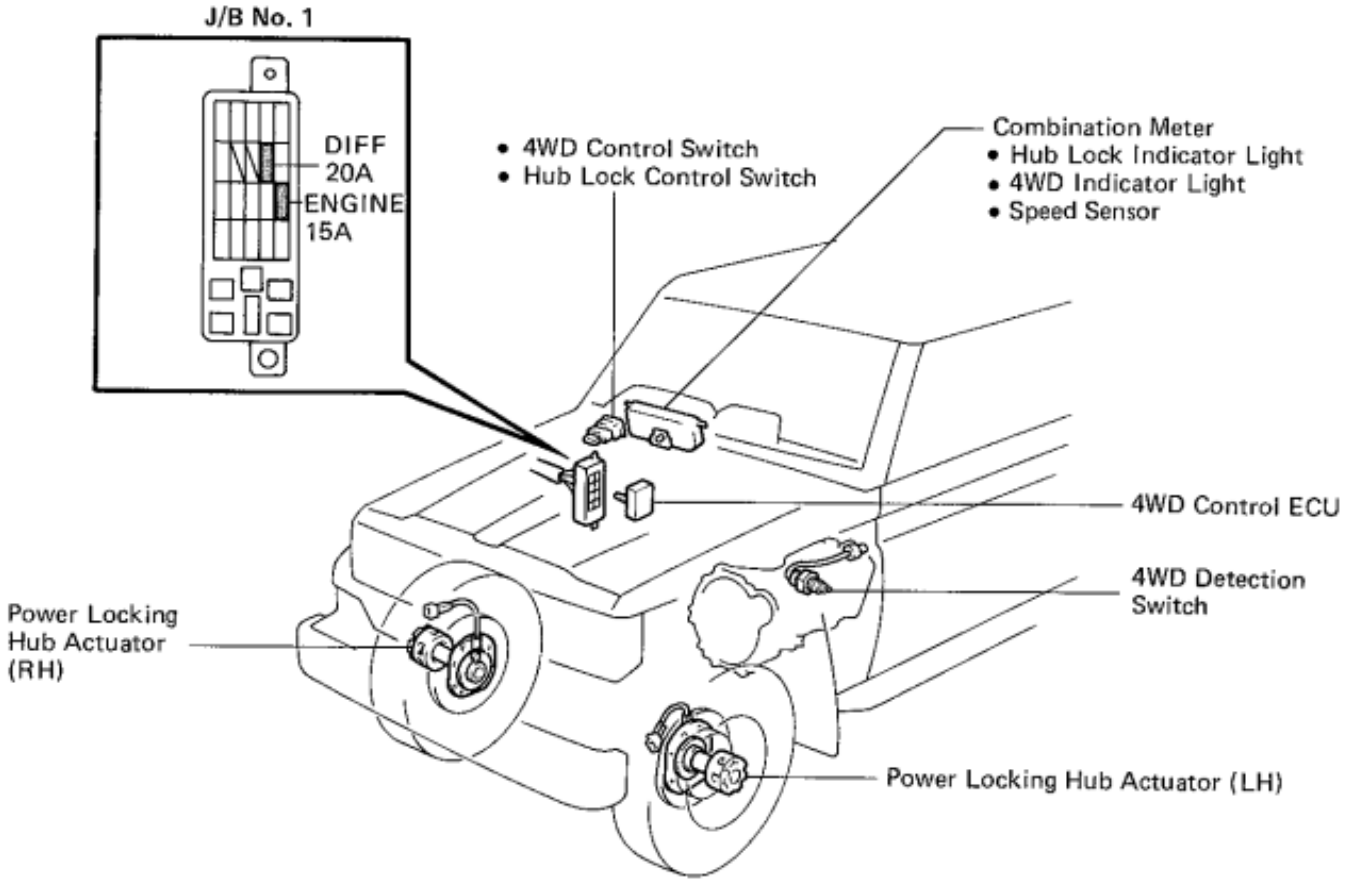

SA2876

Wiring Diagram

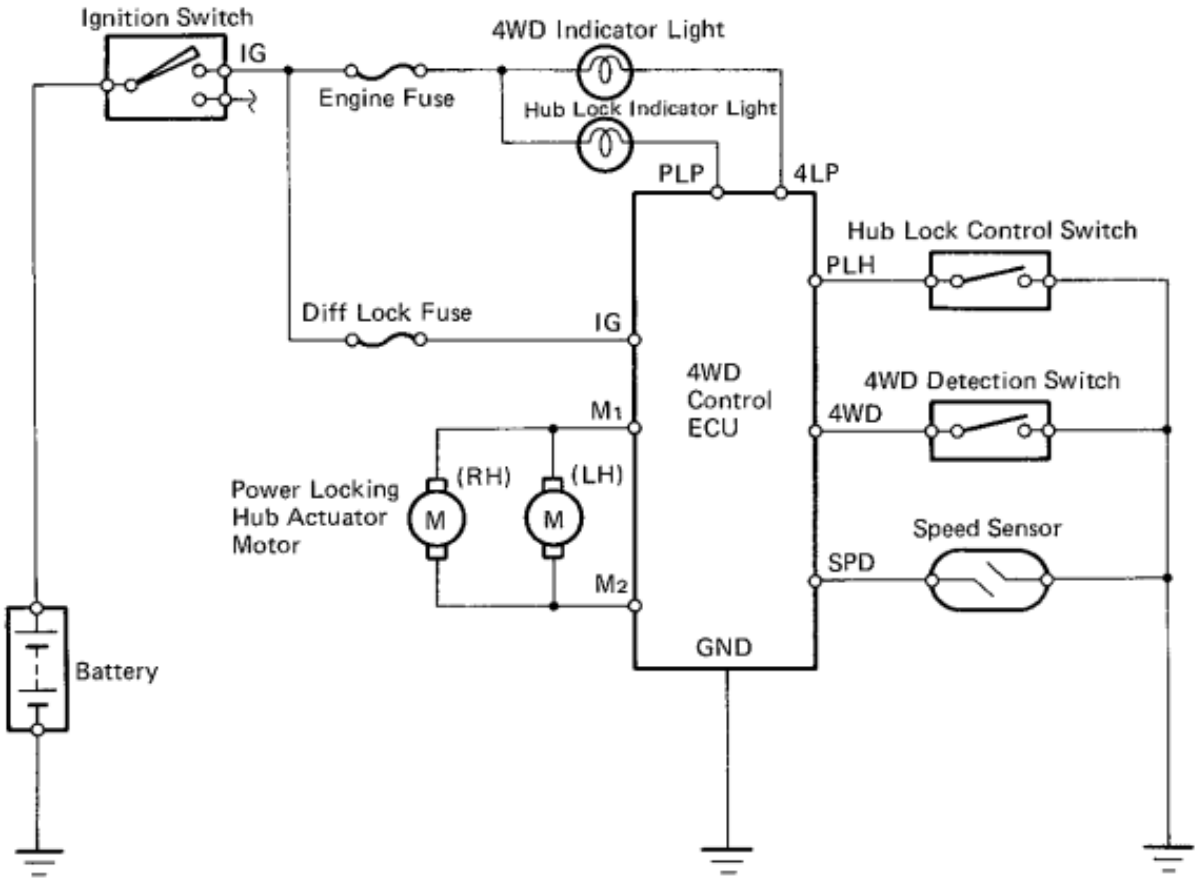

SA2590

Connectors

4WD Control ECU

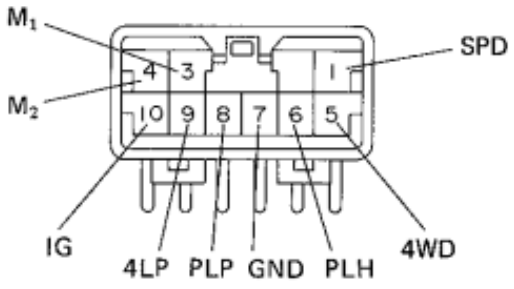

4WD Control Switch
• Hub Lock Control Switch

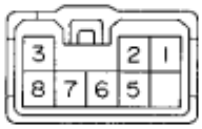

4WD Detection Switch

Hub Lock Indicator Light

4WD Indicator Lamp

Connector A

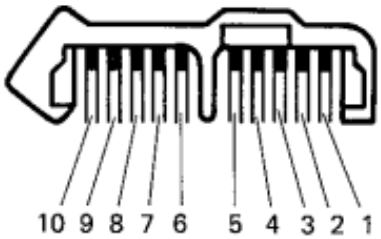

Connector B

Power Locking Hub Actuator

SA2591 SA2592
SA2593 SA2877
SA2878 SA2879
SA2942

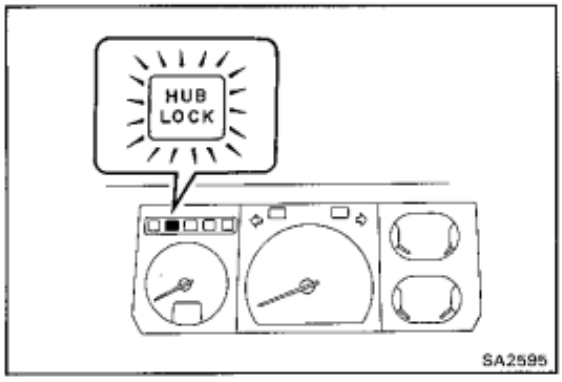

Troubleshooting

INSPECTION OF TROUBLES IN SYSTEM

1. INSPECT HUB LOCK INDICATOR LIGHT

(a) Turn the ignition switch on.

(b) Turn the hub lock switch on.

(c) Check that the hub lock indicator light lights on.

(d) Turn the hub lock switch off.

(e) Check that the hub lock indicator light lights off.

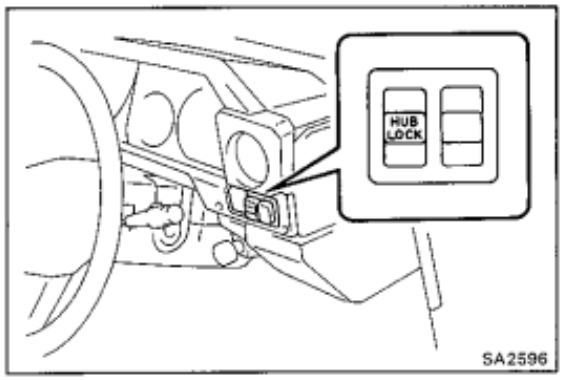

2. INSPECT HUB LOCK OPERATION

(a) Jack up the front of the vehicle.

(b) Turn the ignition switch on.

(c) Turn the hub lock control switch on.

(d) Inspect the condition of the hub lock indicator light and hub.

HINT:

- When turn the hub lock control switch on, slowly the front wheels by hand to lock the hub.
- When check that the hub is in lock condition, set the transfer to 2WD condition and turn the front propeller shaft then confirm that the left and right wheels turn.

Hub Lock Control Switch	Indicator Light	Hub
OFF	Light Off	Free
ON	Light On	Lock

(e) Turn the ignition switch off.

(f) Jack down vehicle.

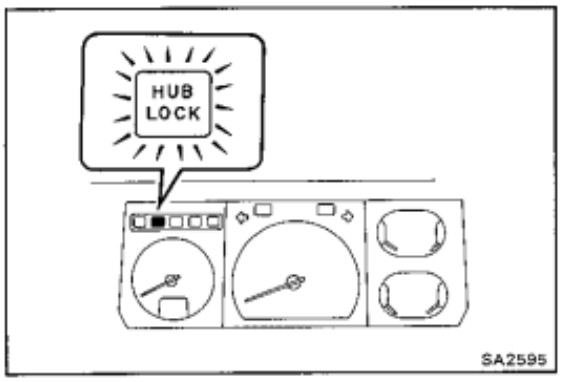

3. INSPECT SYSTEM OPERATION

(a) Jack up the vehicle, and start the engine.

(b) Keep the vehicle speed at 8 km/h (7.0 mph) or more until the step (e) is completed, and turn the hub lock control switch on.

(c) Check that the hub lock indicator light blinks.

(d) (w/ One-touch 2-4 selector switch)
Turn the H4 switch on.

(e) (w/o One-touch 2-4 selector switch)
Change the selector lever to the H4 mode.

(f) Check that the hub lock indicator light lights up, then turn the H4 switch off.

(g) Keep the vehicle speed at 5km/ h (3.1 mph) or less.

(h) Check that the hub lock indicator light lights up.

(i) Stop the engine, and jack down the vehicle.

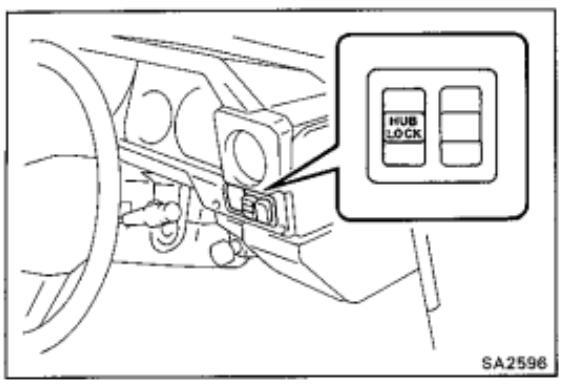

SYSTEM TROUBLESHOOTING

TROUBLESHOOT SYSTEM WITH TABLE BELOW

HINT: Before troubleshoot the system, confirm the troubles by the "INSPECTION OF TROUBLES IN SYSTEM" (See page SA-18), then inspect the trouble according to the following table.

You will find the cause of trouble more easily using the table shown below. In this table, the numbers indicate the order priority of the causes in troubles. Check each part in the order shown. If necessary, replace the parts.

See page / Parts name / Trouble	SA-21									SA-21	SA-21	SA-20	SA-21	SA-23	–
	Power Locking Hub ECU														
	Terminal and terminal No.														
	1	3	4	5	6	7	8	9	10						
	SPD	M1	M2	4WD	PLH	GND	PLP	4LP	IG	Indicator Light	4WD Detection Switch	4wd Control Switch (Hub Lock Switch)	Speed Sensor	Power Locking Hub Actuator	Wire Harness
Hub lock indicator light dose not turn on					2		3		1	5		4			6
Hub does not become "FREE" to "LOCK" condition		4	4		3	2			1			5		6	7
Hub does not become "LOCK" to "FREE" condition		4	4		3	2			1			5		6	7
System operates abnormally	1			3				4		7	6	5	2		8

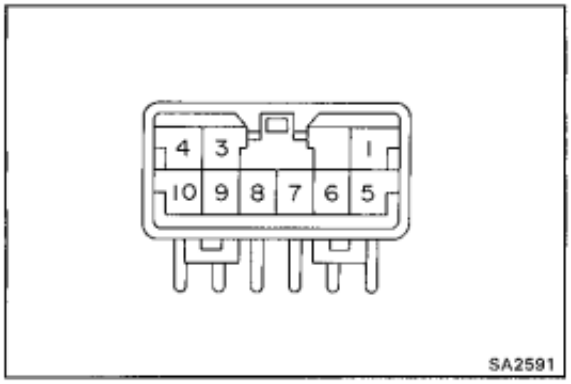

Parts Inspection

Power Locking Hub ECU

INSPECT ECU CIRCUIT WITH CONNECTOR CONNECTED

HINT:

- Before inspection, check that the battery voltage is 20 — 28 V.
- Inspect with the ignition switch turning on.

Terminal		Check for	Tester connection +	Tester connection —	Condition	Specified voltage	Trouble part
1	SPD	Voltage	1	7	Slowly turn the speed meter cable	0 ↔ 4.5V	Speed Sensor
3	M_1	Voltage	3	4	Hub lock switch OFF to ON	Battery voltage (About 3 seconds)	4WD Control ECU
4	M_2	Voltage	4	3	Hub lock switch ON to OFF	Battery voltage (About 4 seconds)	
5	4WD	Voltage	5	7	4WD Condition (H4 switch ON or transfer lever in L4 position)	No voltage	4WD Detection Switch
					2WD Condition (H4 switch OFF and transfer lever in H2 position)	Battery voltage	
6	PLH	Voltage	6	7	Hub lock switch OFF	Battery voltage	Hub Lock Switch
					Hub lock switch ON	No voltage	
7	GND	Continuity	7	Body ground	Constant (IG switch OFF)	Continuity	Wire Harness
8	PLP	Voltage	8	7	Hub lock switch OFF (Hub lock indicator light off)	Battery voltage	Hub Lock Indicator Light
					Hub lock switch ON (Hub lock indicator light on)	No voltage	
9	4LP	Voltage	9	7	2WD Condition (4WD indicator light off)	Battery voltage	4WD Indicator Light
					4WD Condition (4WD indicator light on)	No voltage	
10	IG	Voltage	10	7	Constant	Battery voltage	DIFF Fuse

4WD Control Switch

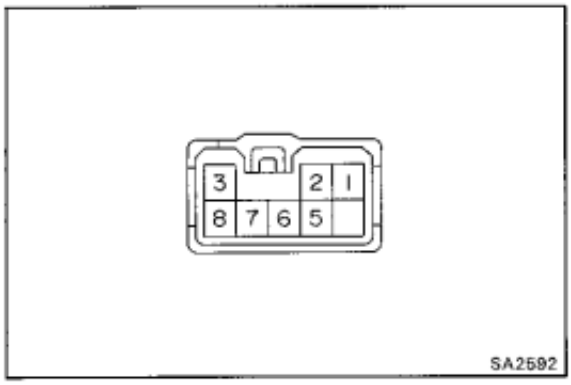

INSPECT 4WD CONTROL SWITCH

(4WD Control Switch/Continuity)

Switch	Terminal / Position	1	6	5	8	3	Illumination 7	Illumination 2
H4 Switch	OFF	○	○					
	ON	○		○			◎	◎
Hub Lock Switch	OFF							
	ON				○	○		

If continuity is not as specified, replace the switch.

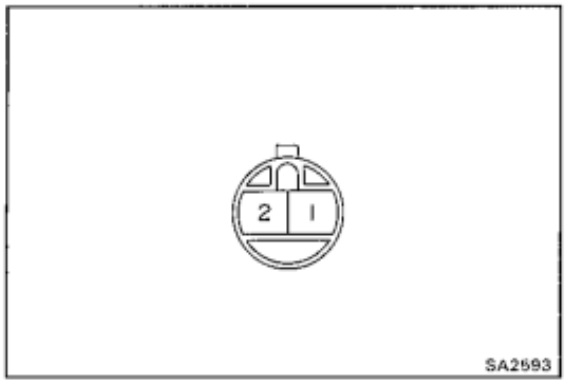

4WD Detection Switch

INSPECT 4WD DETECTION SWITCH

(a) Remove the switch from the transfer.

(b) Inspect the switch continuity between terminals.

Terminal / Switch position	1	2
Tip ball is pushed	○	○
Tip ball is free		

If continuity is not as specified, replace the switch.

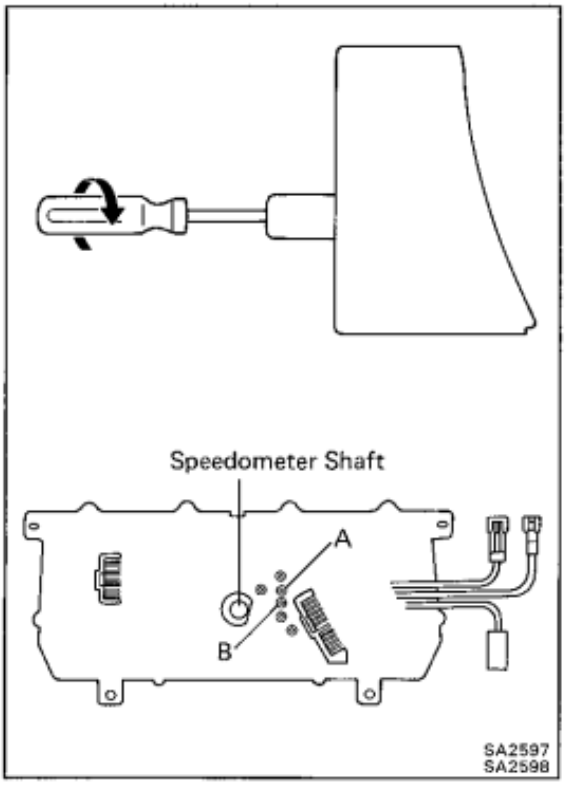

Speed Sensor

INSPECT SPEED SENSOR

(a) Remove the combination meter.
(See page BO-50)

(b) Using a small screwdriver, turn the speedometer shaft.

HINT: Tape the screwdriver tip before use.

(c) Check that there is continuity between terminals A and B four times per each revolution of the speedometer shaft.

If operation is not a specified, replace the speedometer.

(d) Install the combination meter.
(See page BO-56)

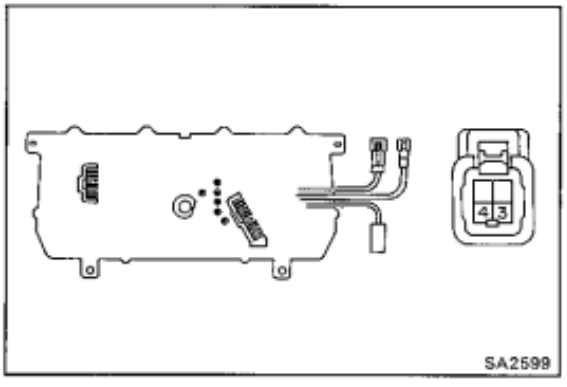

INDICATOR LIGHTS

(Hub Lock Indicator Light)

INSPECT HUB LOCK INDICATOR LIGHT

(a) Remove the combination meter.
(See page BO-50)

(b) Connect the positive (+) lead from the battery to terminal 3 and negative (−) lead to terminal 4, check the indicator light lights on.

If the indicator light does not light up, test the bulb.

(c) Install the combination meter.
(See page BO-56)

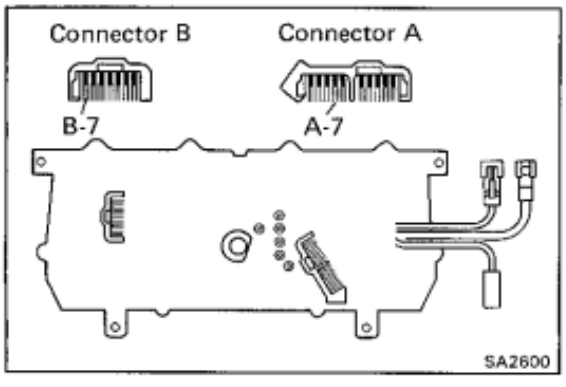

(4WD Indicator Light)

INSPECT INDICATOR LIGHT

(a) Remove the combination meter.
(See page BO-50)

(b) Connect the positive (+) lead from the battery to terminal A-7, and the negative (−) battery to terminal B-7 check that the indicator light lights on.

If the indicator light does no light up, test the bulb.

(c) Install the combination meter.
(See page BO-56)

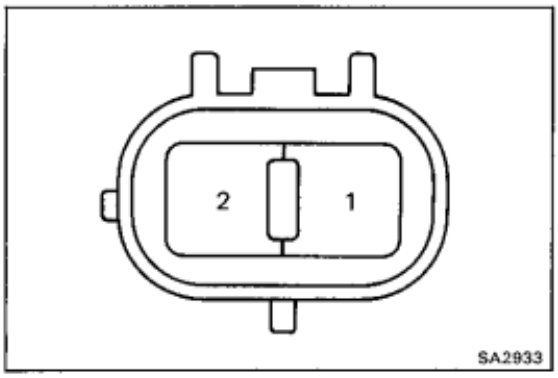

Power Locking Hub Actuator

1. **INSPECT POWER LOCKING HUB ACTUATOR OPERATION**

(a) Set the vehicle in 2WD condition and turn on the hub lock switch.

(b) Jack up the front of the vehicle and lock the rear wheels.

(c) Disconnect the connector from the disc brake dust cover.

(d) Check that the axle hub is in lock condition.

(e) Connect the positive (+) lead from the battery to terminal 1 and negative (−) lead to terminal 2, check that the motor operates and the hub is in "LOCK" to "FREE" condition.

NOTICE: Do not apply voltage for more than 4 seconds.

HINT: When checking the hub condition, turn the front propeller shaft and check that the right and left tires do not turn.

(f) Reverse the leads, and check that the motor operates and the hub is in "FREE" to "LOCK" condition.

NOTICE: Do not apply voltage for more than 3 seconds.

HINT:

- When checking the hub condition, turn the front propeller shaft and check that the right and left tires turn.
- If the inner hub did not mesh with the clutch, slowly turn the right and left wheels by hand, and set the hub in lock condition.
- If the one of the right and left hubs did not be in lock condition, both tires do not turn when turn the front propeller shaft.

(g) Connect the connector.

(h) Jack down the vehicle.

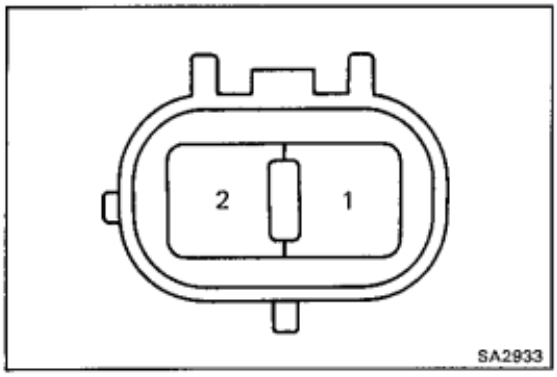

2. **INSPECT ELECTRICAL LOCKING HUB ACTUATOR MOTOR**

(a) Disconnect the connector from the disc brake dust cover.

(b) Measure the resistance between terminals.

Resistance: 20 — 500 Ω

If resistance value is not as specified, check the power locking hub body sub-assembly and replace if necessary.

(c) Check that there is no continuity between each terminal and body ground.

If there is continuity, replace the power locking hub body sub assembly.

(d) Connect the connector.

Power Locking Hub Actuator

COMPONENTS

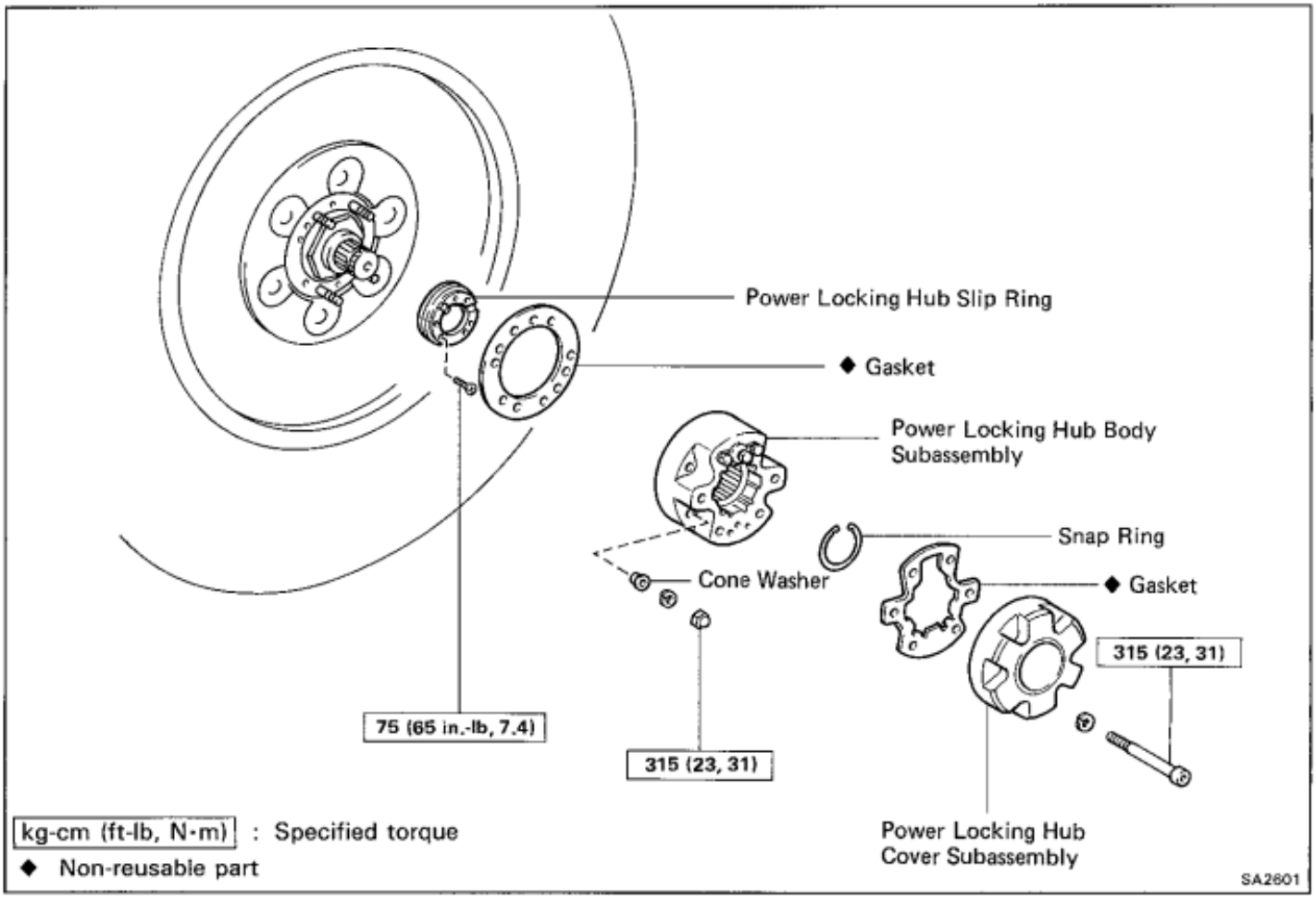

REMOVAL OF POWER LOCKING HUB ACTUATOR

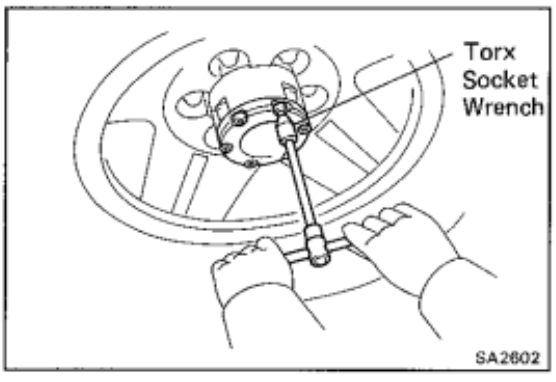

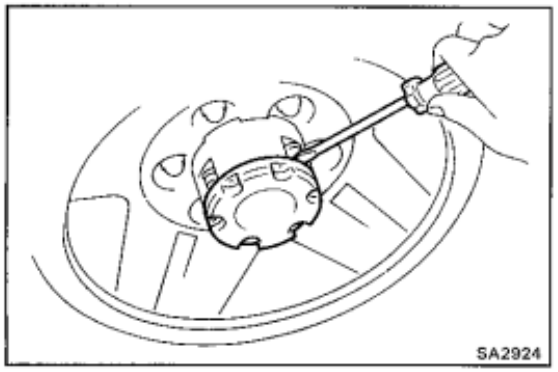

1. **REMOVE POWER LOCKING HUB COVER SUB-ASSEMBLY**

(a) With the ignition switch to the "ON" position, turn the hub lock switch to off and set the hub in "FREE" condition.

(b) Using torx socket wrench, remove the six hexagon bolts.

(Torx socket wrench T40 09042-00020)

(c) Insert a screwdriver between the hub cover sub-assembly and hub body set nut, and pry off the hub cover sub-assembly.

NOTICE:

- **Apply equal force at the four positions around the set nut.**
- **Be careful not to scratch or damage the hub cover.**
- **Do not tap the hub cover subassembly with a hammer or an equivalent so as not to deform the hub cover sub-assembly.**

(d) Remove the gasket from the hub cover sub-assembly.

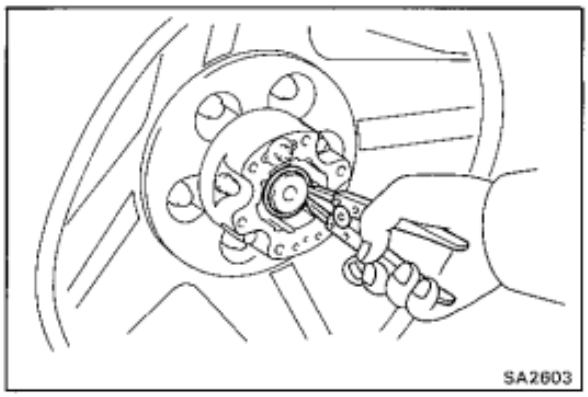

2. REMOVE POWER LOCKING HUB BODY SUBASSEMBLY

(a) Using snap ring pliers, remove the snap ring.

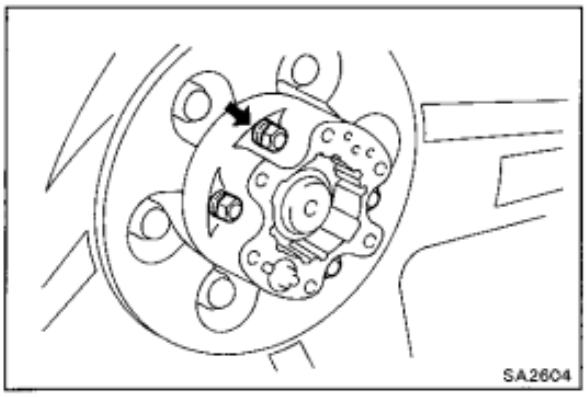

(b) Remove the four nuts and plate washers.

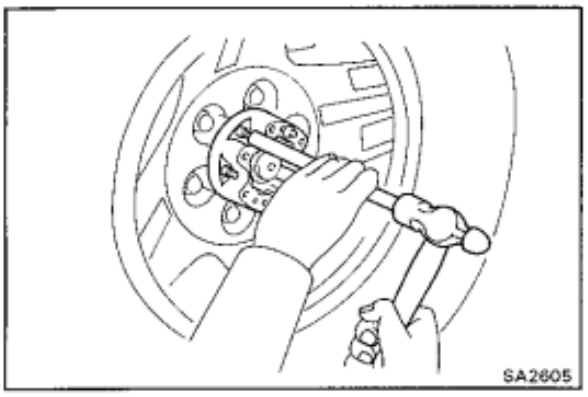

(c) Using a hammer and brass bar, tap the bolt heads and remove four cone washers.

NOTICE: Do not tap the power locking hub body subassembly.

(d) Remove the power locking hub body subassembly and the gasket.

NOTICE: Be careful not to damage the brush.

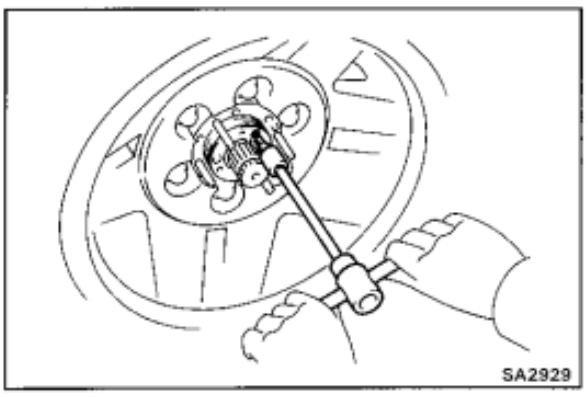

3. REMOVE POWER LOCKING HUB SLIP RING

(a) Using a torx socket wrench, remove the three set screws.

(Torx socket wrench T20 09041-00010)

(b) Remove the power locking hub slip ring.

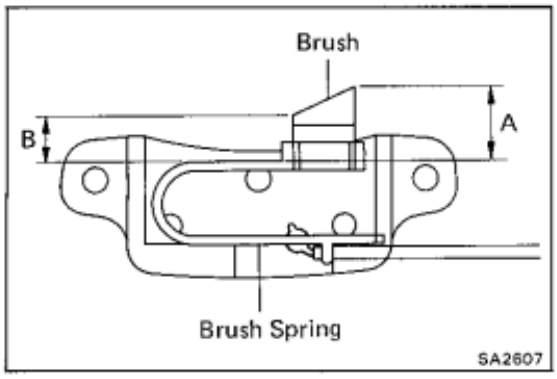

INSPECTION OF ACTUATOR COMPONENTS

1. INSPECT BRUSH

(a) Measure the brush height.

Standard height:

A 6.5 mm (0.256 in.)
B 4.7 mm (0.185 in.)

Minimum height:

A 4.2 mm (0.165 in.)
B 4.2 mm (0.122 in.)

If the height of the brush is out of the specification, replace the power locking hub body subassembly.

NOTICE:

- **Do not remove the brush from the brush holder.**
- **Be careful not to damage the brush spring.**

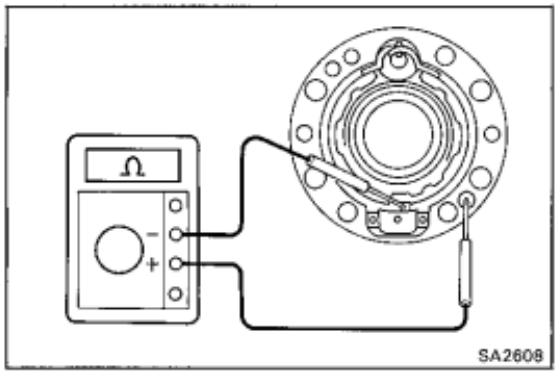

2. INSPECT POWER LOCKING HUB SUBASSEMBLY

Using a ohmmeter, check that there is no continuity between the brush and hub body subassembly.

If there is continuity, replace the power locking hub body subassembly.

INSTALLATION OF POWER LOCKING HUB ACTUATOR

(See page SA-23)

1. **CLEAN POWER LOCKING HUB COVER SET BOLT AND BOLT HOLE**

   Using the cleaning solvent, clean the set bolt and bolt hole.

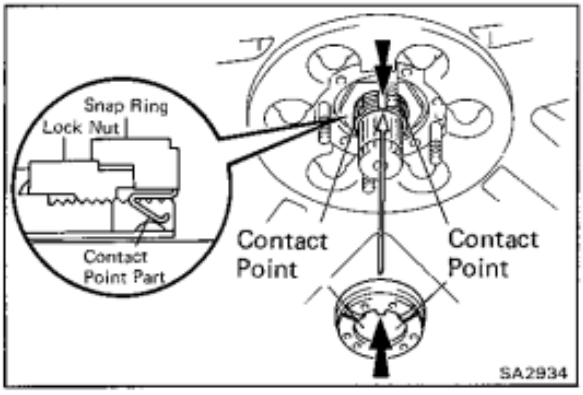

2. **INSTALL POWER LOCKING HUB SLIP RING**

   (a) Clean the slip ring, locking nut, drive shaft, and spindle of the tip.

   (b) Match the slip ring protrusion with the knuckle spindle cut-out and install the slip ring to the lock nut.

   (c) Check that the two contact points between the slip ring and knuckle spindle are actually in contact.

   NOTICE: Make sure there is no grease or oil, etc. on the parts at the contact point.

   (d) Using a torx socket wrench, install the three set screws.

   (Torx socket wrench T20 09042-00030)

   Torque: 75 kg-cm (65 in.-lb, 7.4 N·m)

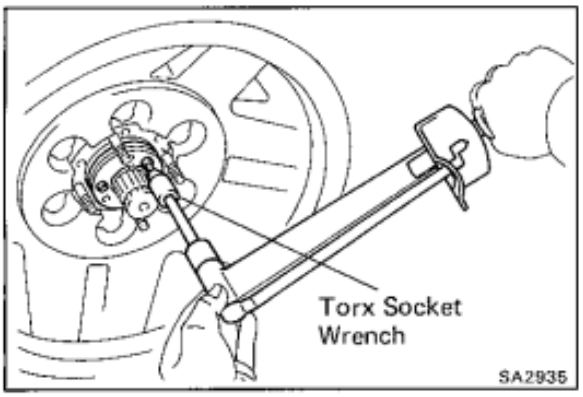

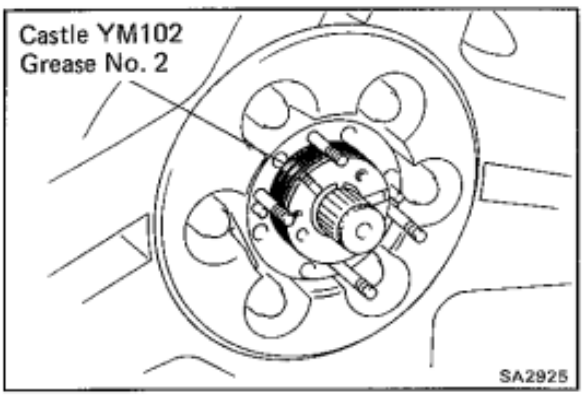

3. **APPLY CASTLE BODY GREASE W TO HUB BODY SUBASSEMBLY AND HUB COVER SUBASSEMBLY**

   (a) After cleaning the slip ring again, thinly and evenly speed castle body grease w around the circumference of the slip ring.

   Grease: Part No. 08887-02007, CASTLE BODY GREASE W

   NOTICE: Do not apply any grease other than castle YM102 No.2 to the slip ring.

   HINT:

   - Apply approx. 2 — 3 g (0.04 — 0.07 lb) of the grease.
   - If grease is not applied, or grease other than castle body grease W is applied, non-continuity at low temperatures and premature wearing of the flange will occur.

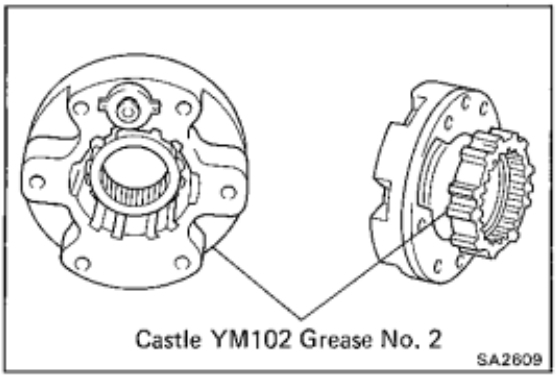

(b) Thinly and evenly apply castle body grease W to the sliding parts of the hub body subassembly and hub cover assembly.

Grease: Part No. 08887-02007, CASTLE BODY GREASE W

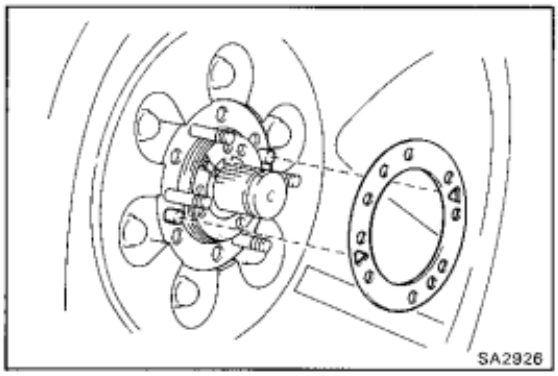

4. INSTALL POWER LOCKING HUB BODY SUBASSEMBLY

(a) Align the knock-pin of the axle hub and a new gasket's triangular hole, and install a gasket to the axle hub.

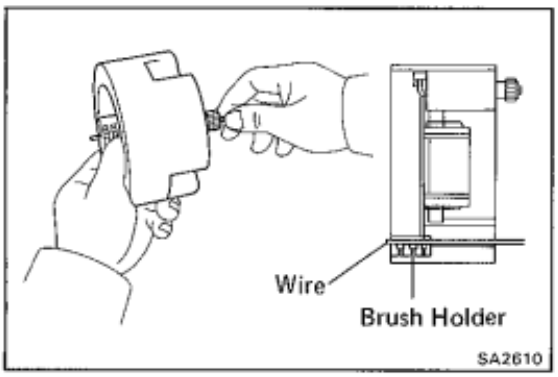

(b) Using a wire or an equivalent, fix the brush as shown.

NOTICE: Do not allow oil or grease to get on the brush.

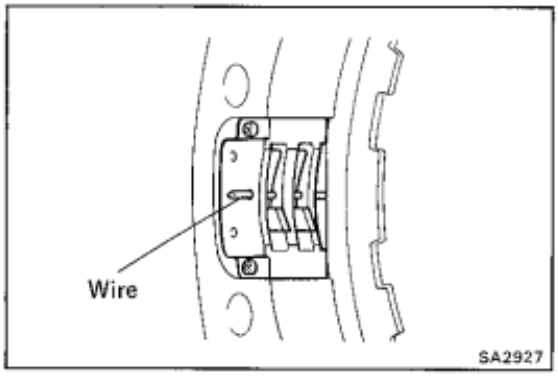

(c) Check that the brush is hold in the brush holder.

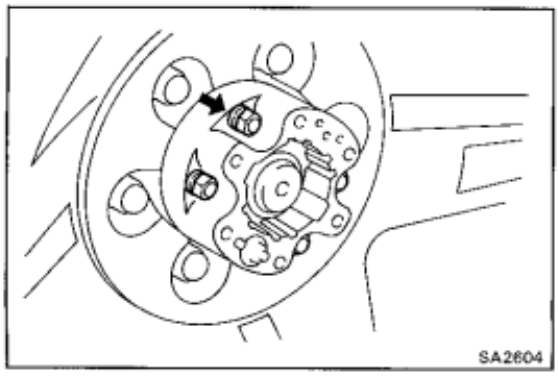

(d) Install the hub body subassembly to the axle hub with the four cone washers, washers and nuts.

Torque: 315 kg-cm (23 ft-lb, 31 N·m)

HINT: Before installing the hub body subassembly, check that the brush fixed.

(e) Remove the wire or and equivalent from the power locking hub body subassembly.

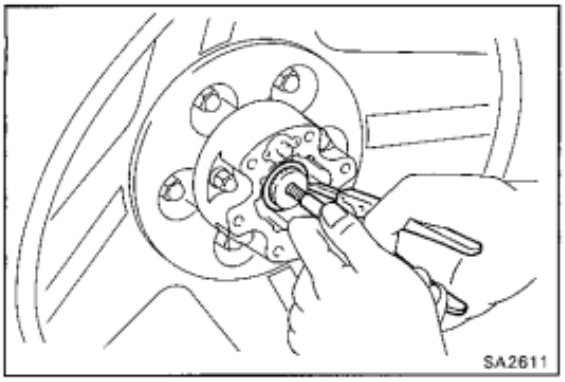

5. **INSTALL SNAP RING**

(a) Install a bolt to the drive shaft and pull it out.

(b) Using snap ring pliers, install the snap ring.

(c) Remove the bolt.

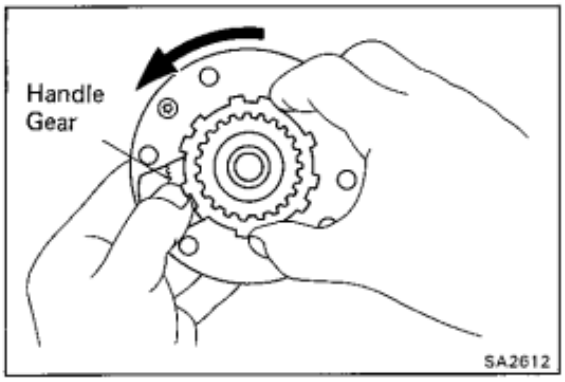

6. **INSTALL POWER LOCKING HUB COVER SUB-ASSEMBLY**

(a) Hold the handle gear, turn the clutch counterclockwise and set the hub cover subassembly to "FREE" condition.

(b) Remove the backing paper from the new gasket and install the gasket to the hub cover subassembly.

NOTICE:

- **Install the sealant-covered surface of the gasket (from which the backing paper was removed) to the hub cover subassembly.**
- **Check that the gasket is properly aligned and that there is no unevenness.**

(c) Install the hub cover subassembly to the hub body assembly with the follower pawl tabs aligned with the non-toothed portions of the body.

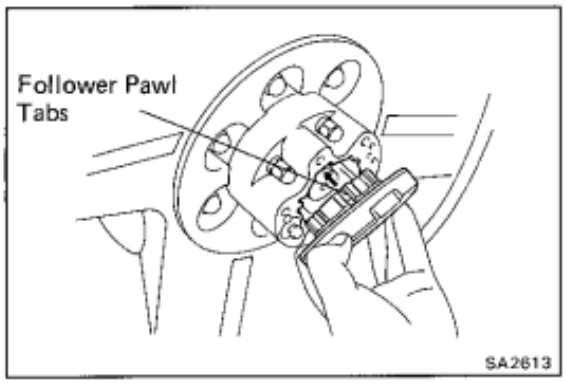

(d) Align the installation position of the 4WD control motor's pinion gear with that of the hub cover's handle gear, and install the hub cover subassembly.

NOTICE: With the hub cover subassembly lightly held down by hand onto the hub body subassembly, check that there is no pace between the hub body subassembly and hub cover subassembly.

HINT: If there is a gap between the hub body subassembly and hub cover subassembly when the set bolt is tightened, the motor, the gasket etc. will be damaged, so again check steps (1) — (4) above and check that there is no gap between the hub body subassembly and hub cover subassembly.

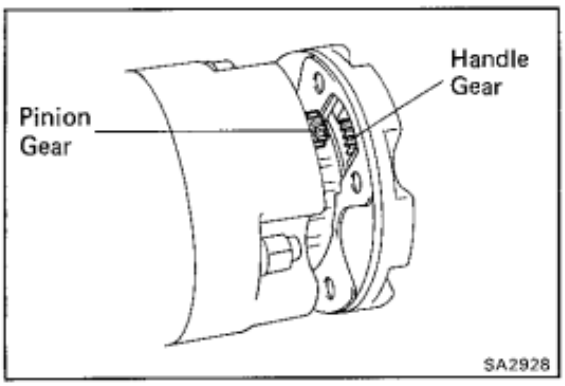

(e) Apply sealant to the threads of the set bolts.

Sealant: Part No. 08833-00080, THREE BOND 1344, LOCTITE 242 or equivalent

(f) Using torx socket wrench, install and torque the six set bolts.

(Torx socket wrench T40 09042-00020)

Torque: 315 kg-cm (23 ft-lb, 31 N·m)

NOTICE: After temporarily tightening diagonally opposite hub cover bolts to 200 kg-cm (14 ft-lb, 20 N·m), tighten them to the specified torque.

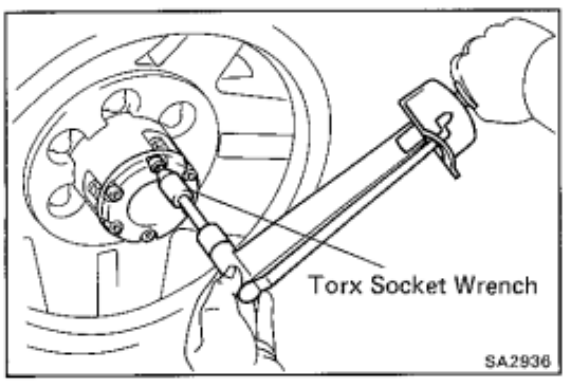

7. **CHECK OPERATION**

FRONT AXLE HUB

COMPONENTS

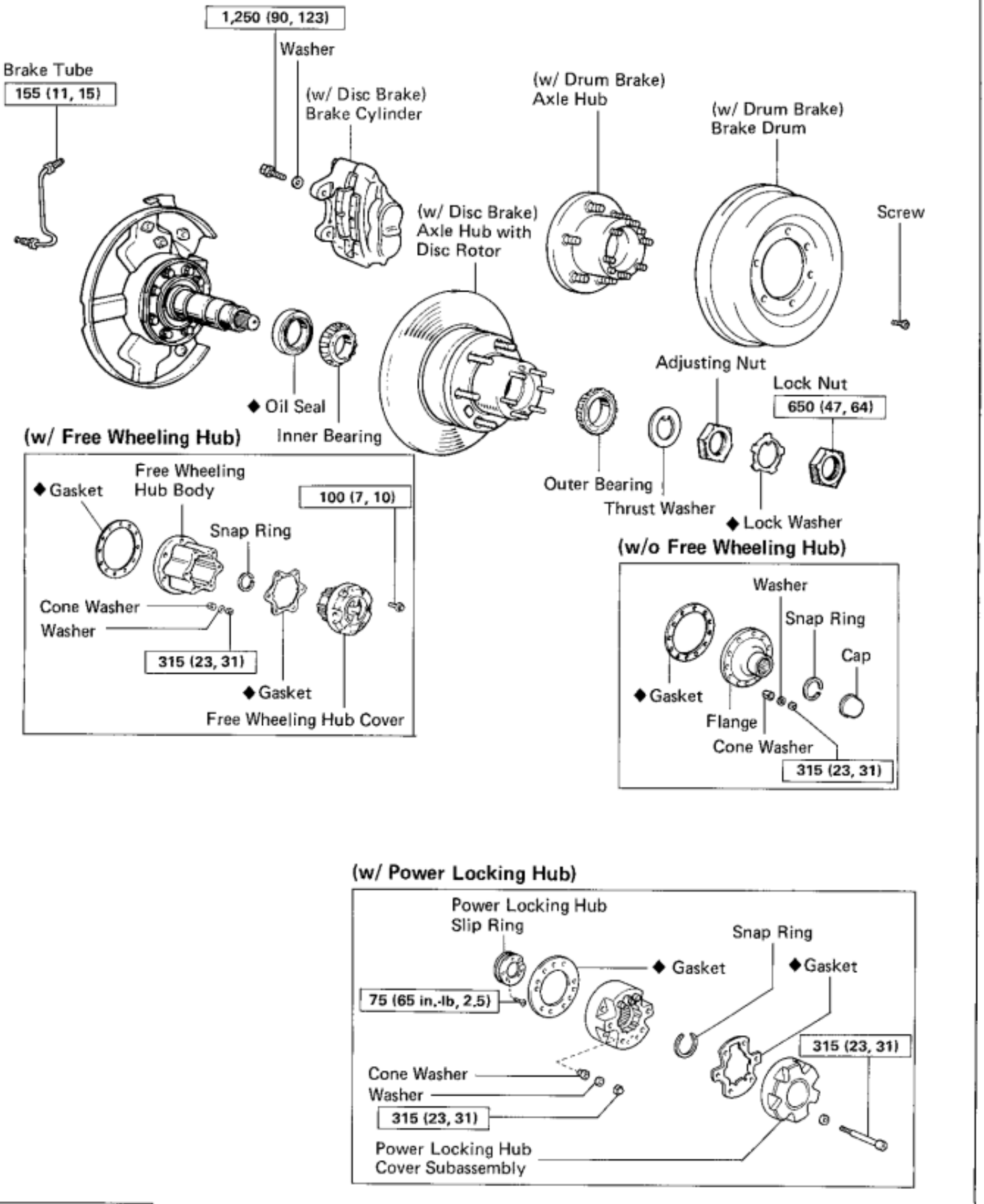

kg-cm (ft-lb, N·m) : Specified torque

◆ Non-reusable part

SA2880
SA2881

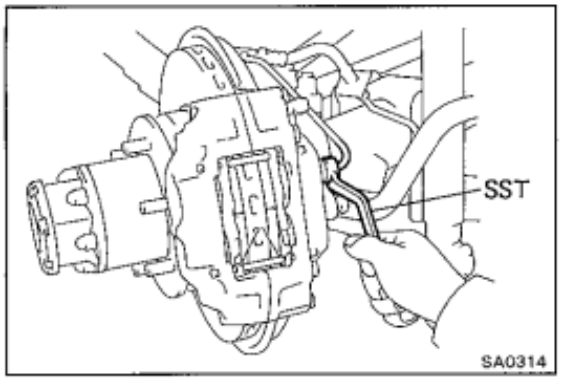

DISASSEMBLY OF FRONT AXLE HUB

(See page SA-29)

1. **(w/ DISC BRAKE)**
REMOVE DISC BRAKE CYLINDER

(a) Using SST, disconnect the brake tube.

SST 09751-36011

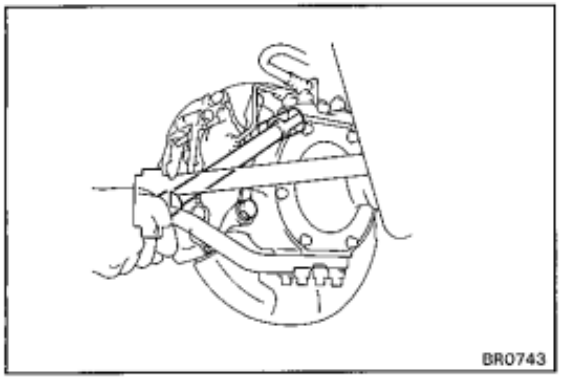

(b) Remove the two bolts and brake cylinder.

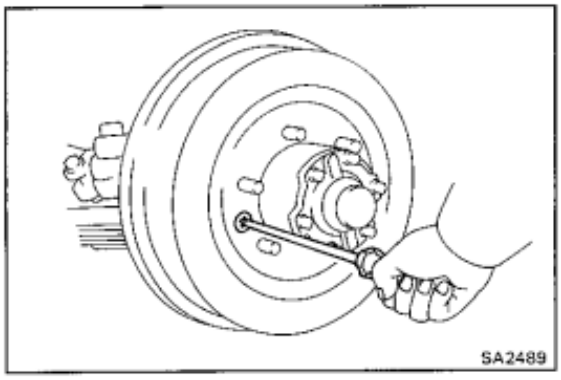

2. **(w/ DRUM BRAKE)**
REMOVE BRAKE DRUM

(a) Remove the screw from the drum.

(b) Pull out the brake drum.

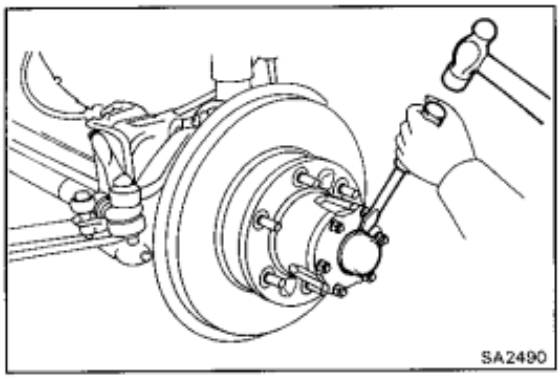

3. **REMOVE FLANGE, FREE WHEELING HUB OR POWER LOCKING HUB**

HINT:

- If the vehicle has the free wheeling hub, see page SA-6.
- If the vehicle has the power locking hub, see page SA-23.

(a) Using a screwdriver and hammer, remove the cap from the flange.

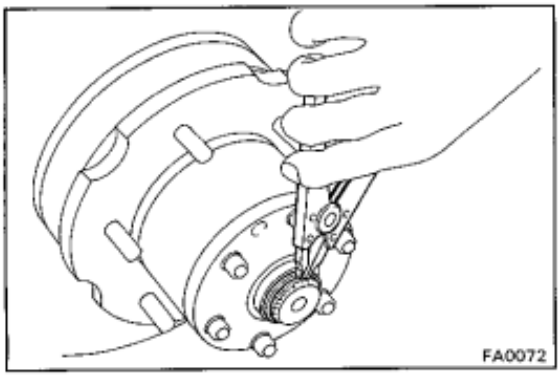

(b) Using snap ring pliers, remove the snap ring.

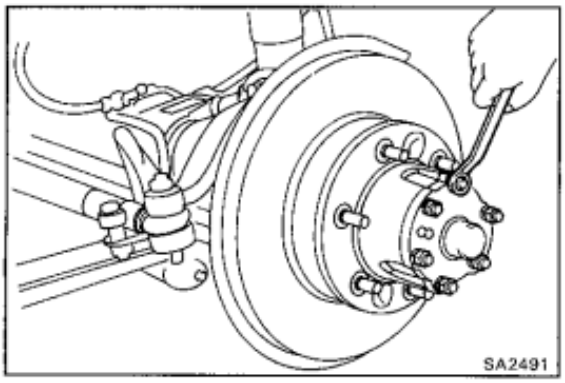

(c) Remove the six mounting nuts and washers.

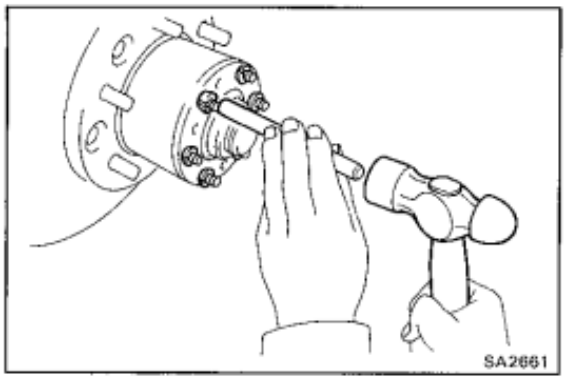

(d) Using a brass bar and hammer, tap the bolt heads and remove the cone washers.

(e) Pull out the flange.

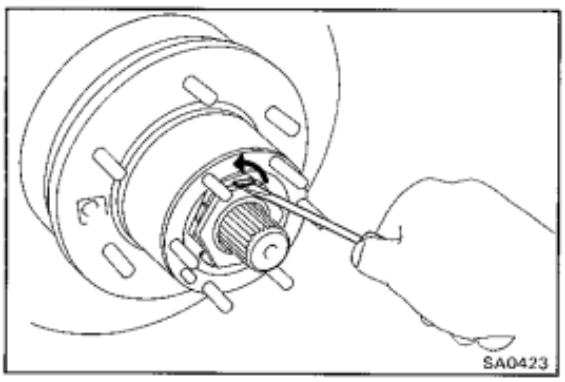

4. REMOVE AXLE HUB

(a) Using a screwdriver, loosen the staked part of the lock washer.

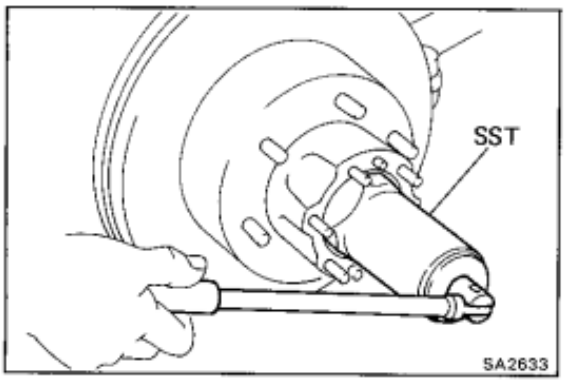

(b) Using SST, remove the lock nut.

SST 09607-60020

(c) Remove the lock washer.

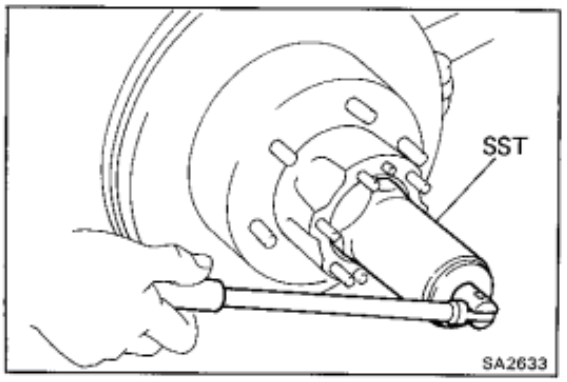

(d) Using SST, remove the adjusting nut.

SST 09607-60020

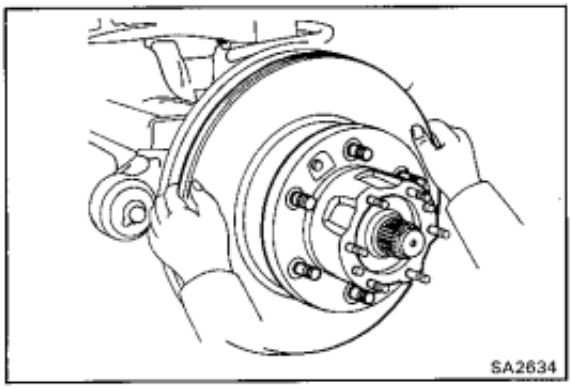

(e) (w/ Disc Brake)
Remove the axle hub with the disc rotor.

HINT: (w/ Power Locking Hub)
Before removing the boot, wrap vinyl tape around the tip of the spindle.

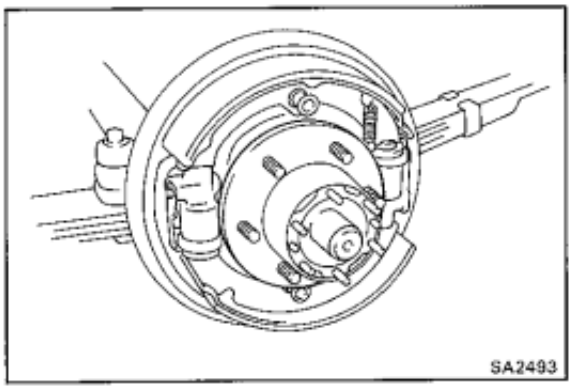

(f) (w/ Drum Brake)
Remove the axle hub.

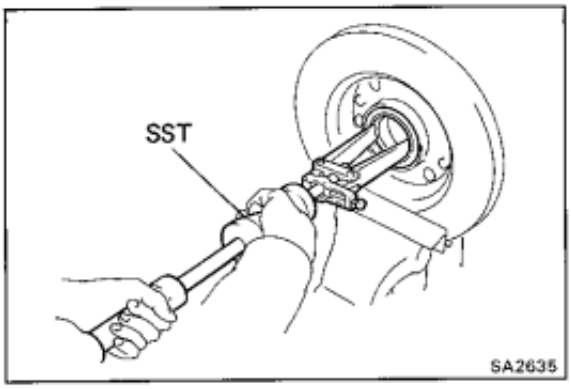

5. REMOVE INNER BEARING AND OIL SEAL

(a) Using SST, remove the oil seal.

SST 09308-00010

(b) Remove the inner bearing from the axle hub.

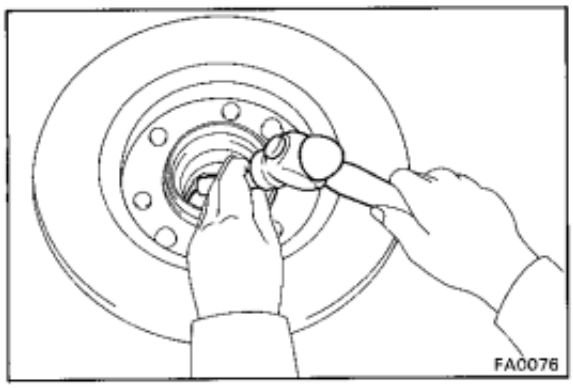

INSPECTION AND REPAIR OF FRONT AXLE HUB

1. INSPECT BEARING

Clean the bearings and outer races and inspect them for wear or damage.

2. REPLACE BEARING OUTER RACE

(a) Using a brass bar and hammer, drive out the bearing outer race.

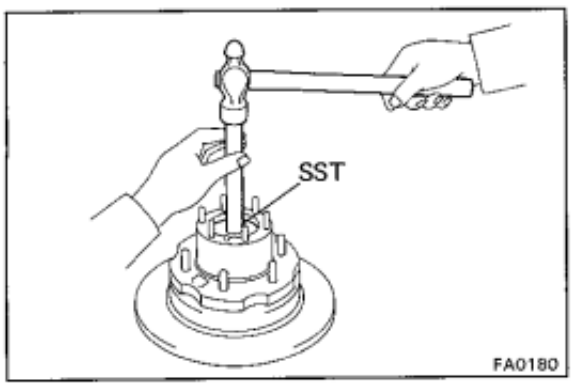

(b) Using SST, carefully drive in a new bearing outer race.

SST 09608-35014

Inner Bearing (09608-06020, 09608-06210)
Outer Bearing (09608-06020, 09608-06200)

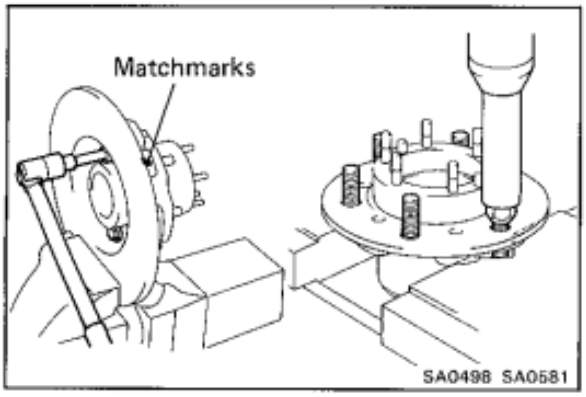

3. REPLACE HUB BOLTS

(a) Place matchmarks on the axle hub and rotor disc.

(b) Remove the six bolts and rotor disc from the axle hub.

(c) Install the nut to the hub bolts.

(d) Using an extension bar and press, press out the hub bolts.

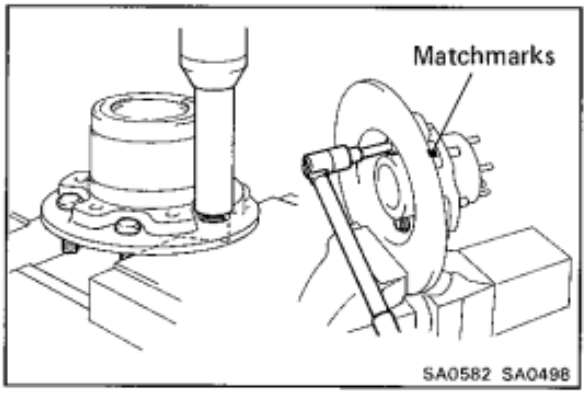

(e) Using an extension bar and press, press in the hub bolts.

(f) Align the matchmarks install the axle hub to the rotor disc.

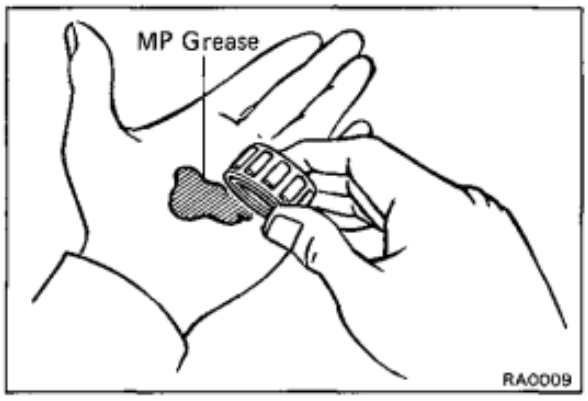

ASSEMBLY OF FRONT AXLE HUB

(See page SA-29)

1. PACK BEARINGS WITH MP GREASE

(a) Place MP grease in the palm of your hand.

(b) Pack grease into the bearing, continuing until the grease oozes out from the other side.

(c) Do the same around the bearing circumference.

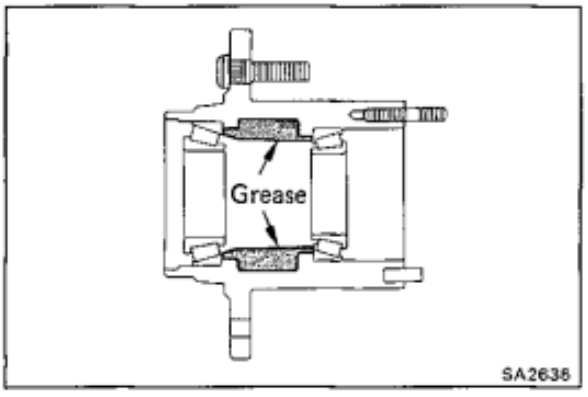

2. PACK INSIDE OF HUB WITH MP GREASE

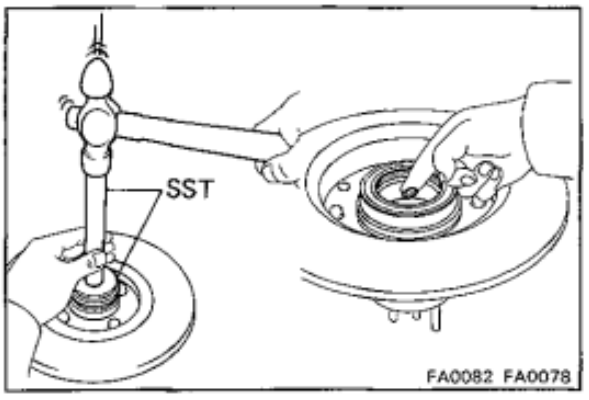

3. INSTALL INNER BEARING AND OIL SEAL

(a) Place inner bearing into the hub.

(b) Using SST, drive in the oil seal into the hub.

SST 09608-35014 (09608-06020, 09608-06150)

(c) Coat the oil seal with MP grease.

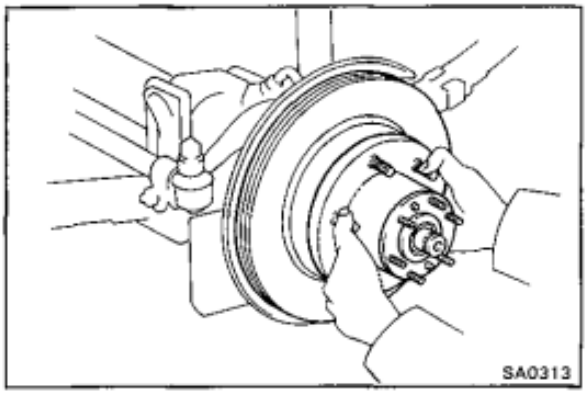

4. INSTALL AXLE HUB ON SPINDLE

(a) Place the axle hub on the spindle.

(b) Install the outer bearing and thrust washer.

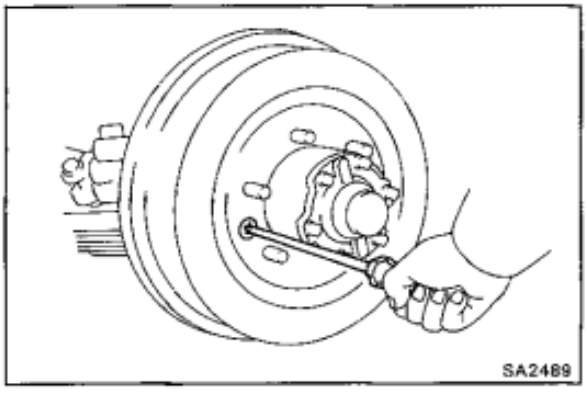

5. (w/ DRUM BRAKE) INSTALL BRAKE DRUM

(a) Install the brake drum to the axle hub.

(b) Install the screw to the brake drum.

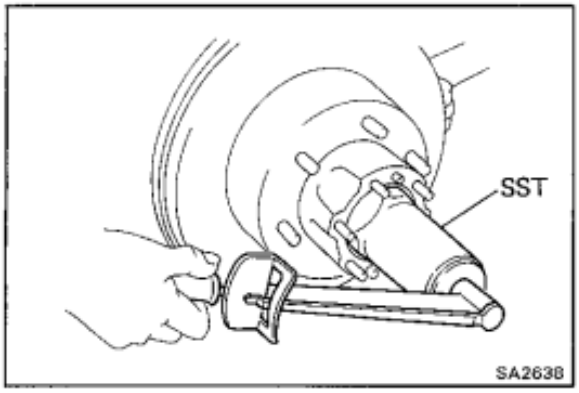

6. ADJUST PRELOAD

(a) (w/ Power Locking Hub)
Remove the vinyl tape from the tip of spindle.

(b) Using SST, torque the bearing adjusting nut.

SST 09607-60020

Torque: 600 kg-cm (43 ft-lb, 59 N·m)

HINT: Be careful not to damage the oil seal.

(c) Turn the hub right and left two or three times.

(d) Loosen the nut until it can be turned by hand.

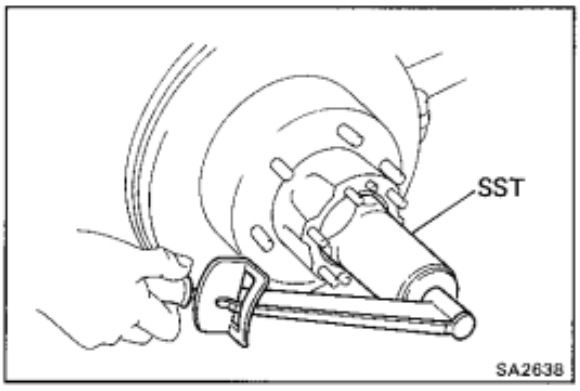

(e) Using SST, retorque the bearing adjusting nut.

SST 09607-60020

Torque: 600 kg-cm (43 ft-lb, 59 N·m)

(f) Loosen the nut until it can be turned by hand.

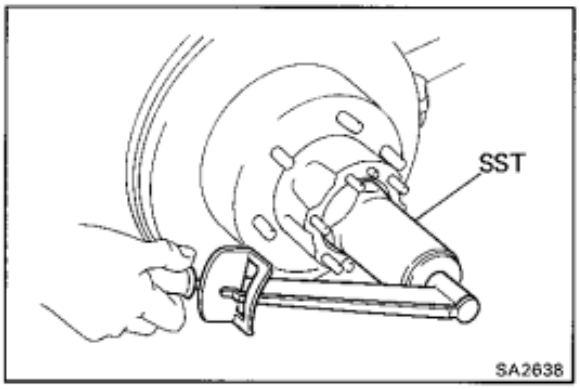

(g) Retorque the adjusting nut.

SST 09607-60020

Torque: 55 kg-cm (48 in.-lb, 5.4 N·m)

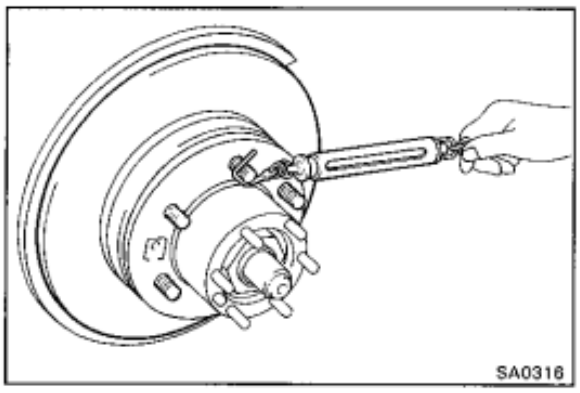

(h) Using a spring tension gauge, measure the preload.

Preload (starting):
Preload 2.8 — 5.7 kg
(6.2 — 12.6 lb, 27 — 56 N)

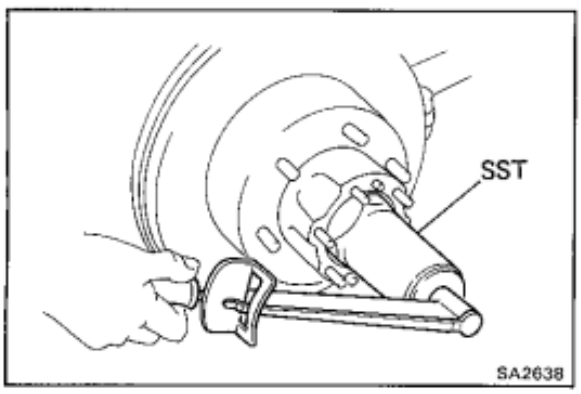

7. INSTALL LOCK WASHER AND LOCK NUT

(a) Install the lock washer and lock nut.

(b) Using SST, torque the lock nut.

SST 09607-60020

Torque: 650 kg-cm (47 ft-lb, 64 N·m)

(c) Check that the bearing has no play.

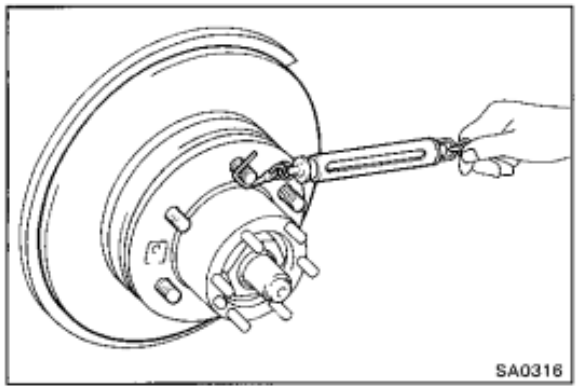

(d) Using a spring tension gauge, check the preload.

Preload (starting):
Preload 2.8 — 5.7 kg
(6.2 — 12.6 lb, 27 — 56 N)

If not within specification, adjust with the adjusting nut.

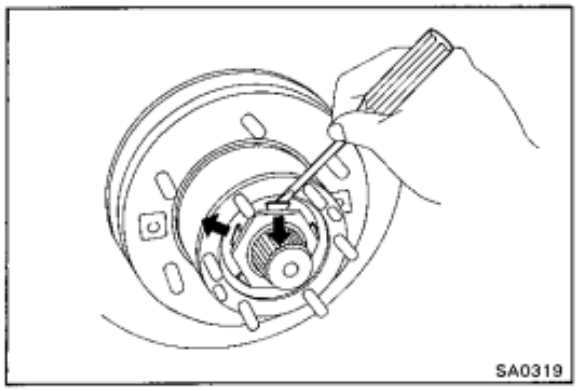

(e) Secure the lock nut by bending one of the lock washer tooth inward and another lock washer tooth outward.

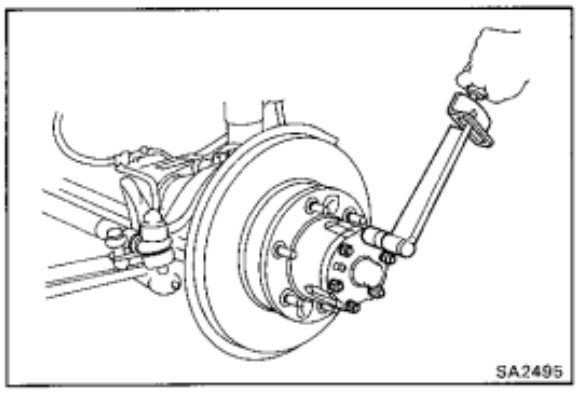

8. INSTALL FLANGE, FREE WHEELING HUB OR POWER LOCKING HUB

HINT:

- If the vehicle has the free wheeling hub, see page SA-13.
- If the vehicle has the power locking hub, see page SA-26.

(a) Place a new gasket in position on the axle hub.

(b) Install the flange to the axle hub.

(c) Install the six cone washers, washers and nuts. Torque the nuts.

Torque: 315 kg-cm (23 ft-lb, 31 N·m)

(d) Install a bolt to the axle shaft and pull it out.

(e) Using snap ring pliers, install the snap ring.

(f) Remove the bolt from the axle shaft.

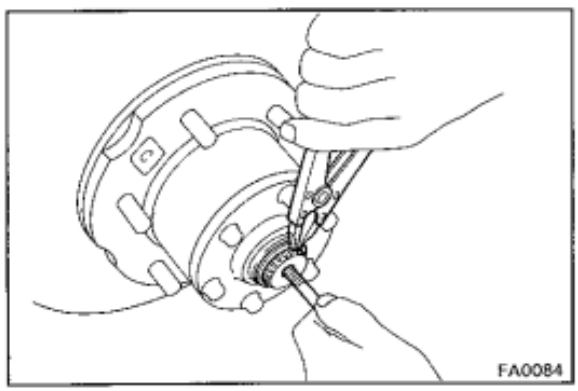

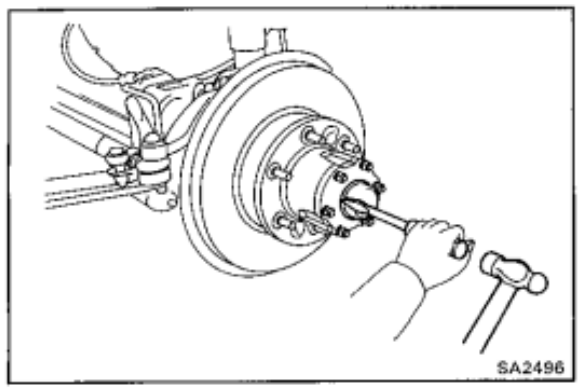

(g) Using a hammer and screwdriver, install the cap to the flange.

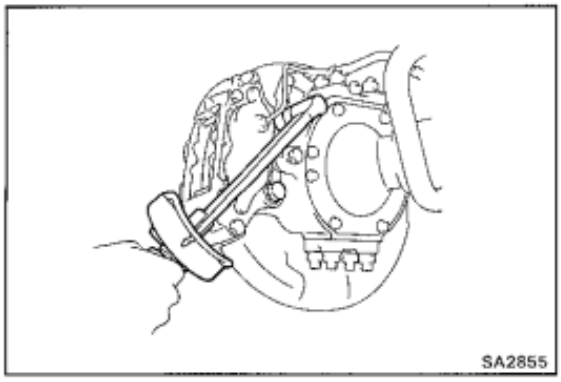

9. **(w/ DISC BRAKE)**
INSTALL BRAKE CYLINDER

(a) Install the brake cylinder to the steering knuckle with the two bolts.
Torque the mounting bolts.

Torque: 1,250 kg-cm (90 ft-lb, 123 N·m)

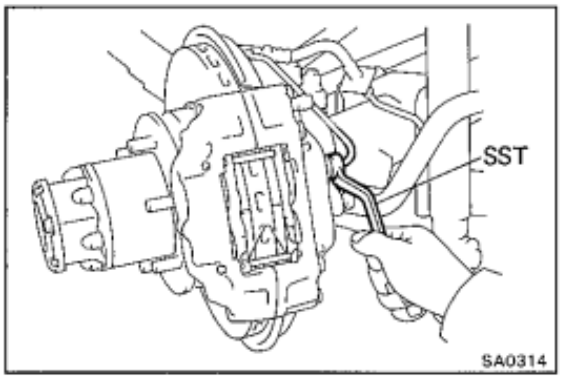

(b) Using SST, connect the brake tube.

SST 09751-36011

Torque: 155 kg-cm (11 ft-lb, 15 N·m)

10. **BLEED BRAKE LINE**
(See page BR-7)

STEERING KNUCKLE AND AXLE SHAFT

COMPONENTS

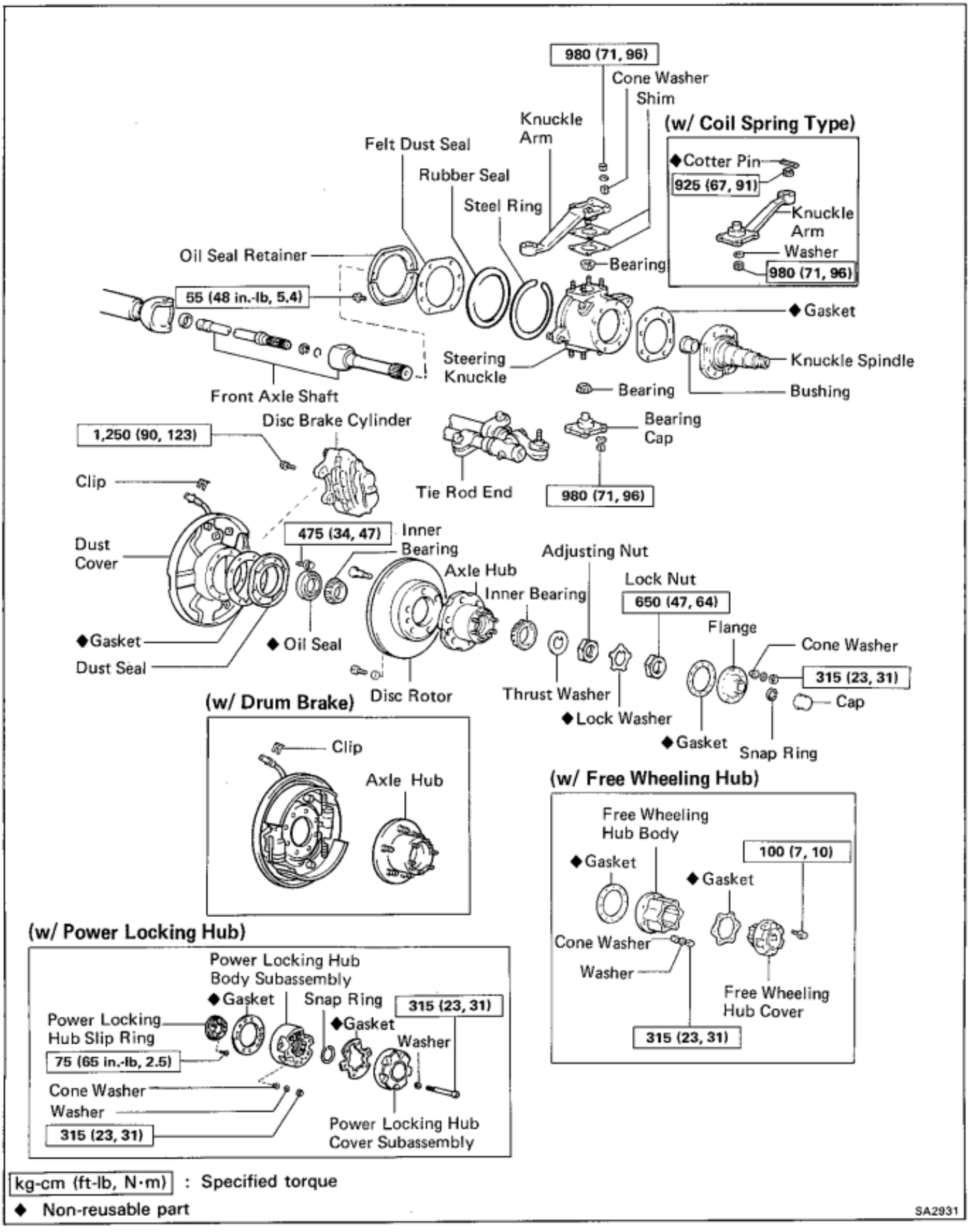

kg-cm (ft-lb, N·m) : Specified torque

◆ Non-reusable part

SA2931

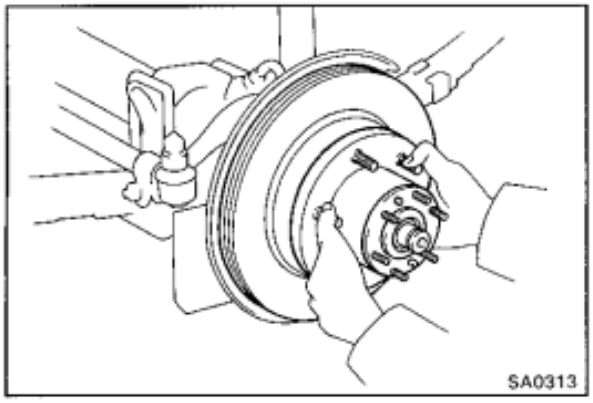

DISASSEMBLY OF STEERING KNUCKLE AND AXLE SHAFT

(See page SA-38)

1. **REMOVE FRONT AXLE HUB**
(See page SA-29)

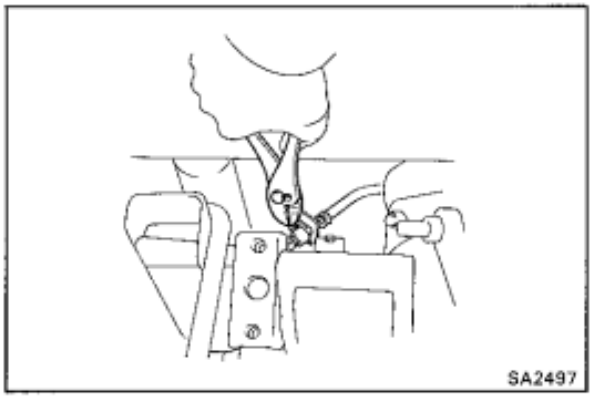

2. **DISCONNECT BRAKE HOSE**
   (a) Using pliers, remove the clip.

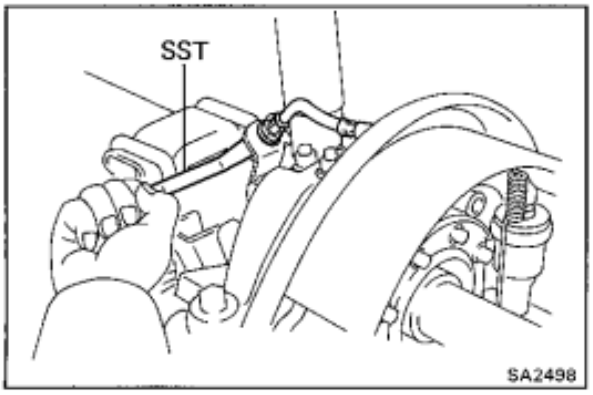

   (b) Using SST, disconnect the brake tube.
   SST 09751-36011

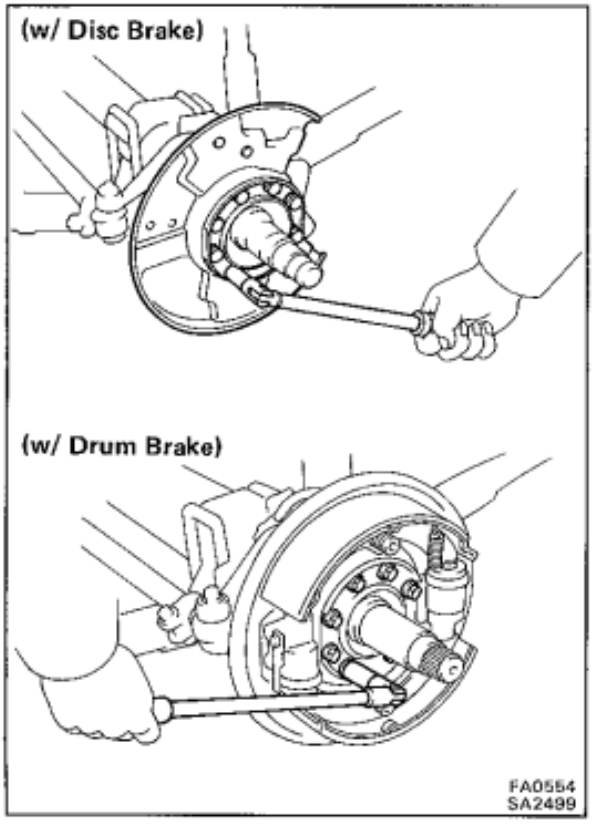

3. **REMOVE KNUCKLE SPINDLE MOUNTING BOLTS**

4. **REMOVE DUST SEAL AND DUST COVER**
   Remove the eight bolts, dust seal, dust cover and gasket.

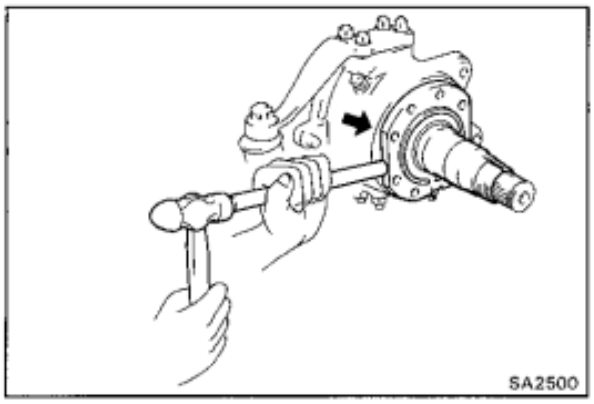

5. REMOVE KNUCKLE SPINDLE

(a) (w/ Power Locking Hub)
Disconnect the connector.

(b) Using a brass bar and hammer, drive out the knuckle spindle from the steering knuckle.

6. REMOVE AXLE SHAFT

Position one flat part of the outer shaft upward and pull out the axle shaft.

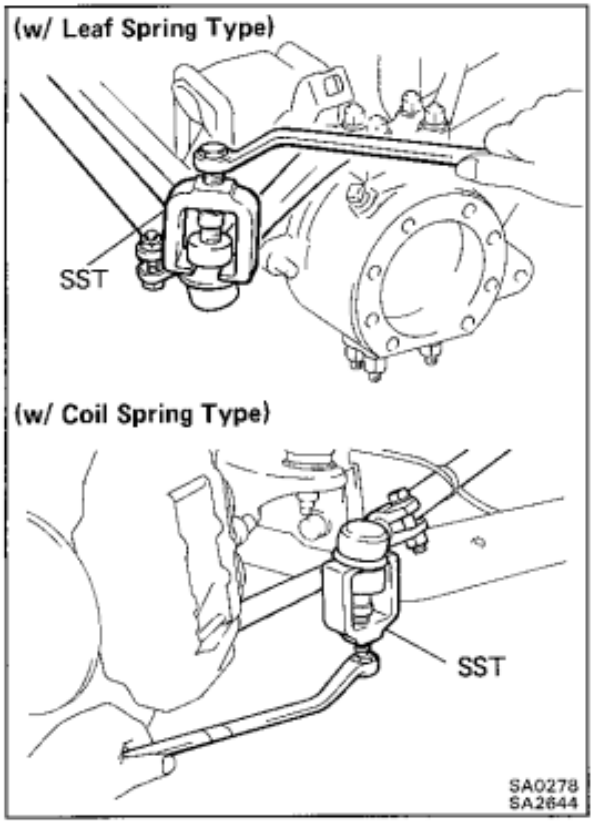

7. DISCONNECT TIE ROD END FROM KNUCKLE ARM

(a) Remove the cotter pin and castle nut.

(b) Using SST, disconnect the tie rod end from the knuckle arm.

SST 09611-22012

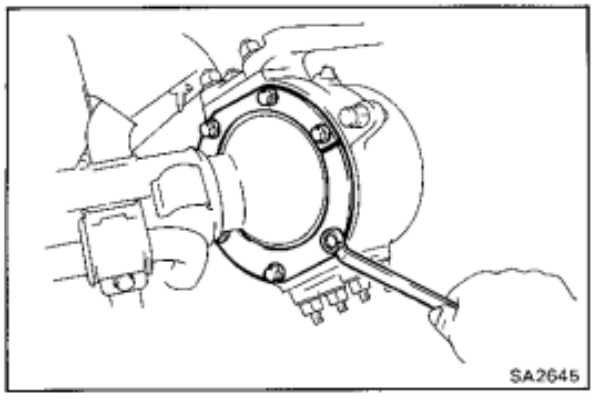

8. REMOVE OIL SEAL RETAINER, STEEL RING, RUBBER SEAL AND FELT DUST SEAL

Remove the six bolts and the oil seal retainer, steel ring, rubber seal and felt dust seal.

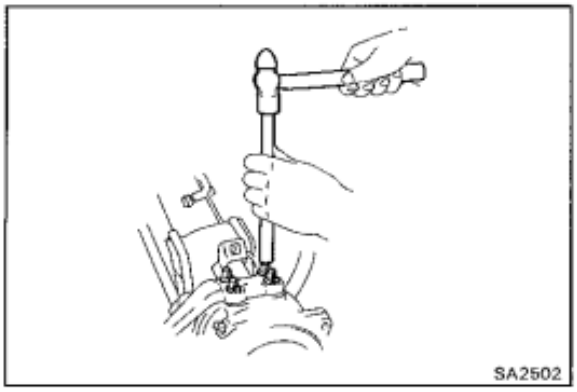
SA2502

9. REMOVE KNUCKLE ARM AND BEARING CAP

(a) Remove the knuckle arm and bearing cap mounting nuts.

(b) Using a brass bar, tap the slits of the cone washers and remove them from the knuckle arm.

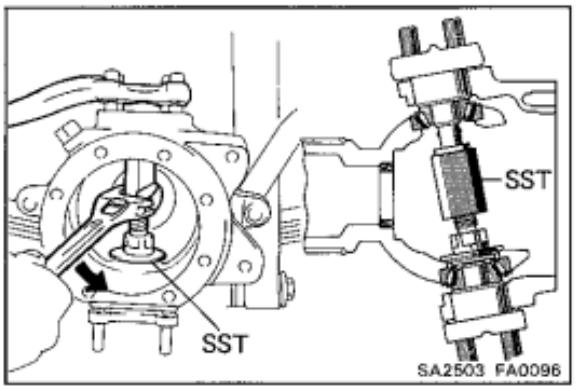

SA2503 FA0096

(c) Using SST, push out the knuckle arm and shims from the steering knuckle.

SST 09606-60020

HINT: Use the SST without a collar.

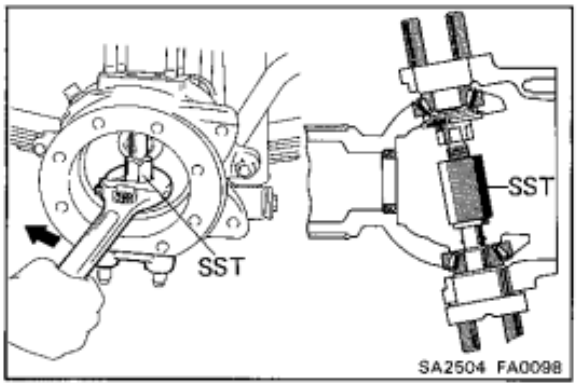

SA2504 FA0098

(d) Using SST, push out the bearing cap from the steering knuckle.

SST 09606-60020

10. REMOVE STEERING KNUCKLE AND BEARING

HINT: Mark the removed adjusting shims and bearings so as to enable reassembling them to their proper positions.

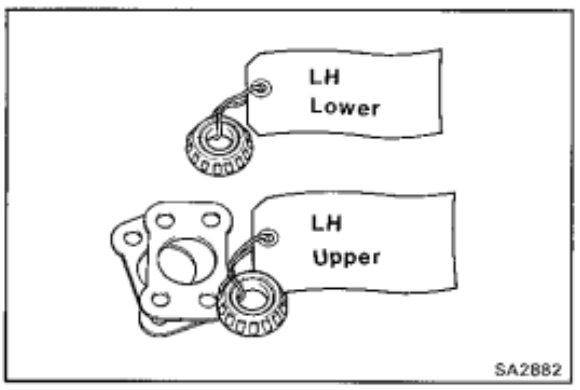

SA2882

INSPECTION AND REPAIR OF STEERING KNUCKLE AND AXLE SHAFT

1. INSPECT KNUCKLE SPINDLE

Clean the knuckle spindle and inspect the bushing for wear or damage.

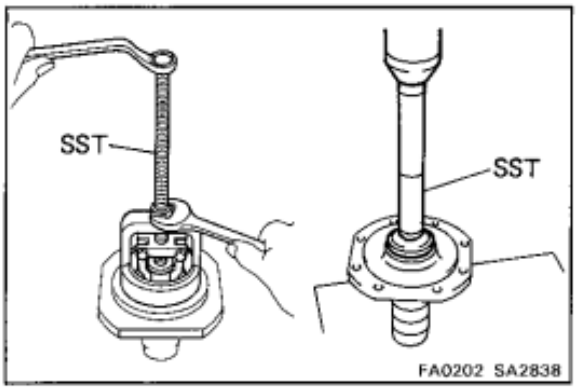

2. REPLACE BUSHING

(a) Using SST, remove the bushing.

SST 09612-65014 (09612-01020, 09612-01050)

(b) Using SST, press a new bushing into the spindle.

SST 09618-60010

3. INSPECT BEARINGS AND OUTER RACES

Clean the bearings and outer races and inspect them for wear or damage.

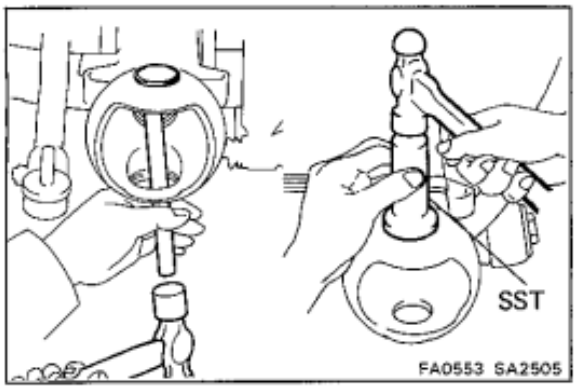

4. IF NECESSARY, REPLACE BEARING OUTER RACE

(a) Using a brass bar, drive out the bearing outer race.

(b) Using SST, carefully drive in a new bearing outer race.

SST 09605-60010

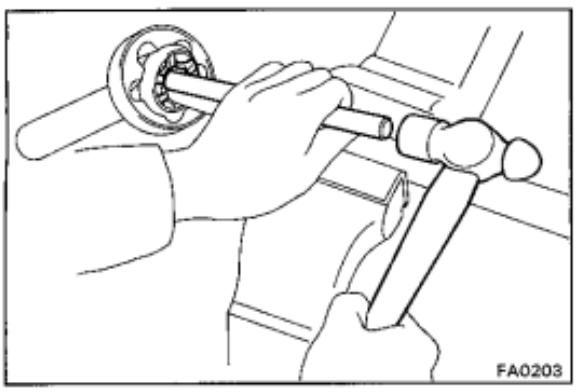

5. INSPECT BIRFIELD JOINT INNER PARTS

(a) Hold the inner shaft in a vise.

(b) Place a brass bar against the joint inner race and drive out the outer shaft.

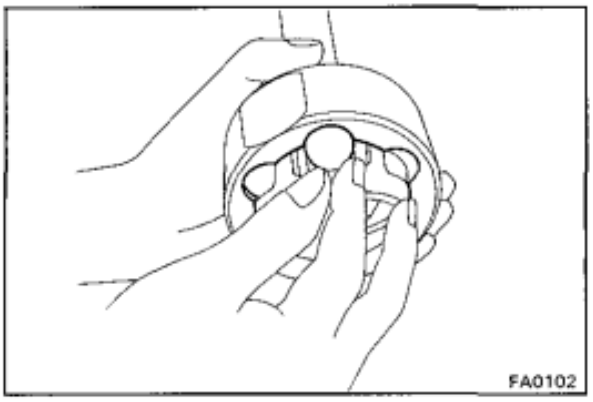

(c) Tilt the inner race and cage, then take out the bearing balls one by one.

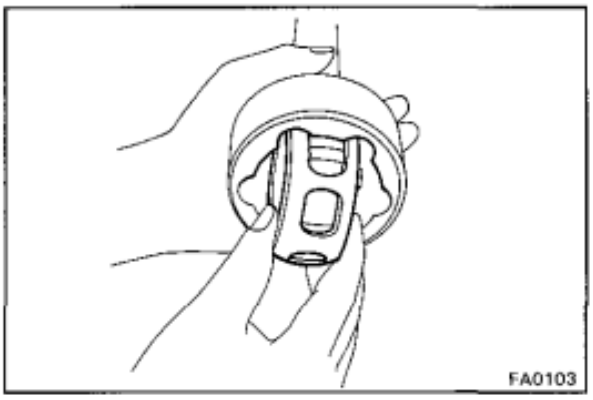

(d) Fit the two large openings in the cage against the protruding parts of the outer shaft, and pull out the cage and inner race.

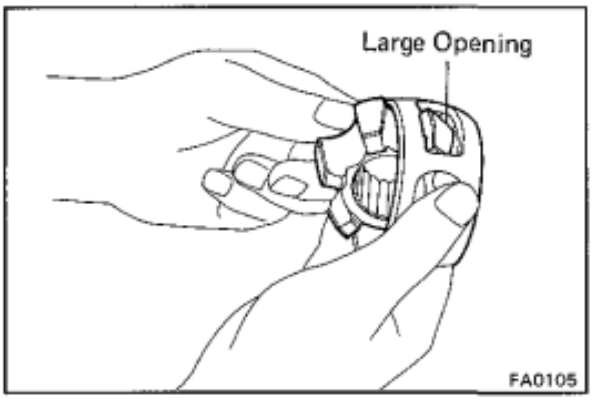

(e) Take out the inner race from the cage through the large opening.

(f) Clean and inspect the joint inner parts for wear or damage.

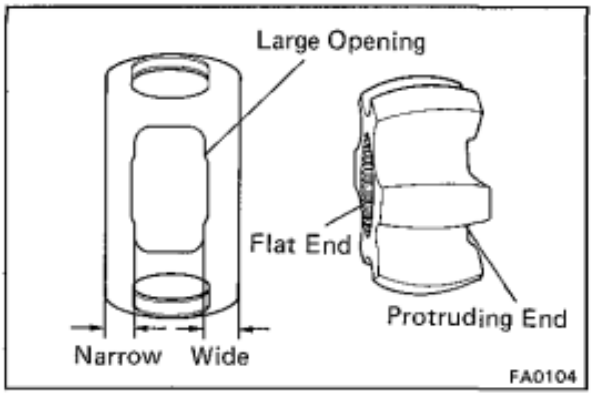

(g) Coat the joint inner parts and outer shaft inside with molybdenum disulphide lithium base grease.

(h) Insert the inner race in the cage through the large opening.

(i) Position the protruding end of the inner race toward the wide side of the cage.

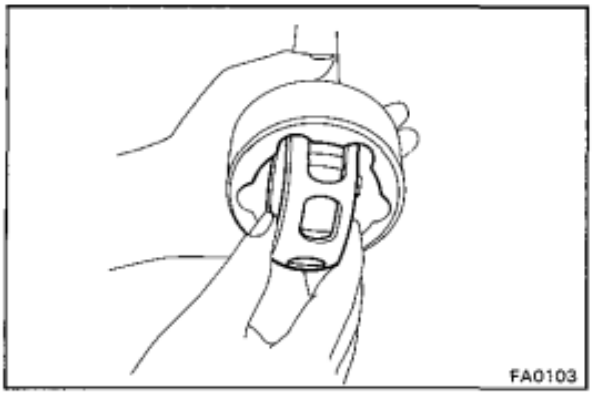

(j) Assemble the cage and inner race to the outer shaft by fitting the two large openings in the cage against the protruding parts of the outer shaft.

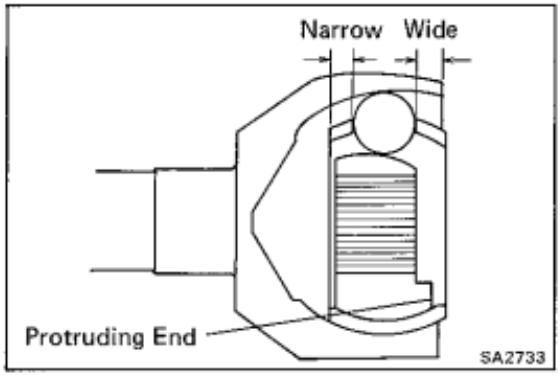

(k) Make sure to position the wide side of the cage and the inner race protruding end outward.

(l) Fit in the inner race and cage, and install the six bearing balls in the outer shaft. (See step (c))

(m) Pack molybdenum disulphide lithium base grease in the outer shaft.

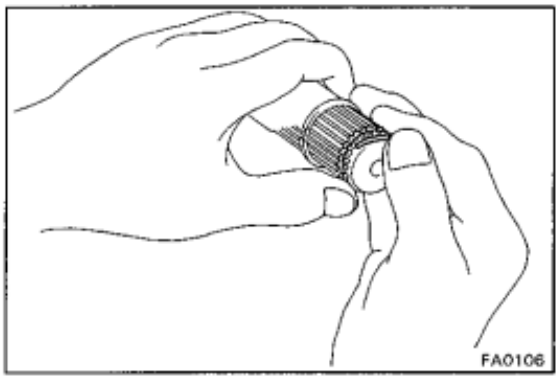

(n) Install a new snap rings to the inner shaft.

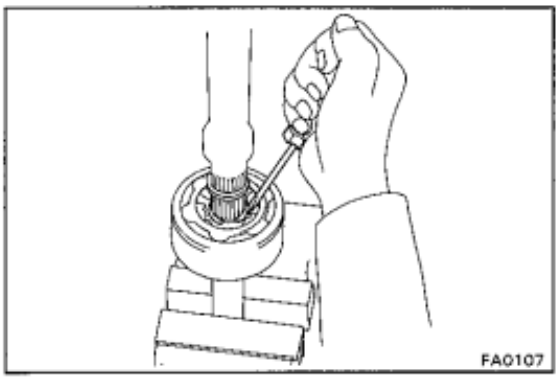

(o) Hold the outer shaft in a vise and, while compressing the inner snap ring, install the inner shaft to the outer shaft.

(p) Check that the inner shaft cannot be pulled out.

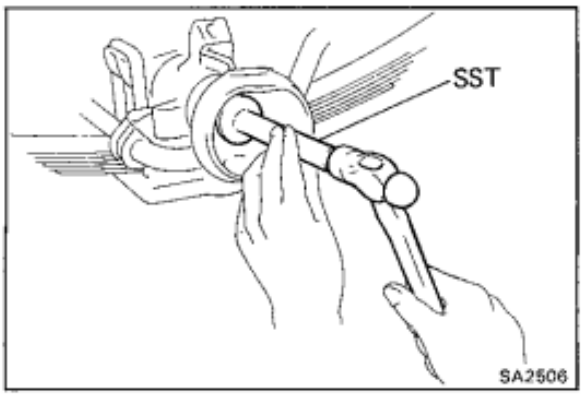

ASSEMBLY OF STEERING KNUCKLE AND AXLE SHAFT

(See page SA-38)

1. INSTALL OIL SEAL TO AXLE HOUSING

Using SST, drive in a new oil seal into the axle housing.

SST 09618-60010

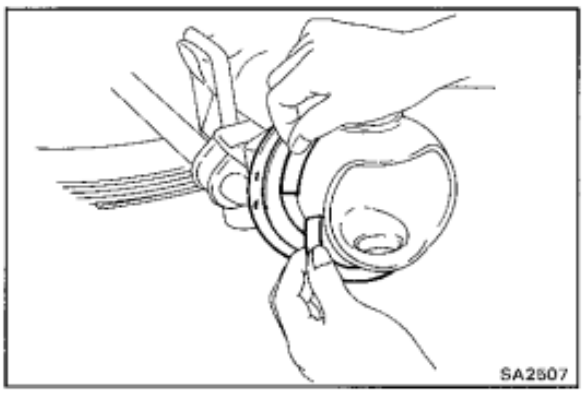

2. INSTALL FELT DUST SEAL, RUBBER SEAL, STEEL RING AND OIL SEAL RETAINER

Install the felt dust seal, rubber seal, steel ring and oil seal retainer to the axle housing.

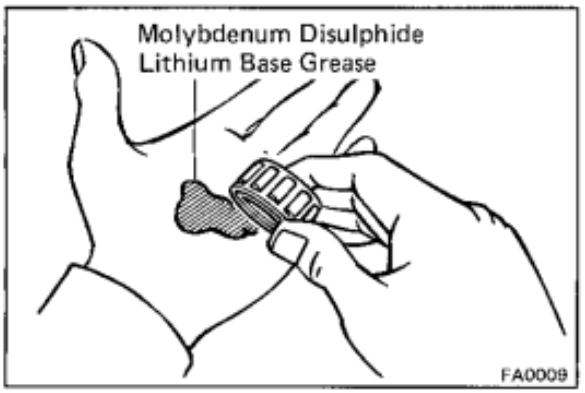

3. PACK BEARINGS WITH MOLYBDENUM DISULPHIDE LITHIUM BASE GREASE

(a) Place molybdenum disulphide lithium base grease in the palm of your hand.

(b) Pack grease into the bearing, continuing until the grease oozes out from the other side.

(c) Do the same around the bearing circumference.

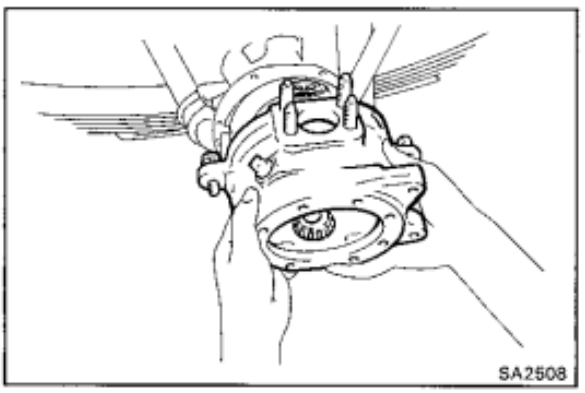

4. INSTALL STEERING KNUCKLE AND BEARINGS

(a) Place the bearings in positions to the knuckle and axle housing.

(b) Insert the knuckle to the axle housing.

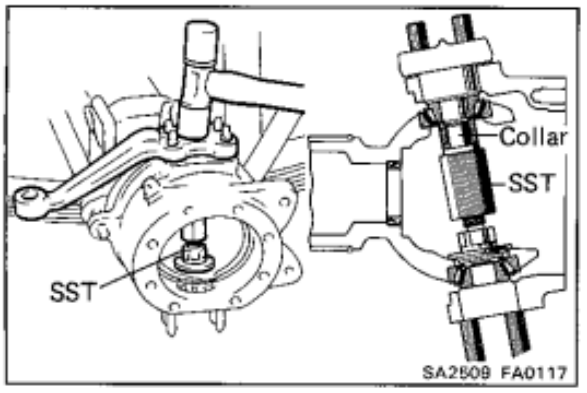

5. INSTALL KNUCKLE AND BEARING CAP

(a) Using SST, support the upper bearing inner race.

SST 09606-60020

HINT: Use SST with collar.

(b) Install the bearing cap or the knuckle arm over the shims that were originally used.

(c) Using a hammer, drive the bearing cap or the third arm into the bearing inner race.

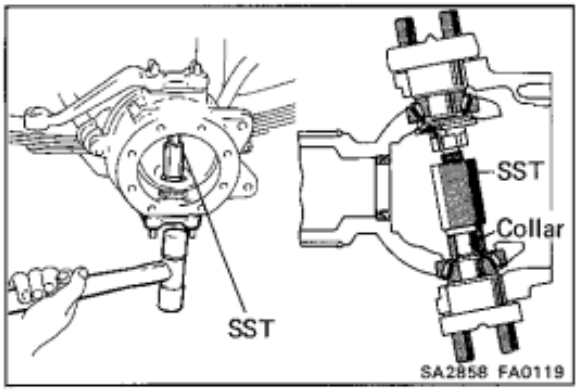

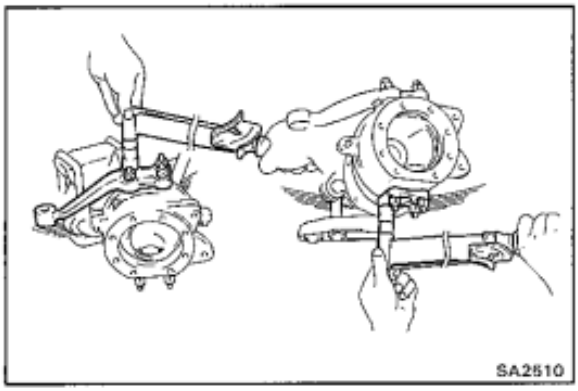

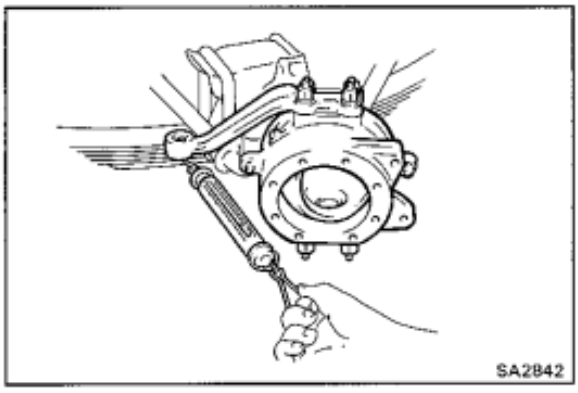

Adjusting shim thickness

Thickness mm (in.)
0.1 (0.004)
0.2 (0.008)
0.3 (0.012)
0.5 (0.020)
1.0 (0.039)

(d) Using SST, support the lower bearing inner race.

SST 09606-60020

HINT: Use SST with collar.

(e) Install the bearing cap or the knuckle arm.

(f) Using a hammer, drive the knuckle arm into the bearing inner race.

(g) Remove SST from the knuckle.

SST 09606-60020

(h) Install and torque the nuts.

(Knuckle Arm)
Install the cone washers, spring washers, nut and the four nuts and torque the nuts.

Torque: 980 kg-cm (71 ft-lb, 96 N·m)

(Third Arm)
Install the cone washers, spring washers, nut and four nuts and torque the nuts.

Torque: 980 kg-cm (71 ft-lb, 96 N·m)

(Bearing Cap)
Install the spring washers and four nuts and torque the nuts.

Torque: 980 kg-cm (71 ft-lb, 96 N·m)

6. CHECK BEARINGS PRELOAD

Using a spring tension gauge, measure the preload.

Preload (starting):
RJ, LJ
2.5 — 4.5 kg (5.5 — 9.9 lb, 25 — 44 N)
FJ, PZJ, HZJ
3.0 — 6.5 kg (6.6 — 14.3 lb, 29 — 64 N)

If the bearing preload is not within specification, adjust it by replacing the adjusting shims.

HINT:

- If the bearing preload is excessive, use thicker shims.
- If the bearing preload is insufficient, use thinner shims.
- The preload will change about 0.1 — 0.2 kg (0.2 — 0.4 lb, 1.0 — 2.0 N) with each 0.1 mm (0.004 in.) alteration of the adjusting shim thickness.

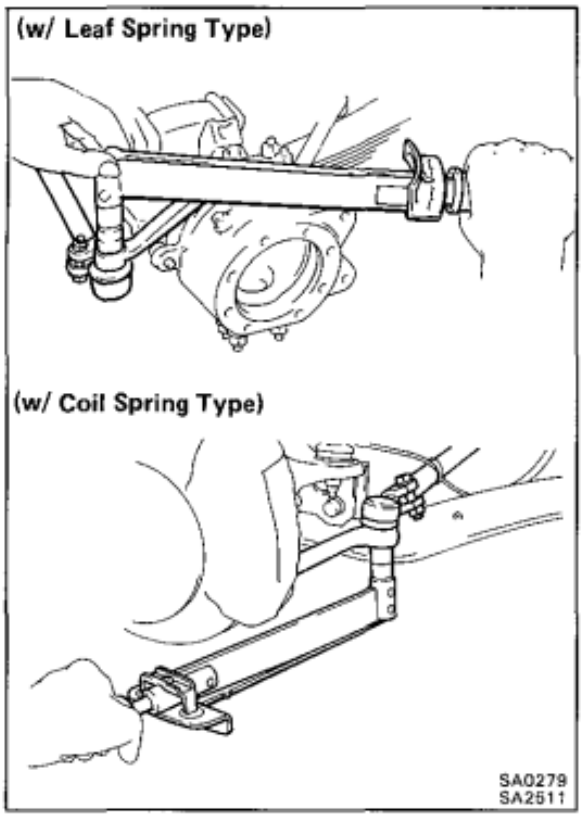

7. CONNECT TIE ROD TO KNUCKLE ARM

Torque the castle nut and secure it with a new cotter pin.

Torque: 925 kg-cm (67 ft-lb, 91 N·m)

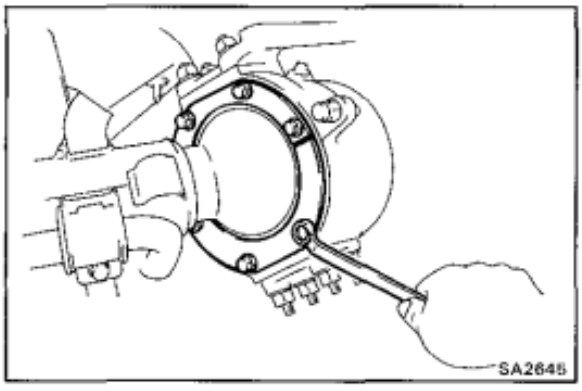

8. INSTALL FELT DUST SEAL, RUBBER SEAL, STEEL RING AND OIL SEAL RETAINER

Install the felt dust seal, rubber seal, steel ring and oil seal retainer to steering knuckle with the six bolts.

Torque: 55 kg-cm (48 in.-lb, 5.4 N·m)

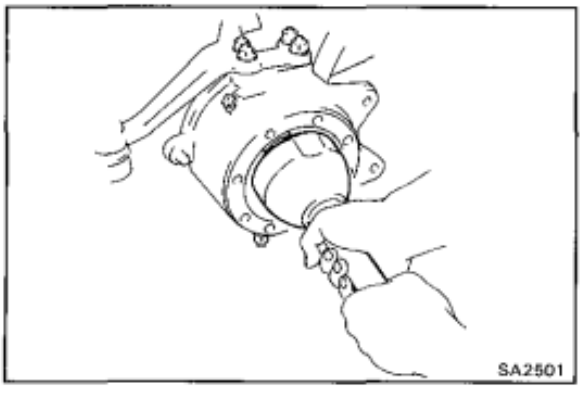

9. INSTALL AXLE SHAFT

Position one flat part of the outer shaft upward, and install the shaft.

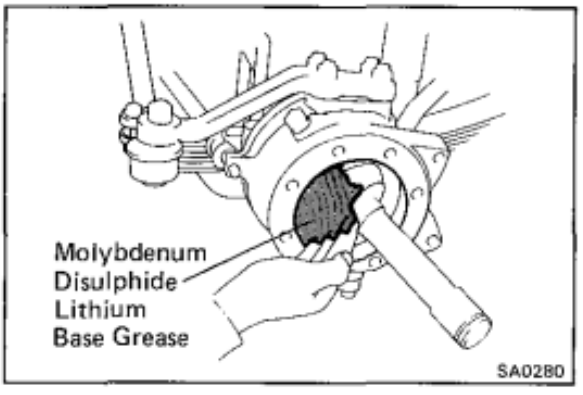

10. PACK MOLYBDENUM DISULPHIDE LITHIUM BASE GREASE

Pack molybdenum disulphide lithium base grease into the knuckle to about three fourths of the knuckle.

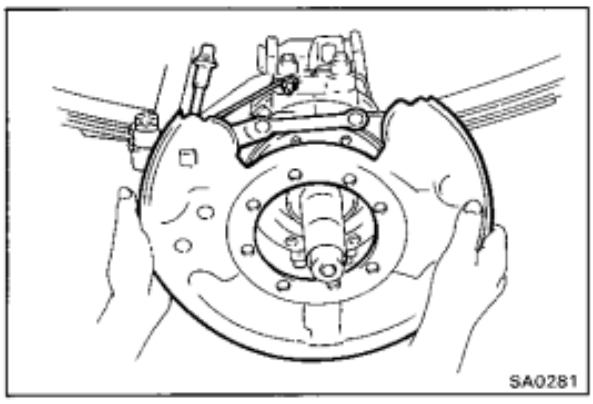
SA0281

11. INSTALL KNUCKLE SPINDLE, DUST COVER WITH NEW GASKETS AND DUST SEAL

(a) Place a new gasket in position on the knuckle and install the spindle.

NOTICE: (w/ Power Locking Hub)

- **Be careful not to get the wire harness and gum grommet between the spindle and the knuckle.**
- **Check that the vinyl tape come off the spindle.**

(b) Place the gasket, dust cover and dust seal on the spindle.

(c) Torque the spindle mounting bolts.

Torque: 475 kg-cm (34 ft-lb, 47 N·m)

(d) (w/ Power Locking Hub)
Connect the connector.

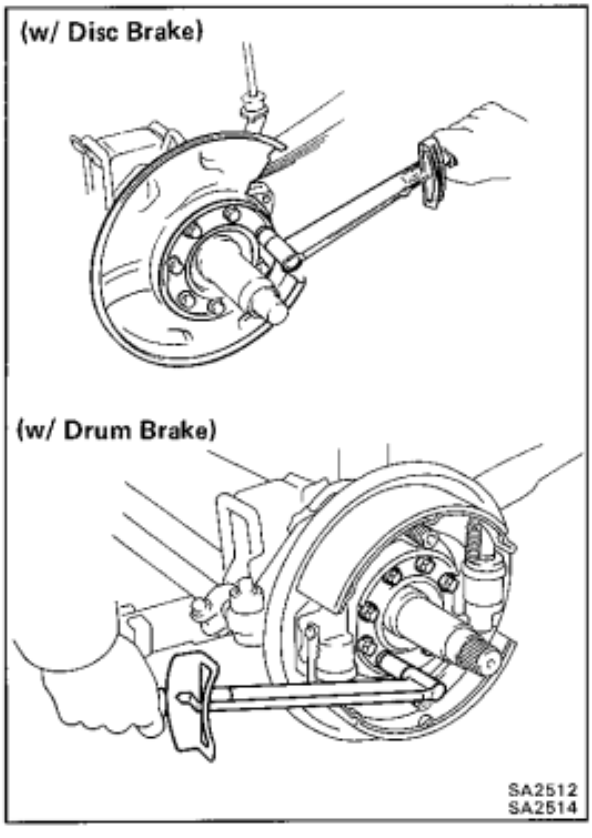

SA2512
SA2514

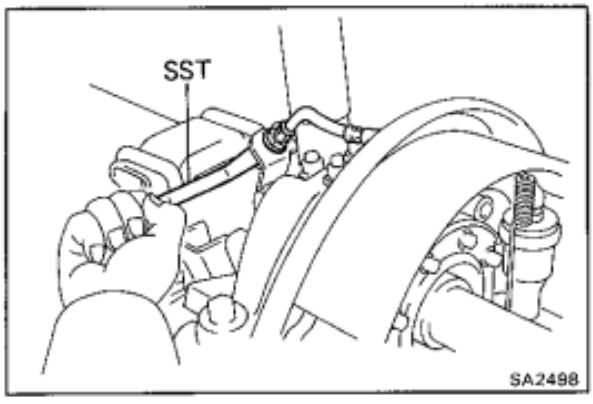

SA2498

12. CONNECT BRAKE HOSE

(a) Using SST, connect the brake tube.

SST 09751-36011

Torque: 155 kg-cm (11 ft-lb, 15 N·m)

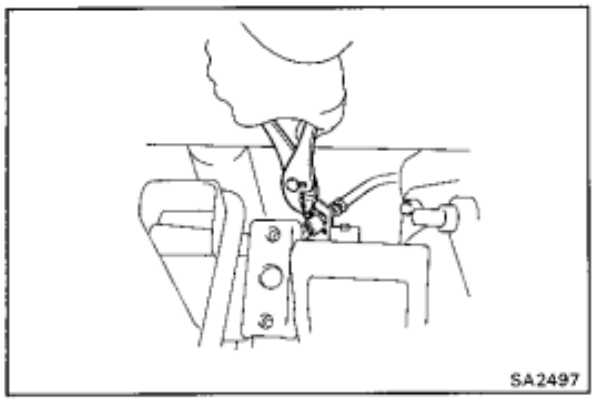
SA2497

(b) Using pliers, install the clip.

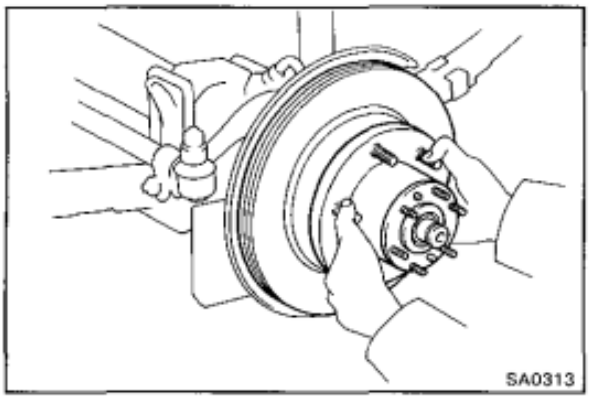

13. **INSTALL AXLE HUB (See page SA-34)**

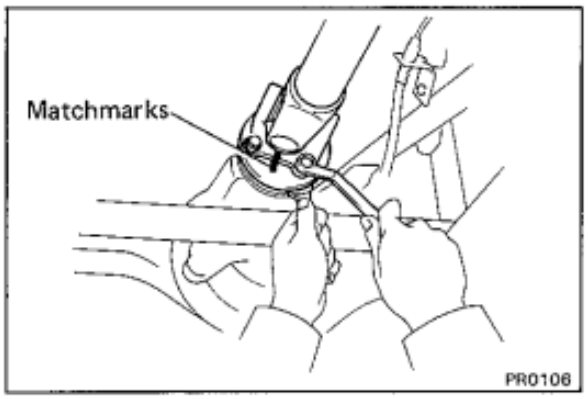

FRONT DIFFERENTIAL

On-Vehicle Replacement of Rear Oil Seal

1. DISCONNECT FRONT PROPELLER SHAFT

(a) Place matchmarks on the flanges.

(b) Remove the four bolts and nuts.

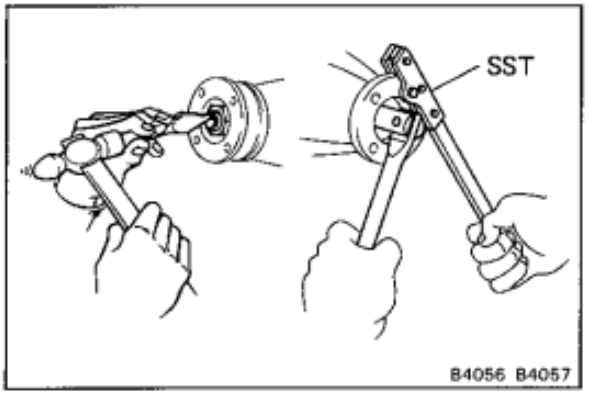

2. REMOVE COMPANION FLANGE

(a) Using a chisel and hammer, loosen the staked part of nut.

(b) Using SST to hold the flange, remove the nut and plate washer.

SST 09330-00021

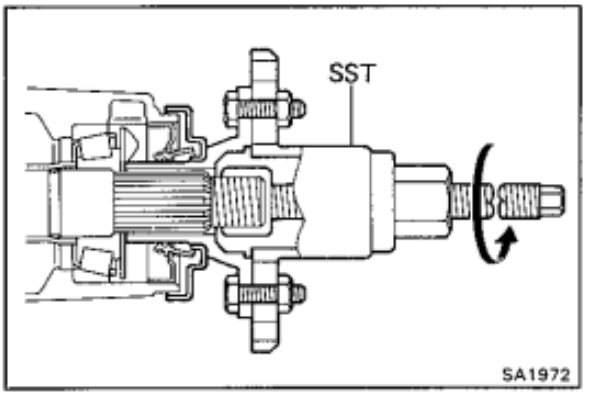

(c) Using SST, remove the companion flange.

SST 09557-22022 (09557-22050)

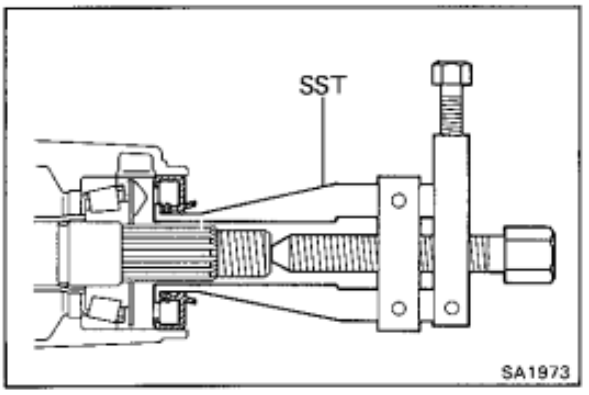

3. REMOVE OIL SEAL AND OIL SLINGER

(a) Using SST, remove the oil seal.

SST 09308-10010

(b) Remove the oil slinger.

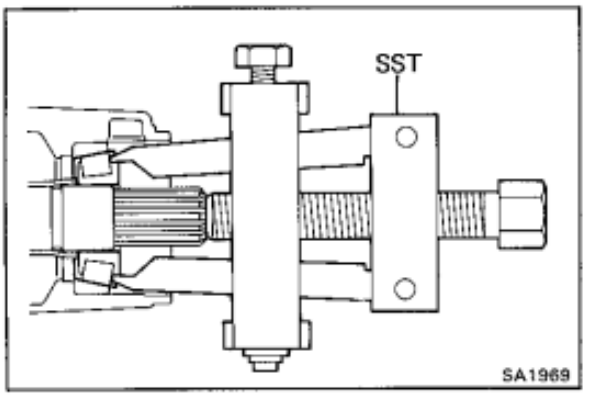

4. REMOVE REAR BEARING

Using SST, remove the rear bearing.

SST 09556-22010

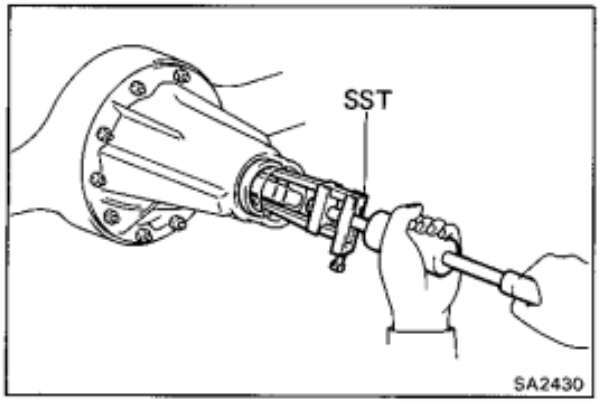

5. **(FJ, PZJ, HZJ)**
REMOVE BEARING OUTER RACE

Using SST, remove the bearing outer race.

SST 09308-00010

NOTICE: Do not scratch the taper surface of the outer race.

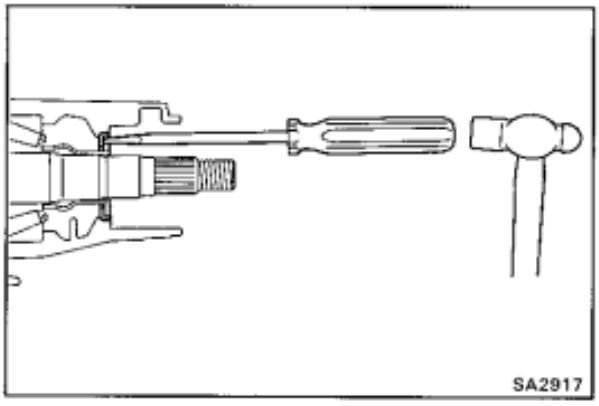

6. **(FJ, PZJ, HZJ)**
REMOVE OIL STORAGE RING

Using a screwdriver, bend the oil storage ring and drive it out.

7. **REMOVE BEARING SPACER**

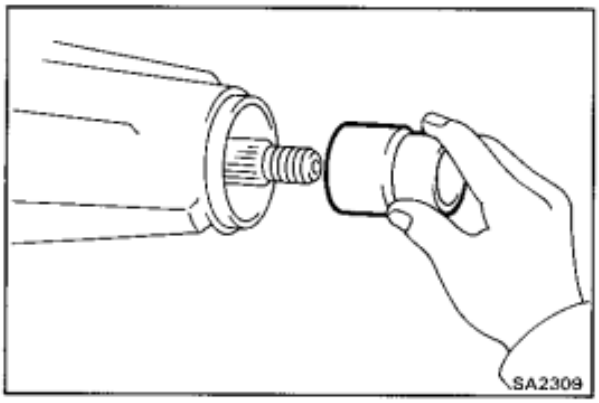

8. **INSTALL NEW BEARING SPACER**

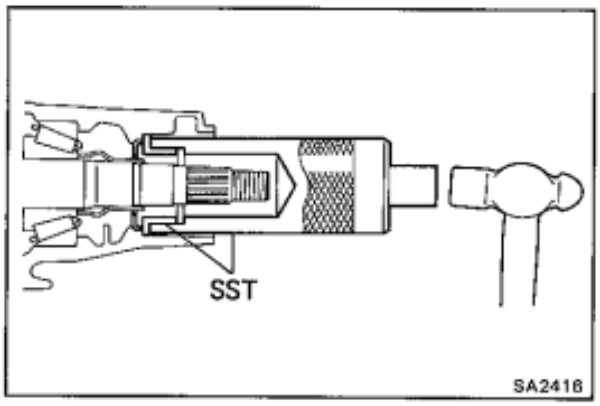

9. **(FJ, PZJ, HZJ)**
INSTALL NEW OIL STORAGE RING

Using SST, drive in a new oil storage ring.

SST 09316-60010 (09316-00010, 09316-00020)

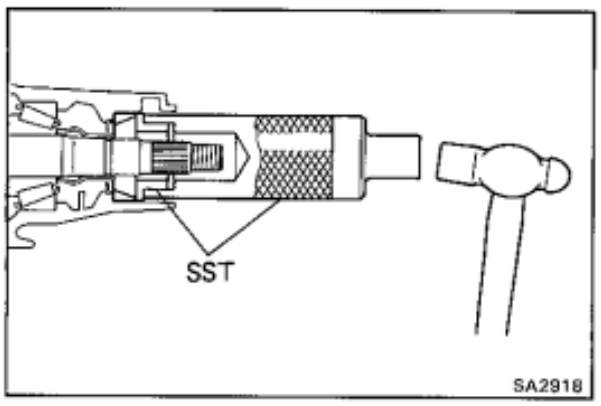

10. **(FJ, PZJ, HZJ)**
INSTALL BEARING OUTER RACE

Using SST, drive in the bearing outer race.

SST 09316-60010 (09316-00010, 09316-00020)

11. **INSTALL REAR BEARING**

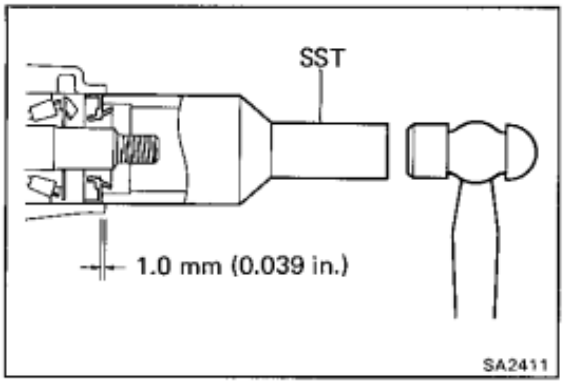

12. INSTALL OIL SLINGER AND NEW OIL SEAL

(a) Install the oil slinger facing as shown.

(b) Using SST, drive in a new oil seal as shown.

SST 09554-30011 (RJ, LJ)
09214-76011 (FJ, PZJ, HZJ)

Oil seal drive in depth: 1.0 mm (0.039 in.)

(c) Coat the lip of the oil seal with MP grease.

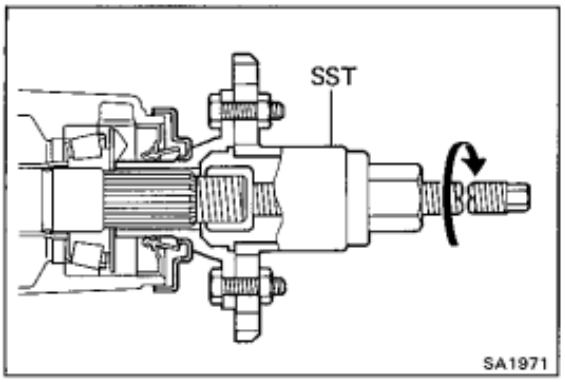

13. INSTALL COMPANION FLANGE

(a) Using SST, install the companion flange on the drive pinion.

SST 09557-22022 (09557-22050)

(b) Place the plate washer on the companion flange.

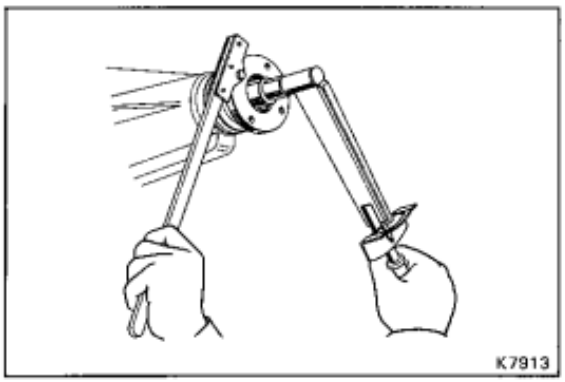

(c) Apply a light coat of gear oil on the threads of a new companion flange nut.

(d) Using SST to hold the flange, torque the nut.

SST 09330-00021

Torque: 2,000 kg-cm (145 ft-lb, 196 N·m)

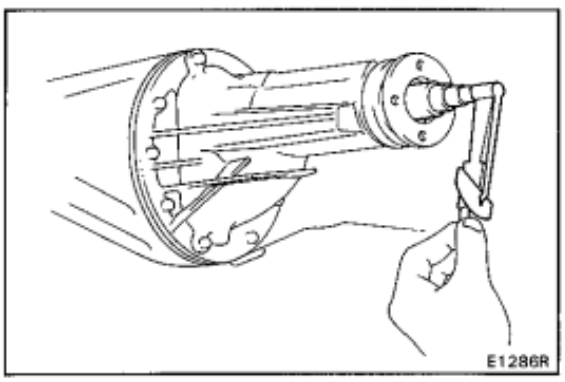

14. CHECK DRIVE PINION PRELOAD

Using a torque meter, measure the preload of the backlash between the drive pinion and ring gear.

Preload (at starting):

Models	New bearing	Reused bearing
RJ, LJ	19 — 26 kg-cm (16.5 — 22.6 in.-lb 1.9 — 2.5 N·m)	9 — 13 kg-cm (7.8 — 11.3 in.-lb 0.9 — 1.3 N·m)
FJ, PZJ, HZJ	10 — 16 kg-cm (8.7 — 13.9 in.-lb 0.9 — 1.6 N·m)	5 — 8 kg-cm (4.3 — 6.9 in.-lb 0.5 — 0.8 N·m)

- If the preload is greater than specification, replace the bearing spacer.
- If the preload is less than specification, retighten the nut 130 kg-cm (9 ft-lb, 13 N·m) a little at a time until the specified preload is reached.

If the maximum torque is exceeded while retightening the nut, replace the bearing spacer and repeat the preload procedure. Do not back off the pinion nut to reduce the preload.

Maximum torque: 3,500 kg-cm (253 ft-lb, 343 N·m)

If everything is normal, coat the threads with gear oil, then repeat the above operation.

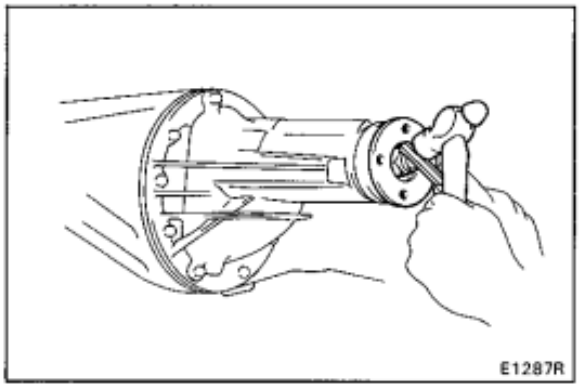

15. STAKE DRIVE PINION NUT

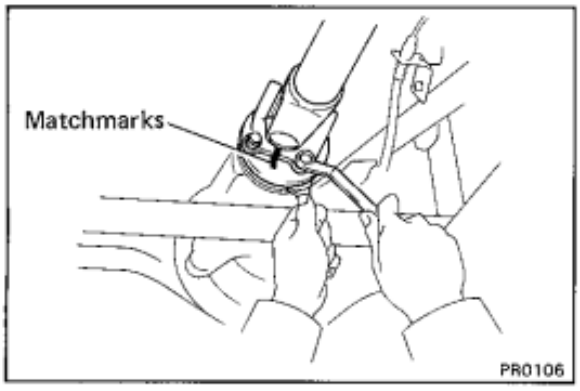

16. CONNECT FRONT PROPELLER SHAFT

(a) Align the matchmarks on the flanges and connect the flanges with four bolts, spring washers and nuts.

(b) Torque the bolts and nuts.

Torque: 750 kg-cm (54 ft-lb, 74 N·m)

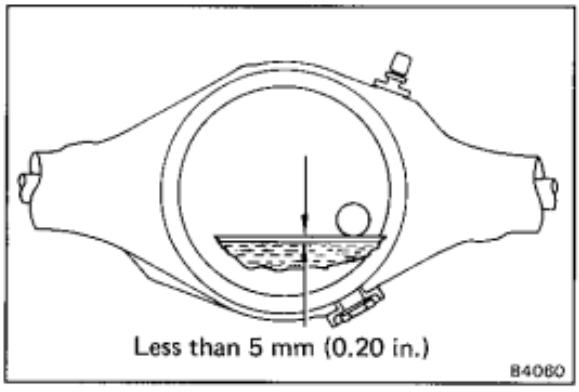

17. CHECK DIFFERENTIAL OIL LEVEL

Fill with hypoid gear oil if necessary.

Oil type: Hypoid gear oil API GL-5

Recommended oil viscosity:

Above −18°C (0°F) SAE 90
Below −18°C (0°F) SAE 80W or 80W-90

Capacity:

RJ, LJ
1.9 liters (2.1 US qts, 1.7 Imp.qts)

FJ, PZJ, HZJ
2.6 liters (2.7 US qts, 2.3 Imp.qts)

Removal and Installation of Front Differential

COMPONENTS

RJ, LJ

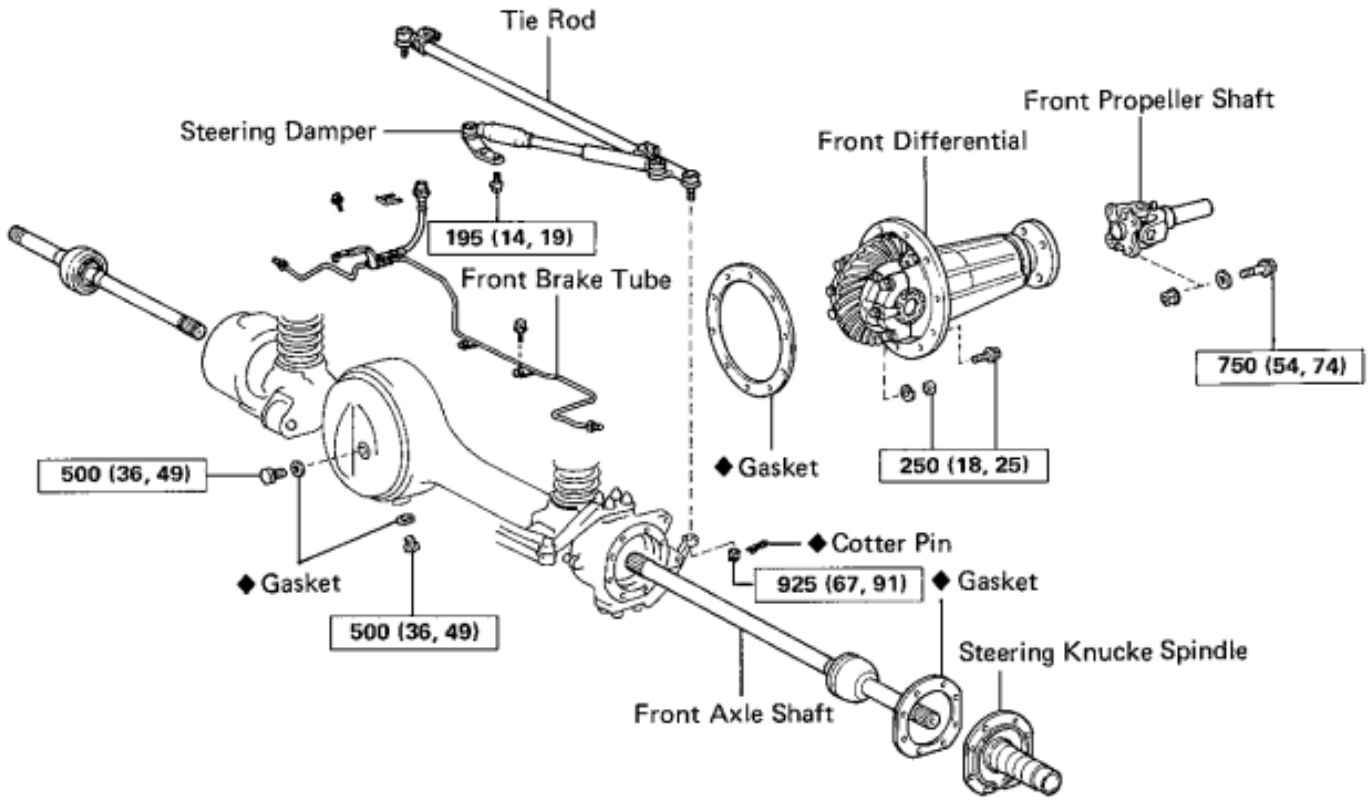

FJ, PZJ, HZJ

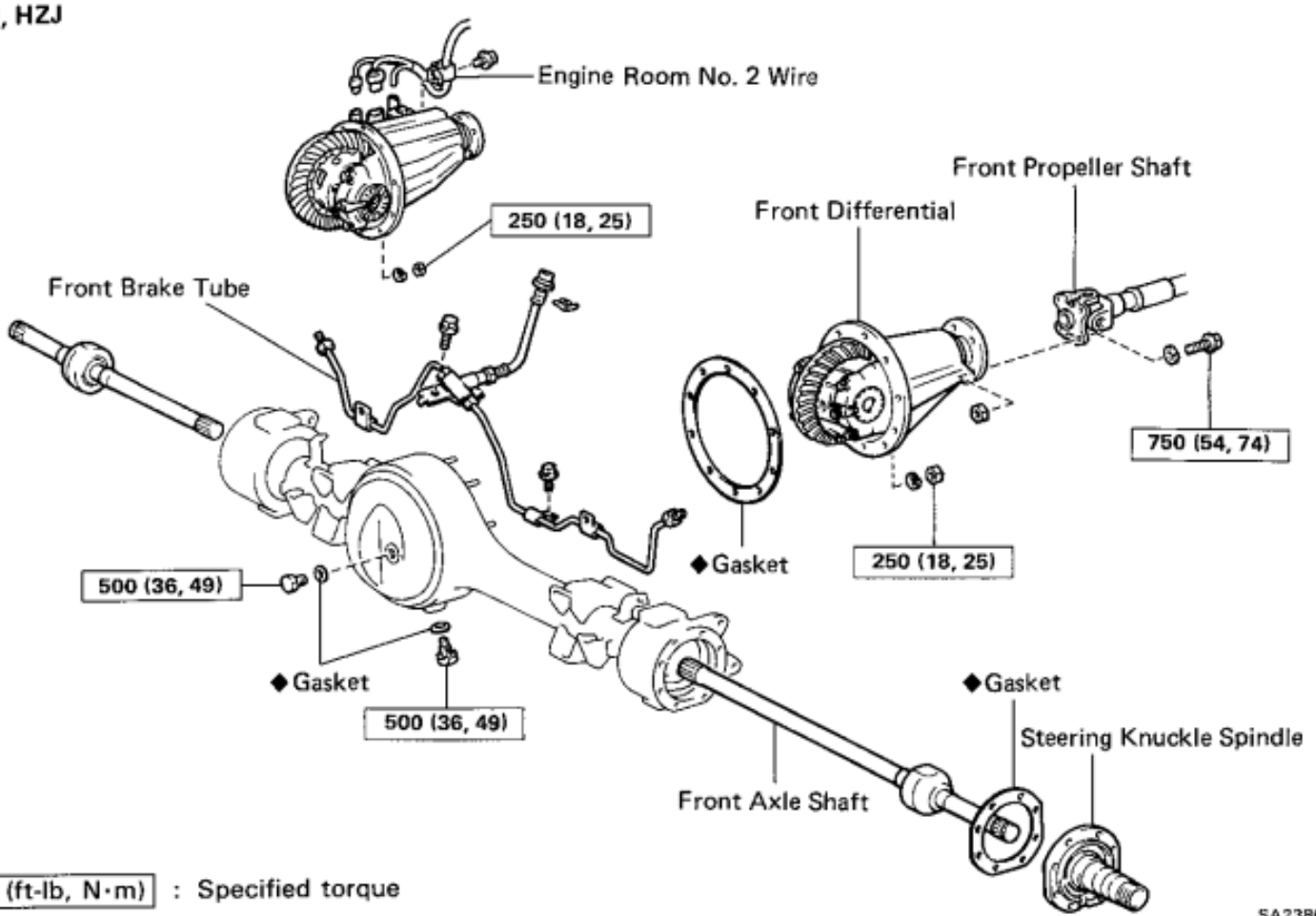

kg-cm (ft-lb, N·m) : Specified torque

◆ Non-reusable part

SA2386
SA2874

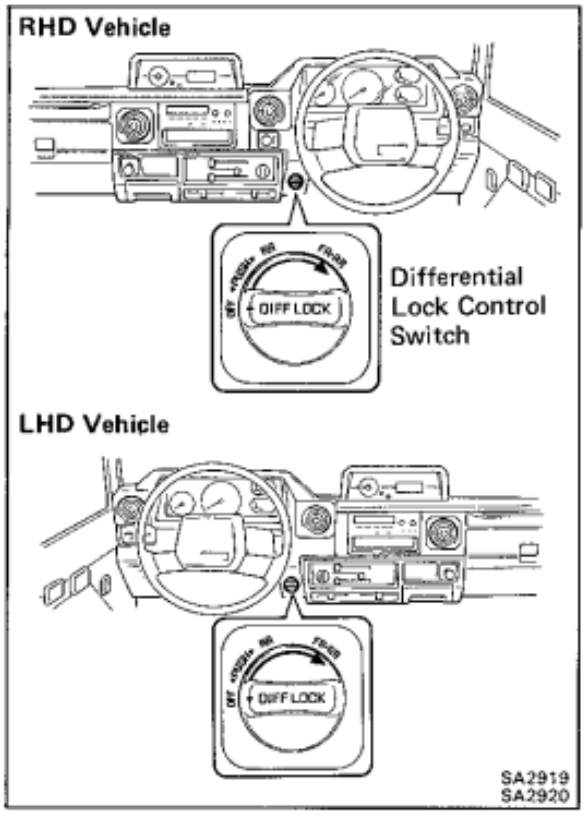

REMOVAL OF FRONT DIFFERENTIAL

(See page SA-54)

1. **(w/ DIFFERENTIAL LOCK)**
   SHIFTING FRONT DIFFERENTIAL LOCK
   (a) Turn the ignition switch to ON position.
   (b) Put on the 4WD switch.
   (c) Turn the differential lock control switch to FR·RR position, and lock the front differential.

   HINT: Turning round the tires, check the tires, check they are the differential lock condition.

   (d) Disconnect the cable from the negative terminal of the battery.

2. **REMOVE DRAIN PLUG AND DRAIN DIFFERENTIAL OIL**

3. **REMOVE FRONT AXLE SHAFTS**
   (See steps 1 to 6 on pages SA-39, 40)

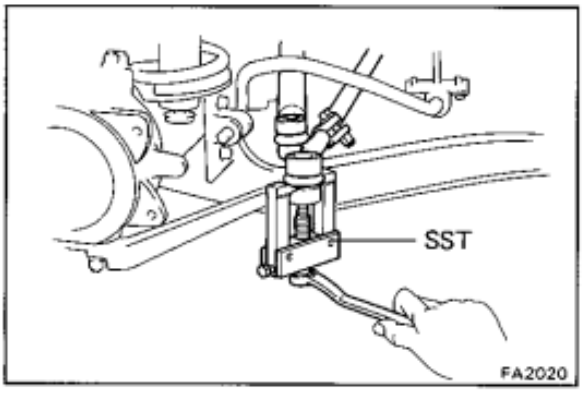

4. **(RJ, LJ)**
   REMOVE TIE ROD AND STEERING DAMPER
   (a) Using SST, disconnect the tie rod from the knucle arm.

   SST 09611-22012

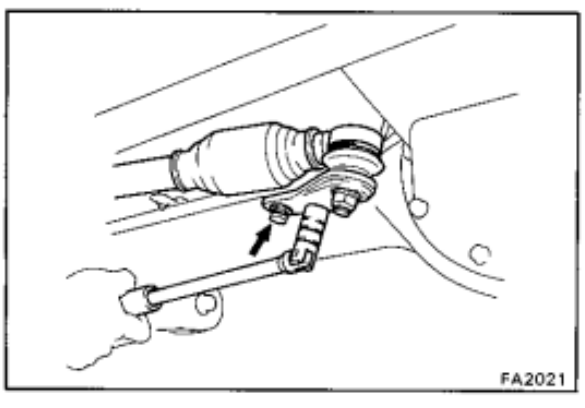

   (b) Remove the two bolts and steering damper.

5. **DISCONNECT FRONT PROPELLER SHAFT**
   (See step 1 on page SA-50)

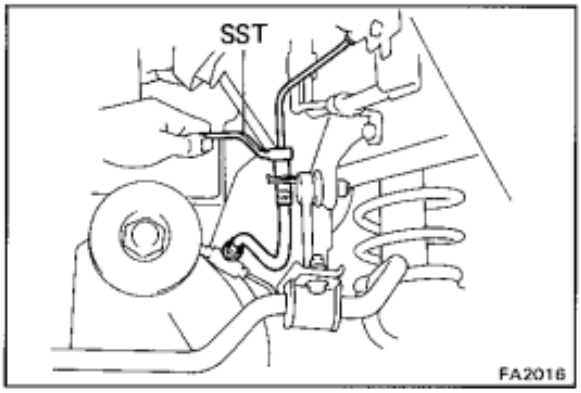

6. REMOVE FRONT BRAKE TUBE

(a) Using SST, disconnect the brake tube at the frame side and remove the clip.

SST 09751-36011

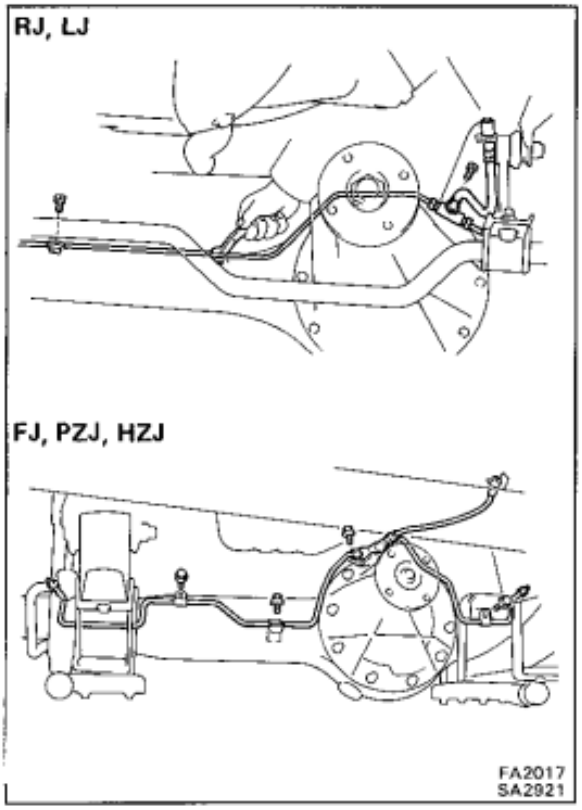

(b) Remove the clamp bolts, and remove the three-way with the brake hose and tube.

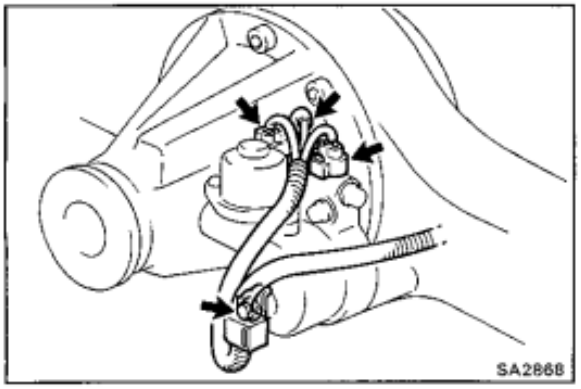

7. (w/ DIFFERENTIAL LOCK) DISCONNECT ENGINE ROOM NO.2 WIRE

8. REMOVE DIFFERENTIAL CARRIER ASSEMBLY

NOTICE: Do not scratch the installation surface.

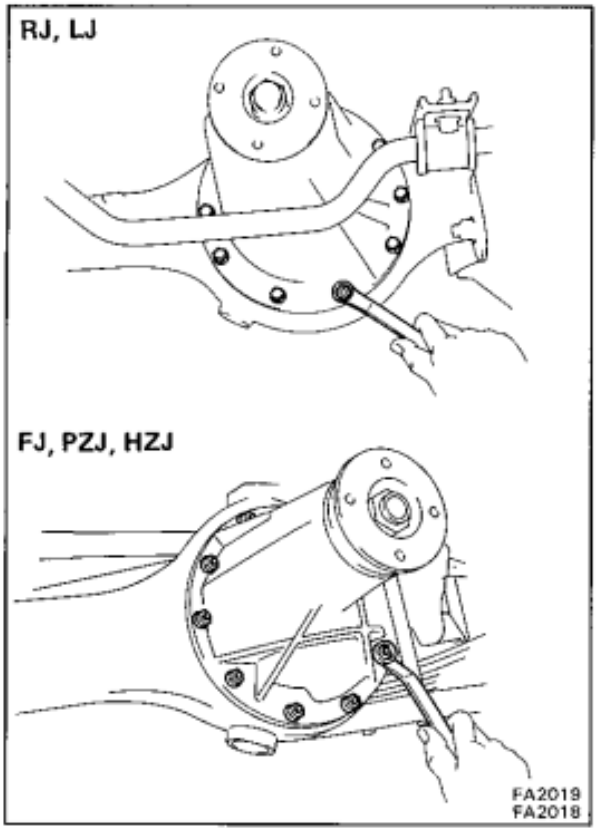

INSTALLATION OF FRONT DIFFERENTIAL

(See page SA-54)

1. **(w/ DIFFERENTIAL LOCK)**
   CHECK DIFFENTIAL LOCK OPERATION
   (a) Connect the connector of the actuator to the connector of the vehicle side, and check that the sleeve is on work with switching over the differential lock control switch.
   (b) After checking the differential, keep it in a lock state.

2. **INSTALL A NEW GASKET**

3. **INSTALL DIFFERENTIAL CARRIER ASSEMBLY**
   Install the differential carrier assembly in the axle and install the two nuts and eight bolts (RJ, LJ) or two nuts and ten nuts (FJ, PZJ, HZJ). Torque the nuts and bolts.
   Torque: 280 kg-cm (20 ft-lb, 27 N·m)

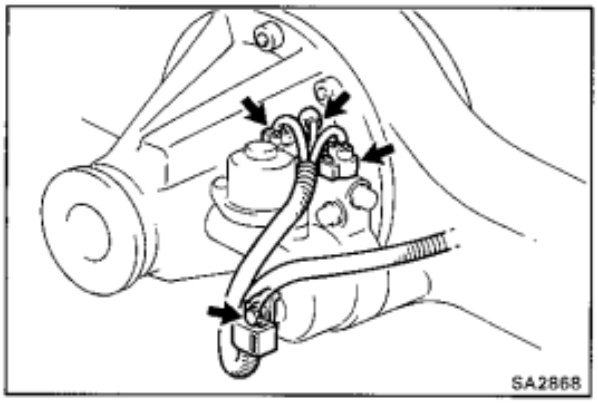

4. **(w/ DIFFERENTIAL LOCK)**
   CONNECT ENGINE ROOM NO.2 WIRE
   HINT:
   - When connecting the bleeder tube of the harness side to the hose of the actuator side, its depth of insertion is approx. 15 mm (0.59 in.).
   - Take care that water or the equivalant shall not adhere to the connectors and hose.

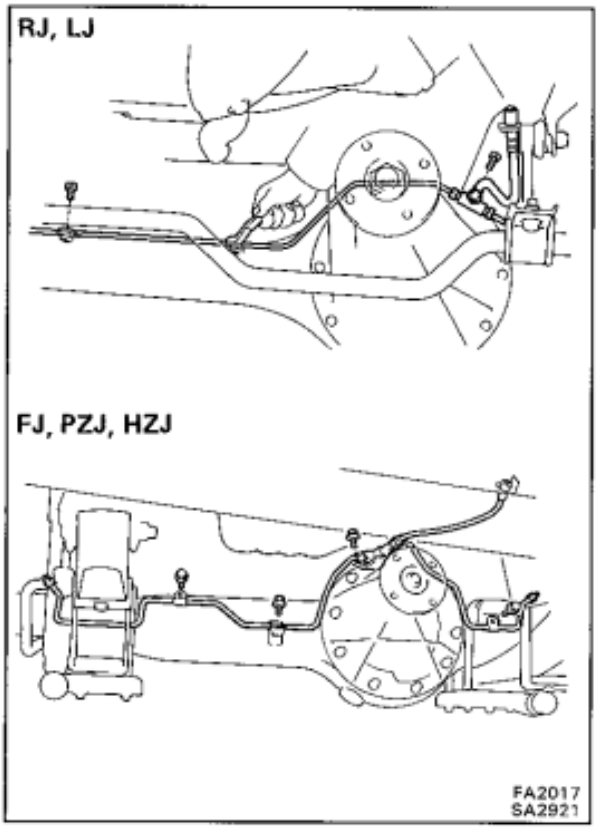

5. **INSTALL FRONT BRAKE TUBE**
   (a) Install the three-way with the brake hose and tubes to the axle housing.

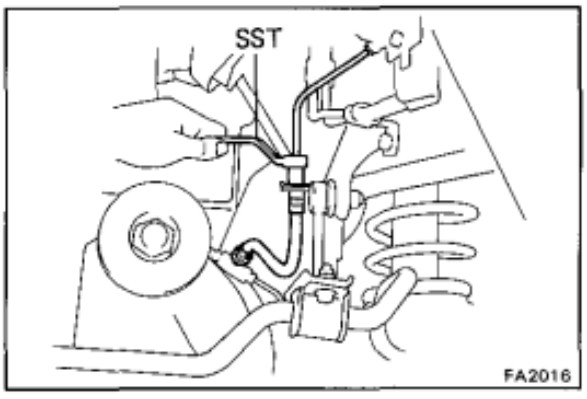

(b) Using SST, connect the brake tube at the frame side, and install the clip.

SST 09751-36011

6. **CONNECT FRONT PROPELLER SHAFT**
(See step 16 on page SA-53)

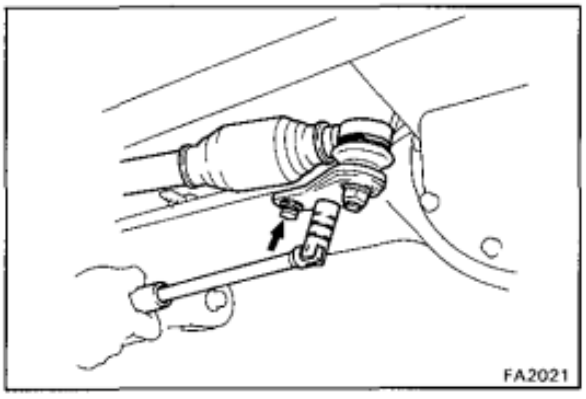

7. **(RJ, LJ)**
INSTALL TIE ROD AND STEERING DAMPER

(a) Install the steering damper with the two bolts.

Torque: 195 kg-cm (14 ft-lb, 19 N·m)

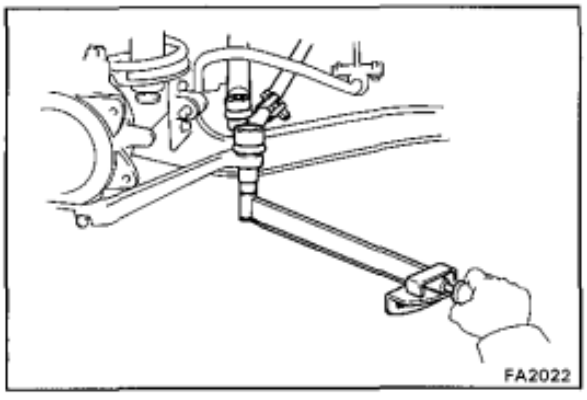

(b) Torque the castle nut and secure it with a new cotter pin.

Torque: 925 kg-cm (67 ft-lb, 91 N·m)

8. **INSTALL FRONT AXLE SHAFTS**
(See steps 1 to 13 on pages SA-45 to 49)

9. **INSTALL DRAIN PLUG**

10. **FILL DIFFERENTIAL WITH GEAR OIL**

Fill with hypoid gear oil.

Oil type: Hypoid gear oil API GL-5

Recommended oil viscosity:

Above −18°C (0°F)	**SAE 90**
Below −18°C (0°F)	**SAE 80W or 80W-90**

Capacity:

RJ, LJ
1.9 liters (2.1 US qts, 1.7 Imp.qts)

FJ, PZJ, HZJ
2.6 liters (2.7 US qts, 2.3 Imp.qts)

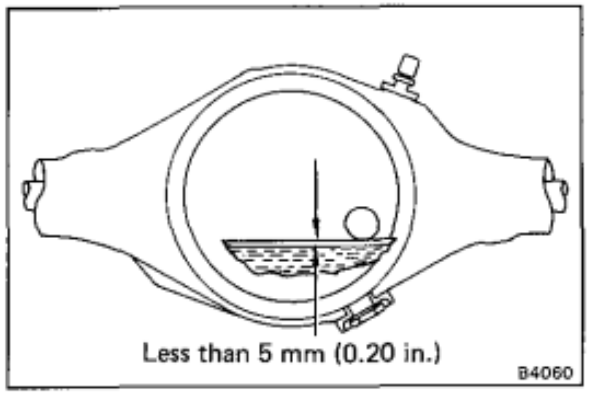

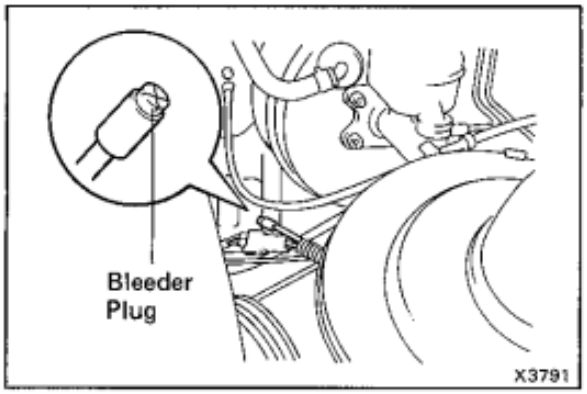

11. (w/ DIFFERENTIAL LOCK) CHECK DIFFERENTIAL LOCK OPERATION
(See page SA-182)

12. (w/ DIFFERENTIAL LOCK) CHECK BLEEDER PLUG

Check that the bleeder plug at the tip of the bleeder tube (inside of the engine room) is not damaged of worn.

Differential Carrier

COMPONENTS

2 Pinion Type

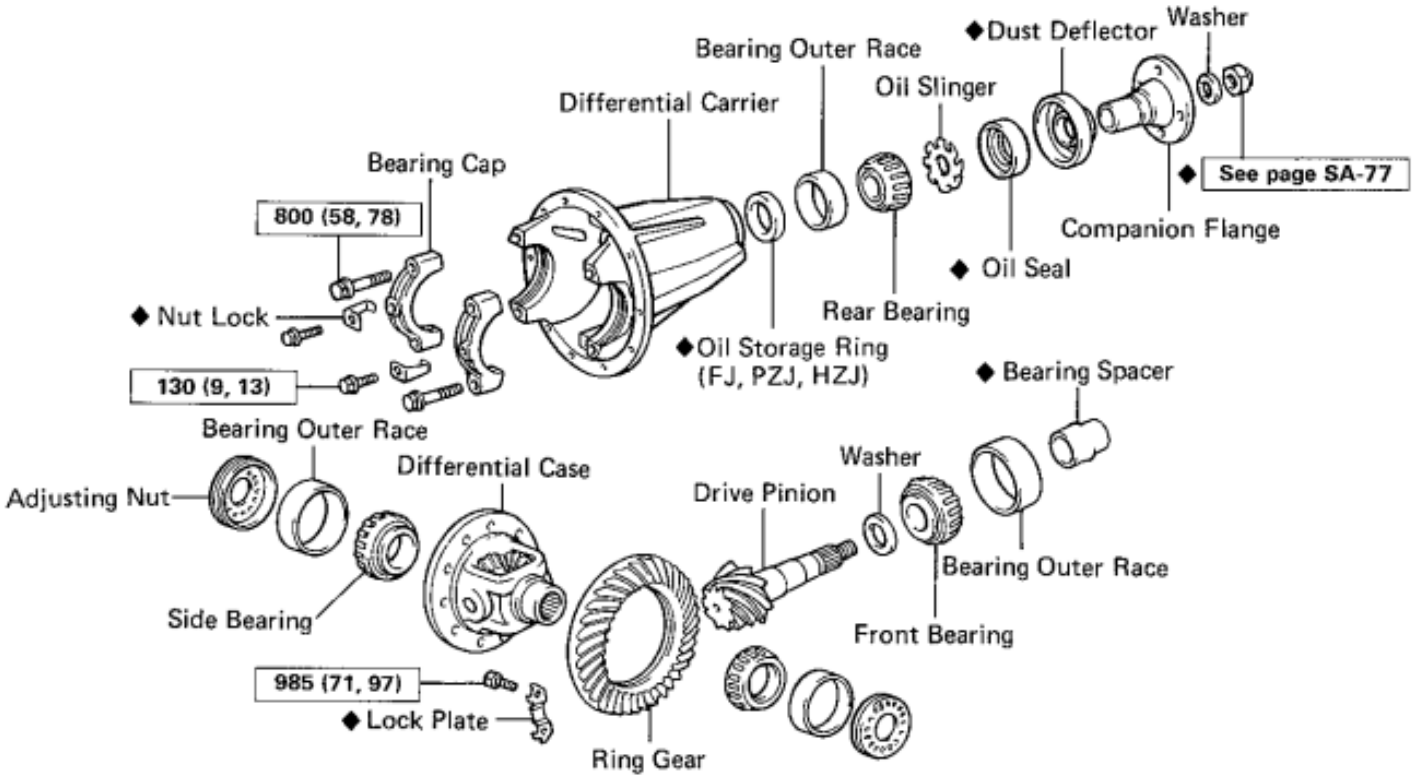

w/ Differential Lock (4 Pinion Type)

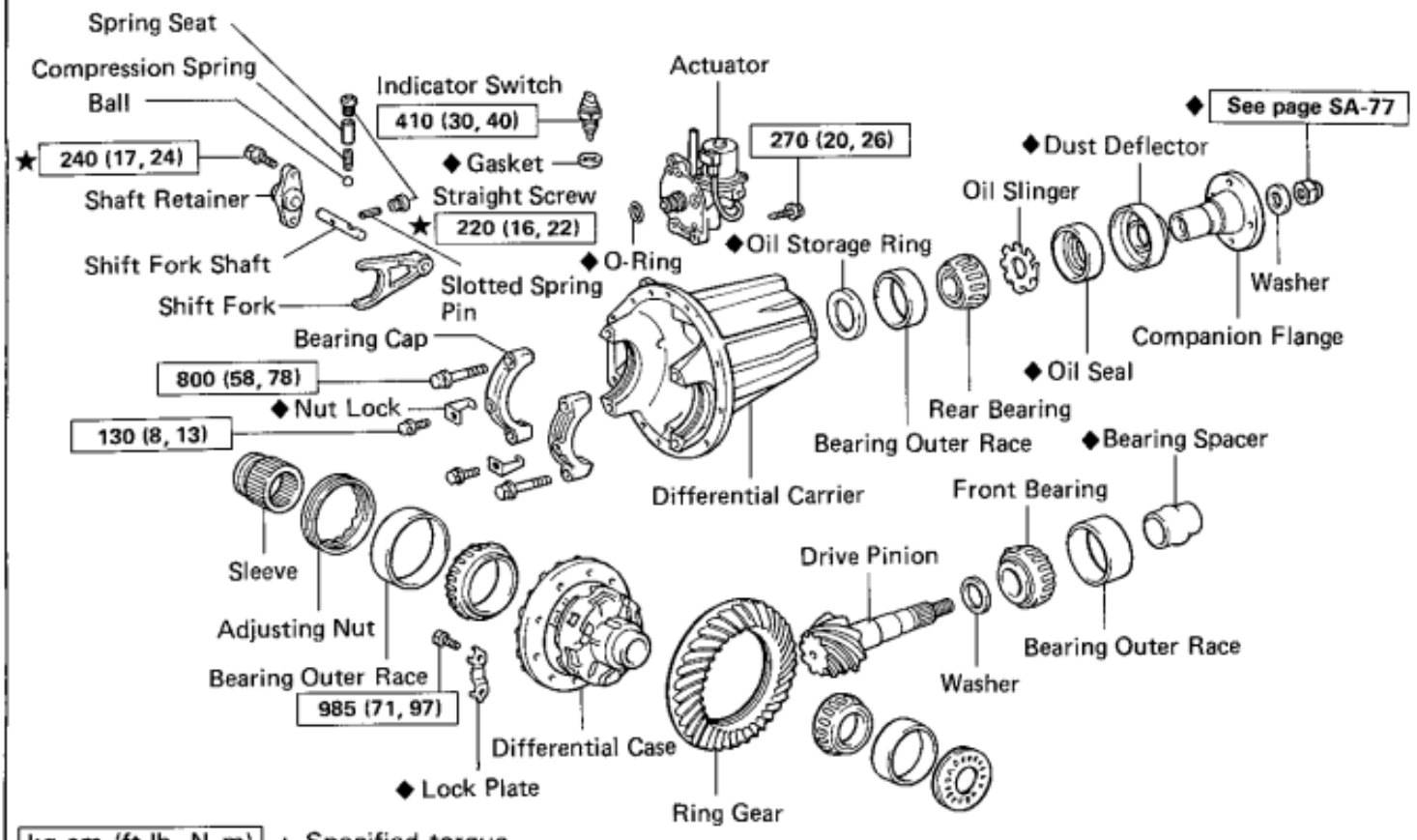

kg-cm (ft-lb, N·m) : Specified torque

◆ Non-reusable part

★ Precoated part

SA2579
SA2616

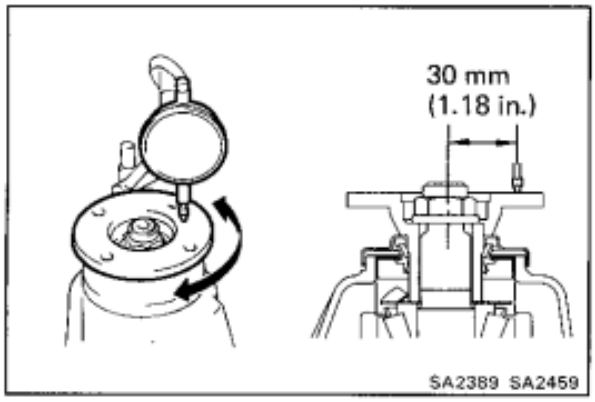

INSPECTION OF DIFFERENTIAL CARRIER

1. CHECK RUNOUT OF COMPANION FLANGE

Using a dial indicator, measure the vertical and lateral runout of the companion flange.

Maximum vertical runout: 0.10 mm (0.0039 in.)

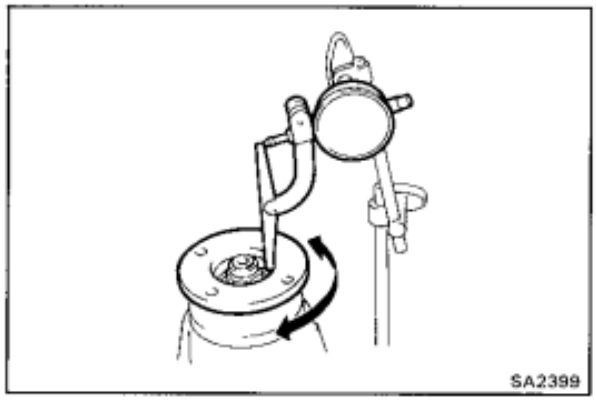

Maximum lateral runout: 0.10 mm (0.0039 in.)

If the runout is greater than the maximum, replace the companion flange.

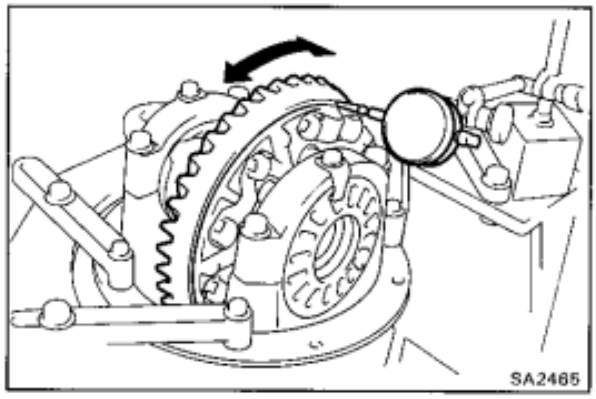

2. CHECK RING GEAR RUNOUT

If the runout is greater than maximum, replace the ring gear.

Maximum runout: 0.10 mm (0.0039 in.)

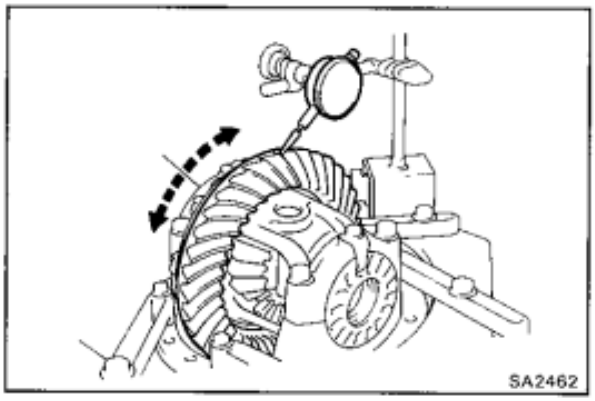

3. CHECK RING GEAR BACKLASH

If the backlash is not within specification, adjust the side bearing preload or repair as necessary.

Backlash: 0.13 — 0.18 mm (0.0051 — 0.0071 in.)

HINT: Perform the measurements at three or more positions around the circumference of the ring gear.

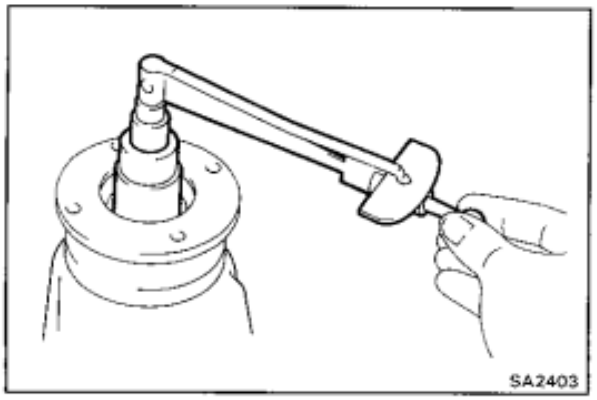

4. MEASURE DRIVE PINION PRELOAD

Measure the drive pinion preload, using the backlash of the drive pinion and ring gear.

Preload (at starting):

RJ, LJ

9 — 13 kg-cm (7.8 — 11.3 in.-lb, 0.9 — 1.3 N·m)

FJ, PZJ, HZJ

5 — 8 kg-cm (4.3 — 6.9 in.-lb, 0.5 — 0.8 N·m)

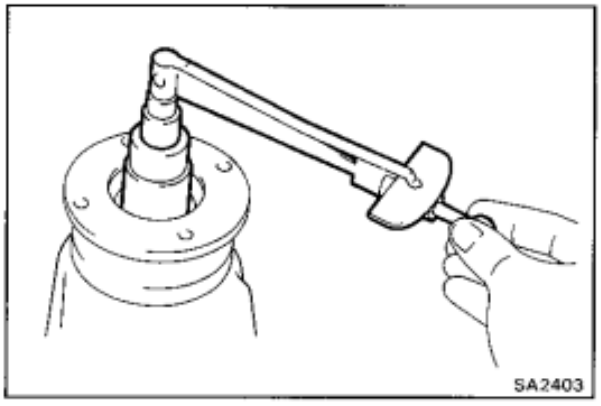

5. **CHECK TOTAL PRELOAD**

Using a torque meter, measure the total preload.

Total preload: In addition to drive pinion preload
4 — 6 kg-cm (3.5 — 5.2 in.-lb, 0.4 — 0.6 N·m)

If necessary, disassemble and inspect a differential.

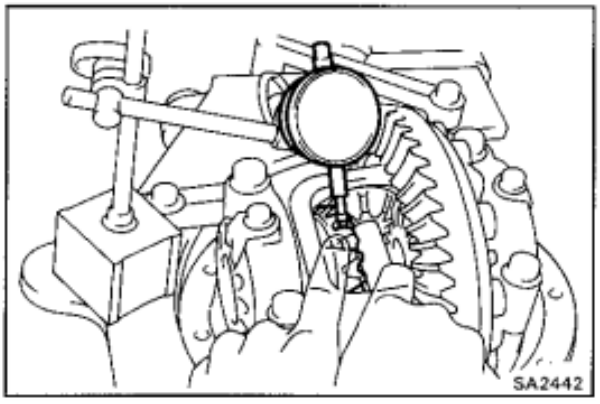

6. **(2 PINION TYPE)**
CHECK SIDE GEAR BACKLASH

Measure the side gear backlash while holding one pinion gear toward the case.

Standard backlash: 0.05 — 0.20 mm
(0.0020 — 0.0079 in.)

If the backlash is out of specification, install the correct thrust washers. (See page SA-85)

7. **INSPECT TEETH CONTACT BETWEEN RING GEAR AND DRIVE PINION**
(See step 11 on page SA-75)

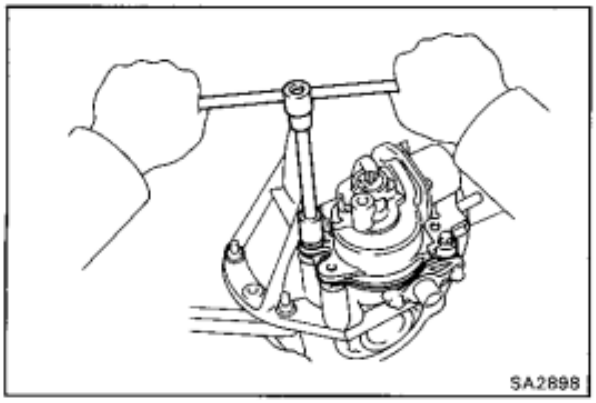

DISASSEMBLY OF DIFFERENTIAL CARRIER

(See page SA-60)

1. **(w/ DIFFERENTIAL LOCK)**
   REMOVE ACTUATOR
   (a) Remove the bolt and actuator from the differential carrier.
   (b) Remove the O-ring.

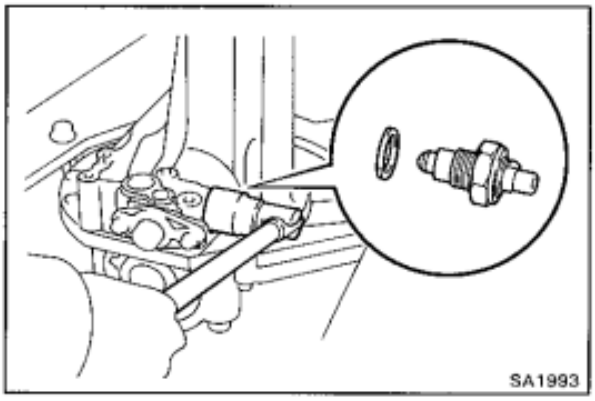

2. **(w/ DIFFERENTIAL LOCK)**
   REMOVE INDICATOR SWITCH

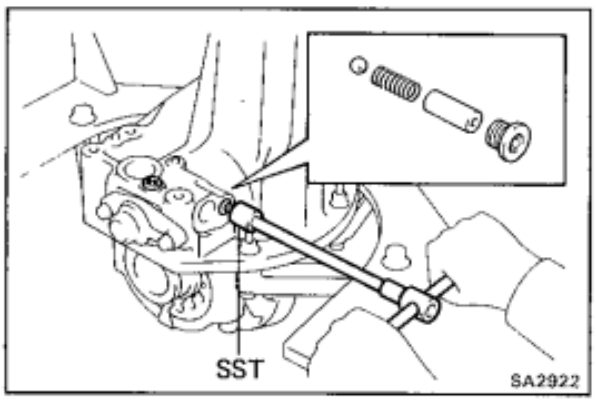

3. **(w/ DIFFERENTIAL LOCK)**
   REMOVE SHIFT FORK SHAFT
   (a) Using SST, remove the two straight screw plugs.

   SST 09313-30021

   (b) Remove the spring seat, compression spring and ball.

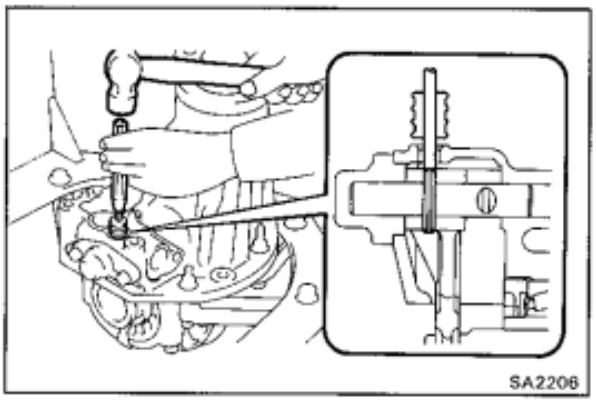

   (c) Using a pin punch and hammer, drive out the slotted spring pin.

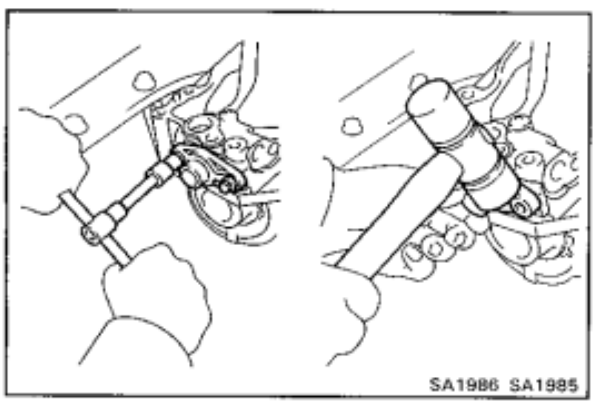

   (d) Remove the two bolts from the shaft retainer.
   (e) Using a plastic hammer, tap out the shaft retainer.

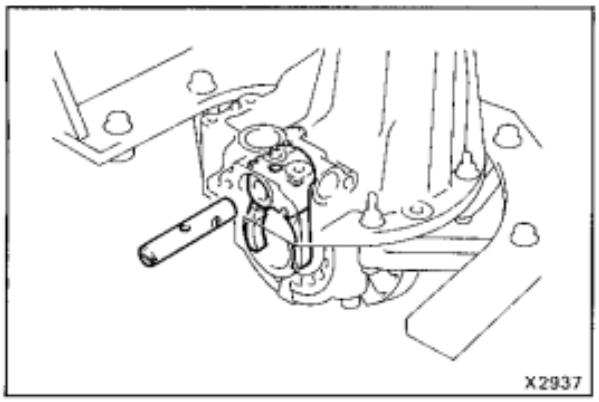

(e) Remove the shift fork shaft.

HINT: Pull out the shift fork shaft with the screwdriver turned round.

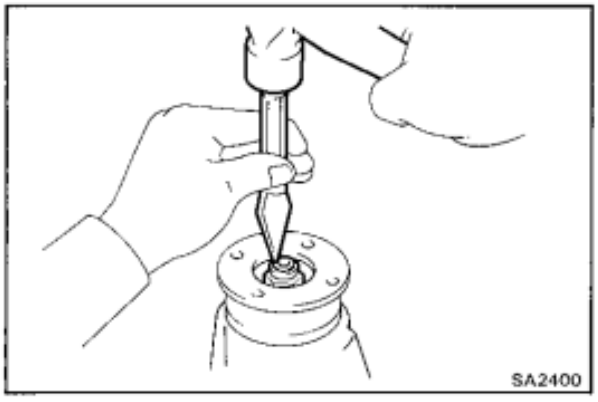

4. REMOVE COMPANION FLANGE

(a) Using a hammer and chisel, loosen the staked part of the nut.

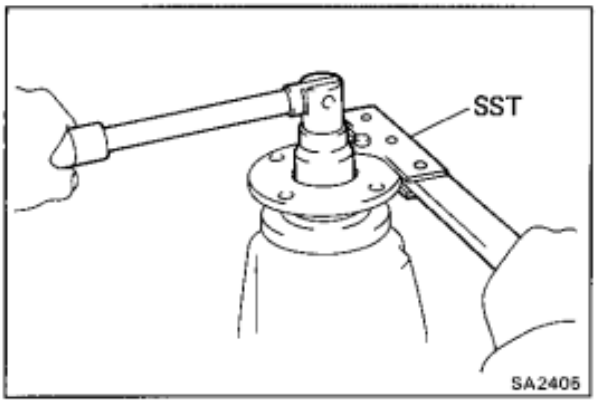

(b) Using SST to hold the flange, remove the nut and plate washer.

SST 09330-00021

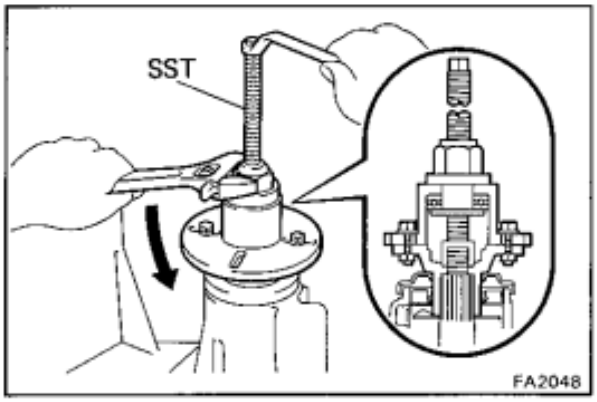

(c) Using SST, remove the companion flange.

SST 09557-22022 (09557-22050)

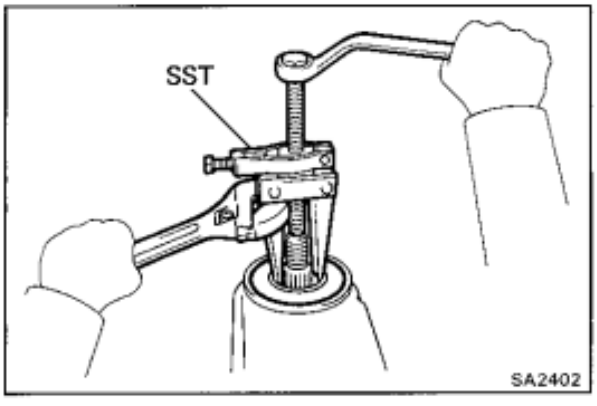

5. REMOVE REAR OIL SEAL AND OIL SLINGER

(a) Using SST, remove the oil seal from the housing.

SST 09308-10010

(b) Remove the oil slinger.

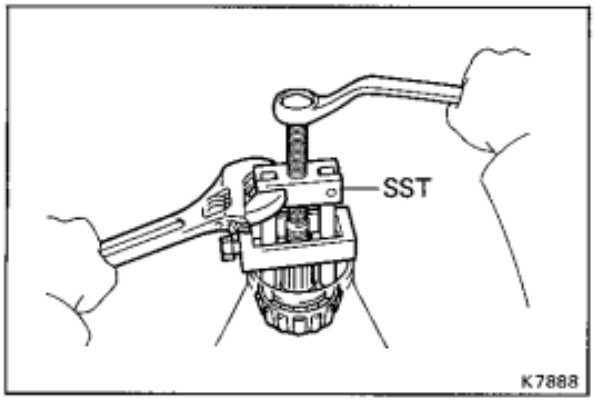

6.-1 (RJ, LJ)
REMOVE REAR BEARING AND BEARING SPACER

(a) Using SST, remove the bearing from the housing.

SST 09556-22010

(b) Remove the bearing spacer.

6.-2 (FJ, PZJ, HZJ)
REMOVE REAR BEARING

Using SST, remove the bearing from the housing.

SST 09556-22010

7. REMOVE DIFFERENTIAL CASE

(a) (2 pinion type only)
Place matchmarks on the bearing cap and differential carrier.

(b) Remove the two adjusting nut locks.

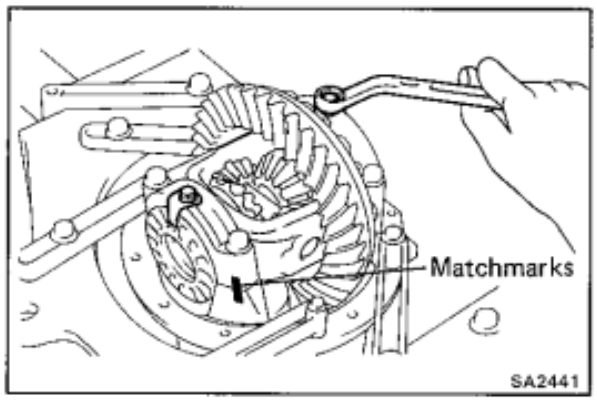

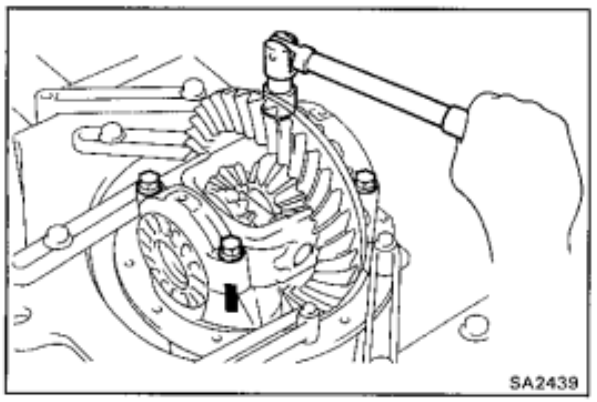

(c) Remove the four bolts and the two bearing caps.

(d) (2 pinion type only)
Remove the two adjusting nuts.

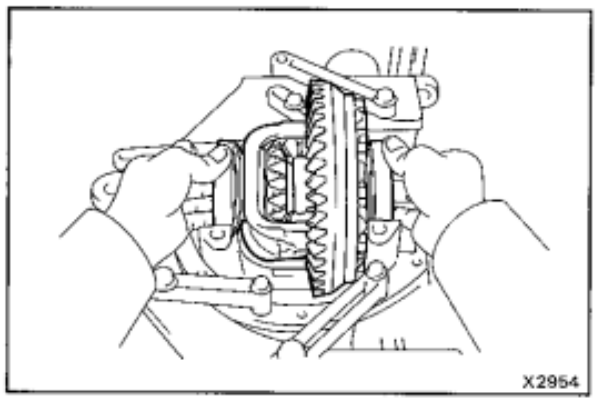

(e) (2 pinion type only)
Remove the differential case with the side bearing outer races from the differential carrier.

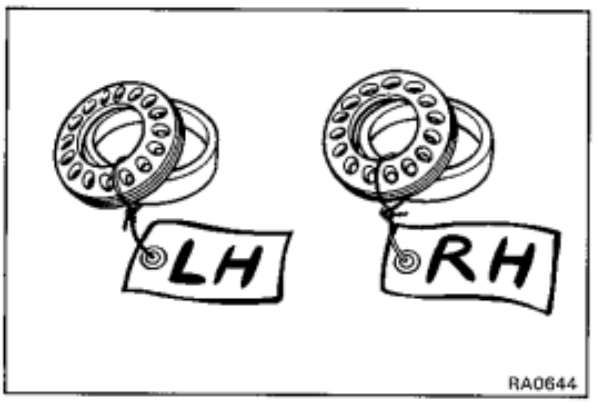

HINT: Tag the disassembled parts to show the location for reassembly.

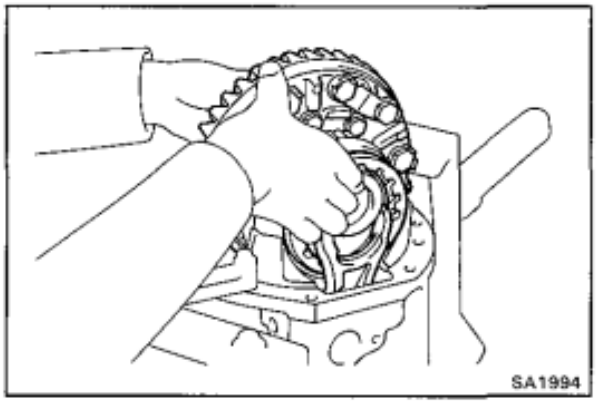

(f) (w/ Differential lock only)
Remove the differential case with both side bearing outer races, adjusting nuts and sleeve from the differential carrier.

(g) (w/ Differential lock only)
Remove the shift fork.

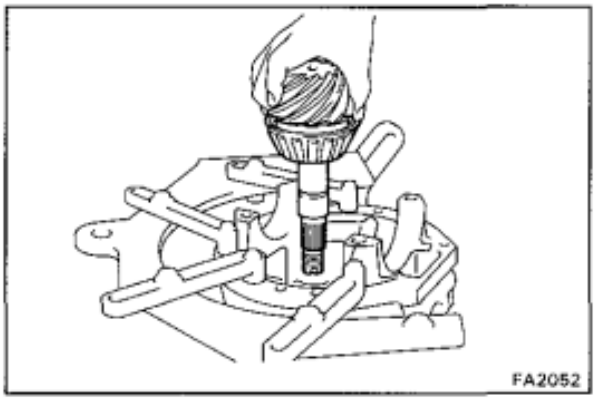

8.-1 (RJ, LJ)
REMOVE DRIVE PINION

Remove the drive pinion with the front bearing.

8.-2 (FJ, PZJ, HZJ)
REMOVE DRIVE PINION AND BEARING SPACER

(a) Remove the drive pinion with the front bearing.

(b) Remove the bearing spacer.

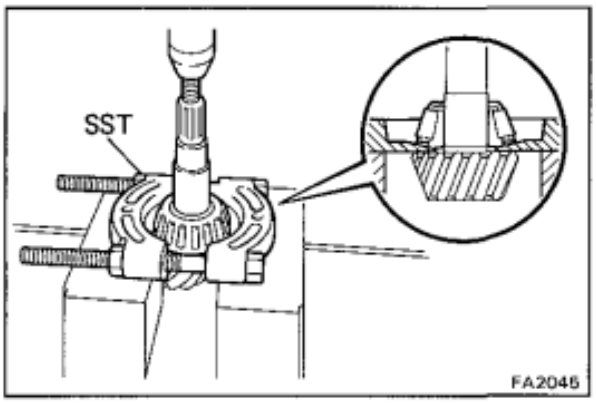

9. REMOVE DRIVE PINION FRONT BEARING

(a) Using SST and a press, remove the bearing from the drive pinion.

SST 09950-00020

HINT: If the drive pinion or ring gear are damaged, replace them as a set.

(b) Remove the washer from the drive pinion.

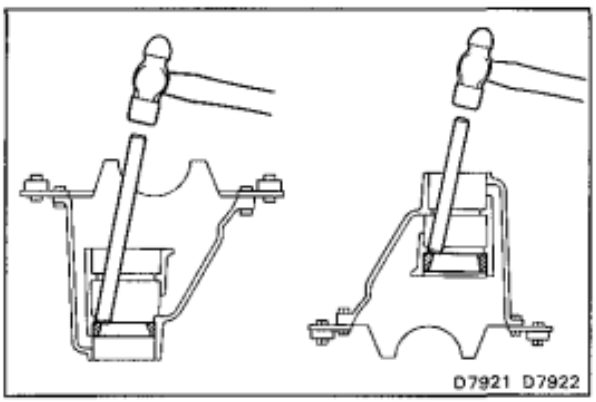

10.-1 (RJ, LJ)
REMOVE FRONT AND REAR BEARING OUTER RACES

Using a hammer and brass bar, drive out the outer race from carrier.

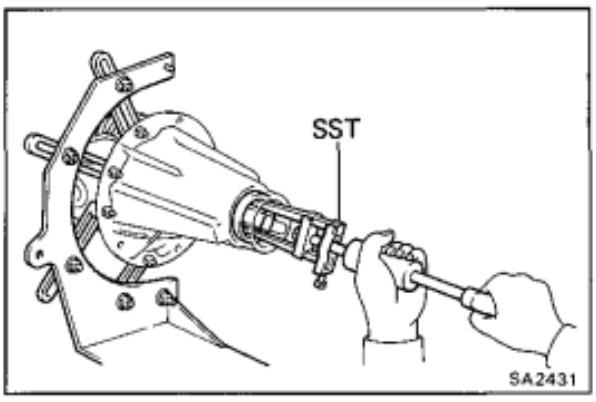

10.-2 (FJ, PZJ, HZJ)
REMOVE FRONT, REAR BEARING OUTER RACES AND OIL STORAGE RING

(a) Using SST, remove the bearing outer race.

SST 09308-00010

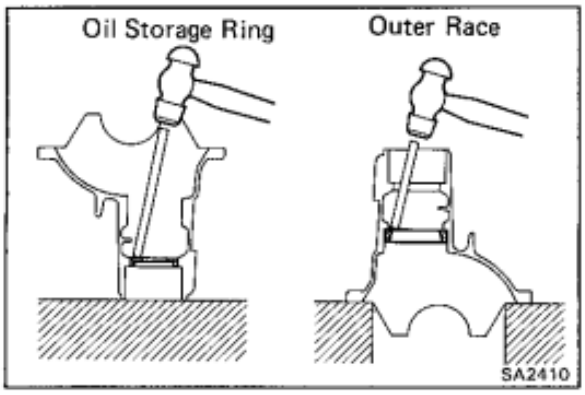

(b) Using a hammer and brass bar, drive out the oil storage ring and outer race from the carrier.

HINT: Do not remove the oil storage ring unless replacing it with a new one.

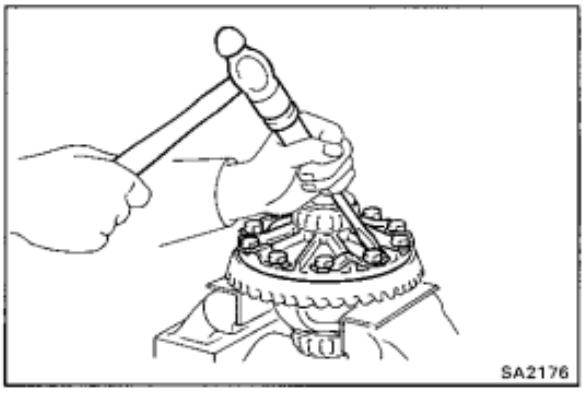

11. REMOVE RING GEAR

(a) Using a screwdriver, unstake the lock plates.

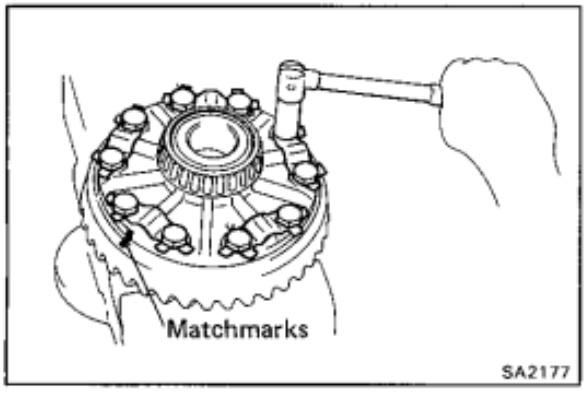

(b) Place matchmarks on the ring gear and differential case.

(c) Remove the ten bolts and five lock plates.

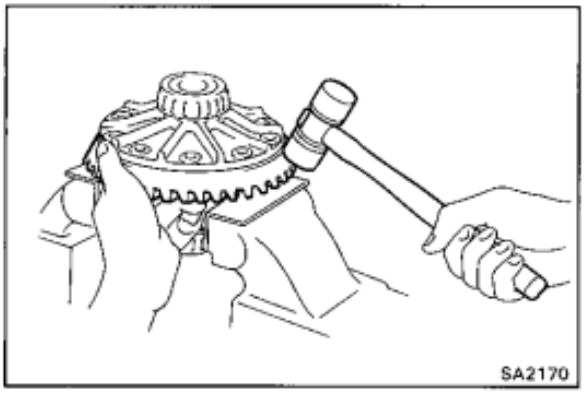

(d) Using a plastic or copper hammer, tap on the ring gear to separate it from the differential case.

12. CHECK DIFFERENTIAL CASE RUNOUT

(a) Place the bearing outer races on their respective bearings. Check that the left and right outer races are not interchanged.

(b) Install the differential case in the differential carrier.

(c) When there is no play left in the side bearings, install the adjusting nuts.

(d) Align matchmarks on the bearing cap and differential carrier.

(e) Install and uniformly tighten the four bearing cap bolts in several passes.

(f) Using a dial indicator, measure the differential case runout.

Maximum runout: 0.07 mm (0.0028 in.)

(g) Remove the differential case.
(See step 7 on page SA-65)

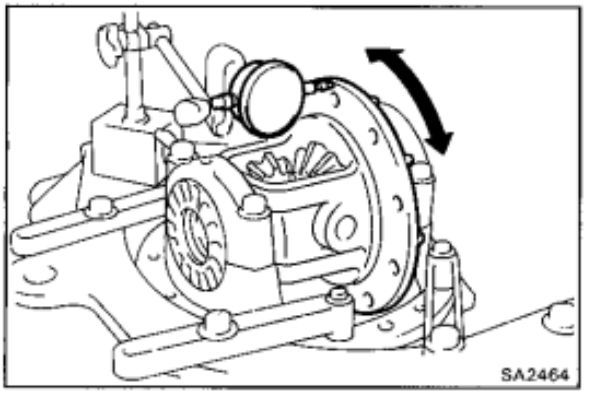

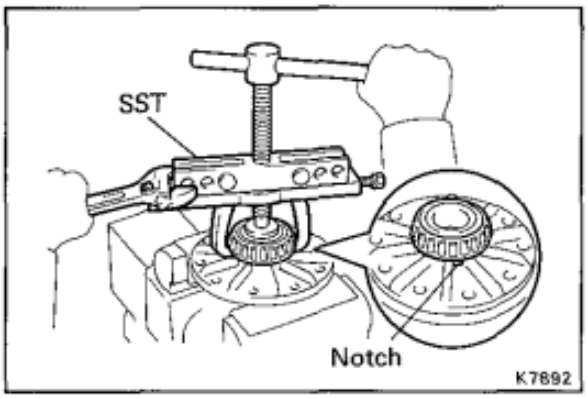

13. REMOVE SIDE BEARINGS

Using SST, remove the side bearing from the differential case.

SST 09950-20017

HINT: Fix the claws of SST to the notch in the differential case.

14. DISASSEMBLE DIFFERENTIAL CASE

2 pinion type: See page SA-82.
w/ Differential lock (4 pinion type)
: See page SA-84.

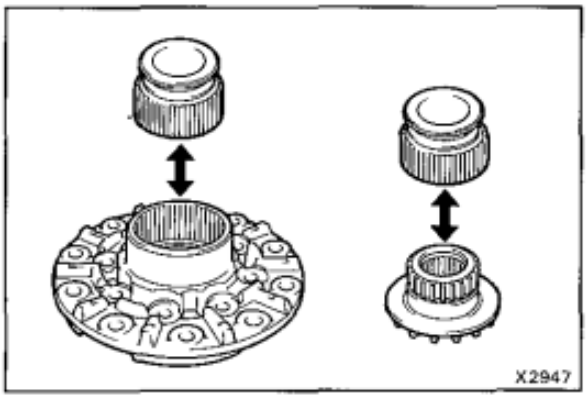

INSPECTION AND REPLACEMENT OF DIFFERENTIAL COMPONENTS

1. (w/ DIFFERENTIAL LOCK) INSPECT SLEEVE

(a) Install the sleeve to the differential case (LH) and check it moves smoothly.

(b) Install the sleeve to the side gear and check it move smoothly.

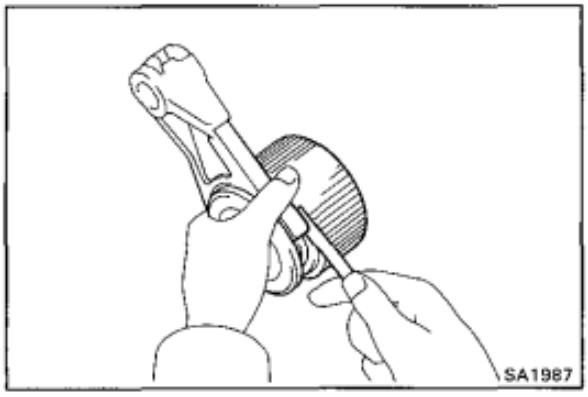

2. (w/ DIFFERENTIAL LOCK) MEASURE CLEARANCE OF SHIFT FORK AND SLEEVE

Using a feeler gauge, measure the clearance between the shift fork and sleeve.

(For reference) Clearance: 0.15 — 0.35 mm (0.006 — 0.014 in.)

If necessary, replace the shift fork or sleeve.

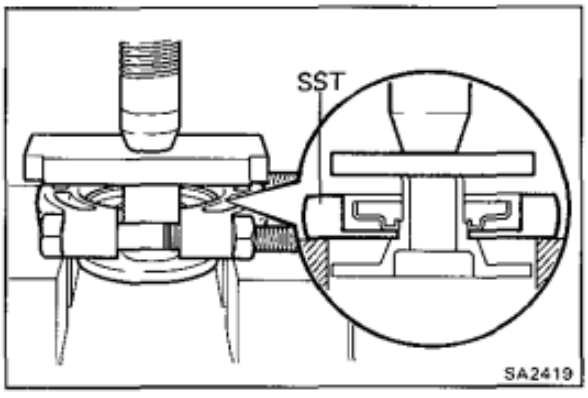

3. REPLACE COMPANION FLANGE DUST DEFLECTOR

(a) Using SST and a press, remove the dust deflector.

SST 09550-00020

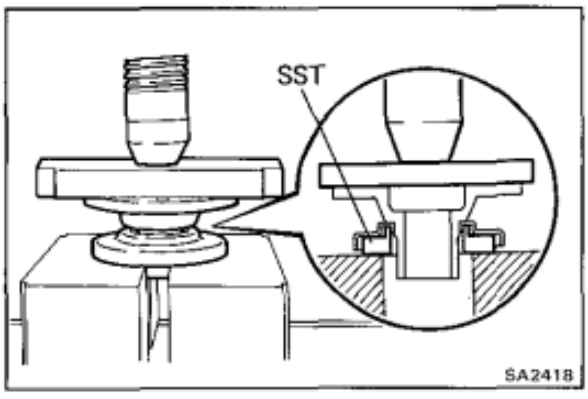

(b) Using SST and a press, install a new dust deflector .

SST 09726-40010

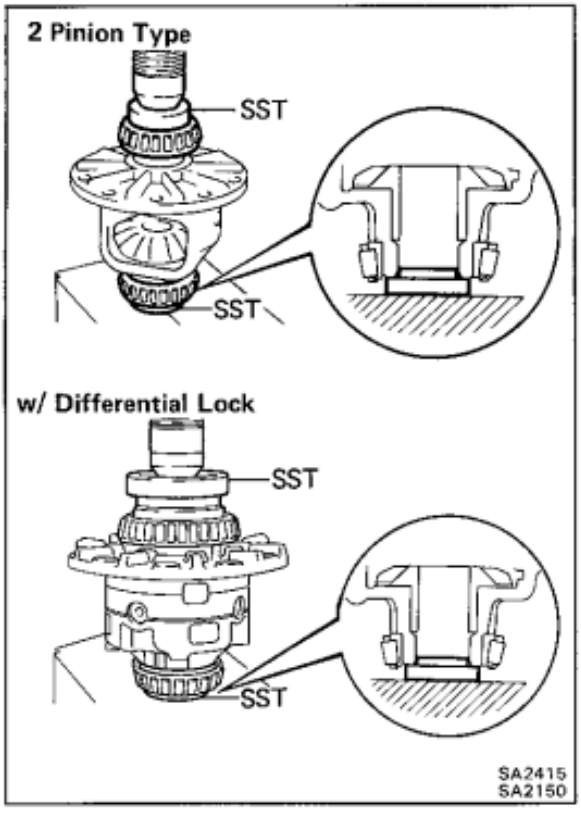

ASSEMBLY OF DIFFERENTIAL CARRIER

(See page SA-60)

1. INSTALL SIDE BEARINGS

Using SST and a press, install the two side bearings on the differential case.

SST

2 pinion type
09608-30012 (09608-00060, 09608-04060)
w/ Differential lock (4 pinion type)
09223-15020 and 09608-30012 (09608-04060)

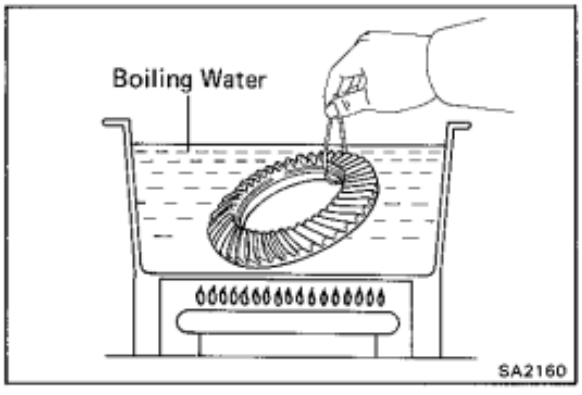

2. INSTALL RING GEAR ON DIFFERENTIAL CASE

(a) Clean the contact surfaces of the differential case and ring gear.

(b) Heat the ring gear in boiling water.

(c) After the moisture on the ring gear has completely evaporated, quickly install the ring gear to the differential case.

HINT: Align matchmarks on the ring gear and the differential case.

(d) Temporarily install five new lock plates and the ten bolts so that the bolt holes in the ring gear and differential case are not misaligned.

NOTICE: The ring gear set bolts should not be tightened until the ring gear has cooled sufficiently.

(e) After the ring gear has cooled sufficiently, torque the ring gear set bolts.

Torque: 985 kg-cm (71 ft-lb, 97 N·m)

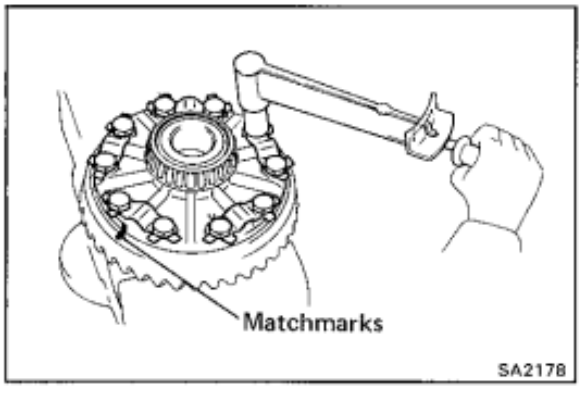

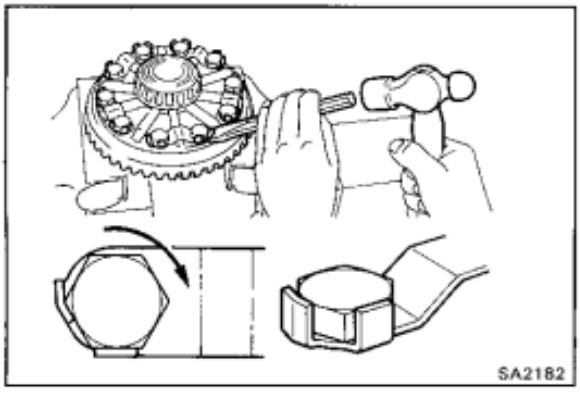

(f) Using a hammer and drift punch, stake the lock plates.

HINT: Stake one claw flush with the flat surface of the nut. For the claw contacting the protruding portion of the nut, stake the half on the tightening side.

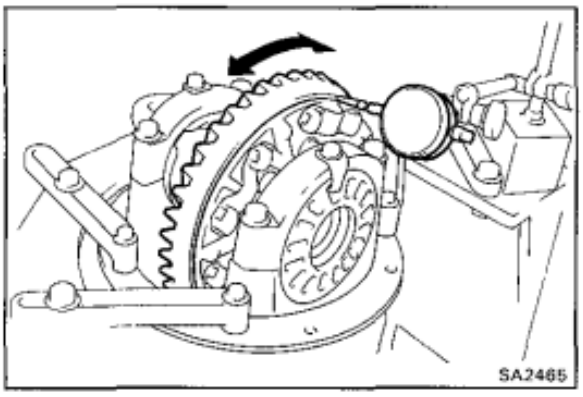

3. CHECK RING GEAR RUNOUT

(a) Install the differential case onto the carrier.

(b) Install bearing caps. (See page SA-73)

(c) Using a dial indicator, measure the runout of ring gear.

Maximum runout: 0.10 mm (0.0039 in.)

(d) Remove the differential case.
(See step 7 on page SA-65)

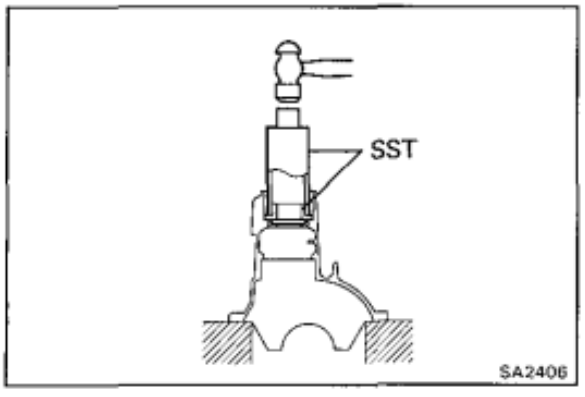

**4. (FJ, PZJ, HZJ)
INSTALL OIL STORAGE RING**

Using SST and a hammer, install a new oil storage ring.

SST 09316-60010 (09316-00010, 09316-00020)

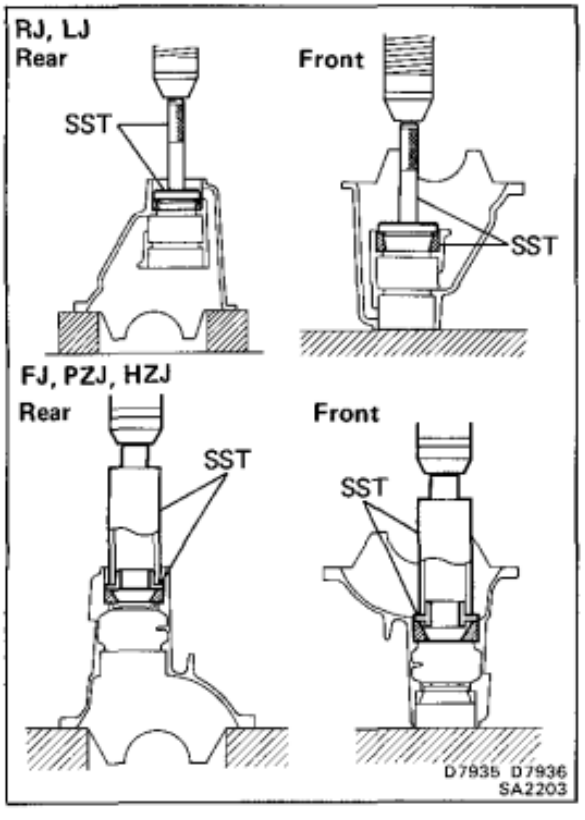

5. INSTALL DRIVE PINION FRONT AND REAR BEARING OUTER RACES

Using SST and a press, install the outer races.

SST 09608-30012 (RJ, LJ)
Rear (09608-04020, 09608-04110)
Front (09608-04020, 09608-04100)
09316-60010 (FJ, PZJ, HZJ)
Rear (09316-00010, 09316-00020)
Front (09316-00010, 09316-00050)

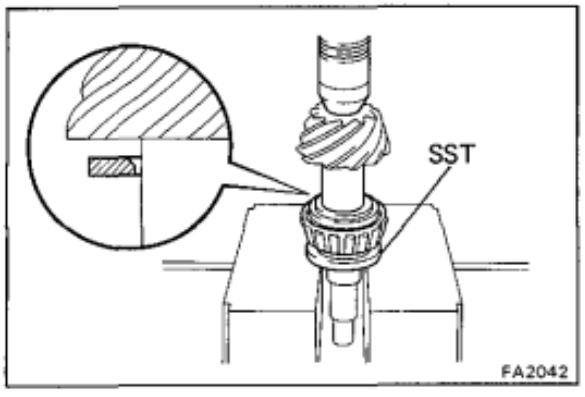

6. INSTALL DRIVE PINION FRONT BEARING

(a) Install the washer on the drive pinion with the chamfered end facing the pinion gear.
HINT: First fit a washer with the same thickness as the washer which was removed, then after checking the teeth contact pattern, replace the washer with one of a different thickness if necessary.

(b) Using SST, press in the front bearing onto the drive pinion.

SST 09506-30012

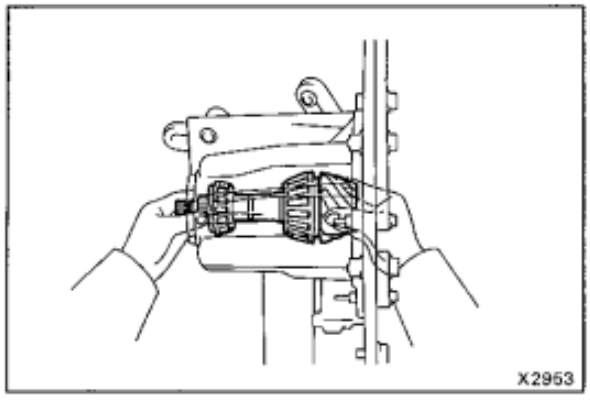

7. TEMPORARILY ADJUST DRIVE PINION PRELOAD

(a) Install the drive pinion, rear bearing and oil slinger.

HINT: Assemble the spacer and oil seal after adjusting the teeth contact pattern.

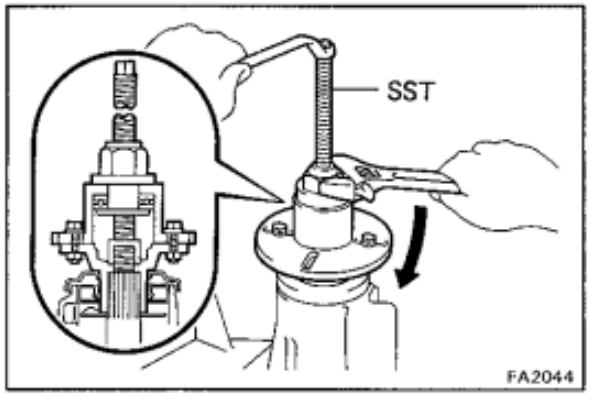

(b) Using SST, install the companion flange.

SST 09557-22022 (09557-22050)

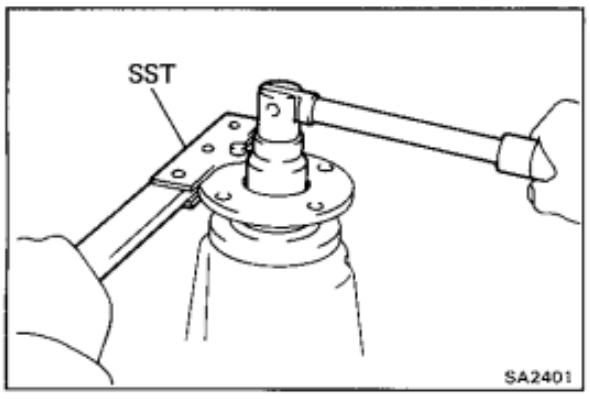

(c) Adjust the drive pinion preload by tightening the plate washer and companion flange nut.

HINT: Using SST to hold the flange, tighten the nut .

SST 09330-00021

NOTICE: As there is no spacer, tighten the nut a little at a time, being careful not to overtighten it.

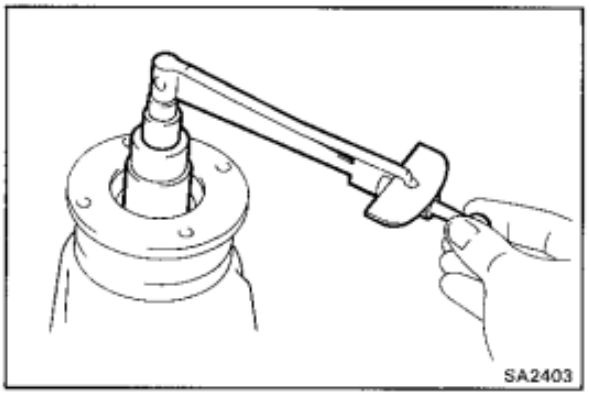

(d) Using a torque meter, measure the preload.

Preload (at starting):

Models	New bearing	Reused bearing
RJ, LJ	19 — 26 kg-cm (16.5 — 22.6 in.-lb, 1.9 — 2.5 N·m)	9 — 13 kg-cm (7.8 — 11.3 in.-lb, 0.9 — 1.3 N·m)
FJ, PZJ, HZJ	10 — 16 kg-cm (8.7 — 13.9 in.-lb, 0.9 — 1.6 N·m)	5 — 8 kg-cm (4.3 — 6.9 in.-lb, 0.5 — 0.8 N·m)

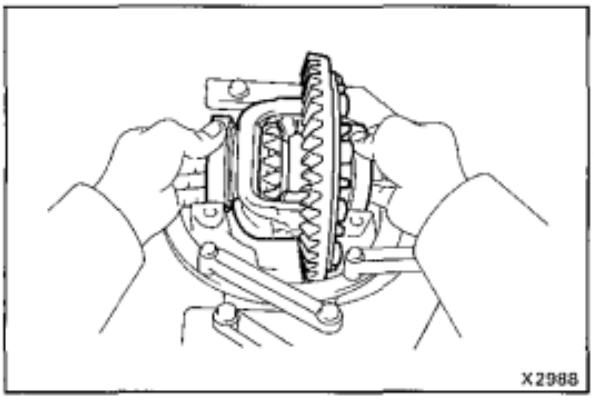

8. **INSTALL DIFFERENTIAL CASE AND ADJUSTING NUTS (2 PINION TYPE)**

(a) Place the bearing outer races on their respective bearings. Make sure that the left and right outer races are not interchanged.

(b) Install the case in the carrier.

HINT: Make sure that there is backlash between the ring gear and drive pinion.

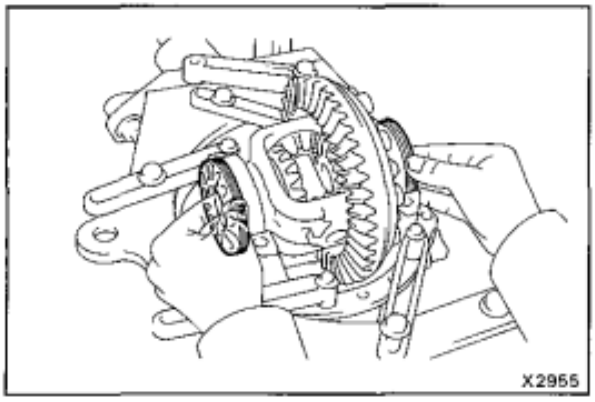

(c) Install the adjusting nuts on the carrier, making sure that the nuts are threaded properly.

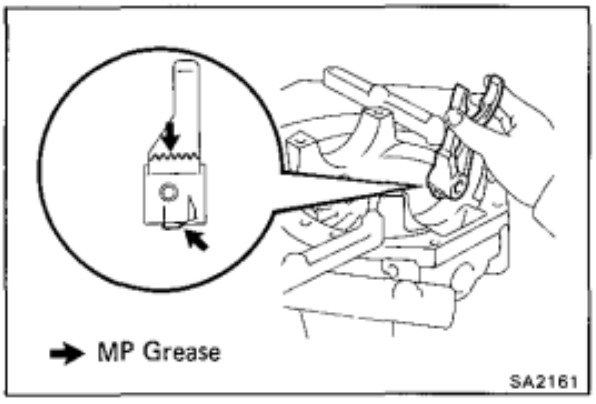

(w/ DIFFERENTIAL LOCK)

(a) Apply MP grease on the rack of the shift fork and connecting part of the indicator switch.

(b) Insert the shift fork into the differential carrier as shown.

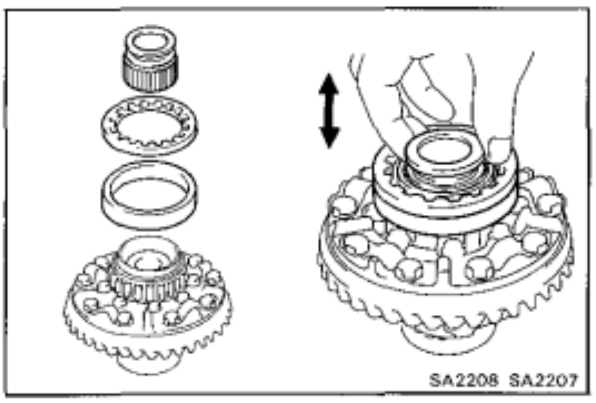

(c) Install both bearing outer races, adjusting nuts and sleeve to the differential case.

HINT: Check that the sleeve moves smothly.

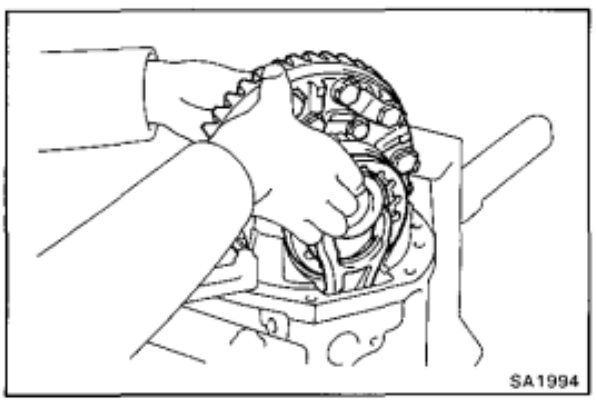

(d) Install the shift fork in the groove of the sleeve, holding it by hand, install the case in the carrier.

HINT: Make sure that there is backlash between the ring gear and drive pinion.

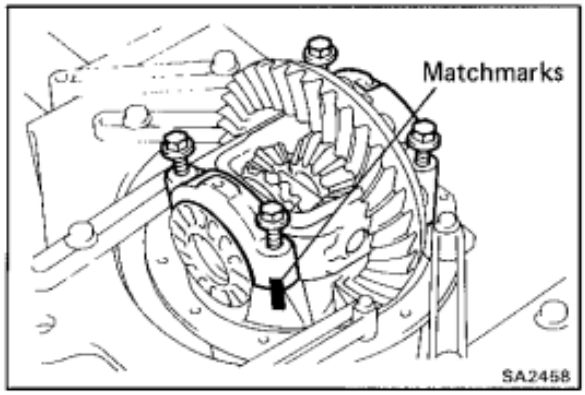

9. INSTALL BEARING CAPS

Align matchmarks on the cap and carrier. Screw in the two bearing cap bolts two or three turns and press down the bearing cap by hand.

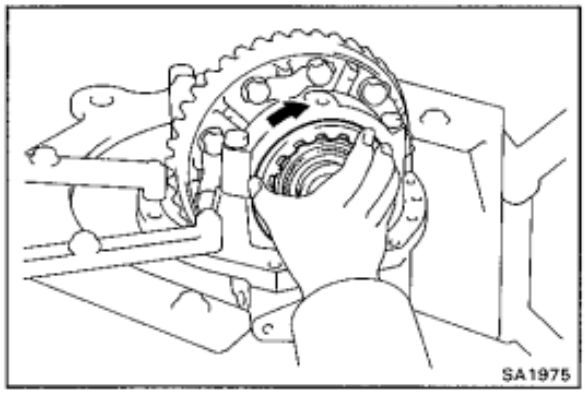

HINT: If the bearing cap does not fit tightly on the carrier, the adjusting nuts are not threaded properly. Reinstall the adjusting nuts if necessary.

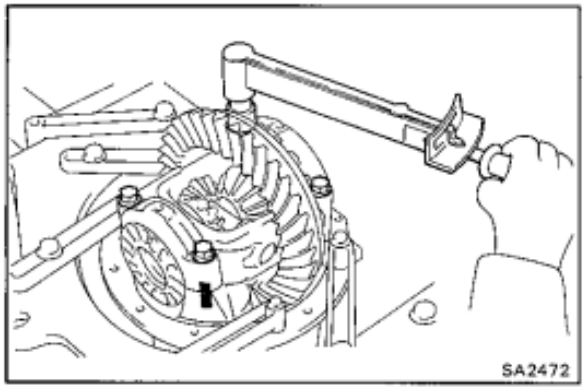

10. ADJUST SIDE BEARING PRELOAD

(a) Tighten the four bearing cap bolts to the specified torque, then loosen them to the point where they can be turned by hand.

Torque: 800 kg-cm (58 ft-lb, 78 N·m)

(b) Fully tighten the four bearing cap bolts by hand.

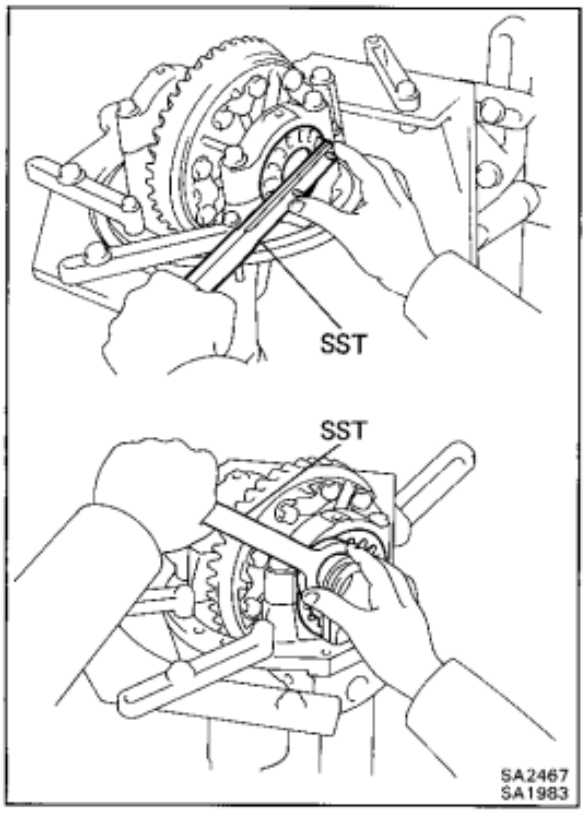

(c) Using SST, tighten the adjusting nut on the ring gear side until the ring gear has a backlash of about 0.2 mm (0.008 in.).

SST 09504-00011 or 09616-30020

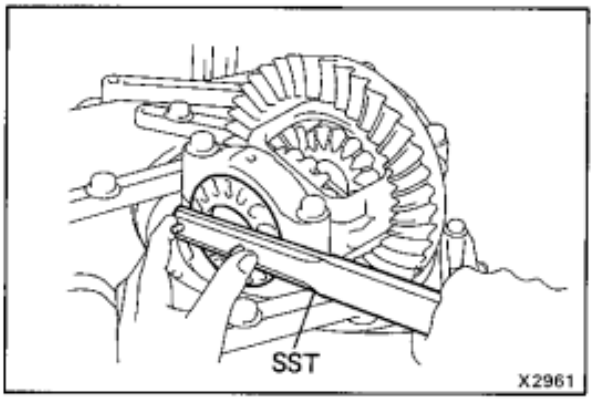

(d) While turning the ring gear, use SST to fully tighten the adjusting nut on the drive pinion side. After the bearings are settled, loosen the adjusting nut on the drive pinion side.

SST 09504-00011

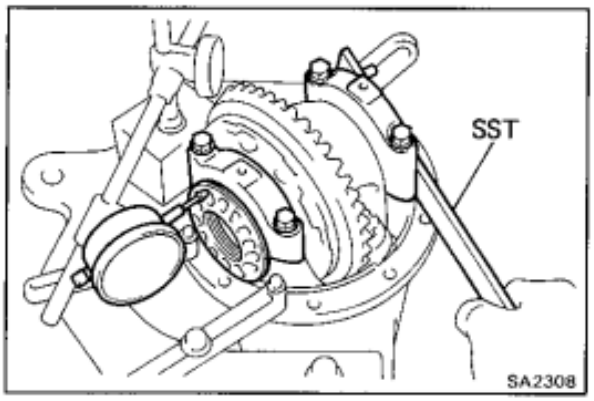

(e) Place a dial indicator on the top of the adjusting nut on the ring gear side.

(f) Adjust the side bearing for zero preload by tightening the other adjusting nut until the pointer on the indicator begins to move.

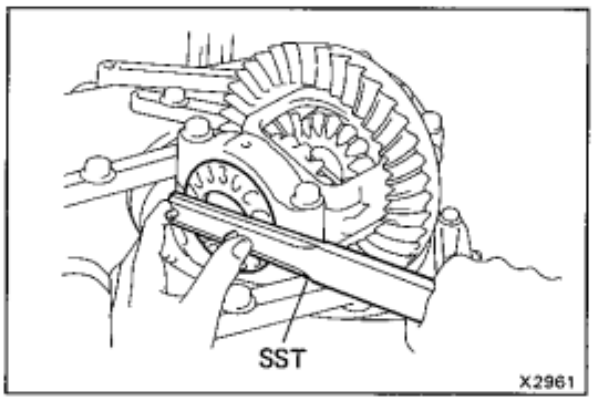

(g) Tighten the adjusting nut 1 - 1 1/2 notches from the zero preload position.

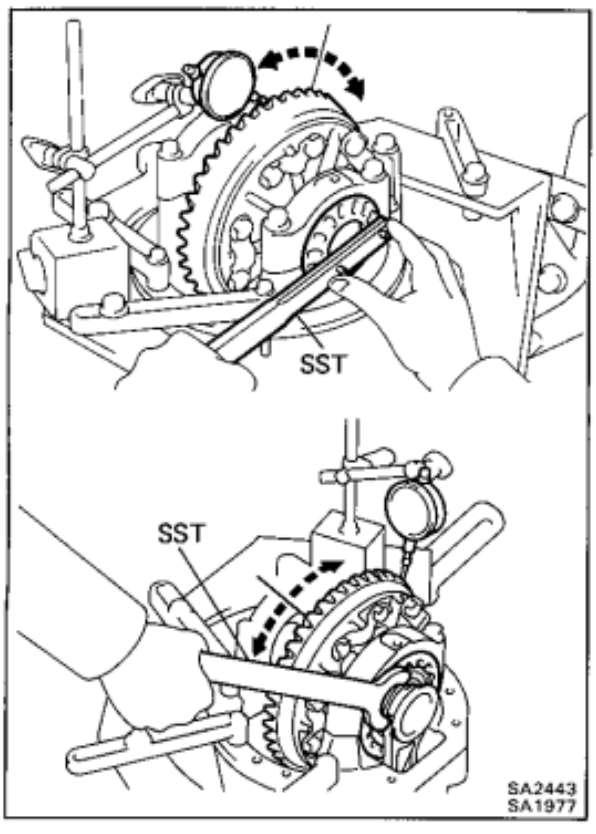

(h) Using a dial indicator, adjust the ring gear backlash until it is within specification.

Backlash: 0.13 — 0.18 mm (0.0051 — 0.0071 in.)

HINT: The backlash is adjusted by turning the left and right adjusting nuts equal amounts. For example, loosen the nut on the left side one notch and tighten the nut on the right side one notch.

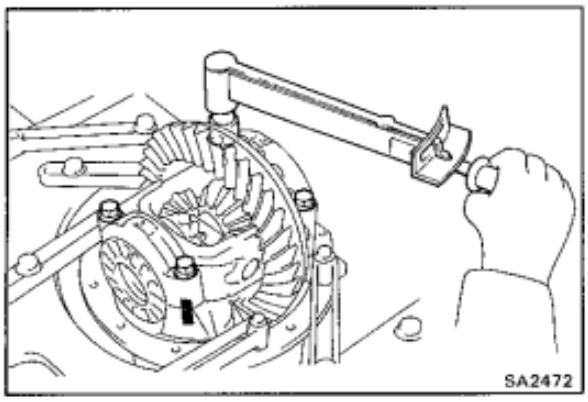
SA2472

(i) Torque the bearing cap bolts.

Torque: 800 kg-cm (58 ft-lb, 78 N·m)

(j) Recheck the ring gear backlash.

Backlash: 0.13 — 0.18 mm (0.0051 — 0.0071 in.)

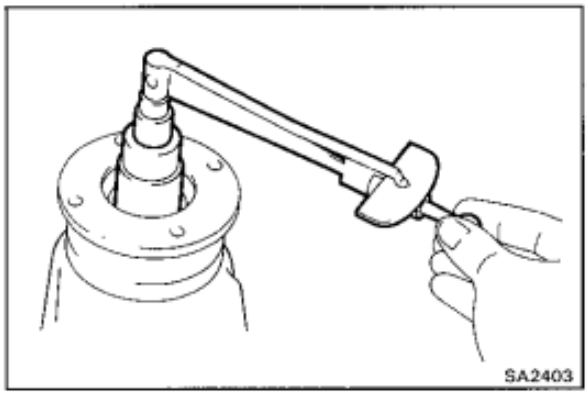
SA2403

(k) Using a torque meter, measure the total preload.

Total preload (at starting):
Add drive pinion preload
4 — 6 kg-cm
(3.5 — 5.2 in.-lb, 0.4 — 0.6 N·m)

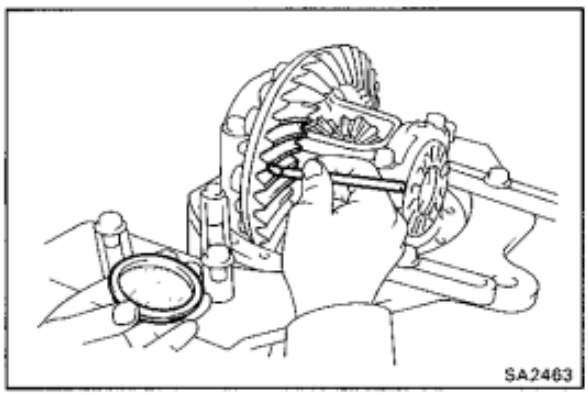
SA2463

11. INSPECT TEETH CONTACT BETWEEN RING GEAR AND DRIVE PINION

(a) Coat 3 or 4 teeth at three different positions on the ring gear with red lead.

(b) Hold the companion flange firmly and rotate the ring gear in both directions.

(c) Inspect the teeth pattern.

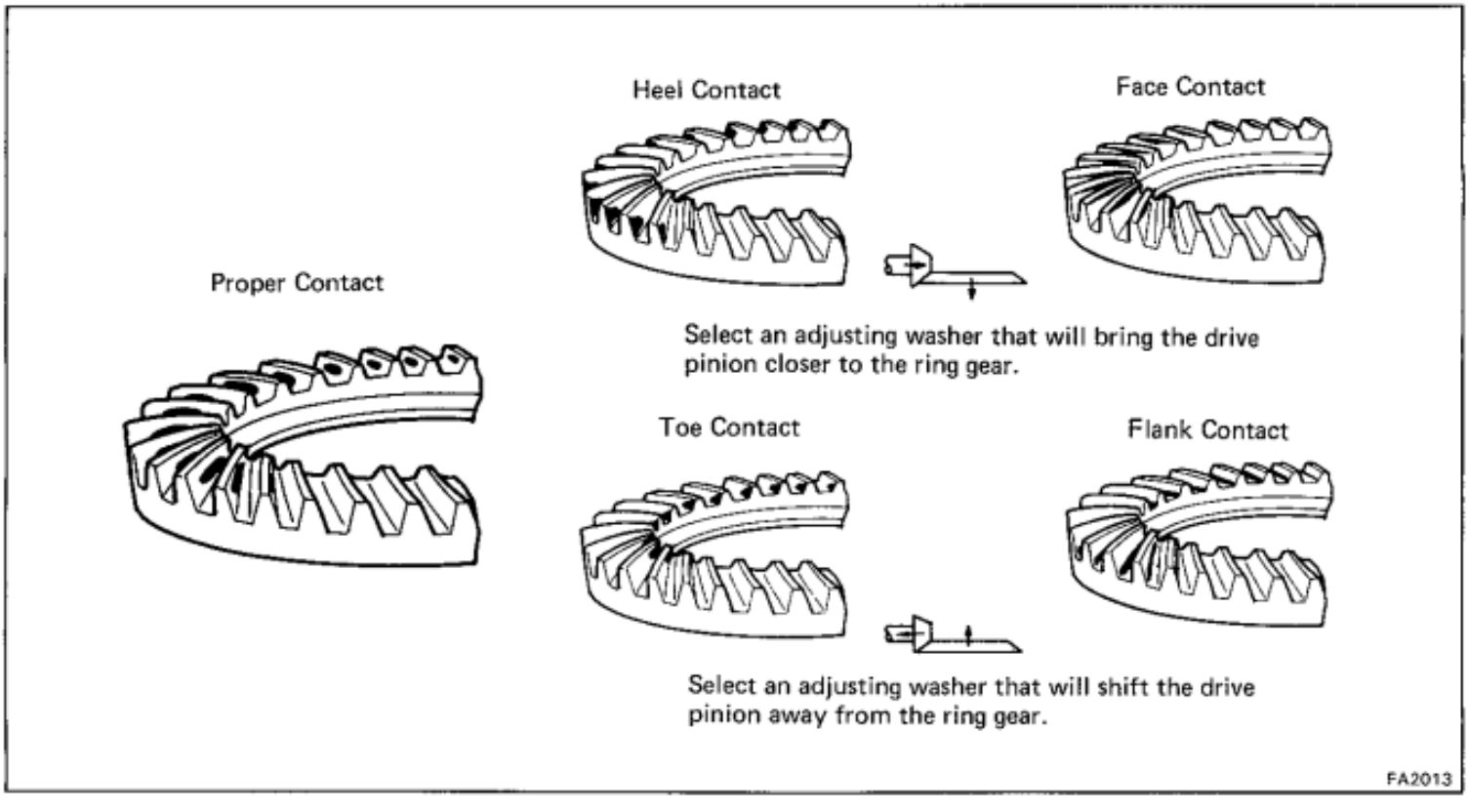

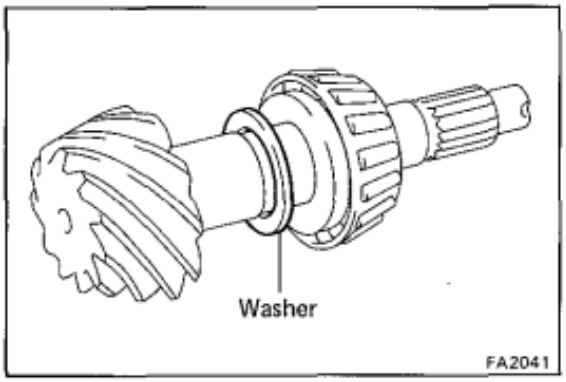

If the teeth are not contacting properly, use the following chart to select a proper washer for correction.

HINT: In the case of face contact or flank contact, it may be possible to make the adjustment within the backlash specification limits.

Washer thickness mm (in.)	
1.70 (0.0669)	2.03 (0.0799)
1.73 (0.0681)	2.06 (0.0811)
1.76 (0.0693)	2.09 (0.0823)
1.79 (0.0705)	2.12 (0.0835)
1.82 (0.0717)	2.15 (0.0846)
1.85 (0.0728)	2.18 (0.0858)
1.88 (0.0740)	2.21 (0.0870)
1.91 (0.0752)	2.24 (0.0882)
1.94 (0.0764)	2.27 (0.0894)
1.97 (0.0776)	2.30 (0.0906)
2.00 (0.0787)	2.33 (0.0917)

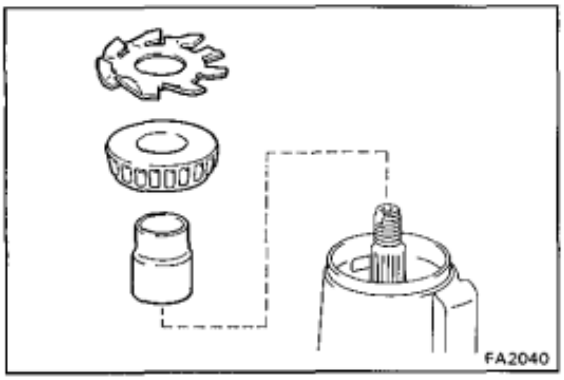

12. INSTALL NEW BEARING SPACER

(a) Remove the companion flange.
(See step 4 on page SA-64)

(b) Remove the oil slinger and rear bearing.
(See steps 5, 6 on pages SA-64, 65)

(c) Install a new bearing spacer.

(d) Install the rear bearing and oil slinger.

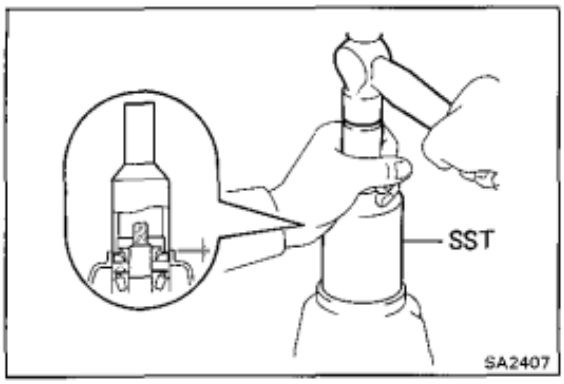

13. INSTALL OIL SEAL

(a) Using SST and a hammer, install a new oil seal.

SST 09554-30011 (RJ, LJ)
09214-76011 (FJ, PZJ, HZJ)

Oil seal drive in depth: 1.0 mm (0.039 in.)

(b) Coat the lip of oil seal with MP grease.

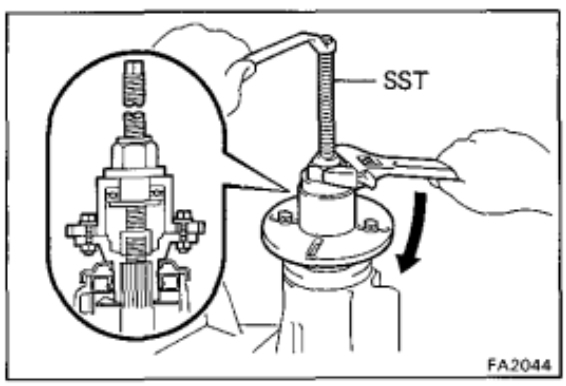

14. INSTALL COMPANION FLANGE

(a) Using SST, install the companion flange.

SST 09557-22022 (09557-22050)

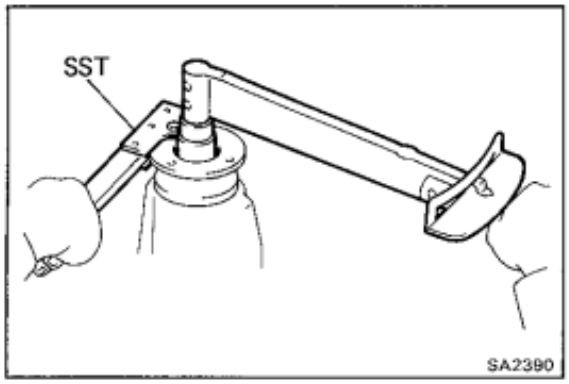

(b) Install the plate washer and a new nut.

HINT: Coat the threads of nut with gear oil.

(c) Using SST to hold the flange, tighten the nut.

SST 09330-00021

Torque: 2,000 kg-cm (145 ft-lb, 196 N·m)

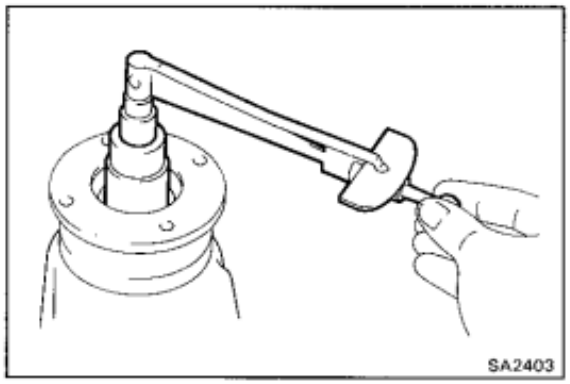

15. ADJUST DRIVE PINION PRELOAD

Using a torque meter, measure the preload of the backlash between the drive pinion and ring gear.

Preload (at starting):

Models	New bearing	Reused bearing
RJ, LJ	19 — 26 kg-cm (16.5 — 22.6 in.-lb 1.9 — 2.5 N·m)	9 — 13 kg-cm (7.8 — 11.3 in.-lb 0.9 — 1.3 N·m)
FJ, PZJ, HZJ	10 — 16 kg-cm (8.7 — 13.9 in.-lb 0.9 — 1.6 N·m)	5 — 8 kg-cm (4.3 — 6.9 in.-lb 0.5 — 0.8 N·m)

- If the preload is greater than specification, replace the bearing spacer.
- If the preload is less than specification, retighten the nut 130 kg-cm (9 ft-lb, 13 N·m) a little at a time until the specified preload is reached.

If the maximum torque is exceeded while retightening the nut, replace the bearing spacer and repeat the preload procedure. Do not back off the pinion nut to reduce the preload.

Maximum torque: 3,500 kg-cm (253 ft-lb, 343 N·m)

If everything is normal, coat the threads with gear oil, then repeat the above operation.

16. RECHECK RING GEAR BACKLASH
(See step 3 on page SA-61)

17. RECHECK TEETH CONTACT BETWEEN RING GEAR AND DRIVE PINION
(See step 11 on page SA-75)

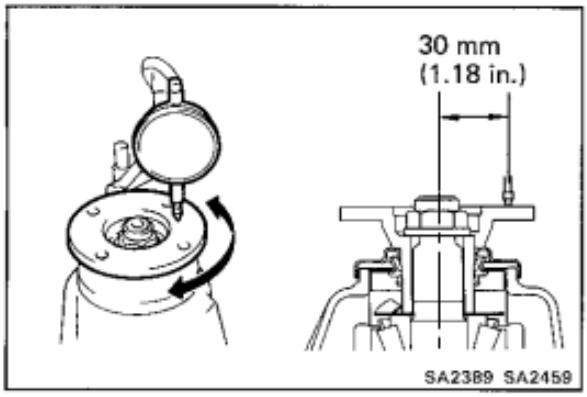

18. CHECK RUNOUT OF COMPANION FLANGE

Using a dial indicator, measure the vertical and lateral runout of the companion flange.

Maximum vertical runout: 0.10 mm (0.0039 in.)

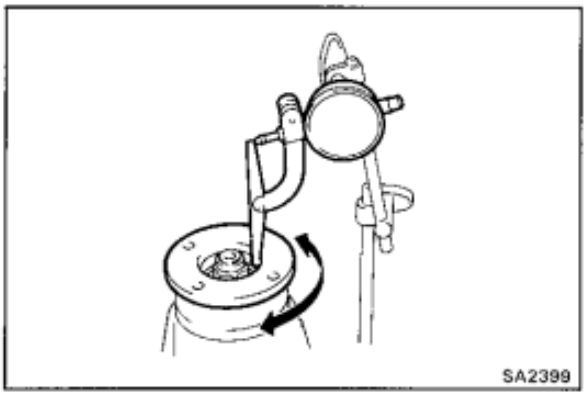

Maximum lateral runout: 0.10 mm (0.0039 in.)

If the runout is greater than the maximum, inspect the bearing.

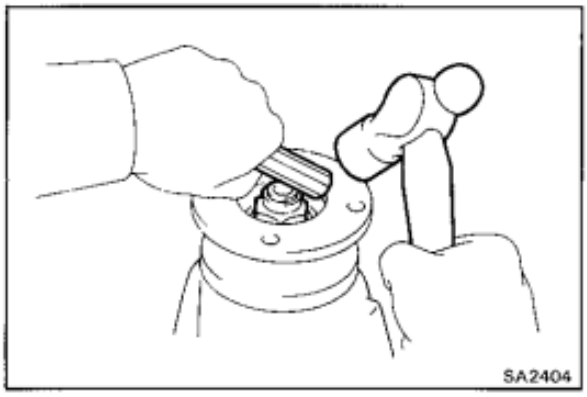

19. STAKE DRIVE PINION NUT

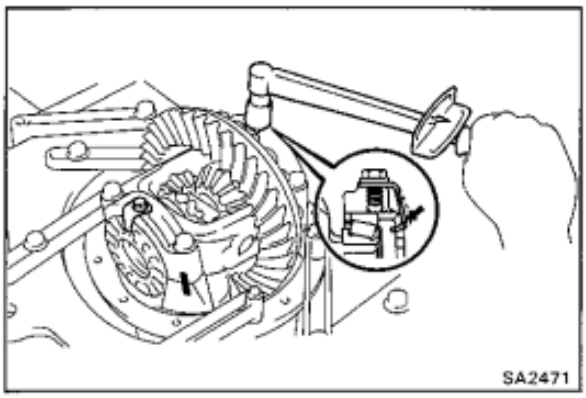

20. INSTALL ADJUSTING NUT LOCKS

(a) Install two new nut locks on the bearing caps.

Torque: 130 kg-cm (9 ft-lb, 13 N·m)

(b) After tightening the bolts, bend the nut locks.

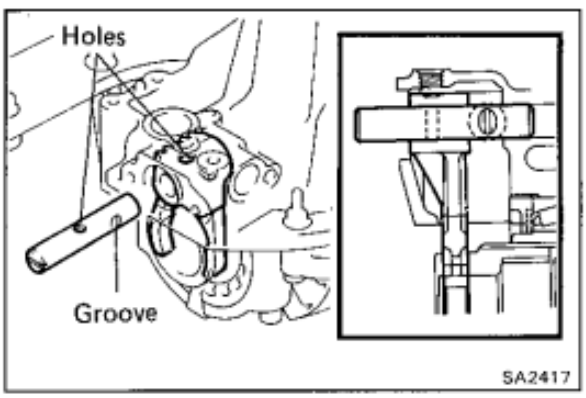

21. (w/ DIFFERENTIAL LOCK)
INSTALL SHIFT FORK SHAFT

(a) Apply MP grease onto the outer circuit of the fork shaft.

(b) Install the fork shaft to match the hole of the shift fork and that of the shift fork shaft.

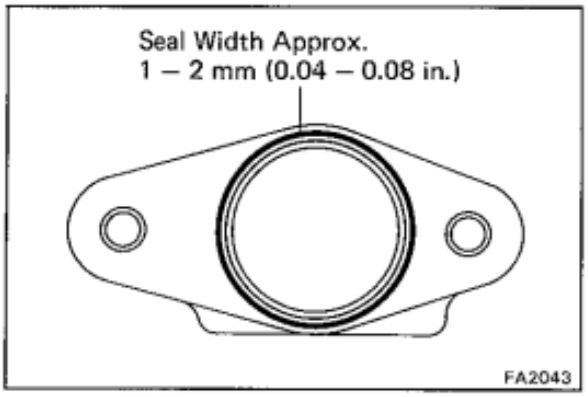

(c) Remove any packing material and be careful not to drop oil on the contacting surface of the differential carrier and shaft retainer.

(d) Apply seal packing to the carrier as shown.

Seal packing: Part No. 08826-00090, THREE BOND 1281 or equivalent

HINT: Install the shaft retainer within ten minutes after applying seal packing.

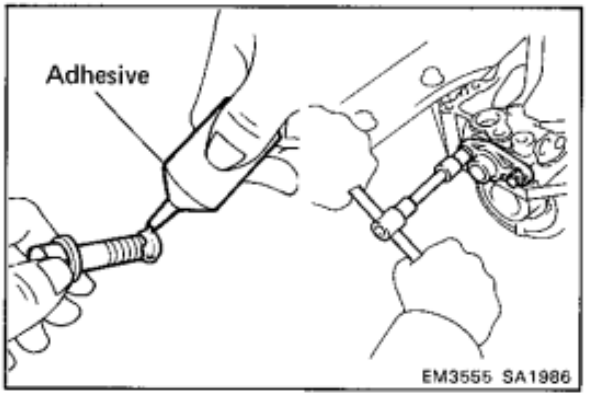

(e) Clean the threads of the bolts and retainer bolts holes with toluene or trichloroethylene.

(f) Apply adhesive to the bolt threads.

Adhesive: Part No. 08833-00080, THREE BOND 1344 LOCTITE 242 or equivalent

(g) Tighten the shaft retainer with the two bolts.

Torque: 240 kg-cm (17 ft-lb, 24 N·m)

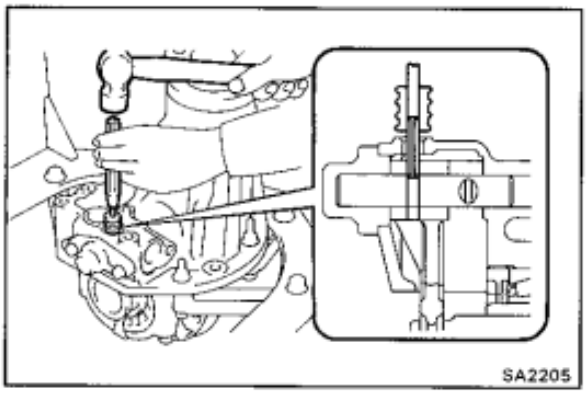

(h) Using a pin punch and hammer, drive in the slotted spring pin to the shift fork.

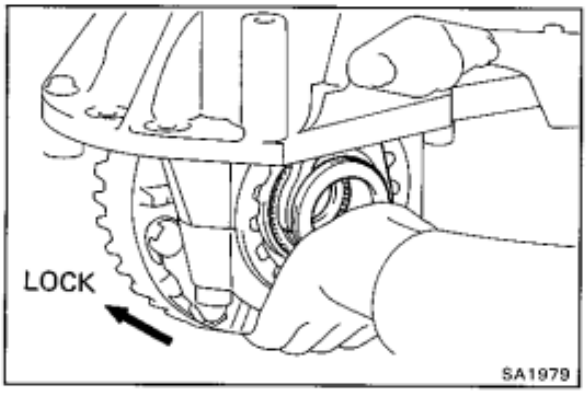

(i) Shift the shift fork deeply and keep the differential lock condition.

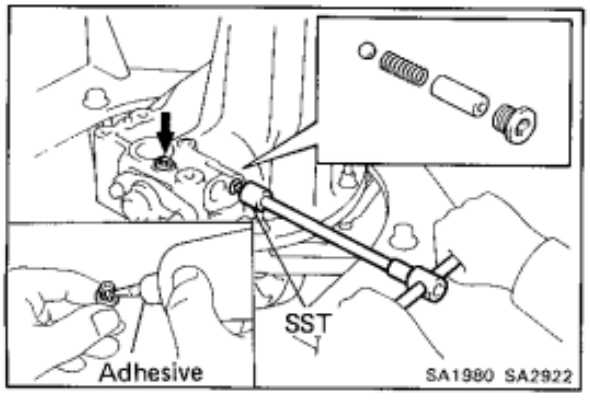

(j) Clean the threads of the plugs and plug holes with toluene or trichoroethylene.

(k) Install the ball, compression spring and spring seat.

(l) Apply adhesive to the plug threads.

Adhesive: Part No. 08833-00080, THREE BOND 1344, LOCTITE 242 or equivalent

(m) Using SST, install and tighten the screw plugs.

SST 09313-30021

Torque: 220 kg-cm (16 ft-lb, 22 N·m)

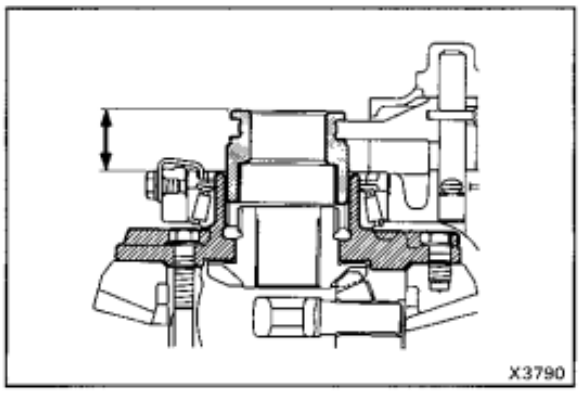

22. **(w/ DIFFERENTIAL LOCK)**
MEASURE DISTANCE BETWEEN SLEEVE AND DIFFERENTIAL CASE END SIDE

Measure the distance between the sleeve and the tip of the differential case when differential is free and locked.

Standard distance:

LOCK	**32.40 — 33.90 mm (1.2756 — 1.3346 in.)**
FREE	**17.44 — 18.86 mm (0.6866 — 0.7425 in.)**

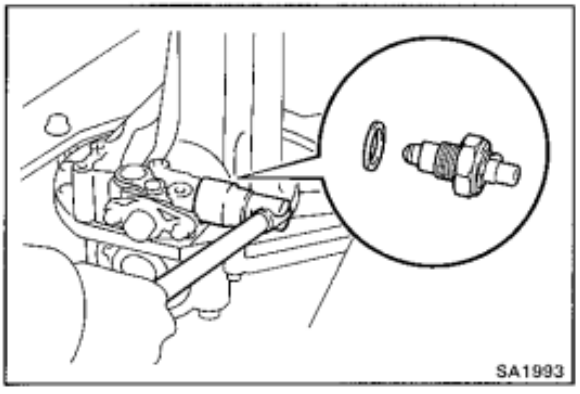

23. **(w/ DIFFERENTIAL LOCK)**
INSTALL INDICATOR SWITCH

Install the indicator switch with a new gasket.

Torque: 410 kg-cm (30 ft-lb, 40 N·m)

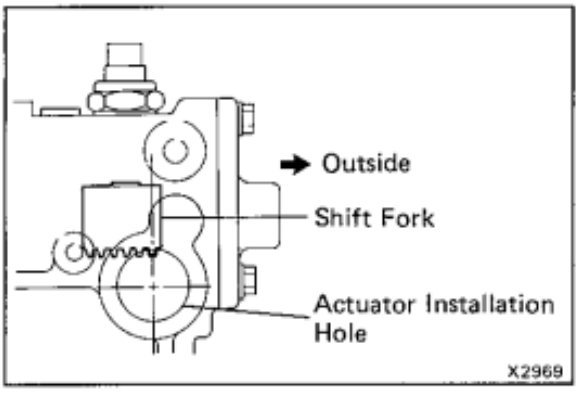

24. **(w/ DIFFERENTIAL LOCK)**
INSTALL ACTUATOR

(a) Check that the outermost rack tooth of the shift fork is virtually above the center line of the actuator installation hole.

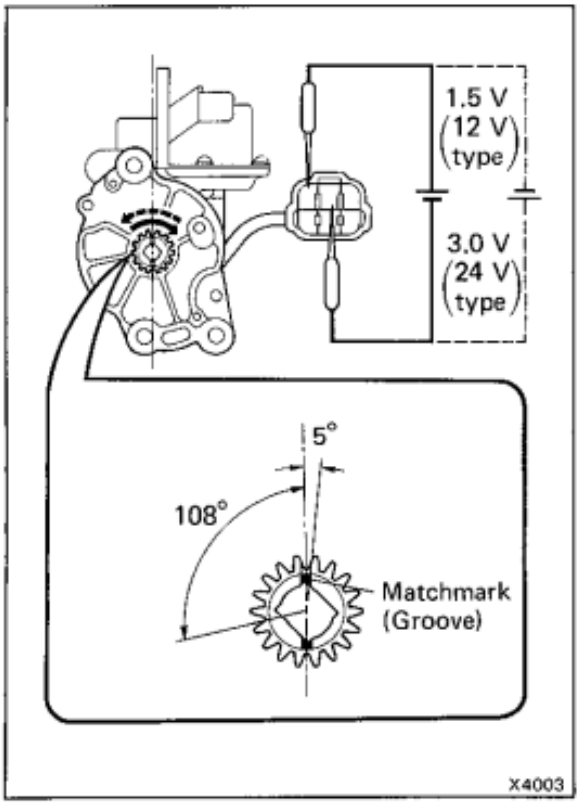

(b) Make sure that the matchmark of the pinion on the actuator is in between 0° to 5° degrees clockwise from the center line of the actuator.

HINT:

- Using a dry cell battery (12 V type is 1.5 V, 24 V type is 3.0 V), fit the matchmark on the actuator pinion to the center line of the actuator.
- Do not add battery voltage directly between terminals.
- When the matchmark comes to the end of rotation, do not electrify any longer.

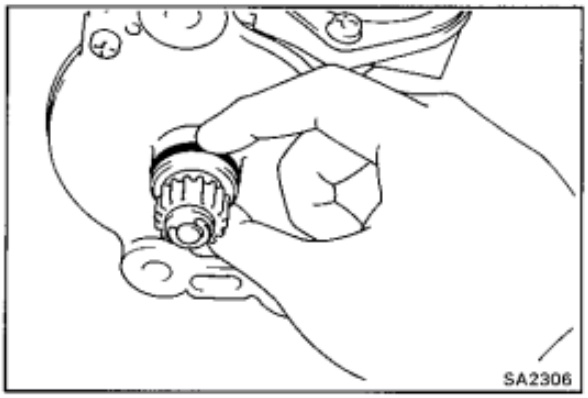

(c) Install a new O-ring to the actuator.

(d) Apply a light coat of gear oil on the O-ring.

(e) Apply MP grease to the gear part.

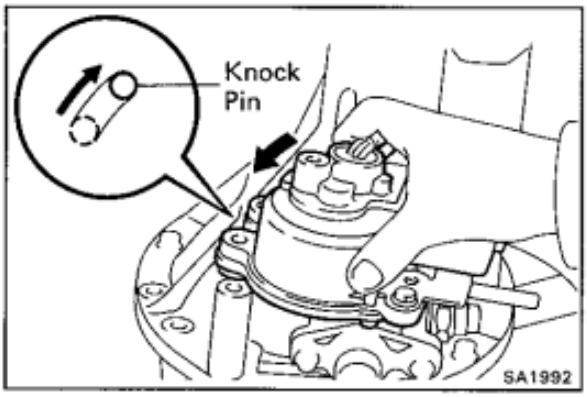

(f) Insert the actuator so that the long hole on the actuator side fits with the knock pin on the carrier side.

HINT: Do not damage the O-ring of the actuator.

(g) Align the actuator with the long hole and rotate the actuator counterclockwise when the knock pin reaches the right-hand side.

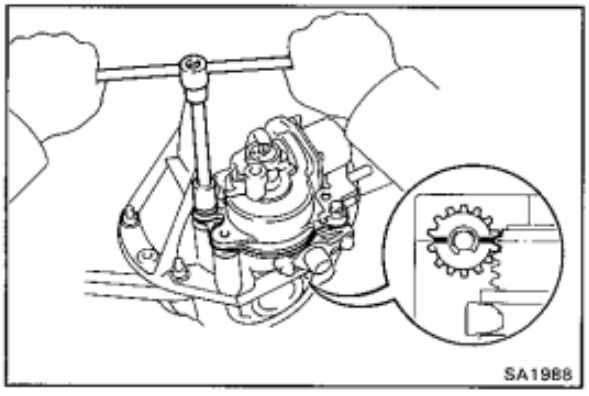

(h) Install the actuator to the differential carrier with bolt so that the outermost rack tooth of the shift fork shall fit the matchmark of the pinion of the actuator.

Torque: 270 kg-cm (20 ft-lb, 26 N·m)

Differential Case (2 Pinion Type)

COMPONENTS

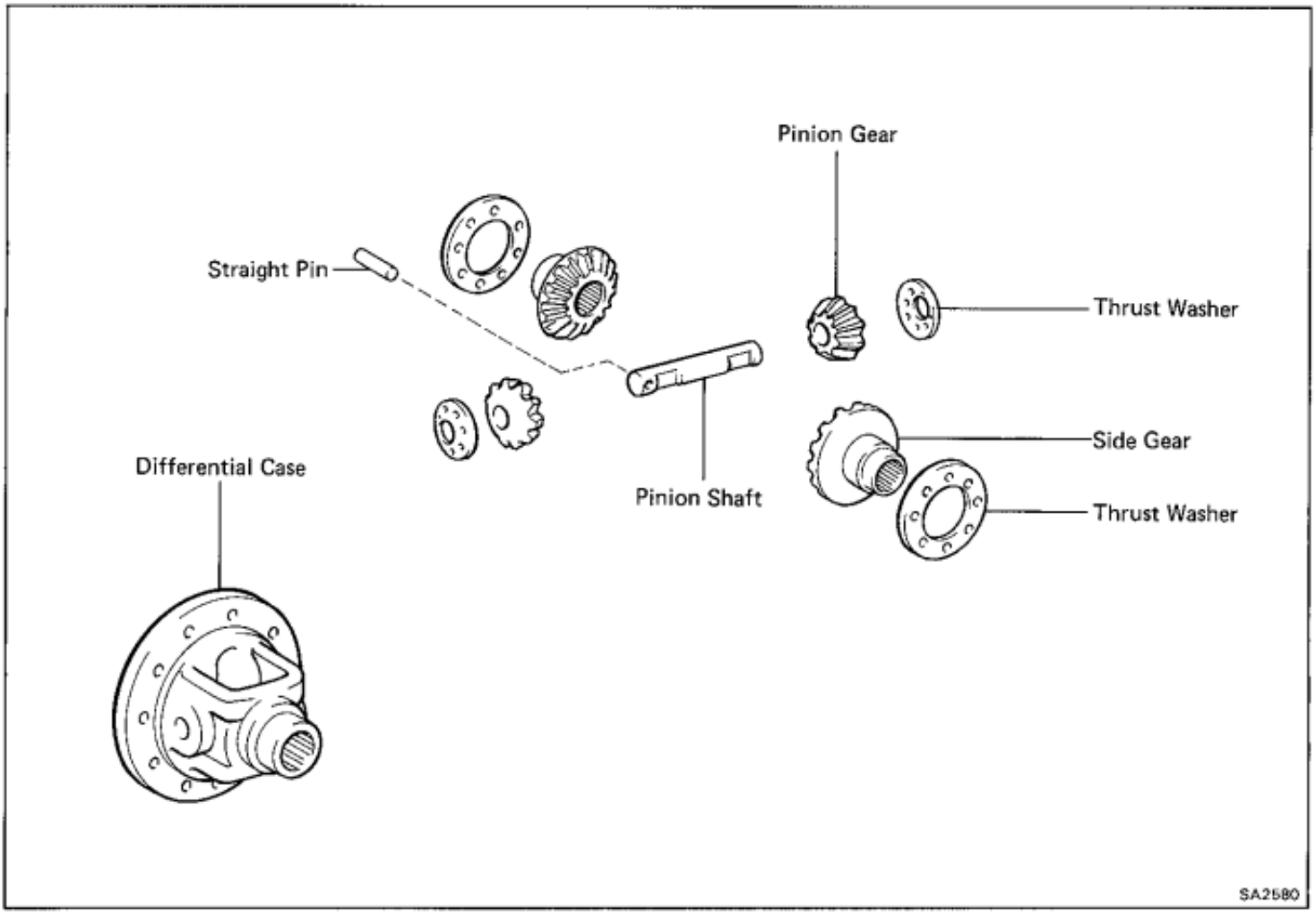

REMOVAL OF DIFFERENTIAL CASE

1. **REMOVE DIFFERENTIAL (See page SA-54)**
2. **REMOVE DIFFERENTIAL CASE FROM CARRIER (See page SA-60)**

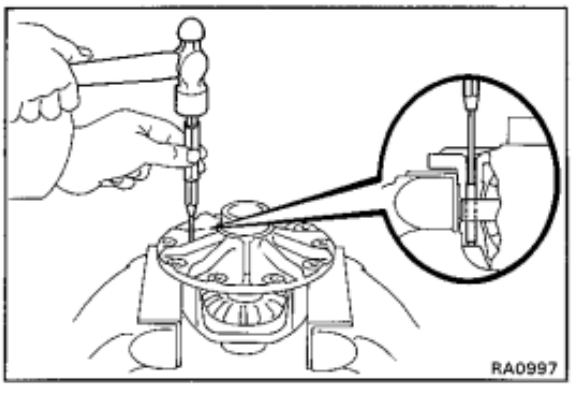

REPLACEMENT OF DIFFERENTIAL CASE COMPONENT PARTS

1. **DISASSEMBLE DIFFERENTIAL CASE**

   Using a hammer and punch, drive out the straight pin. Remove the pinion shaft, two pinion gears, two side gears and four thrust washers.

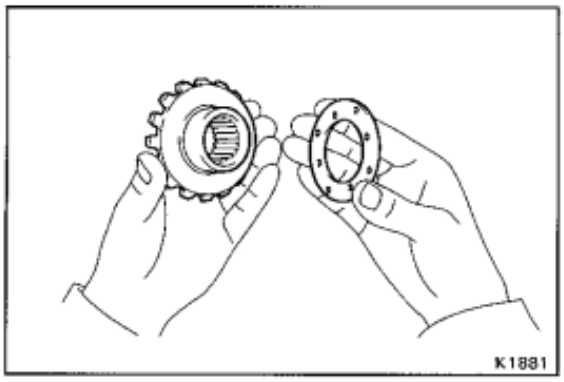

2. ASSEMBLE DIFFERENTIAL CASE

(a) Apply gear oil to each part.

(b) Install the proper thrust washers and side gears.

Using the table below, select thrust washers which will ensure that the backlash is within specification. Try to select washers of the same size for both sides.

Standard backlash: 0.05 — 0.20 mm (0.0020 — 0.0079 in.)

Thrust washer thickness mm (in.)
1.6 (0.063)
1.7 (0.067)
1.8 (0.071)

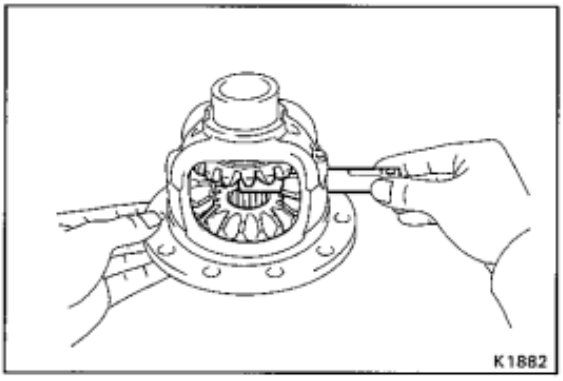

(c) Install thrust washers, side gears, pinion gears and pinion shaft in the differential case.

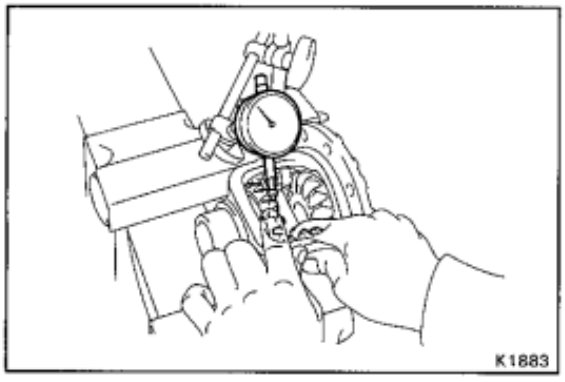

(d) Check the side gear backlash.

Measure the side gear backlash while holding one pinion gear toward the case.

Standard backlash: 0.05 — 0.20 mm (0.0020 — 0.0079 in.)

If the backlash is not within specification, install a thrust washer of different thickness.

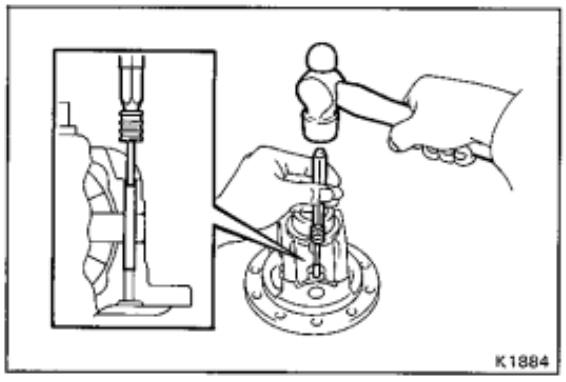

(e) Using a hammer and punch, install the straight pin through the case and hole of the pinion shaft.

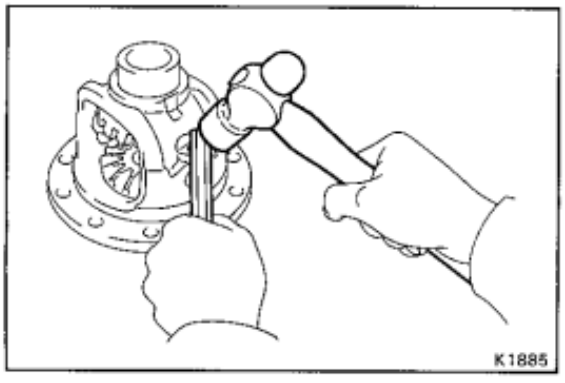

(f) Stake the differential case.

INSTALLATION OF DIFFERENTIAL

1. INSTALL DIFFERENTIAL CASE IN CARRIER
(See page SA-60)

2. INSTALL DIFFERENTIAL
(See page SA-54)

Differential Case
(4 Pinion Type)

COMPONENTS

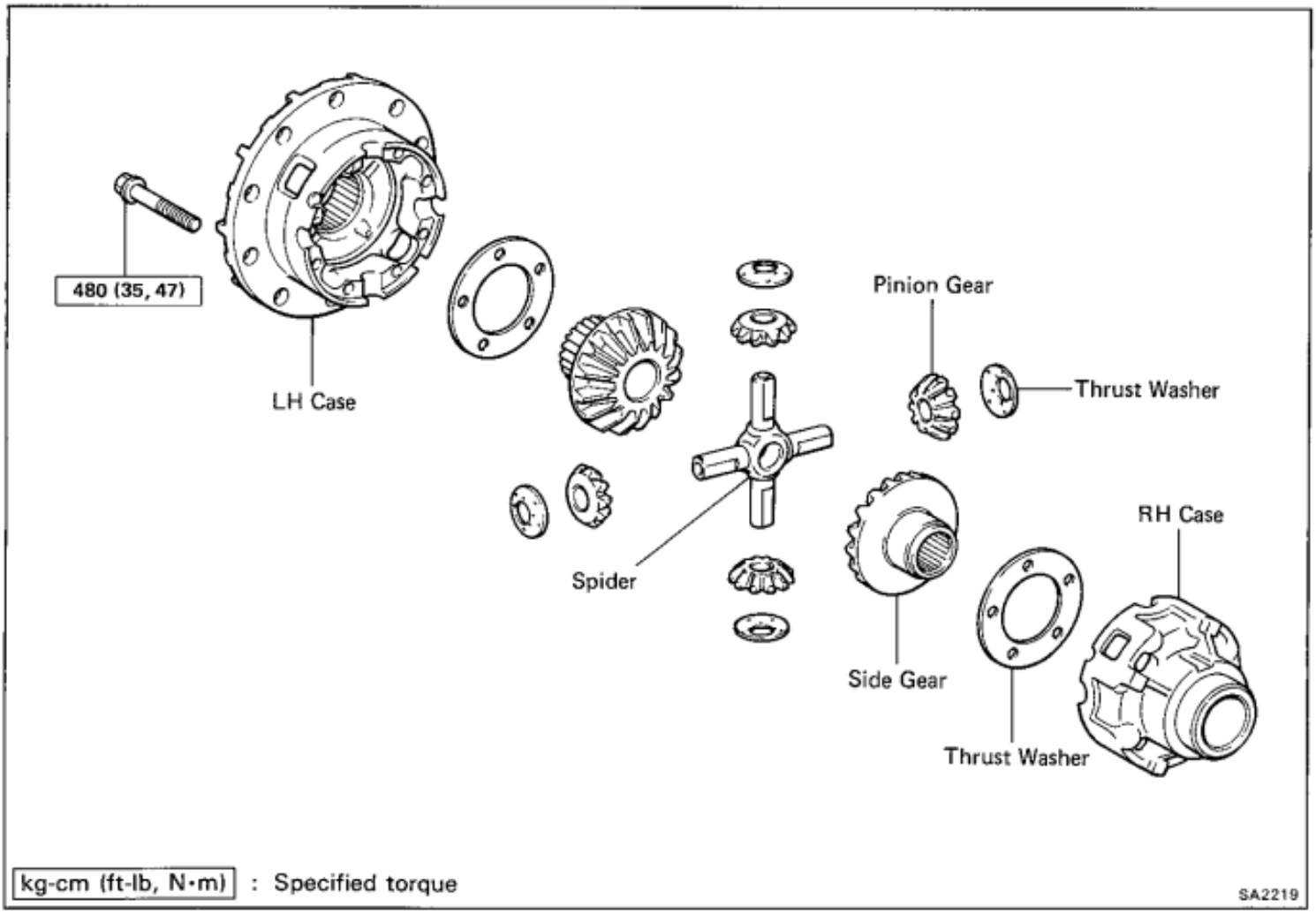

REMOVAL OF DIFFERENTIAL CASE

1. **REMOVE DIFFERENTIAL (See page SA-54)**
2. **REMOVE DIFFERENTIAL CASE FROM CARRIER (See page SA-60)**

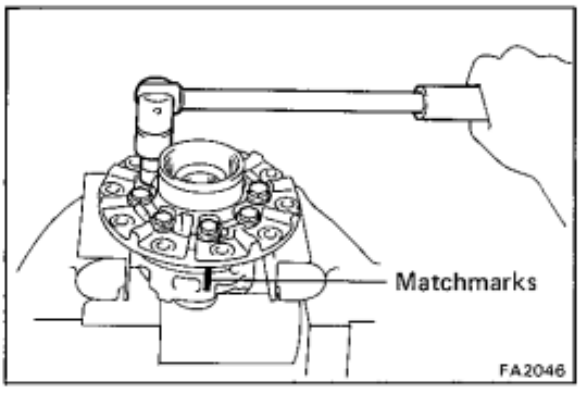

DISASSEMBLY OF DIFFERENTIAL CASE

1. **DISASSEMBLE DIFFERENTIAL CASE**
   (a) Place matchmarks on the LH and RH cases.
   (b) Remove the eight bolts uniformly, a little at a time.
   (c) Using a plastic hammer, separate the LH and RH cases.

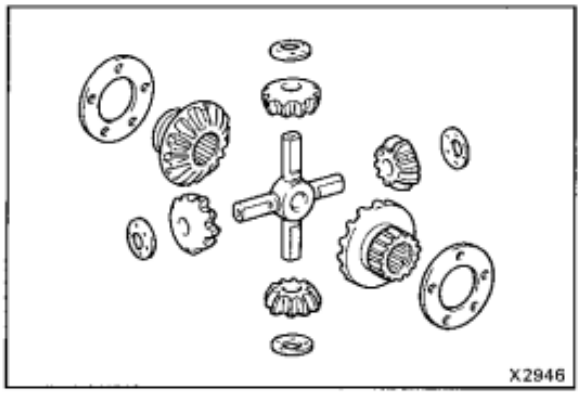

2. **REMOVE FOLLOWING PARTS FROM CASE:**
   - Side gear (2 pieces)
   - Side gear thrust washer (2 pieces)
   - Spider
   - Pinion gear (4 pieces)
   - Pinion gear thrust washer (4 pieces)

ASSEMBLY OF DIFFERENTIAL CASE

(See page SA-84)

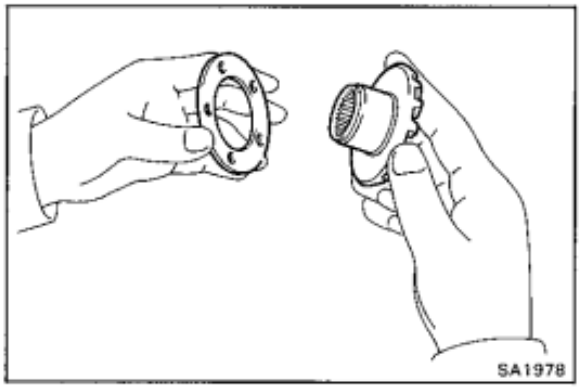

1. **MEASURE SIDE GEAR BACKLASH**
   (a) Apply gear oil to each part.
   (b) Install the thrust washer to the side gear.
   (c) Install the side gear to the RH case.

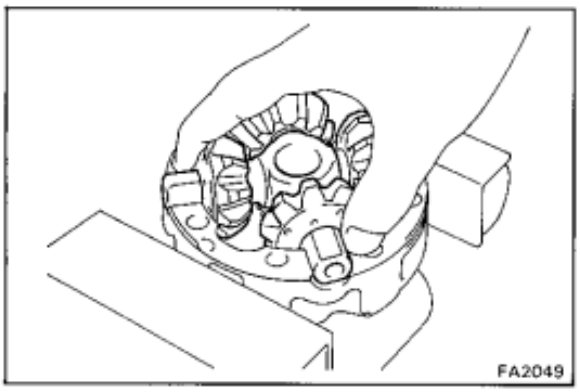

   (d) Install the four pinion gears and thrust washers to the spider.
   (e) Install the pinion gear and spider to the RH case.

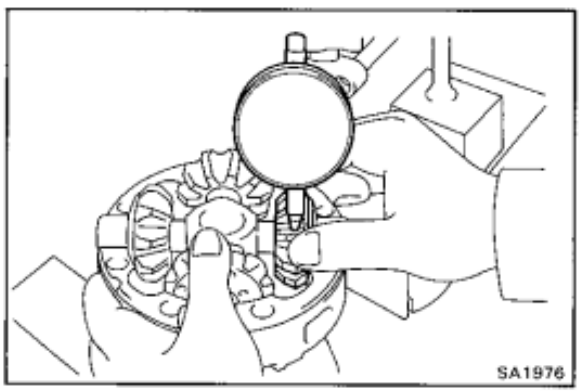

   (f) Hold the side gear and spider, measure the side gear backlash.

Standard backlash: 0.05 — 0.20 mm (0.0020 — 0.0079 in.)

HINT:
- Measure at all four locations.
- Measure the backlash at the RH case at the LH case.

If the backlash is not within specification, install a thrust washer of a different thickness.

Thrust washer thickness			mm (in.)
0.9	(0.035)	1.2	(0.047)
1.0	(0.039)	1.3	(0.051)
1.1	(0.043)		

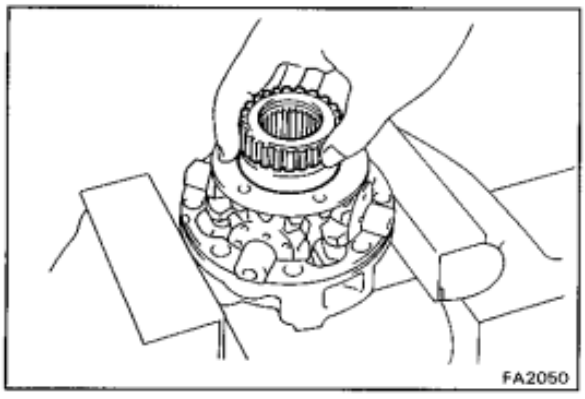

2. ASSEMBLE DIFFERENTIAL CASE

(a) Install the side gear and thrust washer to the RH case.

(b) Install the pinion gears and spider to the RH case.

(c) Install the side gear and thrust washer to the RH case.

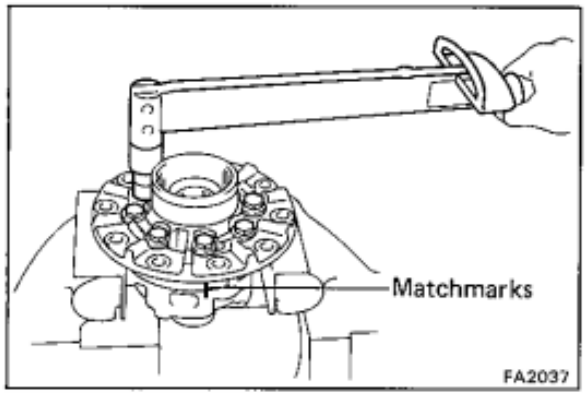

(d) Align matchmarks on the LH and RH cases.

(e) Torque the eight bolts uniformly, a little at a time.

Torque: 480 kg-cm (35 ft-lb, 47 N·m)

INSTALLATION OF DIFFERENTIAL

1. INSTALL DIFFERENTIAL CASE IN CARRIER
(See page SA-60)

2. INSTALL DIFFERENTIAL
(See page SA-54)

LEAF SPRING TYPE FRONT SUSPENSION

COMPONENTS

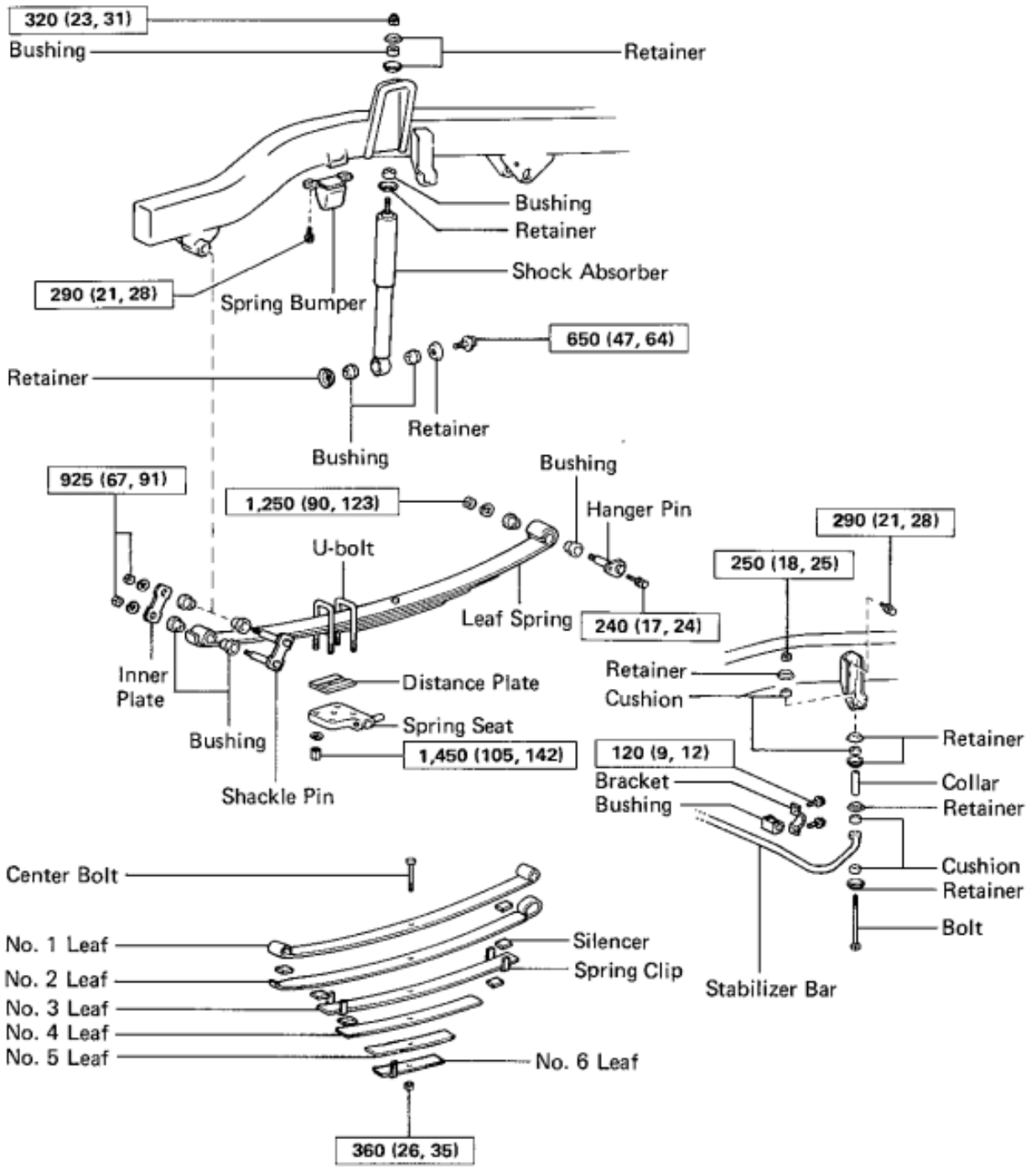

kg-cm (ft-lb, N·m) : Specified torque

◆ Non-reusable part

SA2513

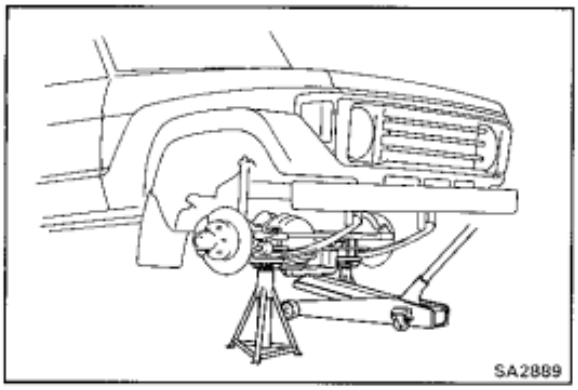
SA2889

Leaf Spring and Shock Absorber

REMOVAL OF LEAF SPRING AND SHOCK ABSORBER

(See page SA-87)

1. **JACK UP AND SUPPORT VEHICLE WITH FRAME**
   (a) Jack up and support the frame on stands.
   (b) Lower the axle housing until the leaf spring tension is free, and keep it at this position.

2. **REMOVE FRONT WHEEL**

3. **REMOVE SHOCK ABSORBER**
   (a) Remove the nut.
   (b) Disconnect the shock absorber from the frame.

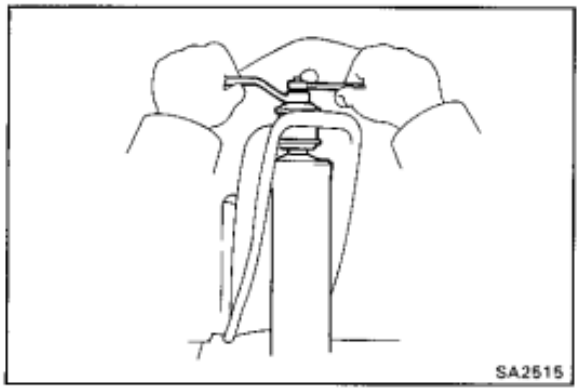
SA2515

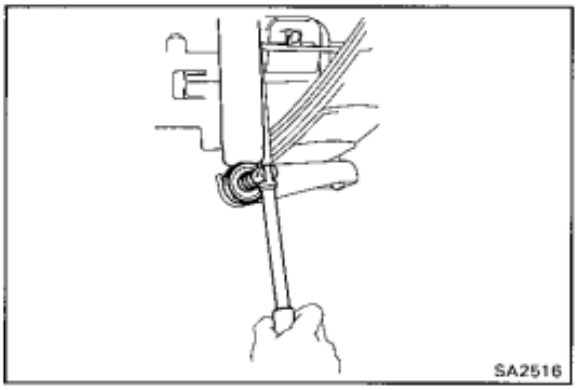
SA2516

   (c) Remove the bolt.
   (d) Remove the shock absorber from the spring seat.

4. **REMOVE U-BOLTS**
   (a) Remove the four U-bolt mounting nuts.
   (b) Remove the spring seat and distance plate.
   (c) Remove the two U-bolts.

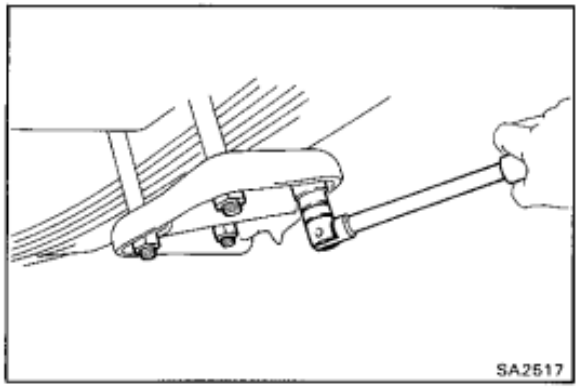
SA2517

5. **REMOVE LEAF SPRING**
   (a) Remove the hanger pin mounting nut and washer.
   (b) Remove shackle pin mounting nuts, washers and inner plate.
   (c) Remove the bolt and hanger pin.
   (d) Remove the shackle pin and leaf spring.
   (e) Remove the bushings from the leaf spring.

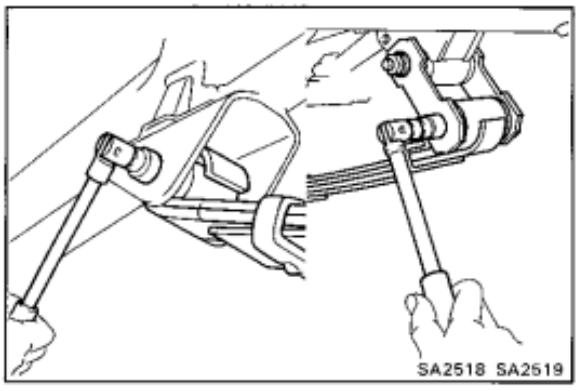
SA2518 SA2519

6. **REMOVE SPRING BUMPER**
   Remove the two bolt and the spring bumber.

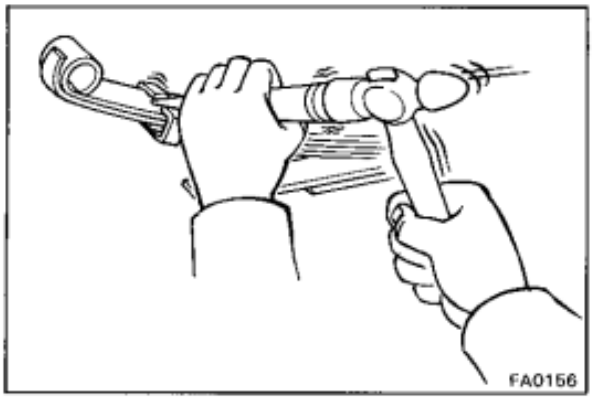

REPLACEMENT OF LEAF SPRING

(See page SA-89)

1. BEND OPEN SPRING CLIP

Using a chisel and hammer, pry out the spring clip.

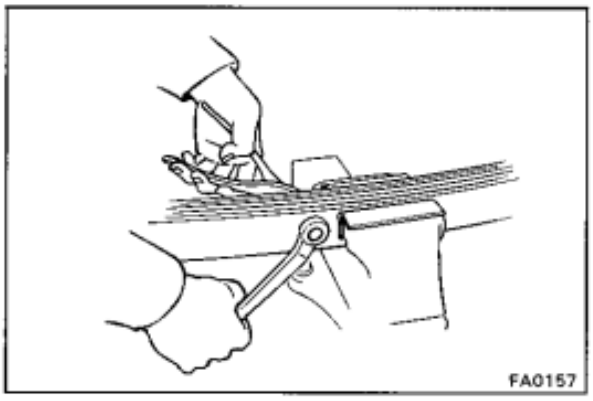

2. REMOVE CENTER BOLT

Hold the spring near the center bolt in a vise and remove the center bolt.

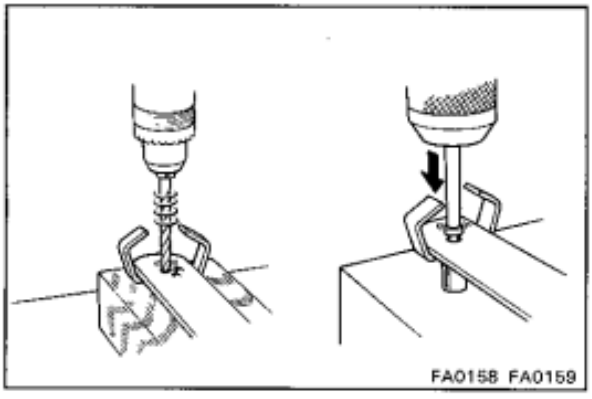

3. IF NECESSARY, REPLACE SPRING CLIP

(a) Drill off the head of the rivet and drive it out.

(c) Install a new rivet into the holes of the leaf spring and clip. Then rivet with a press.

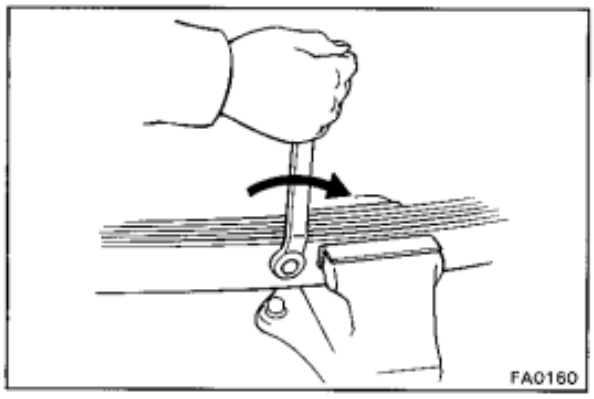

4. INSTALL SPRING CENTER BOLT

(a) Attach the spring silencer.

(b) Align the leaf holes and secure the leaves with a vise.

(c) Install and torque the spring center bolt.

Toque: 360 kg-cm (26 ft-lb, 35 N·m)

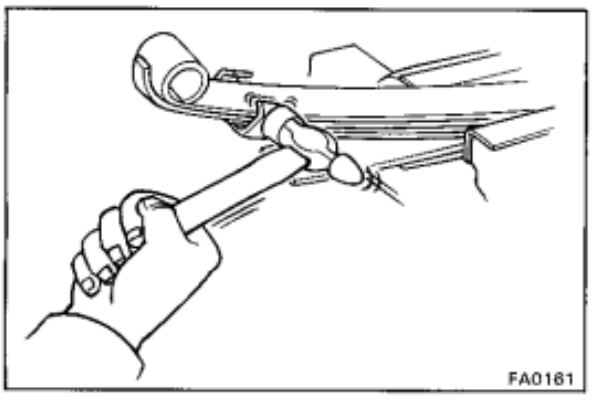

5. BEND SPRING CLIP

Using a hammer, bend the spring clip into the position.

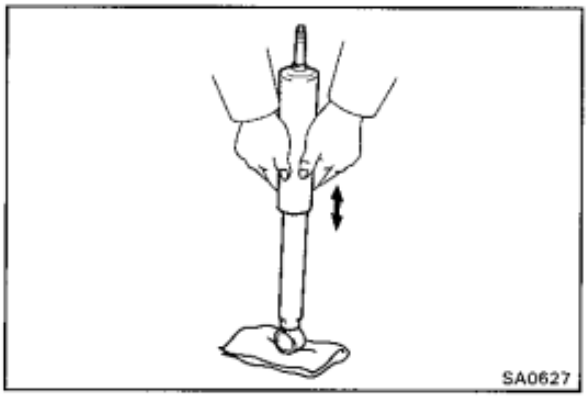

INSPECTION OF FRONT SHOCK ABSORBER

1. INSPECT OPERATION OF SHOCK ABSORBER

(a) While pushing the shock absorber, check that the pull throughout the stroke is even, and there is no abnormal resistance or noise.

(b) Push the shock absorber in fully and release it. Check that it returns at a constant speed throughout.

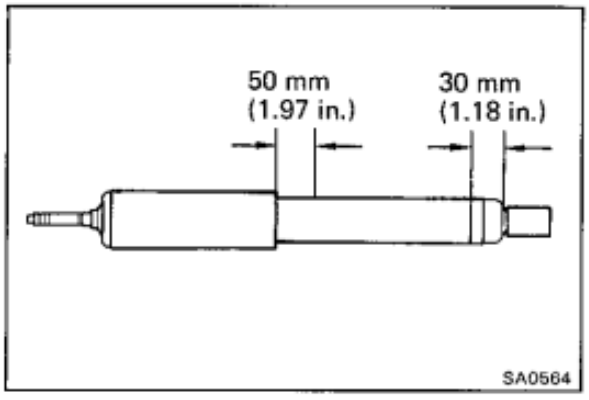

2. IN NECESSARY, DISCARD SHOCK ABSORBER

Before discarding the shock absorber, drill a hole 2 — 3 mm (0.079 — 0.118 in.) in diameter at the location shown in the illustration to release the gas inside.

NOTICE:

- **When drilling, chips may fly out, so work carefully.**
- **The gas is colorless, odorless, and non-poisonous.**

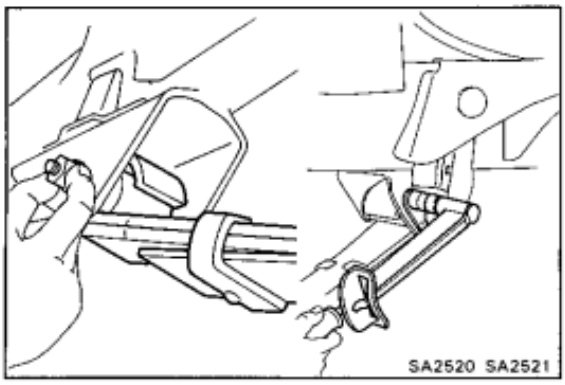
SA2520 SA2521

INSTALLATION OF LEAF SPRING

(See page SA-87)

1. INSTALL LEAF SPRING

(a) Insert the bushings into the frame and into both ends of the leaf spring.

(b) Place the leaf spring in the position.

(c) Install the hanger pin and torque the bolt.

Torque: 240 kg-cm (17 ft-lb, 24 N·m)

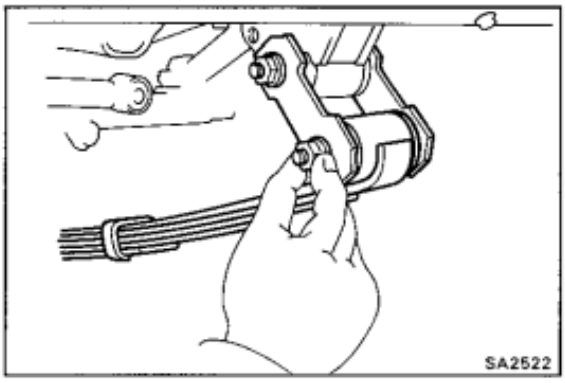
SA2522

(d) Install the shackle pin.

(e) Install the inner plate, and provisionally install the washers and nuts.

2. INSTALL SPRING BUMPER

Install the spring bumper to the frame with the two bolt.

Torque: 290 kg-cm (21 ft-lb, 28 N·m)

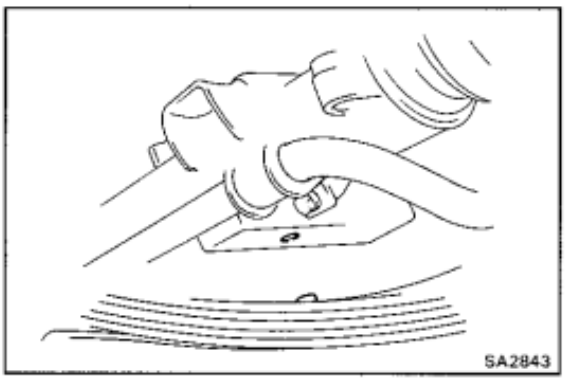
SA2843

3. INSTALL U-BOLTS

(a) Insert the head of the leaf spring center bolt into the hole in the axle housing bracket and install.

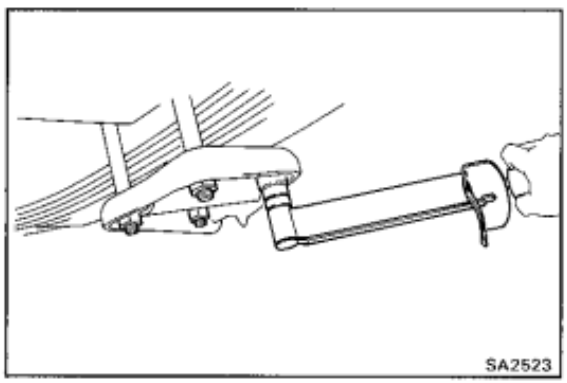
SA2523

(b) Install the two U-bolts onto the leaf springs.

(c) Install the distance plate and spring seat. Install and torque the four U-bolts mounting nuts.

Torque: 1,450 kg-cm (105 ft-lb, 142 N·m)

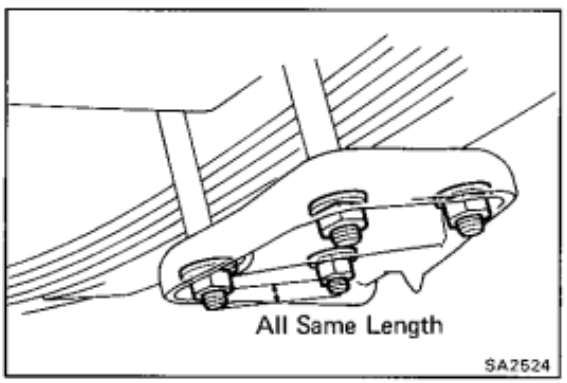

SA2524

HINT: Torque the two U-bolts so that the lengths of all the two U-bolts under the spring seat are the same.

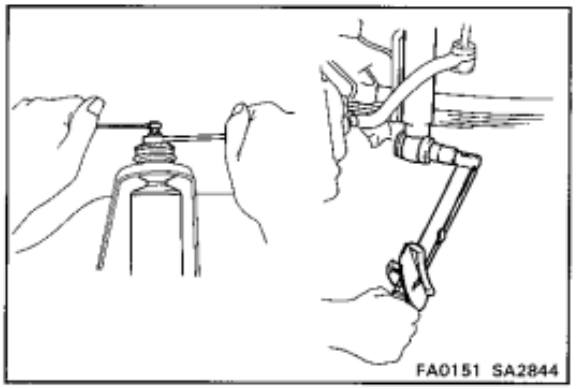

4. INSTALL SHOCK ABSORBER

(a) Position the shock absorber and install the bushings, retainers and nut.

Torque: 320 kg-cm (23 ft-lb, 31 N·m)

(b) Install the bushings, retainer and lower mounting bolt.

Torque: 650 kg-cm (47 ft-lb, 64 N·m)

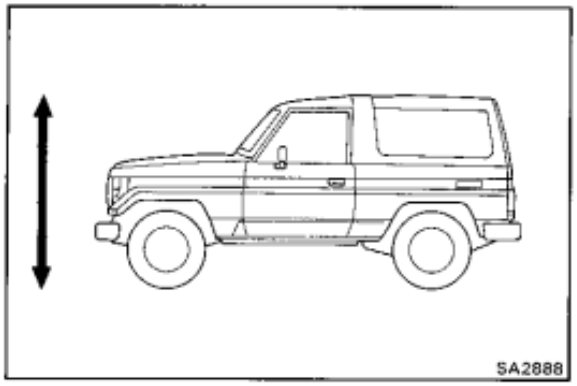

5. INSTALL FRONT WHEEL AND STABILIZE SUSPENSION

(a) Install the wheel and lower the vehicle.

(b) Bounce the vehicle up and down to stabilize the suspension.

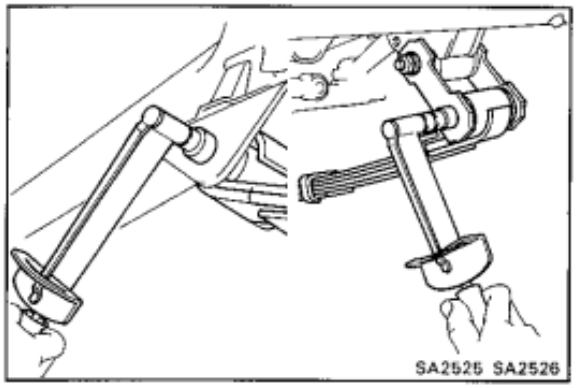

6. TORQUE HANGER PIN AND SHACKLE PIN

(a) Torque the hanger pin nut.

Torque: 1,250 kg-cm (90 ft-lb, 123 N·m)

(b) Torque the shackle pin nut.

Torque: 925 kg-cm (67 ft-lb, 91 N·m)

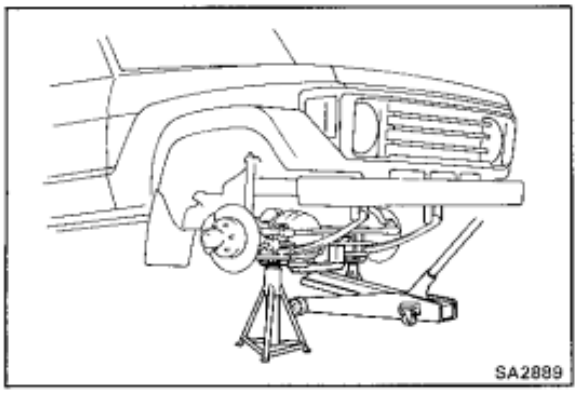

Stabilizer Bar

REMOVAL OF STABILIZER BAR

(See page SA-87)

1. **JACK UP AND SUPPORT VEHICLE**

   Jack up and support the frame on stands.

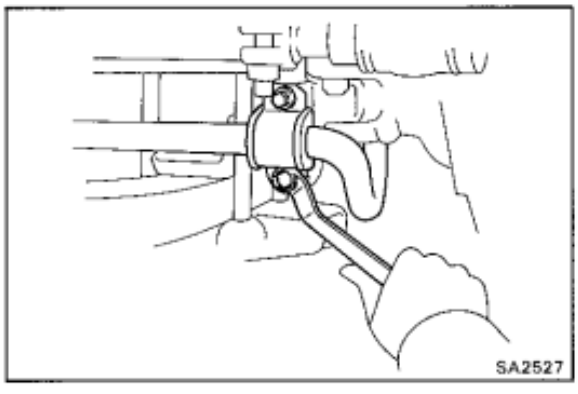

2. **REMOVE STABILIZER BAR**

   (a) Remove both side the bracket mounting bolts.

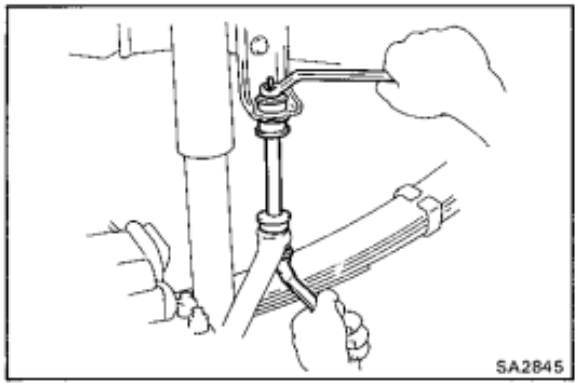

   (b) Remove both side the nuts, retainers and cushions.

   (c) Remove both side the stabilizer bar holding bolts and remove the retainers, cushions, collars and stabilizer bar.

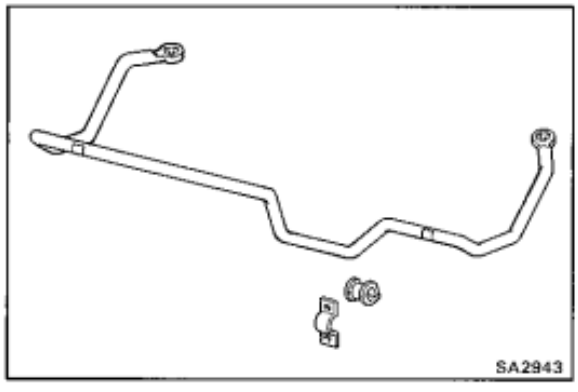

3. **REMOVE CUSHIONS AND BRACKETS**

   Remove both side the bushings and stabilizer mounting brackets from the stabilizer bar.

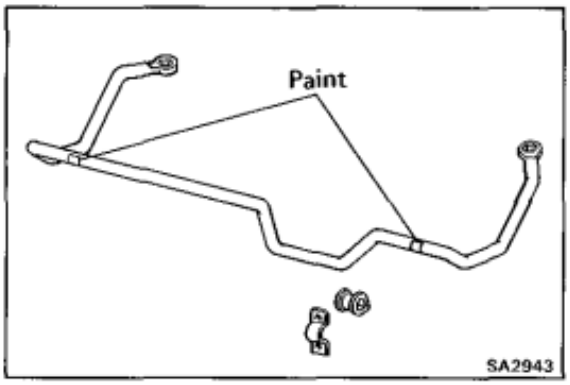

INSTALLATION OF STABILIZER BAR

(See page SA-87)

1. INSTALL STABILIZER BAR

(a) Install the cushions on the lines painted on the stabilizer bar and install the brackets onto the cushions.

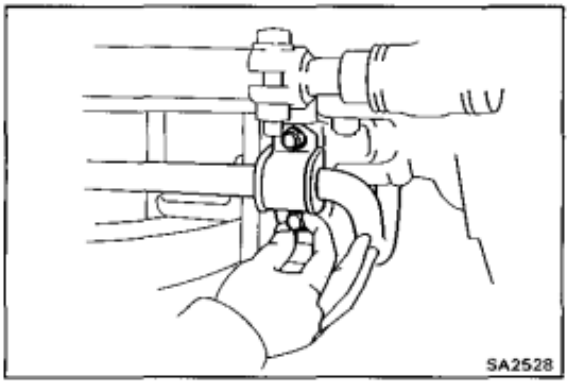

(b) Temporarily install both side the brackets to the axle housing.

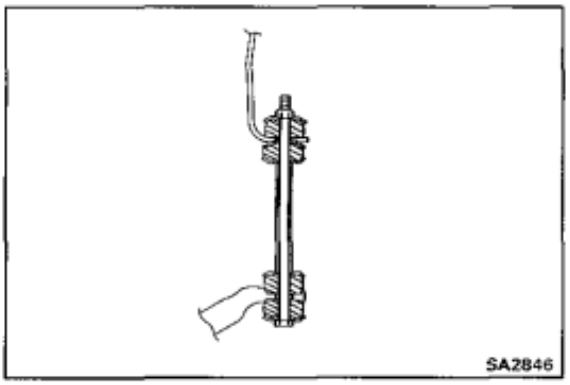

(c) Temporarily install the stabilizer bar on both sides to the frame with bolts, cushions, retainer and nuts as shown.

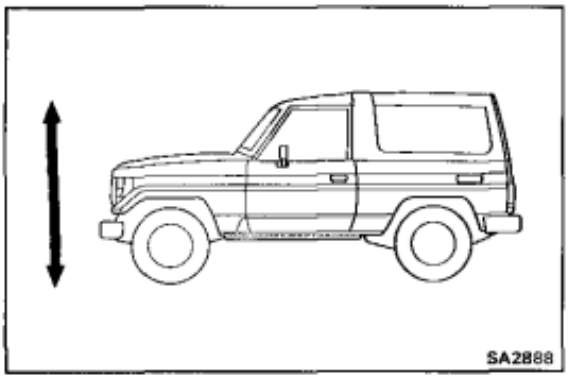

2. STABILIZE SUSPENSION

(a) Lower the vehicle.

(b) Bounce the vehicle up and down to stabilize the suspension.

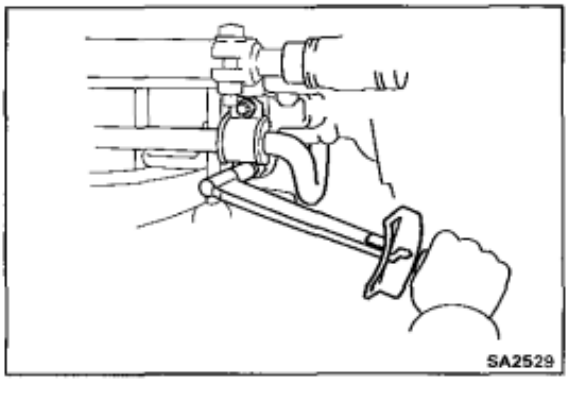

3. TORQUE BRACKET

(a) Torque the bracket bolts.

Torque: 120 kg-cm (9 ft-lb, 12 N·m)

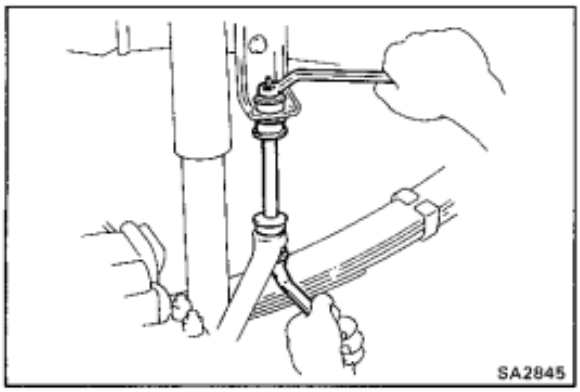

(b) Torque the nuts.

Torque: 250 kg-cm (18 ft-lb, 25 N·m)

REAR AXLE SHAFT
(Semi-Floating Type)
COMPONENTS

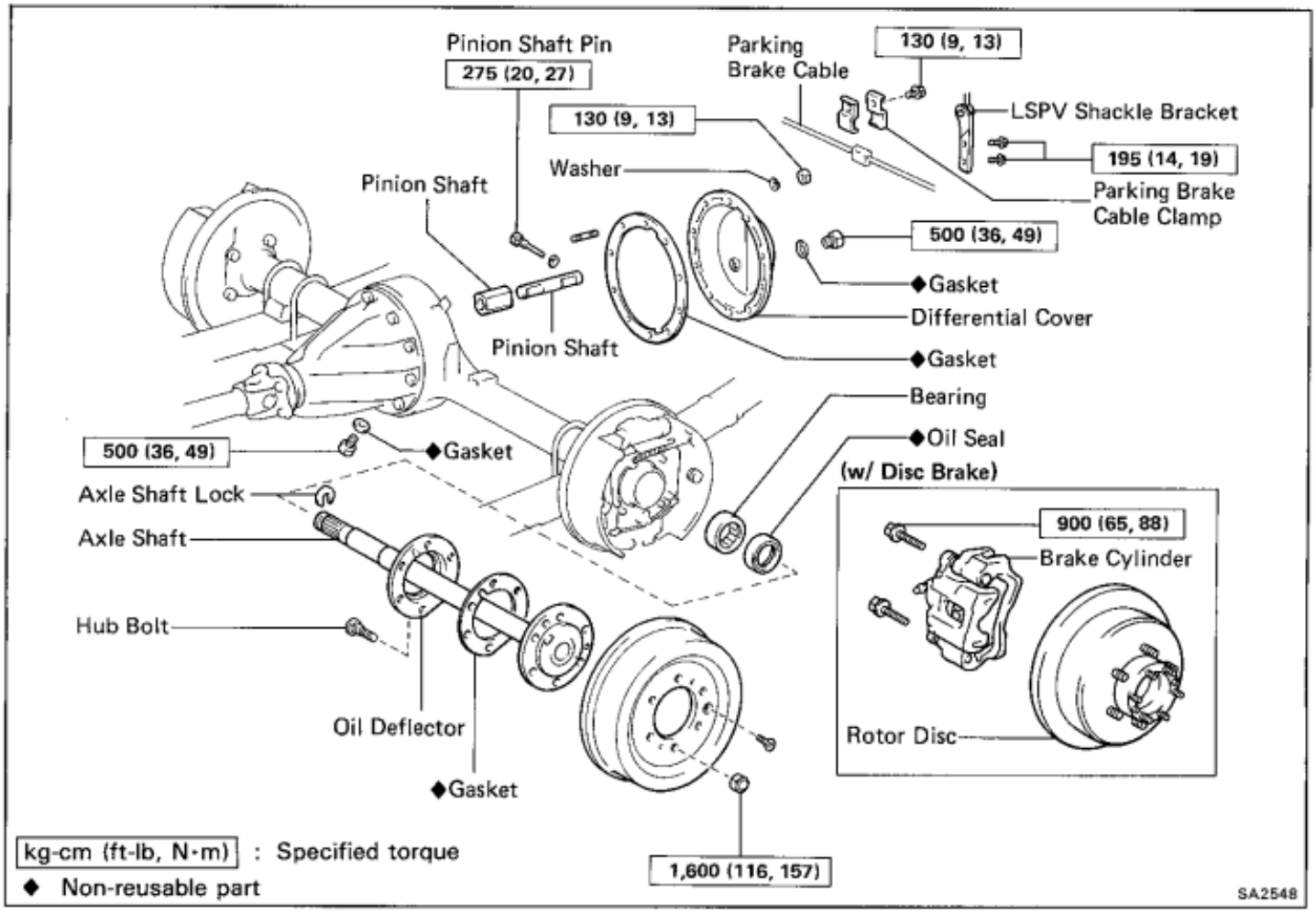

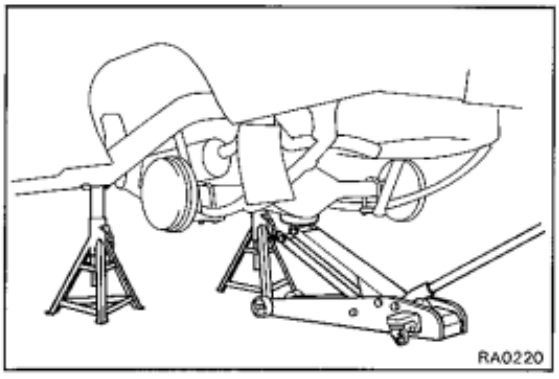

REMOVAL OF REAR AXLE SHAFT

1. JACK UP AND SUPPORT VEHICLE

(a) Jack up and support the frame on stands.

(b) Hold the rear axle housing with a jack.

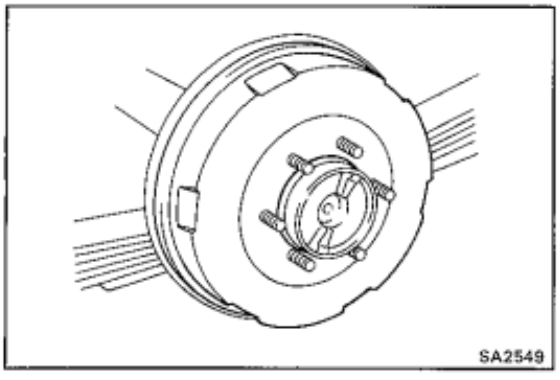

2. (w/ DRUM BRAKE)
REMOVE WHEEL AND BRAKE DRUM

(a) Remove the wheel.

(b) Remove the screw from the drum.

(c) Remove the drum from the axle hub.

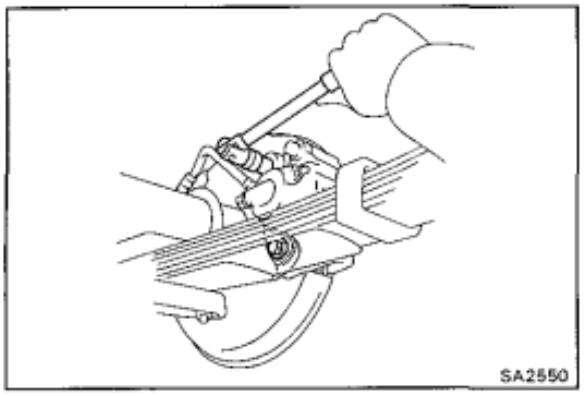

3. (w/ DISC BRAKE)
REMOVE WHEEL AND ROTOR DISC

(a) Remove the two bolts and the brake cylinder with the torque plate from the rear axle carrier.

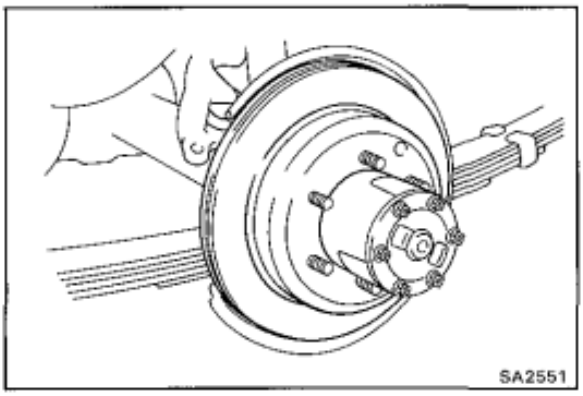

(b) Remove the rotor disc from the axle shaft.

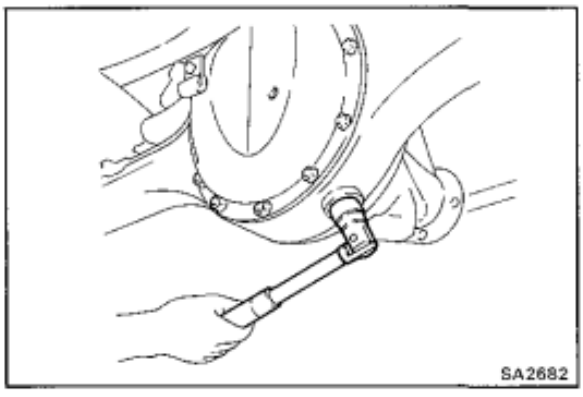

4. REMOVE DRAIN PLUG AND DRAIN DIFFERENTIAL OIL

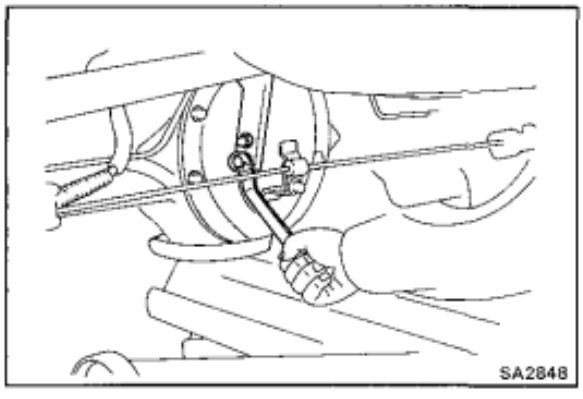

5. *REMOVE LSPV SHACKLE BRACKET*

Remove two bolts and the shackle bracket from the differential cover.

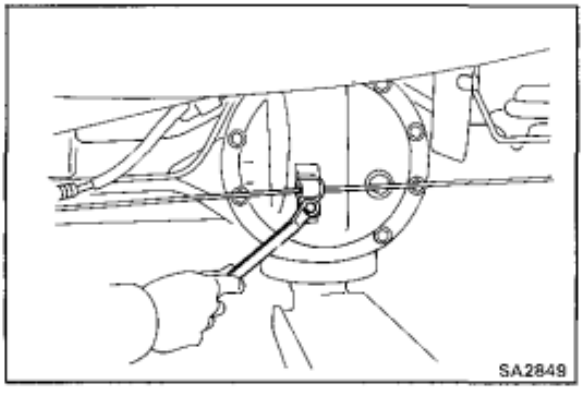

6. REMOVE PARKING BRAKE CABLE CLAMP

Remove the bolt and the clamp from the differential cover.

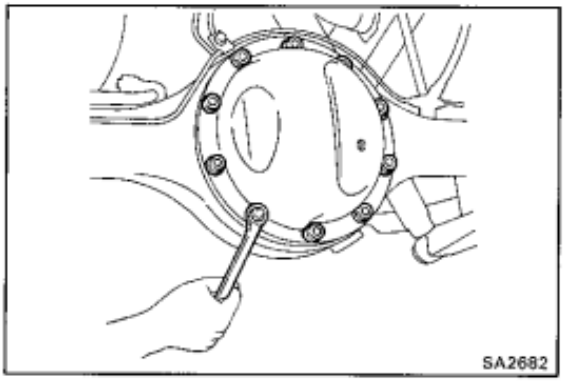

7. REMOVE DIFFERENTIAL COVER

(a) Remove the ten nuts and washers.

(b) Remove the differential cover with the gasket.

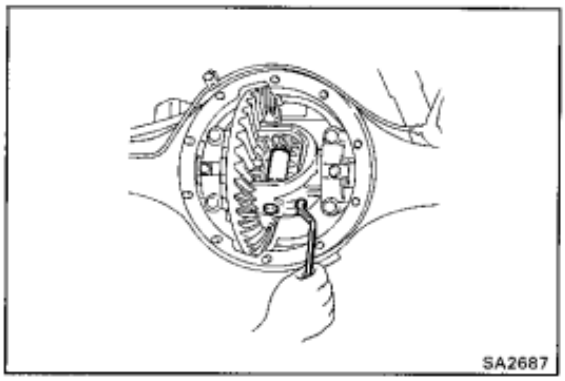

8. REMOVE PINION SHAFT AND SPACER

(a) Remove the pinion shaft pin from the differential.

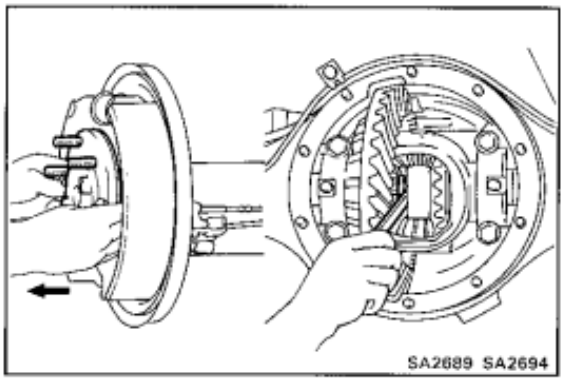

(b) Measure the thrust clearance between the axle shaft and spacer.

Maximum clearance: 0.5 mm (0.020 in.)

If necessary, select the spacer.

Spacer thickness

Thickness	mm (in.)
29.0 (1.142)	
29.4 (1.157)	
29.8 (1.173)	
30.2 (1.189)	
30.6 (1.205)	

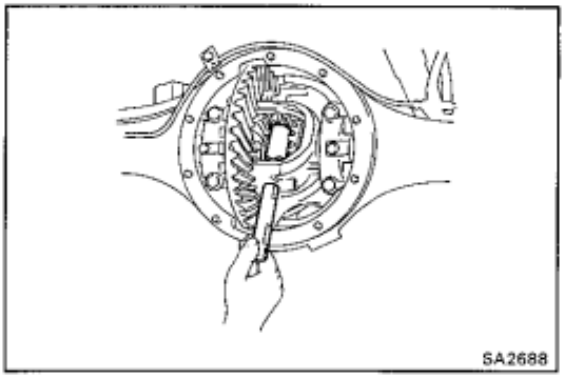

(c) Remove the pinion shaft and spacer.

HINT: When the pinion shaft is removed, the pinion gear and washer will come off also.

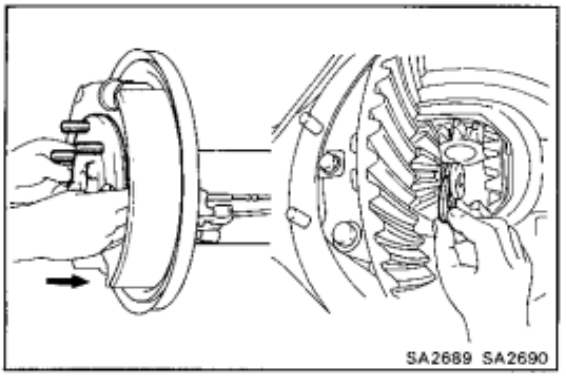

9. REMOVE AXLE SHAFT LOCK

Push the axle shaft to the differential side and remove the axle shaft lock.

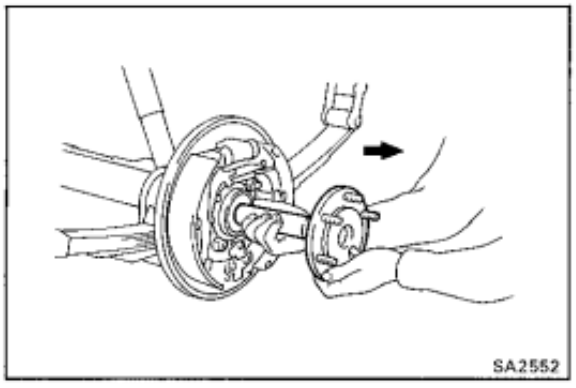

10. REMOVE AXLE SHAFT

NOTICE: When pulling out the axle shaft, be careful not to damage the oil seal.

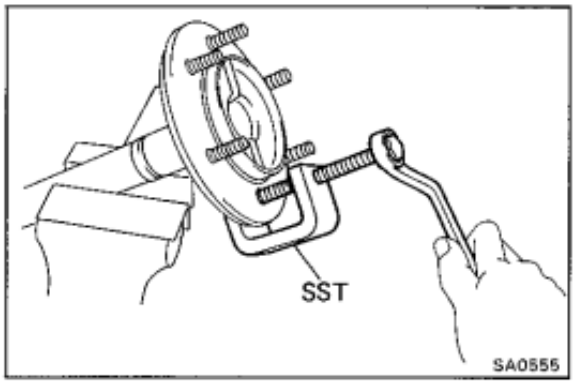

11. REMOVE HUB BOLT OIL DEFLECTOR

Using SST, remove the hub bolts, oil deflector and the gasket.

SST 09650-17011

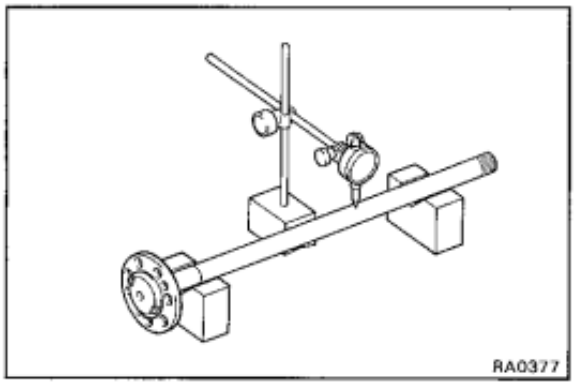

INSPECTION AND REPLACEMENT OF REAR AXLE SHAFT COMPONENTS

1. INSPECT REAR AXLE SHAFT

(a) Check for wear or damage.

(b) Check the runout of axle shaft.

Maximum runout: 0.8 mm (0.031 in.)

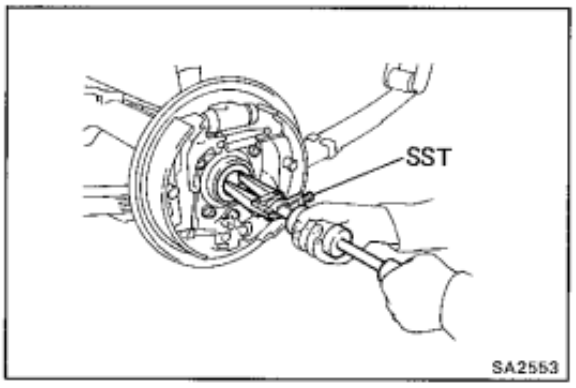

2. INSPECT OIL SEAL AND BEARING FOR WEAR OR DAMAGE

If the oil seal and bearing is damaged or worn, replace the oil seal and bearing.

3. REPLACE OIL SEAL AND BEARING

(a) Using SST, remove the oil seal.

SST 09308-00010

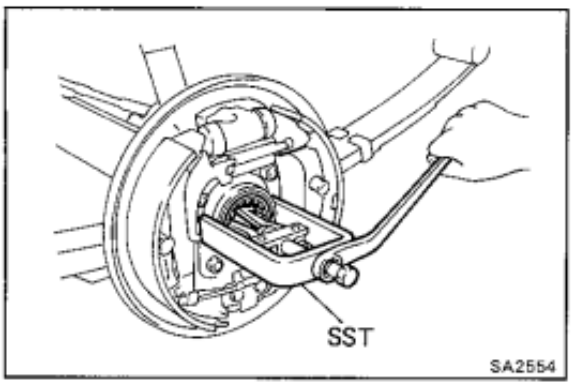

(b) Using SST, remove the bearing.

SST 09514-35011

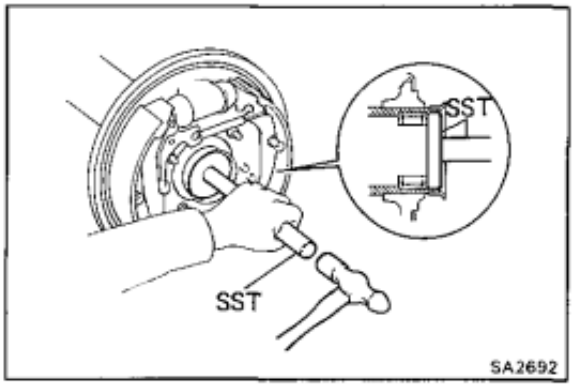

(c) Apply MP grease to the bearing.

(d) Using SST, drive in a new bearing.

SST 09608-20012 (09608-03020, 09608-03060)

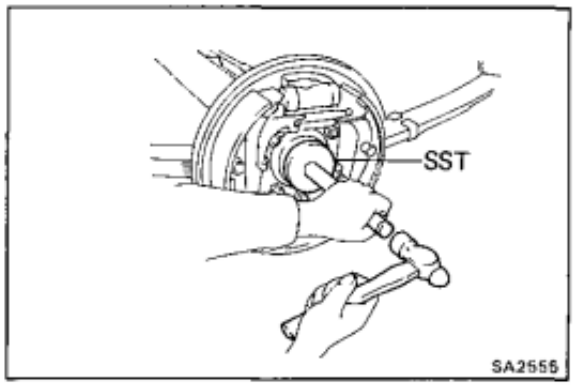

(e) Using SST, drive in a new oil seal.

SST 09608-20012 (09608-03020, 09608-03060)

(f) Apply MP grease to the oil seal lip.

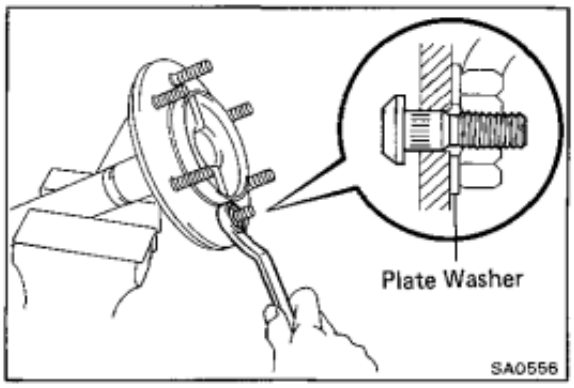

INSTALLATION OF REAR AXLE SHAFT

(See page SA-108)

1. INSTALL OIL DEFLECTOR AND HUB BOLT

(a) Install a new gasket and the oil deflector.

(b) Install the plate washer on the hub bolt as shown, in the illustration then tighten the nut to install the hub bolts.

(c) Remove the nut.

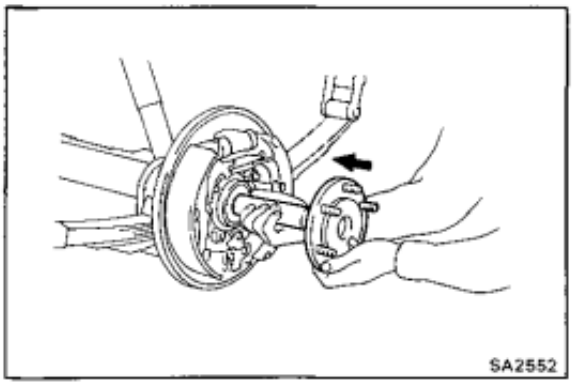

2. INSTALL REAR AXLE SHAFT IN AXLE HOUSING

Insert the axle shaft into the housing.

NOTICE: When inserting the axle shaft, be careful not to damage the oil seal.

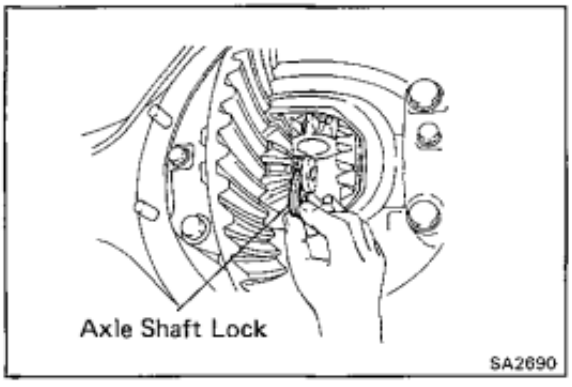

3. INSTALL AXLE SHAFT LOCK

(a) Install the axle shaft lock to axle shaft.

(b) Pull the axle shaft fully toward the outer side of the vehicle.

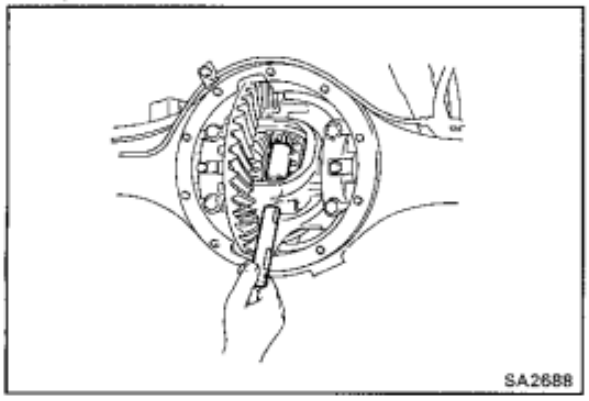
SA2688

4. INSTALL PINION SHAFT AND PINION SHAFT SPACER

(a) Install the spacer and the pinion shaft to the differential.

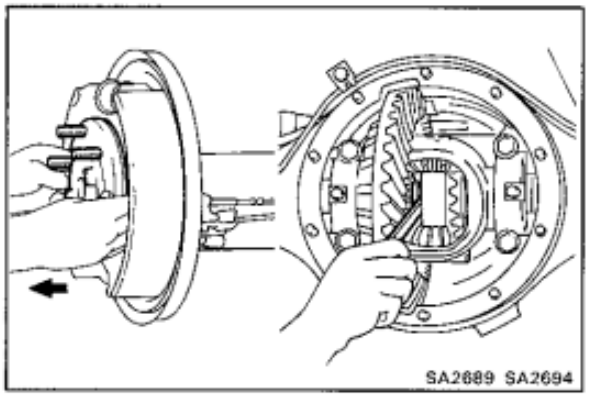
SA2689 SA2694

(b) Pull the axle shaft to outside.

(c) Measure the thrust clearance between the axle shaft and spacer.

Maximum clearance: 0.5 mm (0.020 in.)

If necessary, select the spacer.

Spacer thickness

Thickness mm (in.)
29.0 (1.142)
29.4 (1.157)
29.8 (1.173)
30.2 (1.189)
30.6 (1.205)

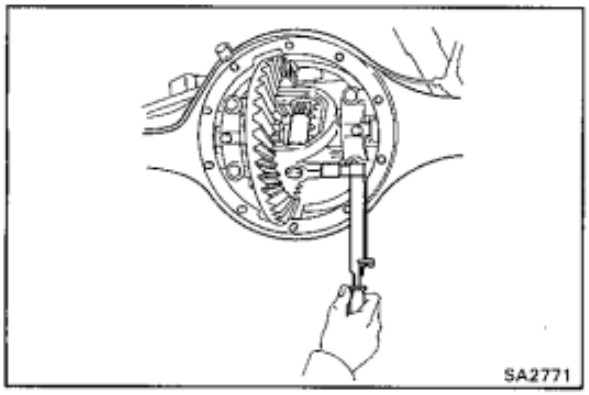
SA2771

(d) Install the pinion shaft pin.

Torque: 275 kg-cm (20 ft-lb, 27 N·m)

5. INSTALL DIFFERENTIAL COVER

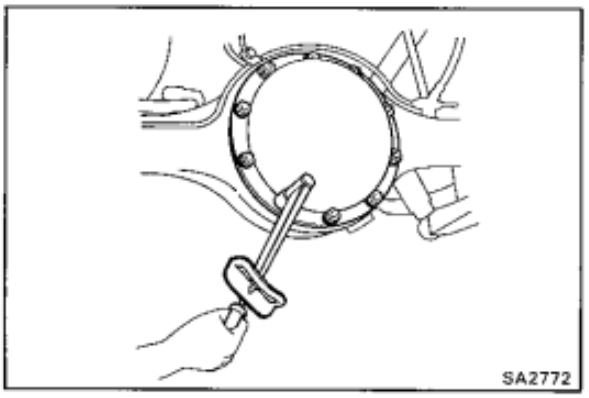
SA2772

(a) Install a new gasket and differential cover to the axle housing.

(b) Install the ten washer and nuts.

Torque: 130 kg-cm (9 ft-lb, 13 N·m)

6. INSTALL PARKING BRAKE CABLE CLAMP

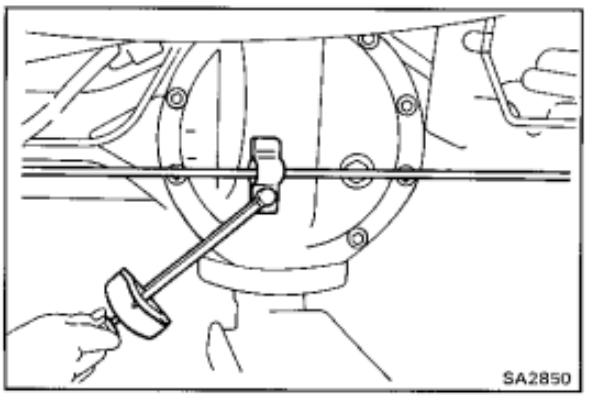
SA2850

Install the clamp of parking brake cable to the differential cover with the bolt.

Torque: 130 kg-cm (9 ft-lb, 13 N·m)

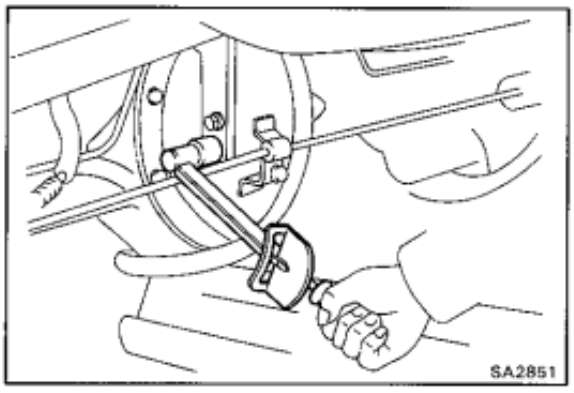

7. INSTALL LSPV SHACKLE BRACKET

Install the shackle bracket to differential cover with the two bolts.

Torque: 195 kg-cm (14 ft-lb, 19 N·m)

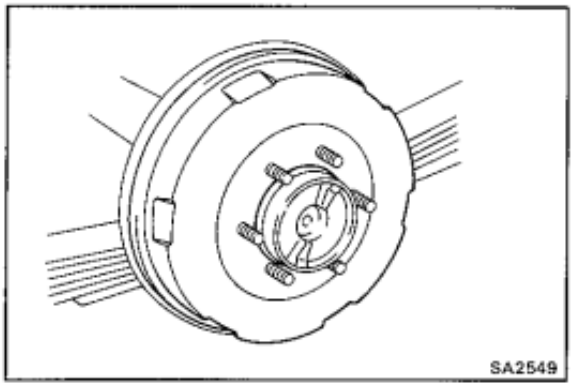

8. (w/ DRUM BRAKE)
INSTALL BRAKE DRUM AND WHEEL

(a) Install the drum to the axle shaft.

(b) Install the screw to the drum.

(c) Install the wheel.

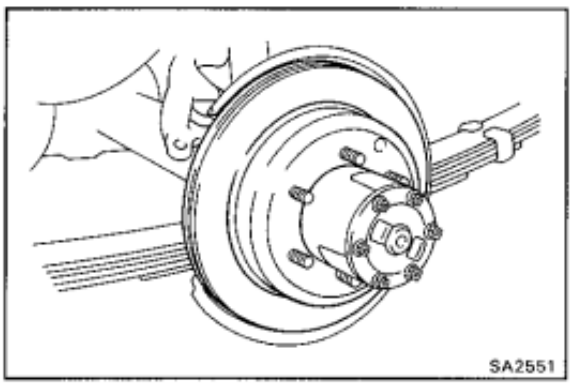

9. (w/ DISC BRAKE)
INSTALL ROTOR DISC AND WHEEL

(a) Install the rotor disc to the axle shaft.

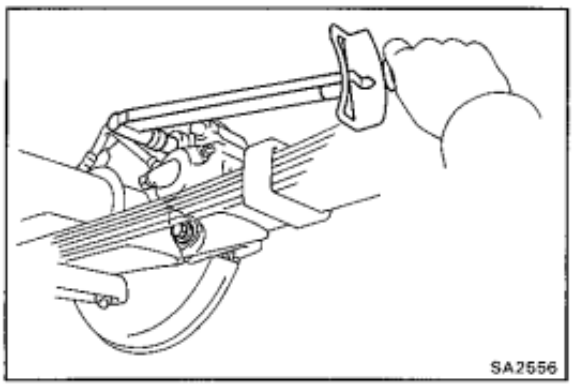

(b) Install the brake cylinder with the torque plate to the rear axle carrier with the two bolts.

Torque: 900 kg-cm (65 ft-lb, 88 N·m)

(c) Install the wheel.

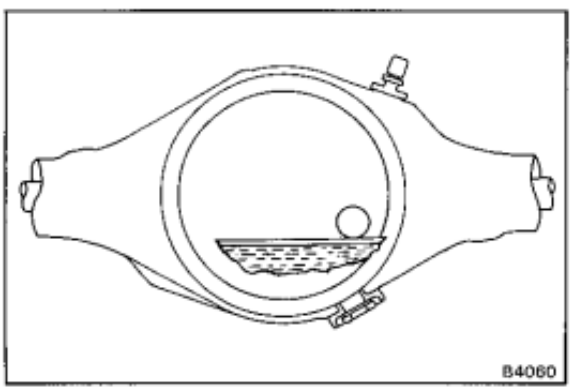

10. FILL DIFFERENTIAL WITH GEAR OIL

Oil type: API GL-5

Viscosity: Above −18°C (0°F) SAE 90
Below −18°C (0°F) SAE 80W or 80W-90

Capacity: 2.5 liters (2.6 US qts, 2.2 Imp. qts)

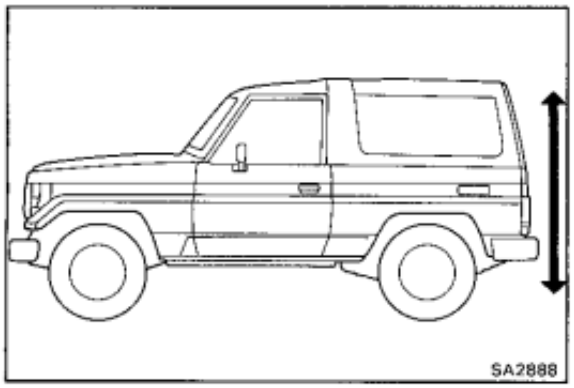

11. LOWER VEHICLE

(a) Lower the vehicle.

(b) Bounce the vehicle up and down to stabilize the suspension.

REPLACEMENT OF REAR HUB BOLT

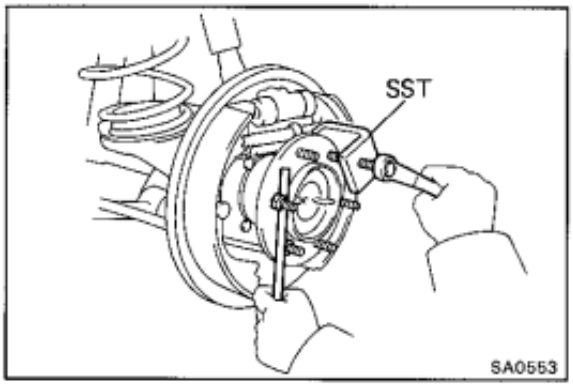

1. JACK UP SUPPORT VEHICLE

2. REMOVE REAR WHEEL AND BRAKE DRUM OR DISC ROTOR

3. REMOVE HUB BOLT

Using SST, remove the hub bolts.

SST 09650-17011

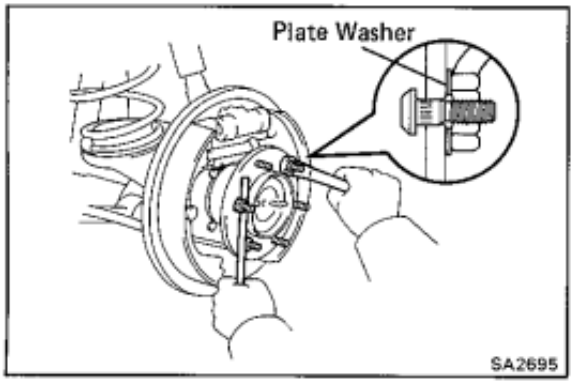

4. INSTALL HUB BOLT

Hold the axle shaft, using washers and nuts, install new hub bolts.

5. INSTALL BRAKE DRUM OR DISC ROTOR AND REAR WHEEL

6. LOWER VEHICLE

REAR AXLE SHAFT AND AXLE HUB
(Full-Floating Type)
COMPONENTS

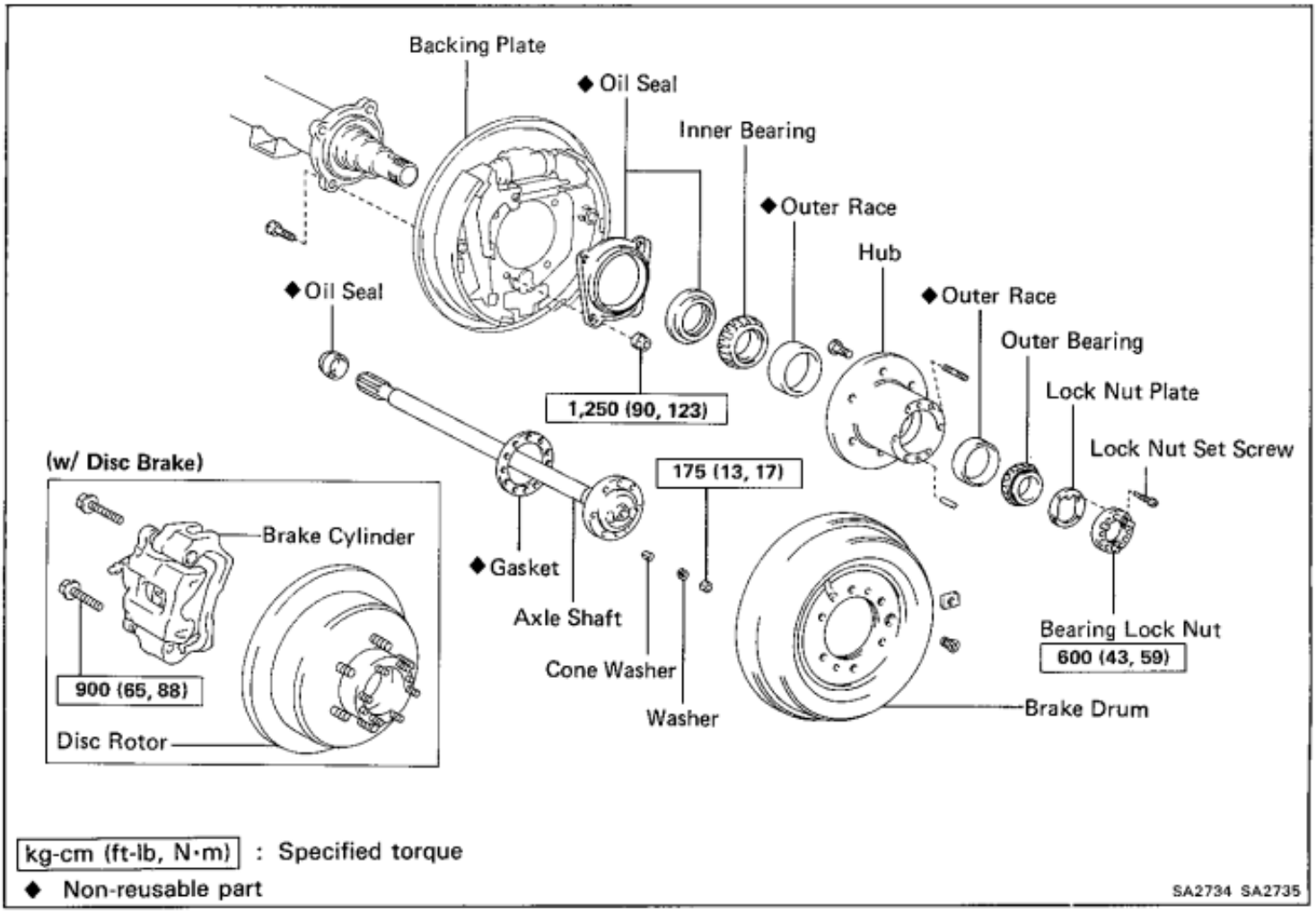

REMOVAL OF REAR AXLE SHAFT

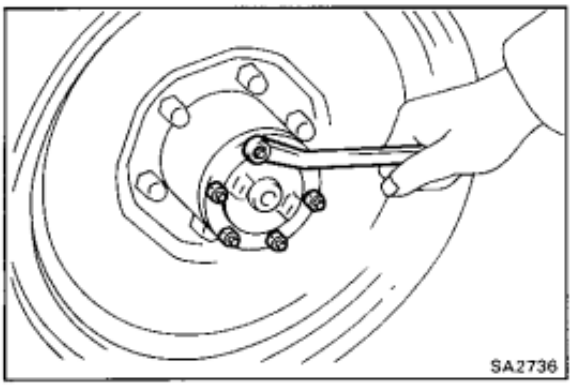

1. REMOVE AXLE SHAFT SET NUT

Remove the six set nuts and washers.

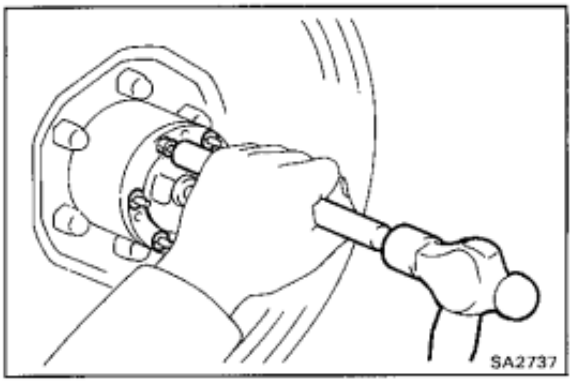

2. REMOVE CONE WASHER

Using a hammer and brass bar, drive on the bolt and remove the six cone washers.

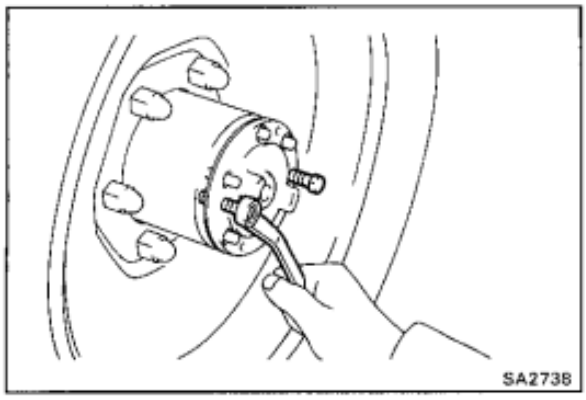

3. **REMOVE REAR AXLE SHAFT**

(a) Install the two service bolts to the service hole and tighten them.

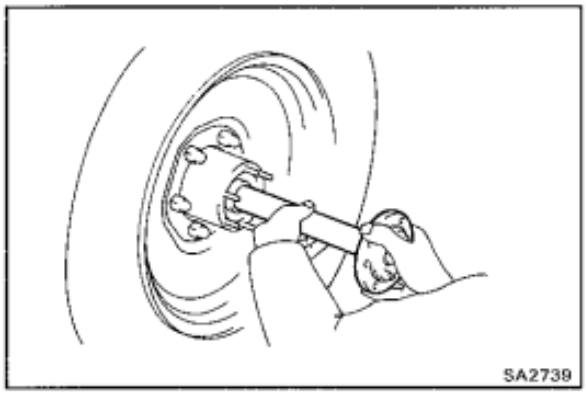

(b) Remove the axle shaft with the gasket.

NOTICE: When pulling out the axle shaft, be careful not to damage the oil seal.

(c) Remove the two bolts from the axle shaft.

INSPECTION OF REAR AXLE SHAFT COMPONENTS

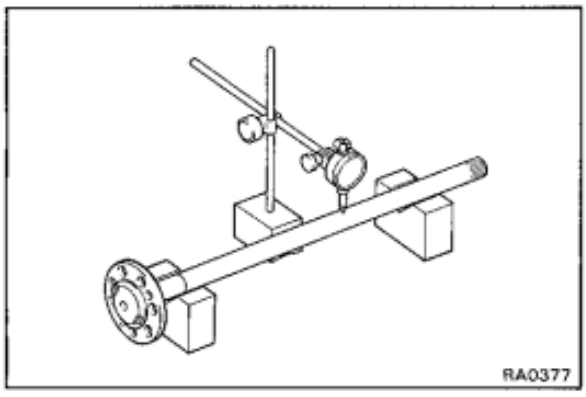

1. **INSPECT REAR AXLE SHAFT**

Check the axle shaft for wear or damage.

Limit runout: 0.8 mm (0.031 in.)

If the rear axle shaft is damaged or worn, or if runout is greater than maximum, replace the rear axle shaft.

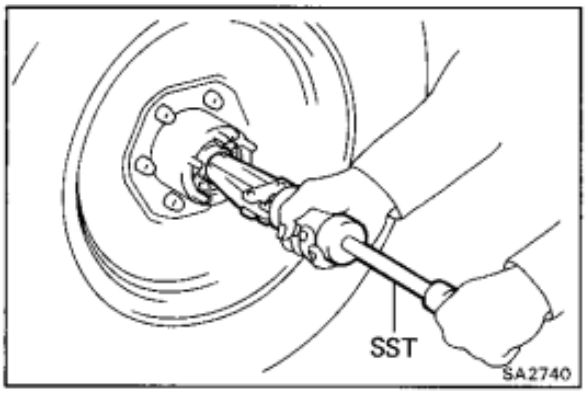

2. **INSPECT OIL SEAL FOR WEAR OR DAMAGE**

If the oil seal is damaged or worn, replace it.

3. **IF NECESSARY, REPLACE OIL SEAL**

(a) Using SST, drive out the oil seal.

SST 09308-00010

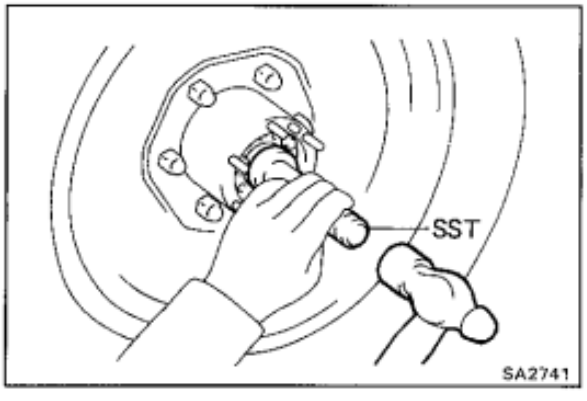

(b) Using SST, drive in a new oil seal.

SST 09517-36010

(c) Apply MP grease to the oil seal lip.

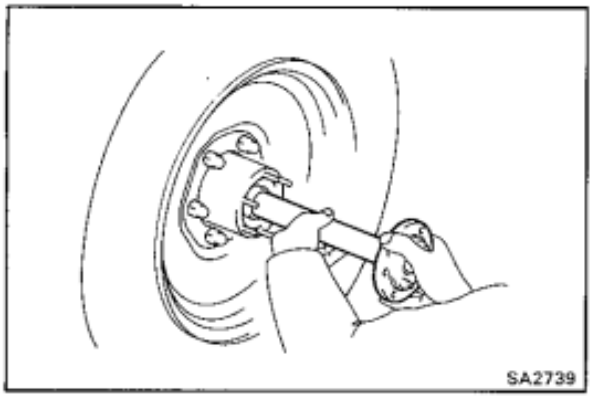

INSTALLATION OF REAR AXLE SHAFT

(See page SA-116)

1. **APPLY MP GREASE TO OIL SEAL LIP**

2. **INSTALL NEW GASKET AND INSERT AXLE SHAFT**

   NOTICE: When inserting the axle shaft, be careful not to damage the oil seal.

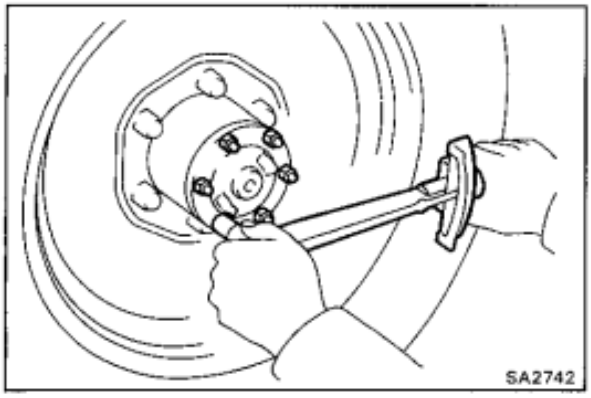

3. **INSTALL CONE WASHER AND SET NUT**

   Install the cone washers and spring washers and the six nuts. Torque the nuts.

   Torque: 340 kg-cm (25 ft-lb, 33 N·m)

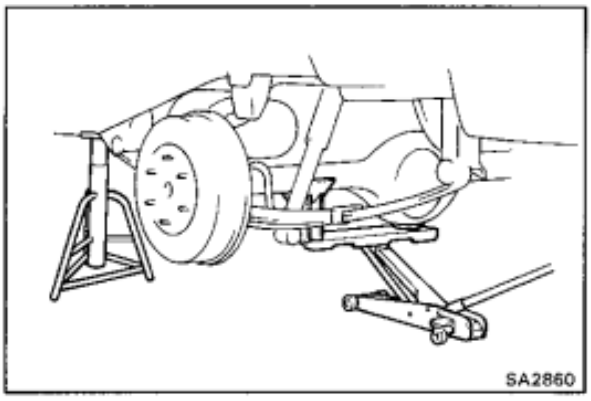

REMOVAL OF REAR AXLE SHAFT

(See page SA-116)

1. **JACK UP VEHICLE AND REMOVE WHEEL**

2. **REMOVE REAR AXLE SHAFT**
   (See page SA-116)

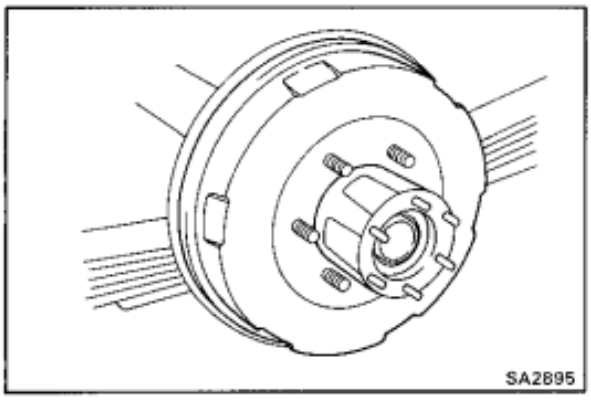

3. **(w/ DRUM BRAKE)**
   REMOVE BRAKE DRUM

   (a) Remove the screw from the brake drum.

   (b) Remove the brake drum from the axle hub.

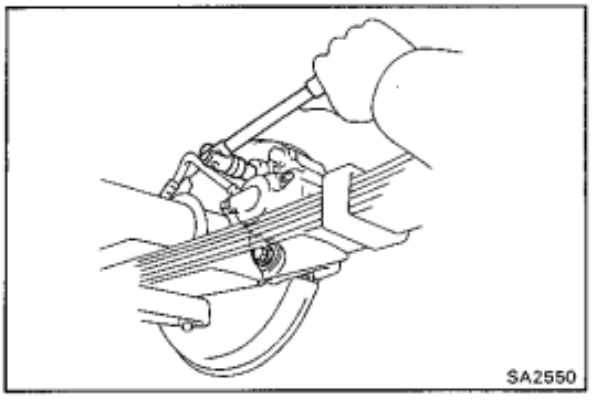

4. **(w/ DISC BRAKE)**
   REMOVE ROTOR DISC

   (a) Remove the two bolts and the brake cylinder with torque plate from the rear axle carrier.

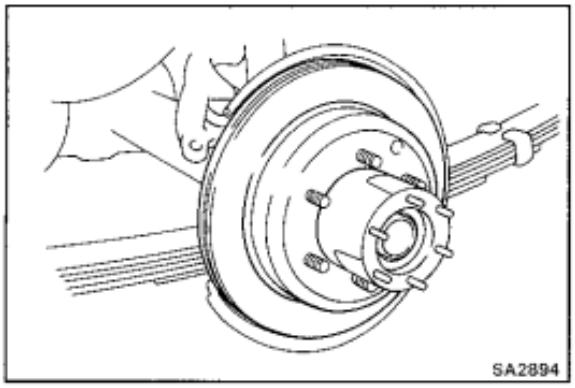

(b) Remove the rotor disc from the axle hub.

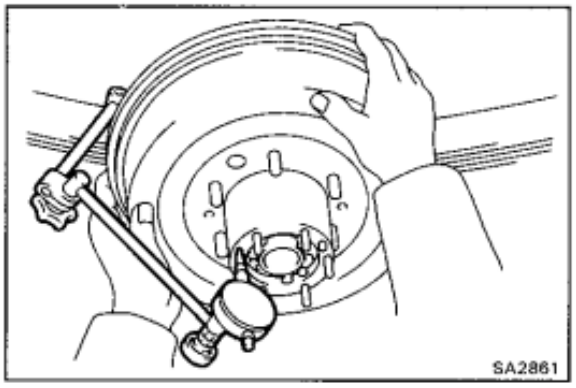

5. REMOVE BEARING LOCK NUT

(a) Check the movement of the drum or disc rotor.

(b) Check the hub axial play.

Hub axial play: Less than 0.1 mm (0.004 in.)

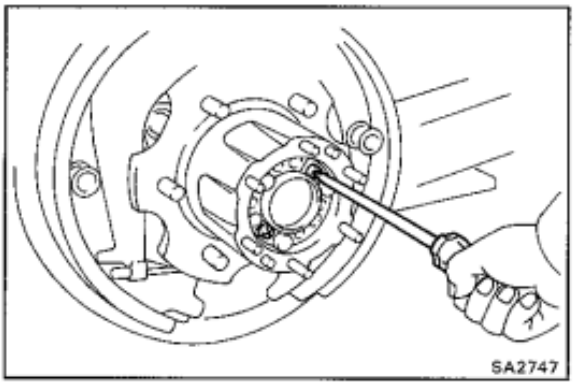

(c) Remove the two lock nut set screws.

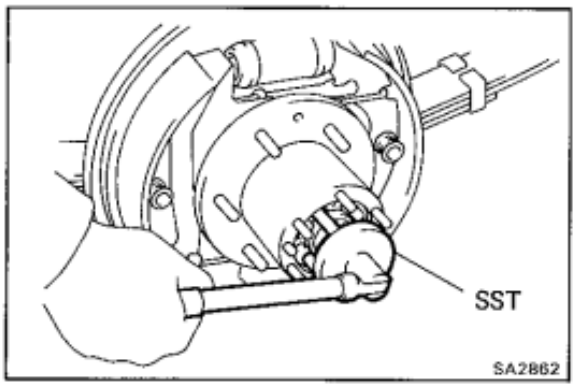

(d) Using SST, remove the lock nut.

SST 09509-25011

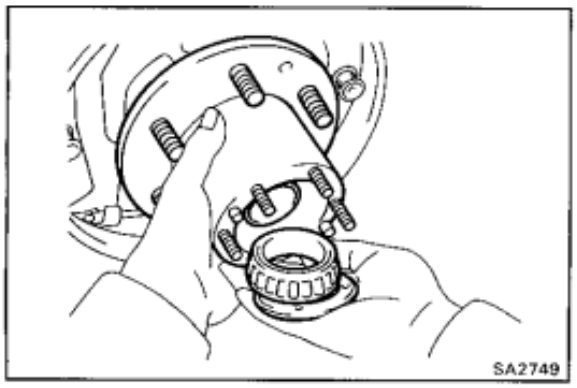

6. REMOVE REAR AXLE HUB

Remove the axle hub with the lock nut plate and outer bearing.

7. REMOVE BACKING PLATE AND OIL SEAL

Remove the four nuts and remove the oil seal and backing plate.

INSPECTION AND REPLACEMENT OF AXLE HUB COMPONENTS

1. INSPECT AXLE HOUSING

Using a magnetic flaw detector or flaw detecting penetrant, check for damage or cracks.

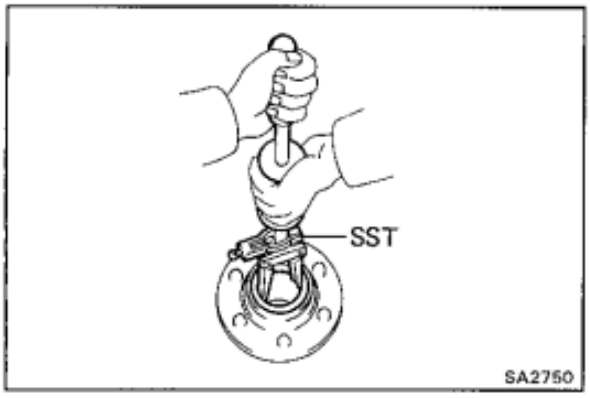

2. REMOVE OIL SEAL AND INNER BEARING

(a) Using SST, remove the oil seal.

SST 09308-00010

Remove the inner bearing from the axle hub.

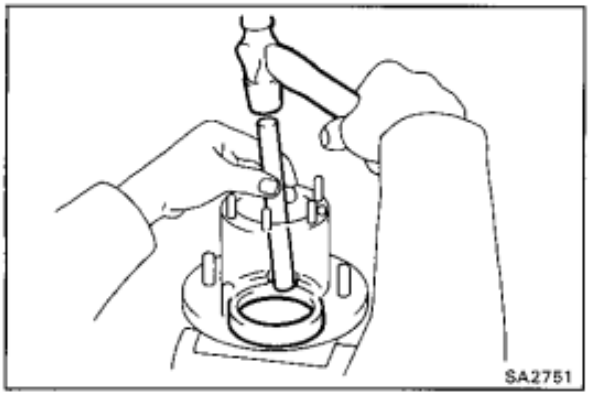

3. REMOVE BEARING OUTER RACE

Using a hammer and brass bar, drive out the bearing outer race from the axle hub.

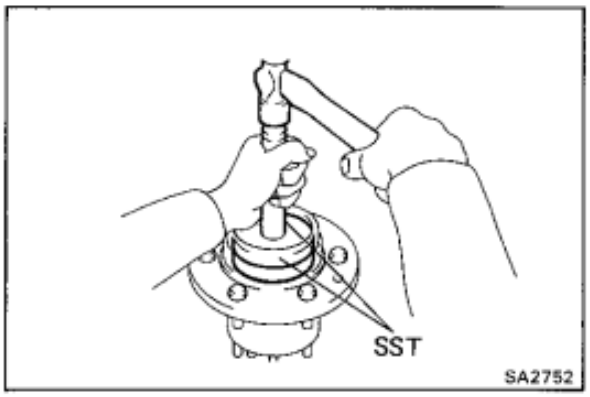

4. INSTALL BEARING OUTER RACE

Using SST and hammer, drive in the bearing outer race to the axle hub.

SST 09608-35014 (09608-06020, 09608-06200)

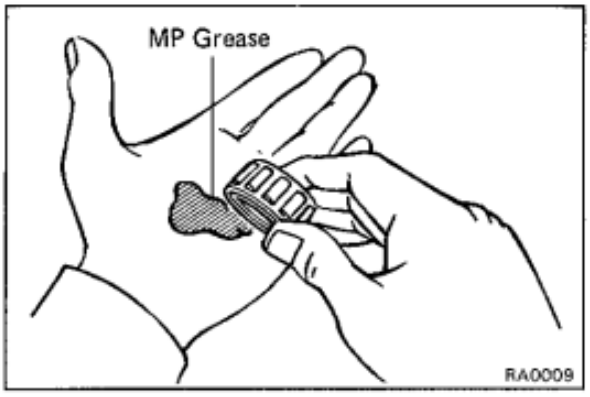

5. COAT BEARING WITH MP GREASE

(a) Place MP grease in the palm of your hand.

(b) Pack grease into the bearing, continuing until the grease oozes out from the other side.

(c) Do the same around the bearing circumference.

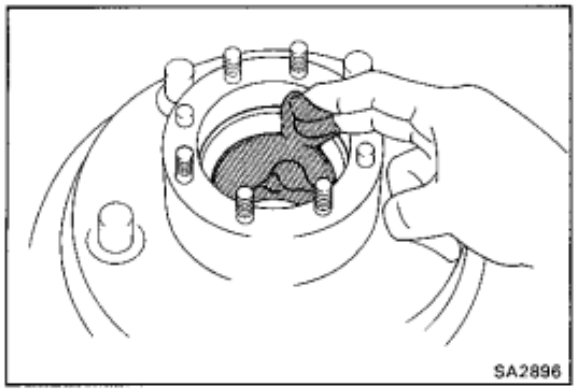

6. COAT INSIDE OF HUB WITH MP GREASE

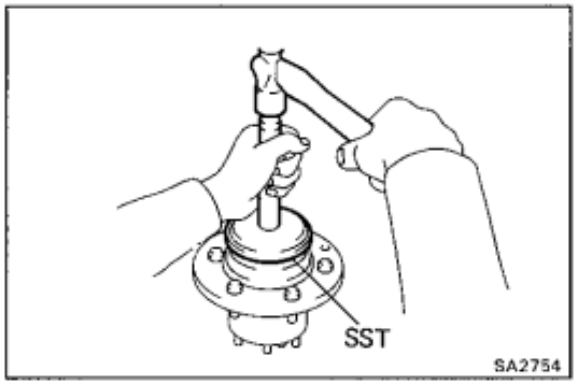

7. INSTALL INNER BEARING AND OIL SEAL

(a) Install the inner bearing to the axle hub.

(b) Using SST and a hammer, drive in the oil seal to the axle hub.

SST 09608-35014 (09608-06020, 09608-06210)

(c) Coat MP grease to the oil seal lip.

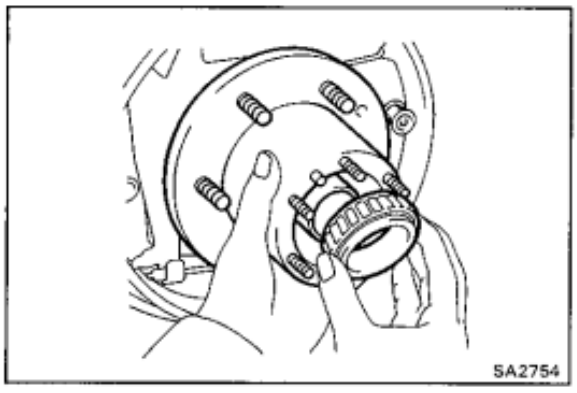

INSTALLATION OF REAR AXLE HUB

(See page SA-116)

1. INSTALL AXLE HUB

(a) Install the backing plate and oil seal to the axle housing with the four bolts and nuts.

(b) Install the axle hub to the axle housing.

NOTICE: Be careful not to damage the oil seal.

(c) Install the outer bearing.

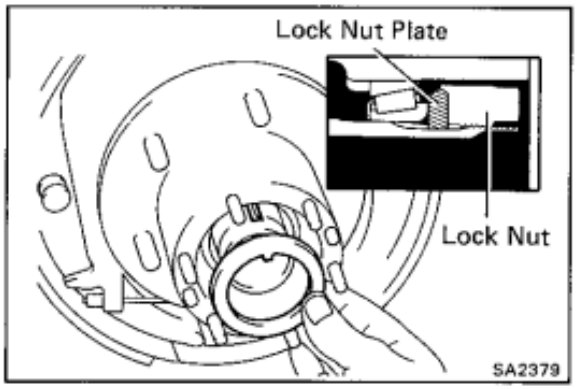

2. INSTALL LOCK NUT PLATE AND BEARING LOCK NUT

(a) After fully pushing in the outer bearing, position the protrusion of the lock nut plate into the axle housing groove.

(b) Temporarily install the bearing lock nut.

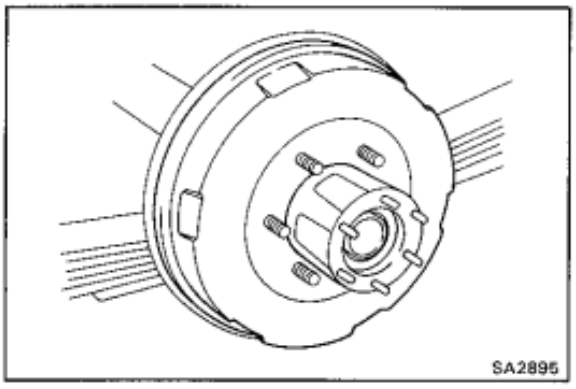

3. (w/ DRUM BRAKE TYPE) INSTALL BRAKE DRUM

(a) Install the brake drum to the axle hub.

(b) Install the screw to the brake drum.

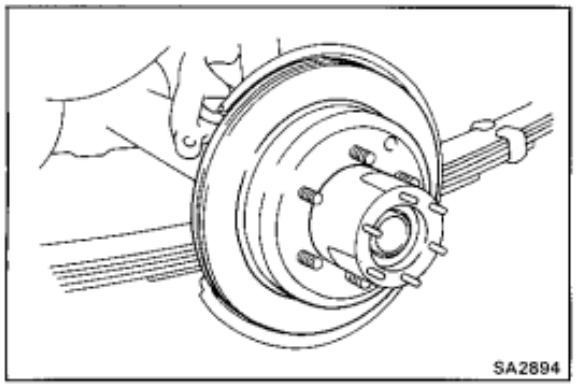

4. (w/ DISC BRAKE TYPE) INSTALL ROTOR DISC

(a) Install the rotor disc to the axle hub.

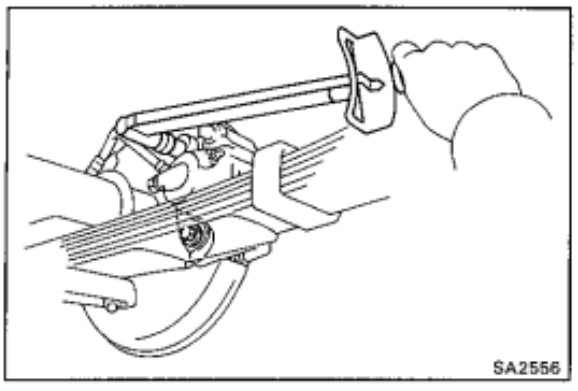

(b) Install the brake cylinder with torque plate to the dust cover with the two bolts.

Torque: 900 kg-cm (65 ft-lb, 88 N·m)

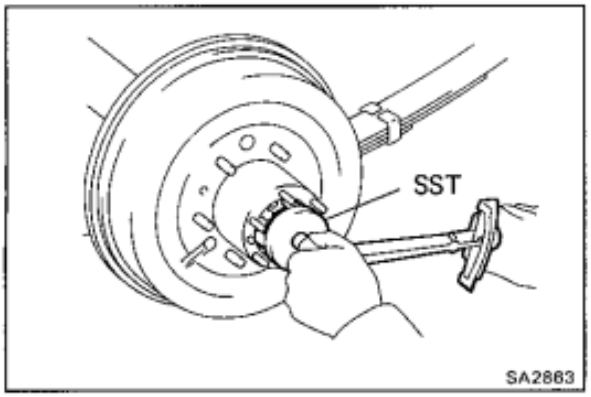

5. **ADJUST PRELOAD**

(a) Using SST, torque the bearing lock nut.

SST 09509-25011

Torque: 600 kg-cm (43 ft-lb, 59 N·m)

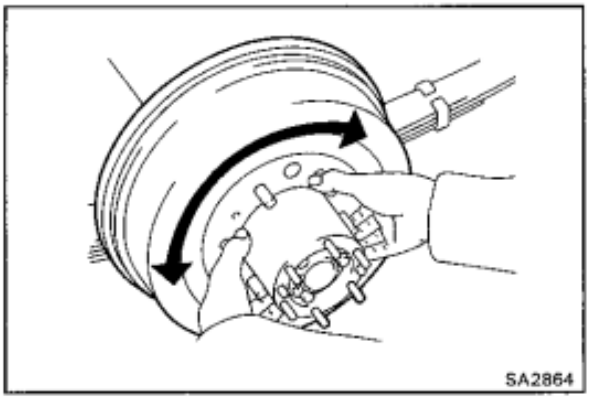

(b) Snug down the bearing by turning the hub several times.

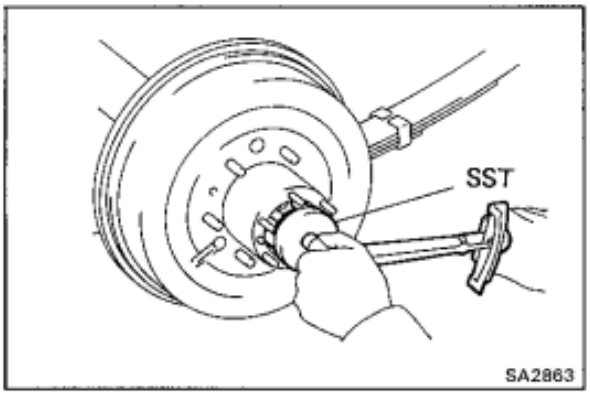

(c) Using SST, loosen the bearing lock nut until you can rotate it by hand.

SST 09509-25011

(d) Using SST, retighten the bearing lock nut.

SST 09509-25011

Torque: 600 kg-cm (43 ft-lb, 59 N·m)

(e) Using SST, loosen the bearing lock nut until you can rotate it by hand.

SST 09509-25011

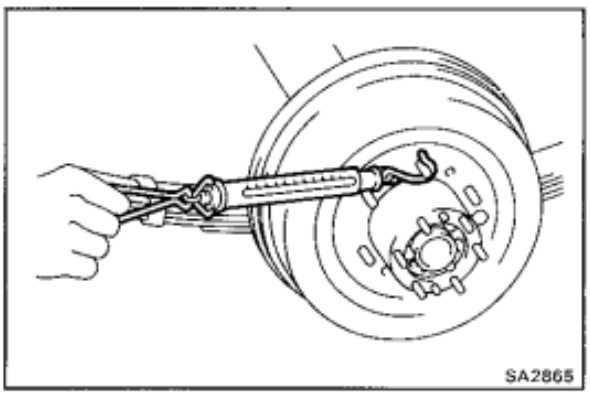

(f) Using a spring tension gauge, measure the frictional force of the oil seal.

Rear wheel bearing preload (at starting):

0.4 — 3.3 kg (0.9 — 7.3 lb, 4 — 32 N)

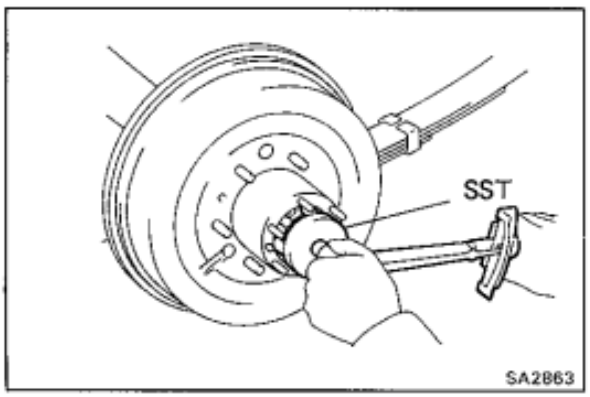

(g) Using SST, retighten the bearing lock nut.

SST 09509-25011

Torque: 600 kg-cm (43 ft-lb, 59 N·m)

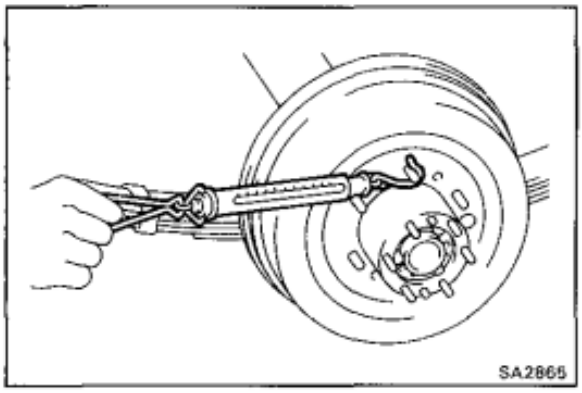

(h) Using a spring tension gauge, measure the preload at the hub bolt.

Rear wheel bearing preload (at starting):

2.6 — 5.7 kg (5.7 — 12.6 lb, 25 — 56 N)

If preload is not with in specification, the procedure above must be repeated.

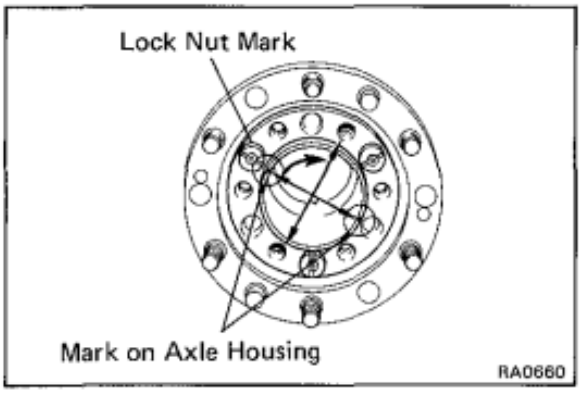

(i) Align the lock nut mark with one of the marks on the axle housing, and place lock screws in the holes at right angles to the lock nut.

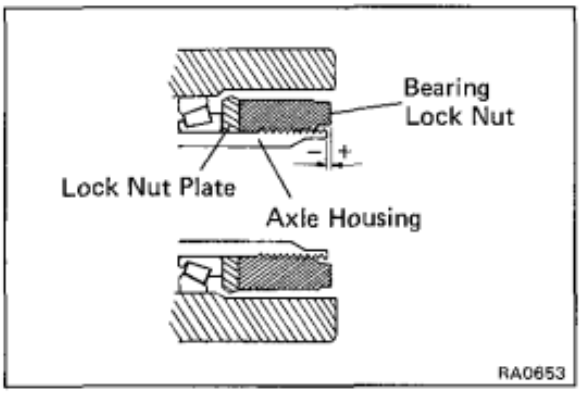

(j) Measure the distance between the top surface of axle housing and the lock nut.

Standard distance:

−0.2 — 0.9 mm (−0.008 — 0.035 in.)

If not within specification, reinstall the axle hub.

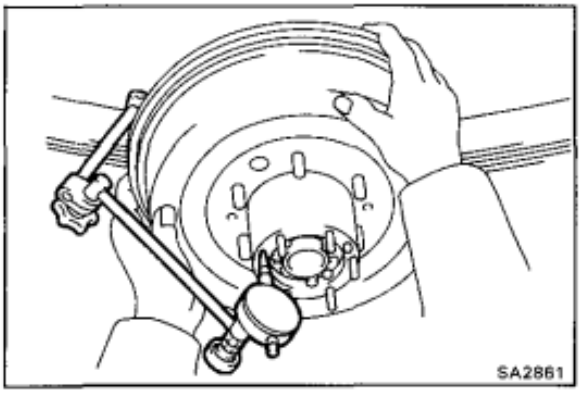

(k) Check the movement of the drum or disc rotor.

(m) Check the hub axial play.

Hub axial play: Less than 0.1 mm (0.004 in.)

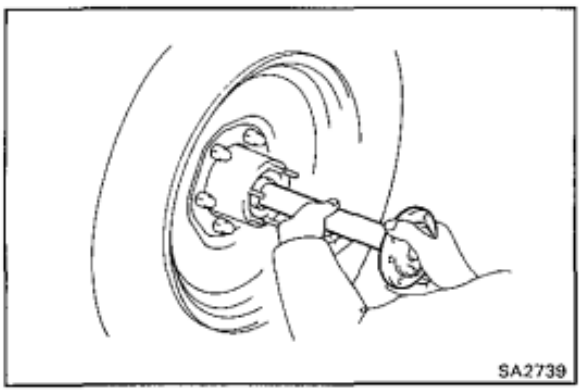

6. **INSTALL REAR AXLE SHAFT**
(See page SA-118)

7. **INSTALL WHEEL AND LOWER VEHICLE**

REAR DIFFERENTIAL / 8 INCH TYPE

On-Vehicle Replacement of Front Oil Seal

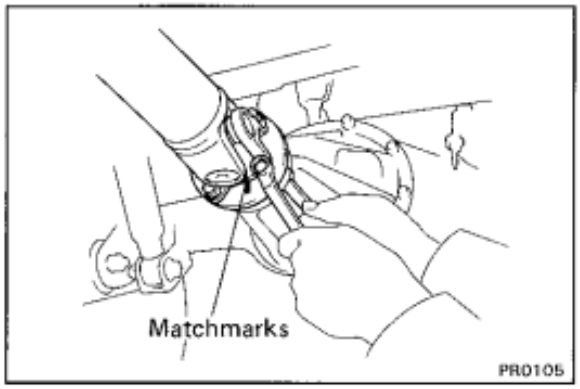

1. **DISCONNECT REAR PROPELLER SHAFT**
   (a) Place matchmarks on the flanges.
   (b) Remove the four bolts and nuts.

2. **REMOVE COMPANION FLANGE**
   (See step 2 on page SA-50)

3. **REMOVE OIL SEAL AND OIL SLINGER**
   (See step 3 on page SA-50)

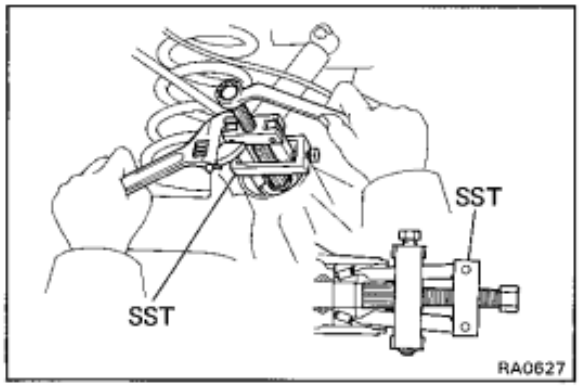

4. **REMOVE FRONT BEARING AND BEARING SPACER**
   (a) Using SST, remove the front bearing from the drive pinion.
   SST 09556-22010
   (b) Remove the bearing spacer.

5. **INSTALL NEW BEARING SPACER AND FRONT BEARING**

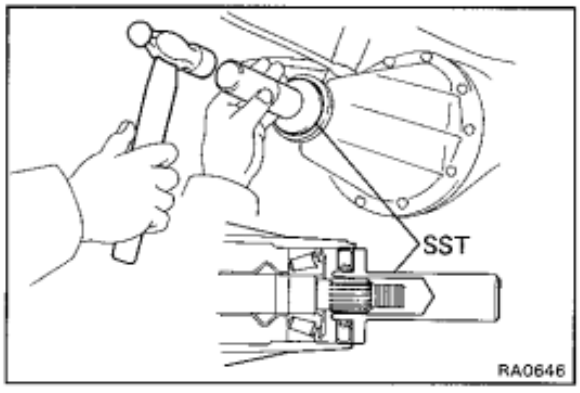

6. **INSTALL OIL SLINGER AND NEW OIL SEAL**
   (a) Install the oil slinger facing as shown.
   (b) Using SST, drive in a new oil seal as shown.
   SST 09554-30011 (w/o Differential Lock)
   09214-76011 (w/ Differential Lock)
   Oil seal drive in depth: 1.0 mm (0.039 in.)
   (c) Apply MP grease to the oil seal lip.

7. **INSTALL COMPANION FLANGE**
(See step 13 on page SA-52)

8. **CHECK DRIVE PINION PRELOAD**
(See step 14 on page SA-52)

9. **STAKE DRIVE PINION NUT**

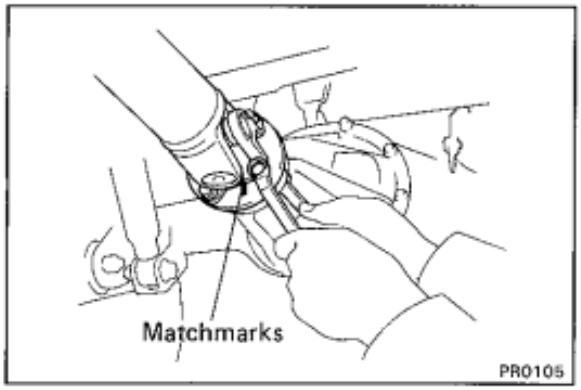

10. **CONNECT REAR PROPELLER SHAFT**

(a) Align matchmarks on the flanges and connect the flanges with four bolts, spring washers and nuts.

(b) Torque the bolts and nuts.

Torque: 750 kg-cm (54 ft-lb, 74 N·m)

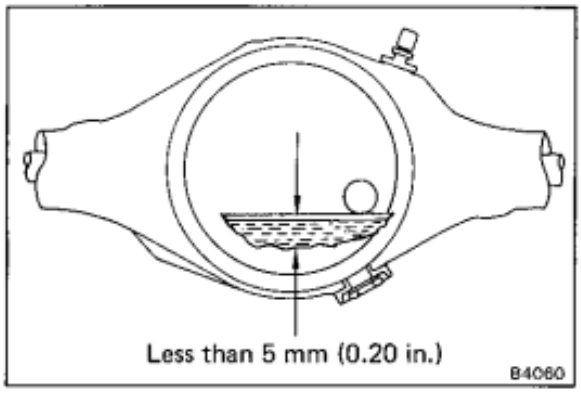

11. **CHECK DIFFERENTIAL OIL LEVEL**

Fill with hypoid gear oil if necessary.

Oil type:
w/o LSD API GL-5
w/ LSD API GL-5 for LSD

Recommended oil viscosity:
Above — 18°C (0°F) SAE 90
Below — 18°C (0°F) SAE 80W or 80W-90

Capacity: 1.85 liters (2.0 US qts, 1.6 Imp. qts)

Removal and Installation of Rear Differential

COMPONENTS

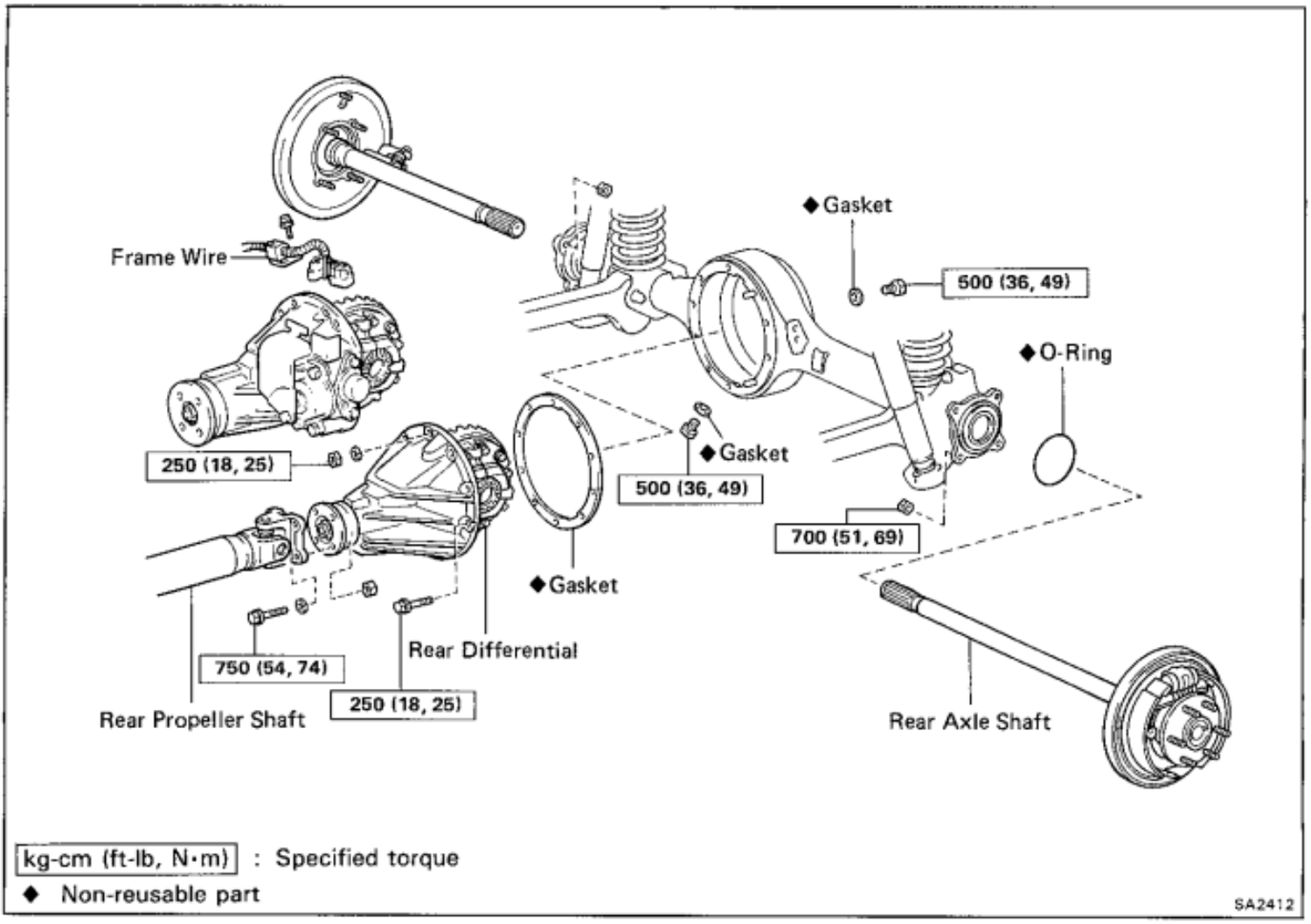

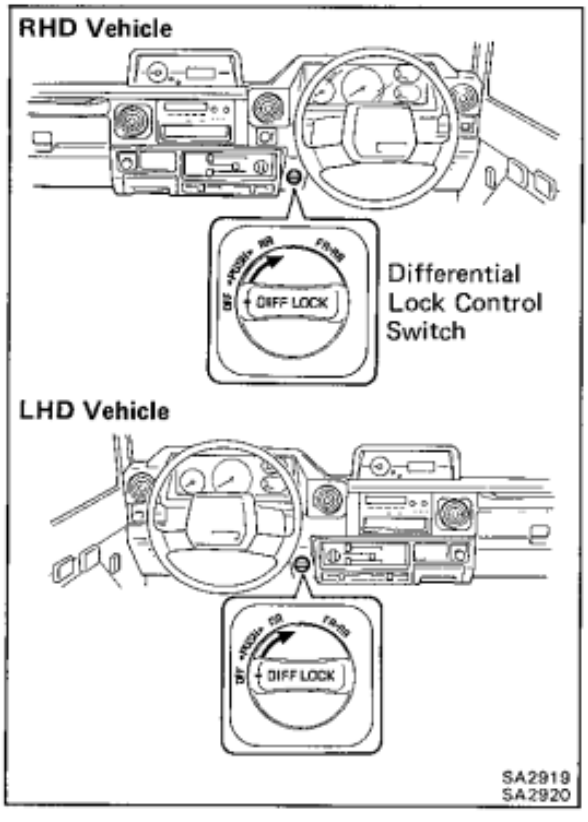

REMOVAL OF REAR DIFFERENTIAL

1. **(w/ DIFFERENTIAL LOCK) SHIFT REAR DIFFERENTIAL LOCK**
   (a) Turn the ignition switch to ON position.
   (b) Put on the 4WD switch.
   (c) Turn the differential lock control switch to RR position, and lock the rear differential.

   HINT: Turning round the tires, check the tires, check they are the differential lock condition.

   (d) Disconnect the cable from the negative terminal of the battery.

2. **REMOVE DRAIN PLUG AND DRAIN DIFFERENTIAL OIL**

3. **REMOVE REAR AXLE SHAFTS**
(See steps 1 to 10 on pages SA-108 to 111)

4. **DISCONNECT REAR PROPELLER SHAFT**
(See step 1 on page SA-125)

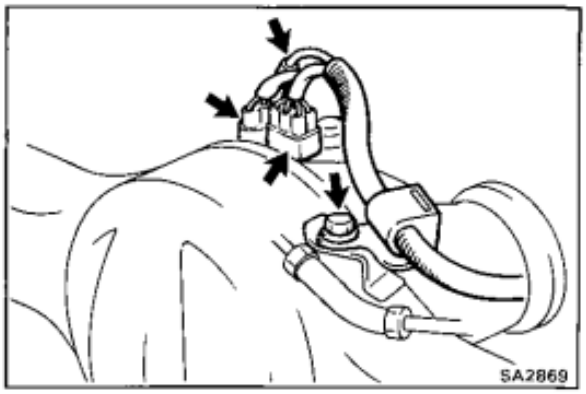

5. **(w/ DIFFERENTIAL LOCK)**
DISCONNECT FRAME WIRE

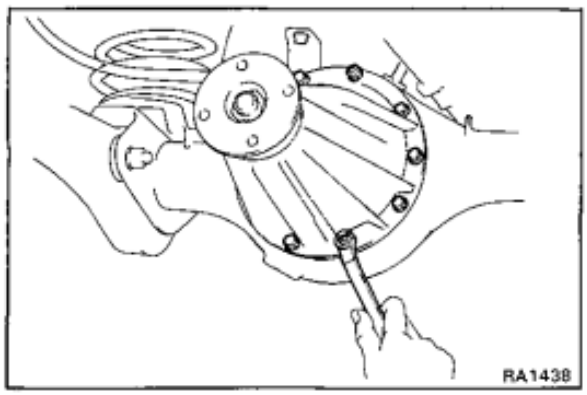

6. **REMOVE DIFFERENTIAL CARRIER ASSEMBLY**

NOTICE: Do not scratch the installation surface.

INSTALLATION OF REAR DIFFERENTIAL

(See page SA-127)

1. **(w/ DIFFERENTIAL LOCK)**
CHECK DIFFENTIAL LOCK OPERATION

(a) Connect the connector of the actuator to the connector of the vehicle side, and check that the sleeve is on work with switching over the differential control switch.

(b) After checking the differential, keep it in a lock state.

2. **INSTALL A NEW GASKET**

3. **INSTALL DIFFERENTIAL CARRIER ASSEMBLY**

Install the differential carrier assembly in the axle and install the two nuts and eights bolts. Torque the nuts and bolts.

Torque: 250 kg-cm (18 ft-lb, 25 N·m)

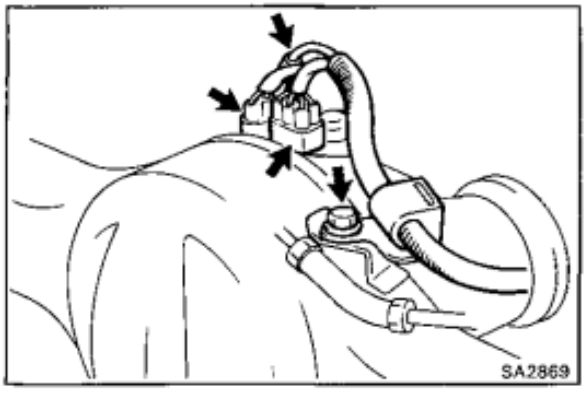

4. **(w/ DIFFERENTIAL LOCK)**
CONNECT FRAME WIRE

HINT:

- When connecting the bleeder tube of the harness side to the hose of the actuator side, its depth of insertion is approx. 15 mm (0.59 in.).
- Take care that water or the equivalent shall not adhere to the connectors and hose.

5. **CONNECT REAR PROPELLER SHAFT**
(See step 10 on page SA-126)

6. **INSTALL REAR AXLE SHAFTS**
(See steps 2 to 9 on pages SA-112 to 115)

7. **INSTALL DRAIN PLUG**

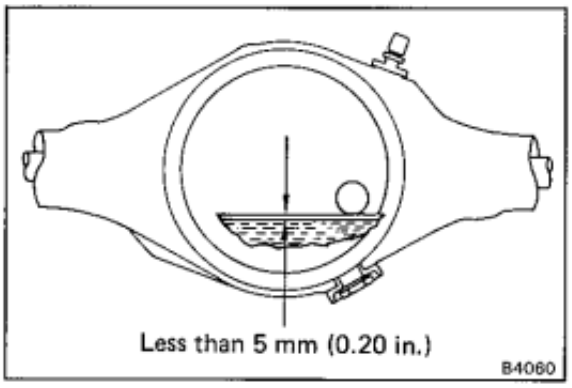

8. **FILL DIFFERENTIAL WITH GEAR OIL**

Fill with hypoid gear oil.

Oil type:
w/o LSD API GL-5
w/ LSD API GL-5 for LSD

Viscosity:
Above — 18°C (0°F) SAE 90
Below — 18°C (0°F) SAE 80W or 80W-90

Capacity: 1.85 liters (2.0 US qts, 1.6 Imp. qts)

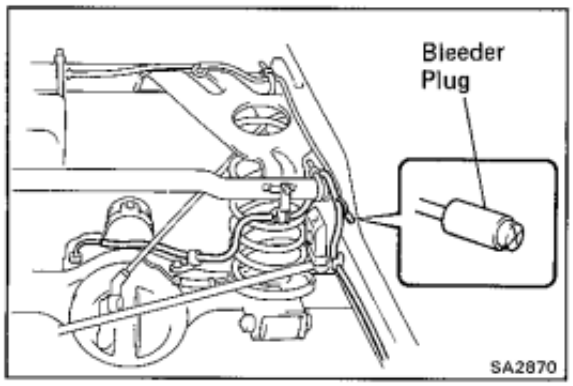

9. **(w/ DIFFERENTIAL LOCK)**
CHECK DIFFERENTIAL LOCK OPERATION
(See page SA-182)

10. **(w/ DIFFERENTIAL LOCK)**
CHECK BLEEDER PLUG

Check that the bleeder plug at the tip of the bleeder tube (above the right side frame) is not damaged or worn.

Differential Carrier

COMPONENTS

4 Pinion (w/o Differential Lock) and LSD Types

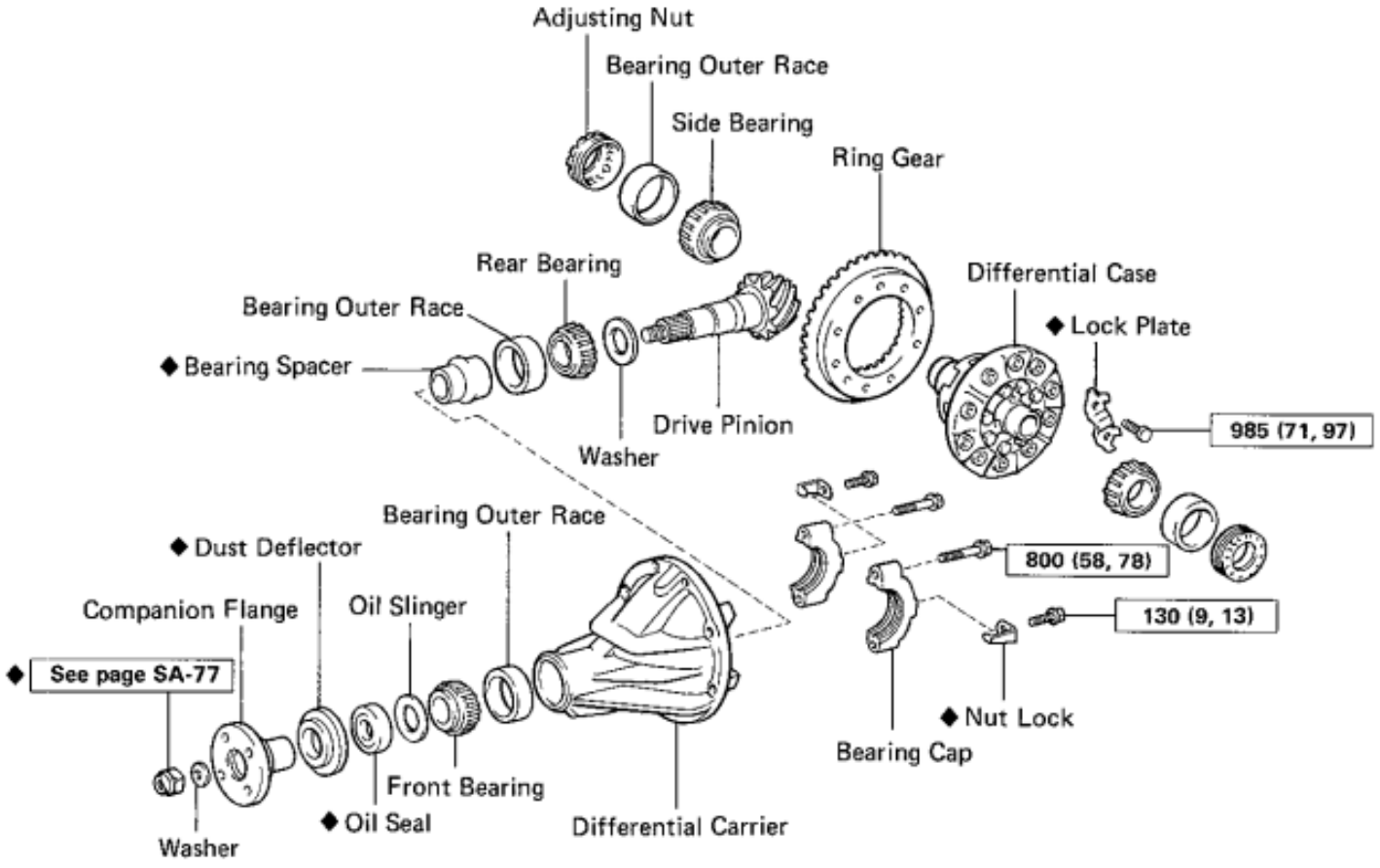

w/ Differential Lock

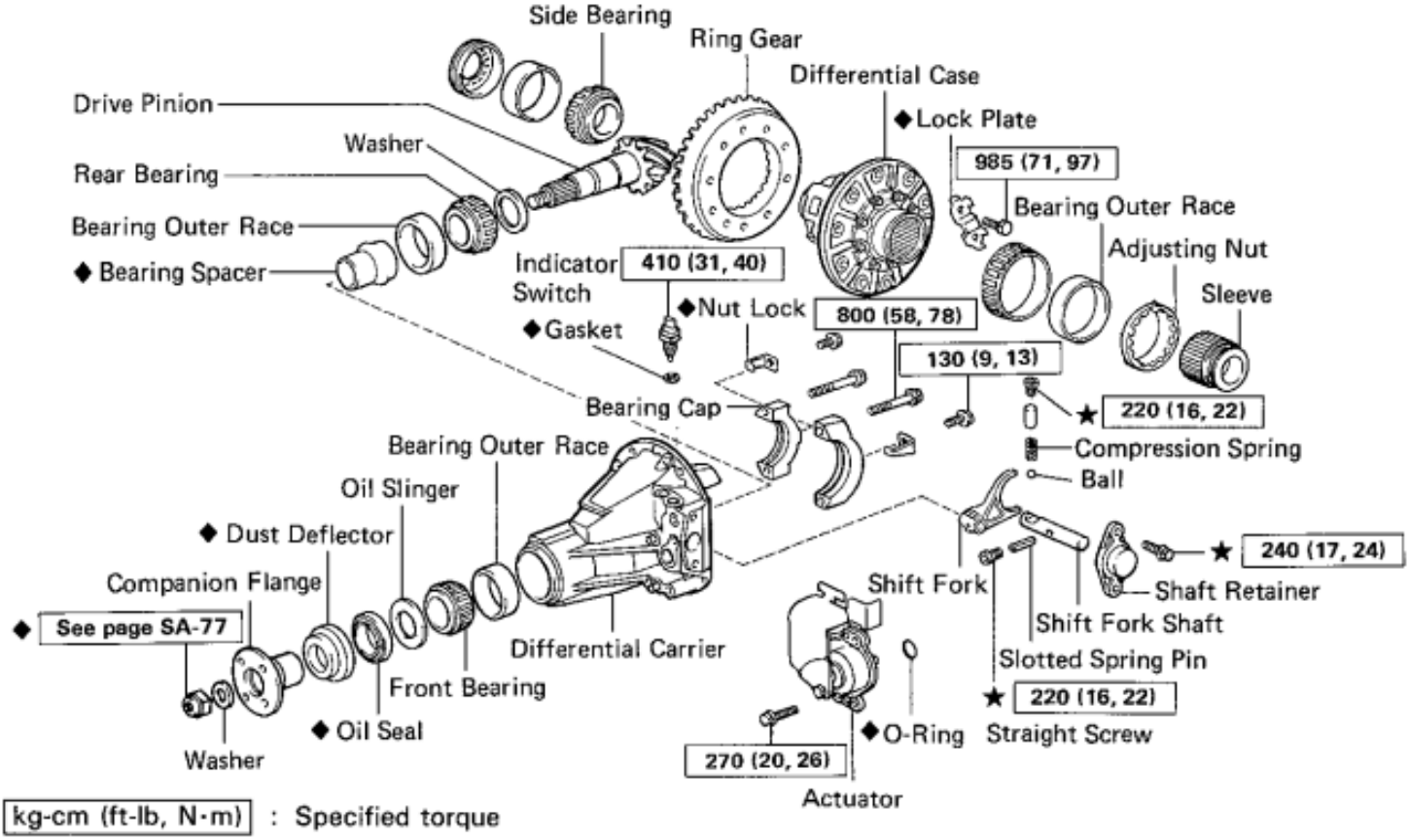

kg-cm (ft-lb, N·m) : Specified torque

◆ Non-reusable part

★ Precoated part

SA2583
SA2582

INSPECTION OF DIFFERENTIAL CARRIER
(See pages SA-61, 62)

DISASSEMBLY OF DIFFERENTIAL CARRIER
(See pages SA-63 to 68 and 130)

INSPECTION AND REPLACEMENT OF DIFFERENTIAL COMPONENTS
(See page SA-68)

ASSEMBLY OF DIFFERENTIAL CARRIER
(See pages SA-69 to 81 and 130)

Differential Case (4 Pinion Type)

COMPONENTS (w/o DIFFERENTIAL LOCK)

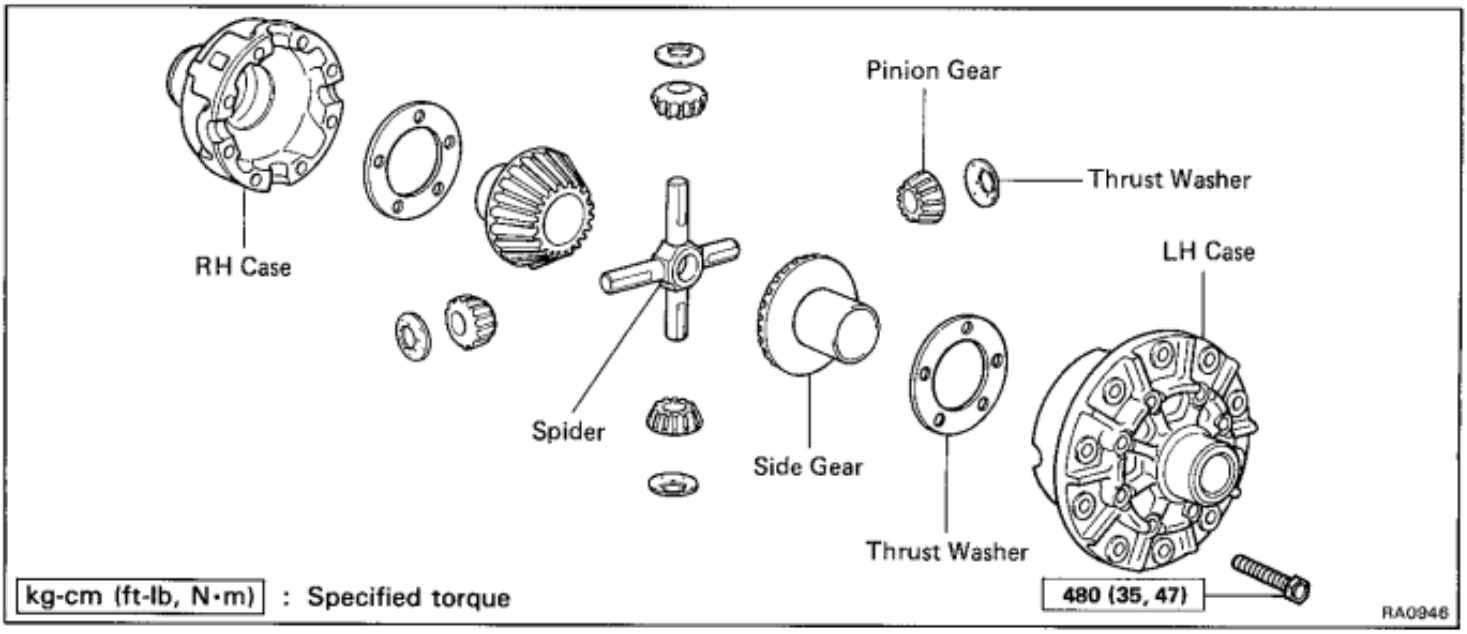

COMPONENTS (w/ DIFFERENTIAL LOCK)
(See page SA-84)

REMOVAL OF DIFFERENTIAL CASE

1. REMOVE DIFFERENTIAL (See page SA-127)
2. REMOVE DIFFERENTIAL CASE FROM CARRIER (See page SA-130)

DISASSEMBLY OF DIFFERENTIAL CASE
(See page SA-84)

ASSEMBLY OF DIFFERENTIAL CASE
(See page SA-85)

INSTALLATION OF DIFFERENTIAL

1. INSTALL DIFFERENTIAL CASE IN CARRIER (See page SA-130)
2. INSTALL DIFFERENTIAL (See page SA-127)

Differential Case (Limited Slip Differential)

COMPONENTS

HINT: *These thrust washers (thicker than the others) are used only by the manufacturer to adjust the pinion gear backlash and are not available as spare parts. For after-sales service, when replacing the thrust washers, replace them with a set of ten of the thinner thrust washers and adjust the pinion gear backlash using separately available adjusting shims.

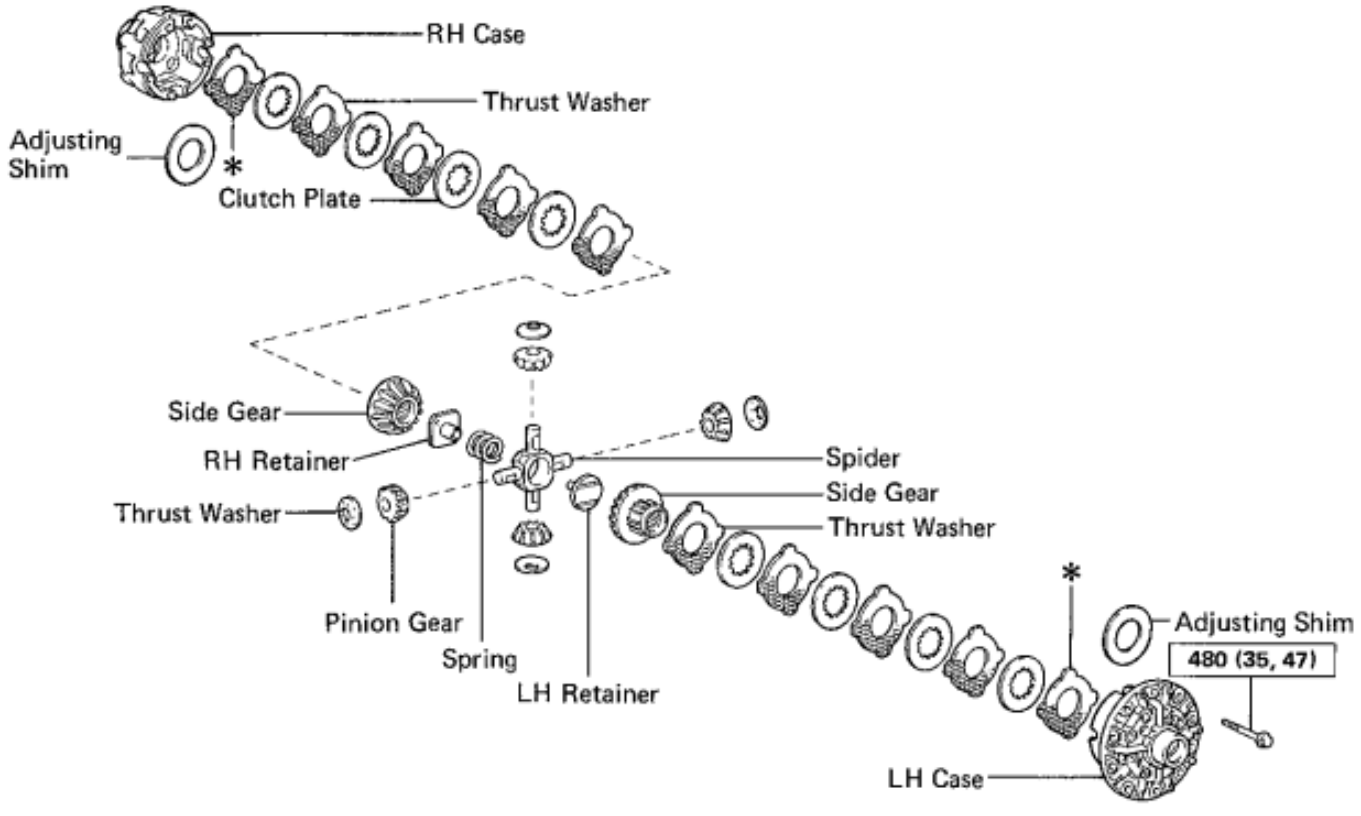

kg-cm (ft-lb, N·m) : Specified torque

D4656

REMOVAL OF DIFFERENTIAL CASE

1. **REMOVE DIFFERENTIAL (See page SA-127)**
2. **REMOVE DIFFERENTIAL CASE FROM CARRIER (See page SA-130)**

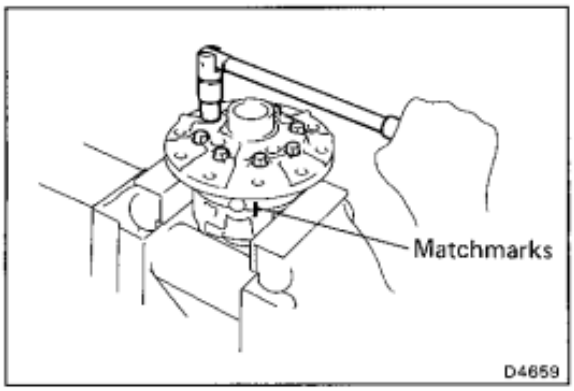

DISASSEMBLY OF DIFFERENTIAL CASE

(See page SA-132)

1. DISASSEMBLE DIFFERENTIAL CASE

(a) Place matchmarks on the LH and RH cases.

(b) Remove the eight bolts uniformly, little at a time.

(c) Using a plastic hammer, separate the LH and RH cases.

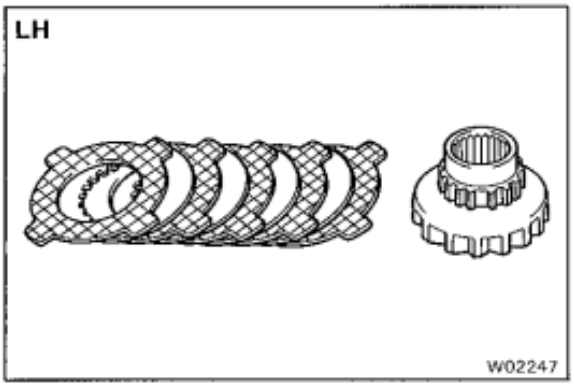

2. REMOVE FOLLOWING PARTS FROM CASE:

HINT: Keep the disassembled parts in order as shown in the illustration.

(a) Remove the following parts from LH case:

(1) Side gear

(2) Side gear thrust washer (5 pieces)

(3) Clutch plate (4 pieces)

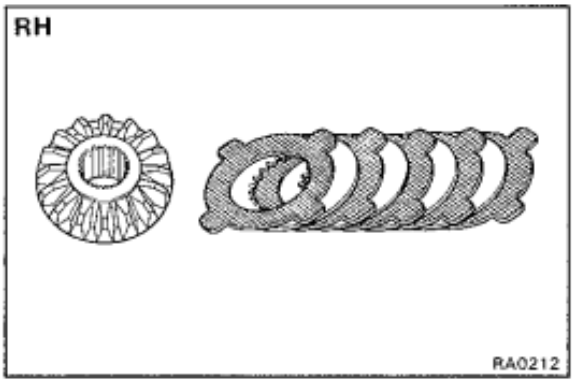

(b) Remove the following parts from RH case:

(1) Spring LH retainer and two springs

(2) Spider with pinion gear

(3) Spring RH retainer

(4) Side gear

(5) Side gear thrust washer (5 pieces)

(6) Clutch plate (4 pieces)

INSPECTION OF COMPONENTS

1. REPLACE PARTS THAT ARE DAMAGED OR WORN

HINT: If replacing the side gear, also replace the thrust washer contacting it.

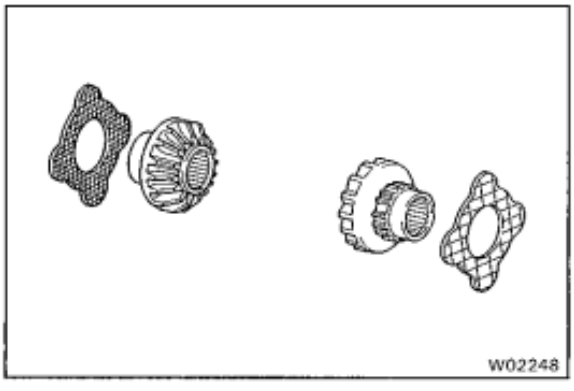

2. INSPECT THRUST WASHERS FOR WEAR OR DAMAGE

Check that the contact surface of the thrust washer is even and that no bare metal is showing.

(For reference)Thickness limit: 1.74 mm (0.0685 in.)

If necessary replace the thrust washers.

HINT: If replacing the thrust washer, also replace the clutch plate contacting with it.

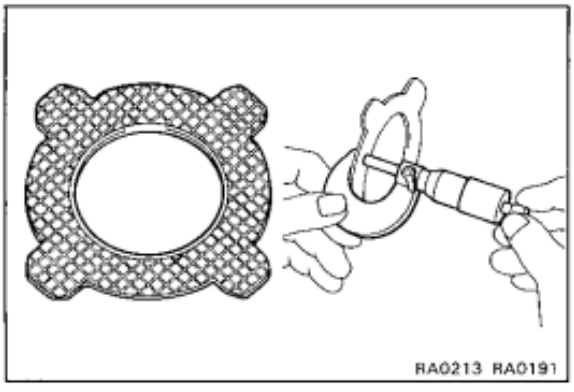

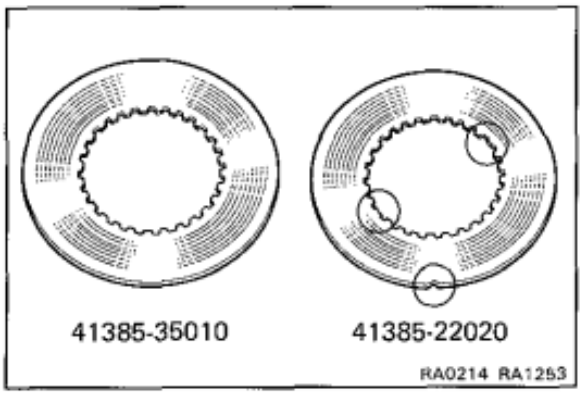

3. INSPECT CLUTCH PLATE FOR WEAR OR DAMAGED

Check see that there is no abnormal wear.If necessary, replace the clutch plate.

HINT: As shown in the illustration, there are two types of clutch plates. The clutch plate in differential will either have a notched portion on its rim or teeth missing at two places on the inner ring (right side), or a clutch plate with no missing teeth or notched portion (left side). Therefore, when replacing the clutch plates never mix these two types inside the same differential.

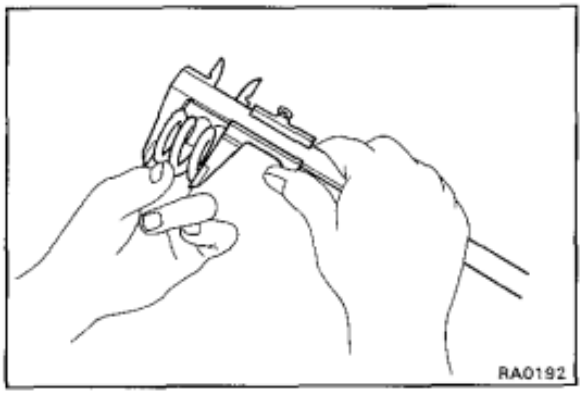

4. INSPECT SPRING FREE LENGTH

Measure the free length of the spring.

Limit: Length 31.3 mm (1.232 in.)

SELECT ADJUSTING SHIM

1. MEASURE RH CASE

Measure the RH case as shown in the figure.

"A" = Case dimension.

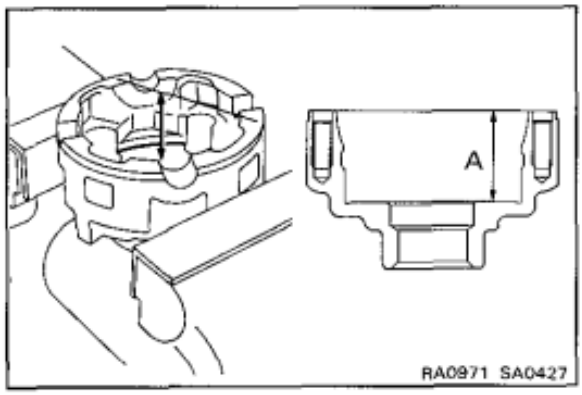

2. MEASURE SIDE GEAR, THRUST WASHER AND CLUTCH PLATE

(a) Assemble the side gear, thrust washers and clutch plates on the side gear.

HINT: Do not assemble the adjusting shims.

(b) Using SST to press down the thrust washers and clutch plates with about 10 kg (22 lb) of pressure, measure dimension "B".

SST 09726-35010

TOTAL SHIM THICKNESS C:

"C" = "A" – "B" – 16.15 mm (0.6358 in.)

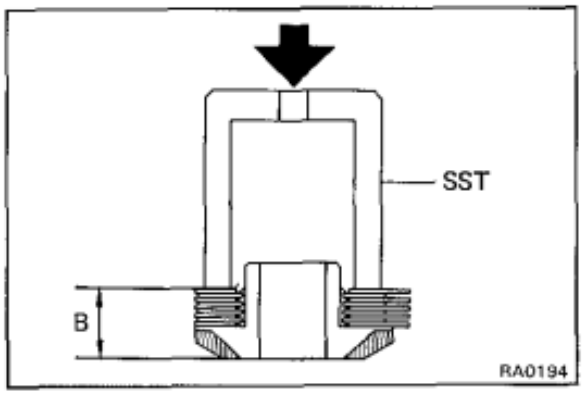

(c) Refering to the selection table on the next page select the proper adjusting shims.

HINT: The thrust washer attached to the outside of the side gear is marked from A to M according to thickness. This part is used only during assembly at the factory and therefore is neither a supply part, nor does it have a part number.
During repair, install the selected adjusting shim (marked A through E) between the outermost thrust washer and case.

Adjusting shim thickness mm (in.)

Mark	Thickness	Mark	Thickness
A	0.15 (0.0059)	D	0.30 (0.0118)
B	0.20 (0.0079)	E	0.35 (0.0138)
C	0.25 (0.0098)		

Adjusting shim selection table mm (in.)

B Dimension	A Dimension 45.00 .00 (1.7717)	.01 (1.7720)	.02 (1.7724)	.03 (1.7728)	.04 (1.7732)	.05 (1.7736)	.06 (1.7740)	.07 (1.7744)
28.10 (1.1063)							Ⓒ + Ⓒ + Ⓓ	
.12 (1.1071)								
.14 (1.1079)					Ⓒ + Ⓒ + Ⓒ			
.16 (1.1087)								
.18 (1.1094)					Ⓔ + Ⓔ			
.20 (1.1102)								
.22 (1.1110)					Ⓓ + Ⓔ			
.24 (1.1118)								
.26 (1.1126)								
.28 (1.1134)					Ⓓ + Ⓓ			
.30 (1.1142)								
.32 (1.1150)					Ⓒ + Ⓓ			
.34 (1.1157)								
.36 (1.1165)								
.38 (1.1173)					Ⓒ + Ⓒ			
.40 (1.1181)								
.42 (1.1189)					Ⓑ + Ⓒ			
.44 (1.1197)								
.46 (1.1205)								
.48 (1.1213)					Ⓑ + Ⓑ			
.50 (1.1220)								
.52 (1.1228)					Ⓔ			
.54 (1.1236)								
.56 (1.1244)								
.58 (1.1252)					Ⓓ			
.60 (1.1260)								
.62 (1.1268)				Ⓒ				
.64 (1.1276)								
.66 (1.1283)			Ⓑ					
.68 (1.1291)	Ⓐ							
.70 (1.1299)								

LH Case

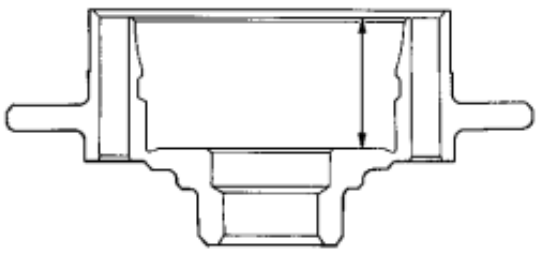

SA0428

3. SELECT ADJUSTING SHIMS FOR LH CASE IN SAME PROCEDURE

ASSEMBLY OF DIFFERENTIAL CASE

(See page SA-132)

HINT:

- Using a rag, clean off any foreign matter from the parts.
- Apply LSD oil to the contact surfaces of the clutch plates and the thrust washers.
- When installing, the thrust washers (Marking A — M) are not used. To adjust the backlash, use one new thrust washer or the adjusting shim.

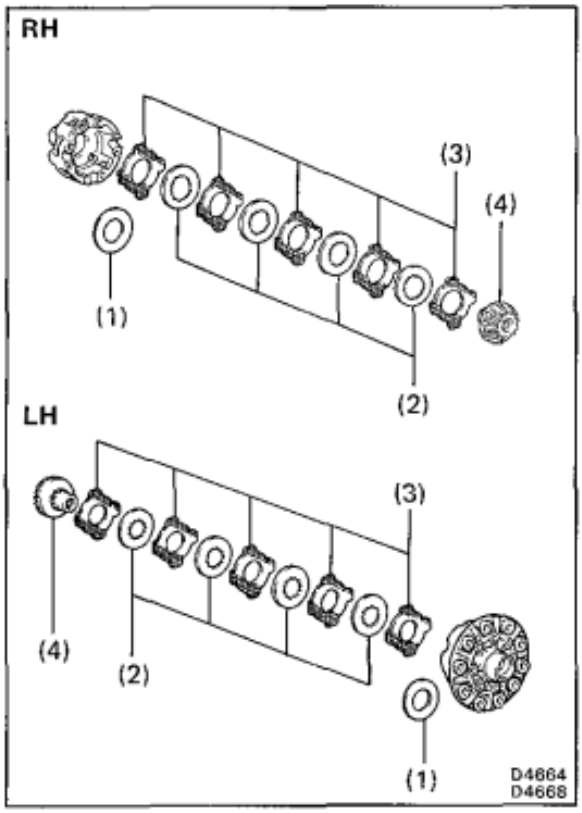

1. MEASURE SIDE GEAR BACKLASH

(a) Install the following parts to the LH and RH cases:

(1) Adjusting shim (0 to 3 pieces)

(2) Clutch plate (4 pieces)

(3) Side gear thrust washer (5 pieces)

(4) Side gear

HINT: Face the rough side of the thrust washer to the differential case.

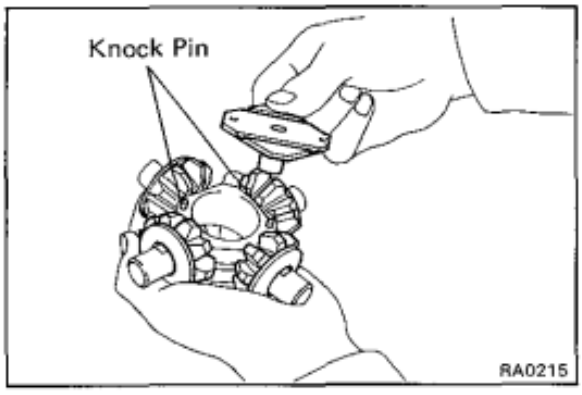

(b) Install the four pinion gears and thrust washers to the spider.

(c) Align the RH retainer holes with the spider knock pins and install the RH retainer.

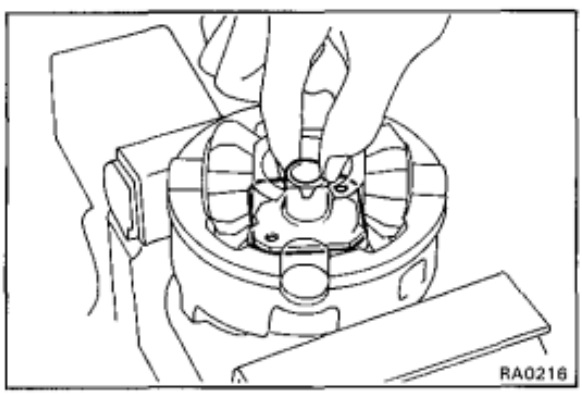

(d) Install the pinion gear and spider to the RH case.

HINT: Install the spider to the RH case tightly, and don't move the spring retainer.

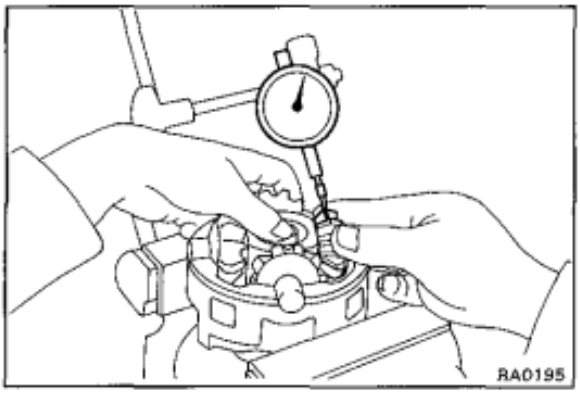

(e) Hold the side gear and spider, measure the side gear backlash.

Backlash: 0.05 — 0.20 mm (0.0020 — 0.0079 in.)

HINT:

- Measure the backlash at the RH case and at the LH case.
- Measure at all four locations.

If the backlash is not within specification, select an adjusting shim.

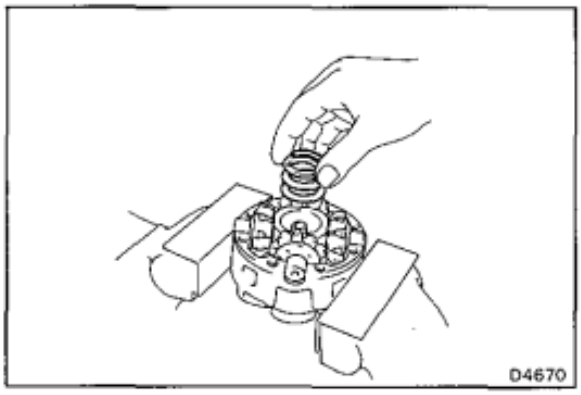

2. ASSEMBLE DIFFERENTIAL CASE

(a) Reinstall the spider and spring RH retainer to the RH case.

HINT: Install the spider the RH case tightly, and don't move the spring.

(b) Install the compression spring and spring LH retainer.

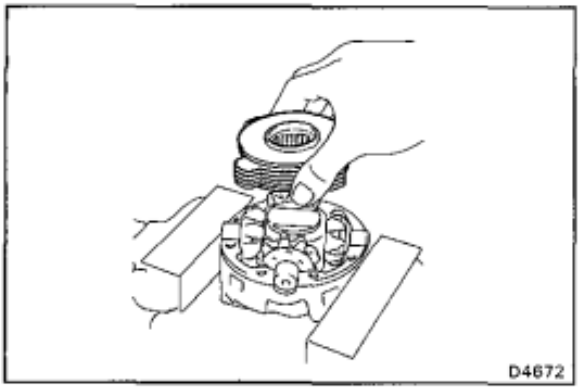

(c) Install the side gear, thrust washers and clutch plates.

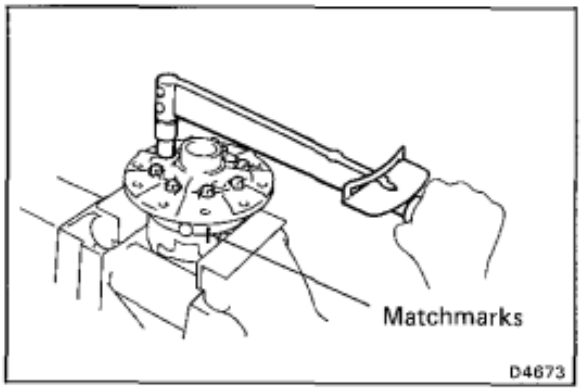

(d) Align matchmarks and assemble LH and RH cases.

HINT: Be careful not to drop the side gear, and check the pinion and side gear alignment.

(e) Tighten the eight bolts uniformly, a little at a time.

Torque: 480 kg-cm (35 ft-lb, 47 N·m)

INSTALLATION OF DIFFERENTIAL

1. INSTALL DIFFERENTIAL CASE IN CARRIER
(See page SA-130)

2. INSTALL DIFFERENTIAL
(See page SA-127)

REAR DIFFERENTIAL / 9.5 INCH TYPE

On-Vehicle Replacement of Front Oil Seal

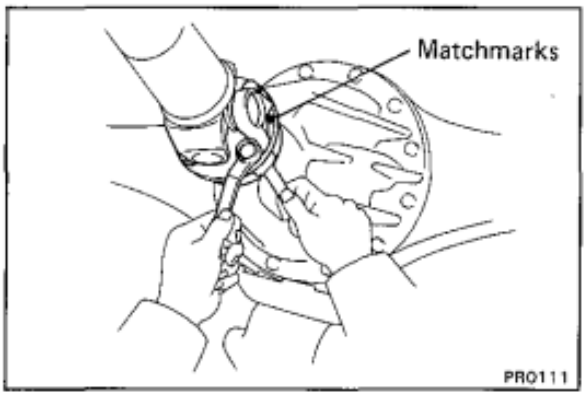

1. DISCONNECT REAR PROPELLER SHAFT

(a) Place matchmarks on the flanges.

(b) Remove the four bolts and nuts.

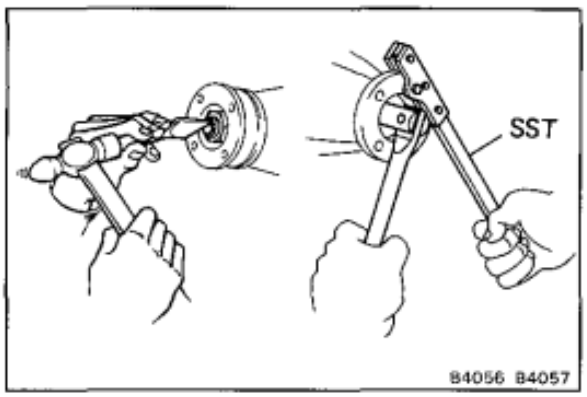

2. REMOVE COMPANION FLANGE

(a) Using a hammer and chisel, loosen the staked part of the nut.

(b) Using SST to hold the flange, remove the nut and plate washer.

SST 09330-00021

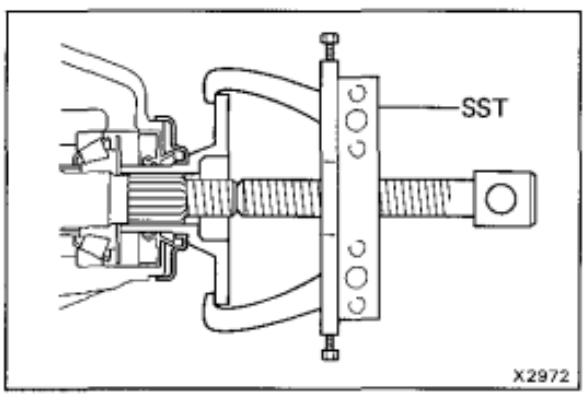

(c) Using SST, remove the companion flange.

SST 09950-20017

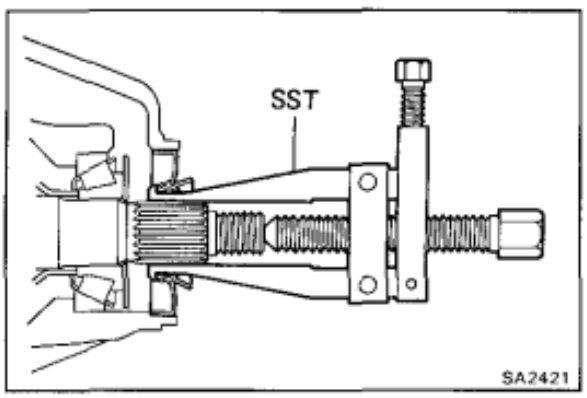

3. REMOVE OIL SEAL AND OIL SLINGER

(a) Using SST, remove the oil seal.

SST 09308-10010

(b) Remove the oil slinger.

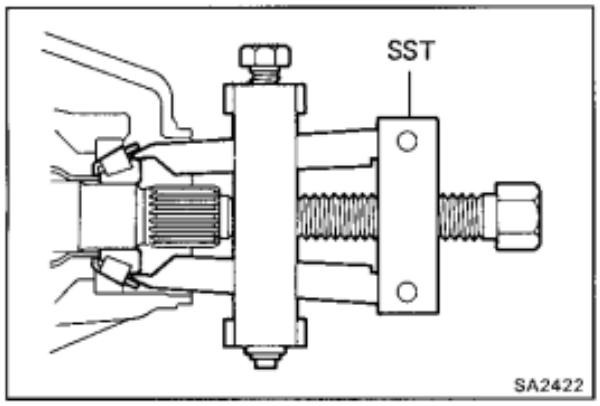

4. REMOVE FRONT BEARING

Using SST, remove the front bearing.

SST 09556-22010

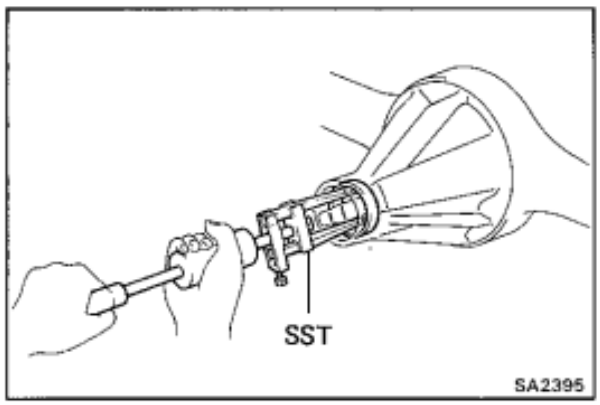

5. REMOVE BEARING OUTER RACE

Using SST, remove the bearing outer race.

SST 09308-00010

NOTICE: Do not scratch the taper surface of the outer race.

6. REMOVE BEARING SPACER

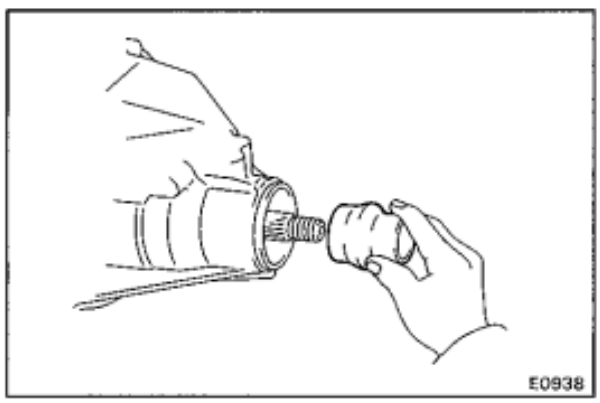

7. INSTALL NEW BEARING SPACER

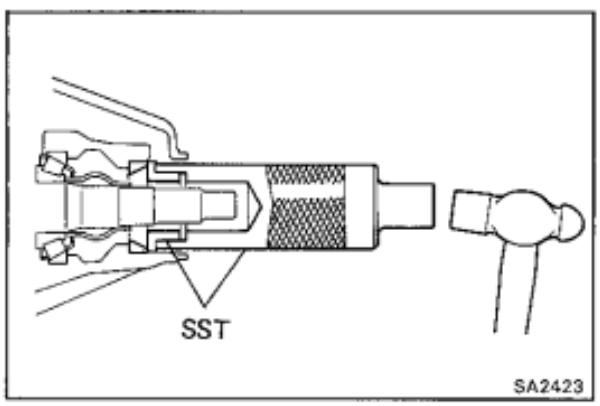

8. INSTALL BEARING OUTER RACE

Using SST, drive in the bearing outer race.

SST 09316-60010 (09316-00010, 09316-00020)

9. INSTALL FRONT BEARING

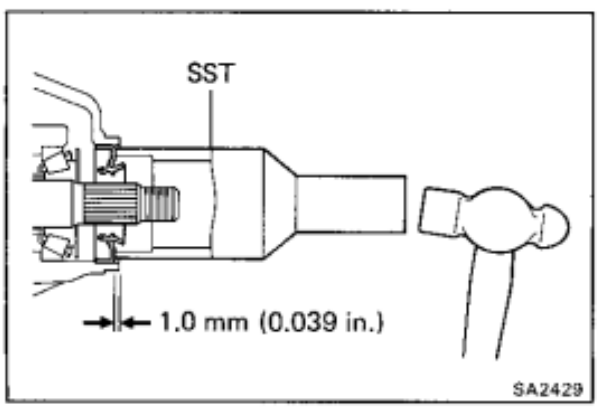

10. INSTALL OIL SLINGER AND NEW OIL SEAL

(a) Install the oil slinger facing as shown.

(b) Using SST, drive in a new oil seal as shown.

SST 09214-76011

Oil seal drive in depth: 1.0 mm. (0.039 in.)

(c) Coat the lip of the oil seal with MP grease.

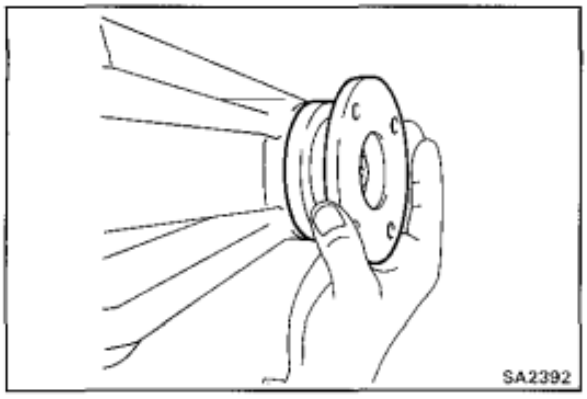

11. INSTALL COMPANION FLANGE

(a) Install the companion flange and plate washer.

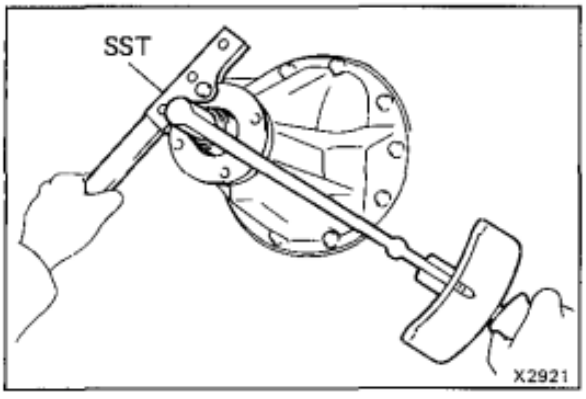

(b) Apply a light coat of gear oil on the threads of a new companion flange nut.

(c) Using SST to hold the flange, torque the nut.

SST 09330-00021

Torque: 2,500 kg-cm (181 ft-lb, 245 N·m)

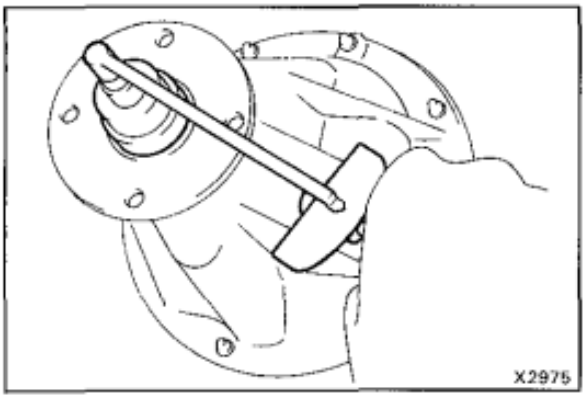

12. CHECK DRIVE PINION PRELOAD

Using a torque meter, measure the preload of the backlash between the drive pinion and ring gear.

Preload (at starting):

New bearing

13 — 20 kg-cm

(11.3 — 17.4 in.-lb, 1.3 — 2.0 N·m)

Reused bearing

7 — 10 kg-cm

(6.1 — 8.7 in.-lb, 0.7 — 1.0 N·m)

- If preload is greater than specification, replace the bearing spacer.
- If preload is less than specification, retighten the nut 130 kg-cm (9 ft-lb, 13 N·m) at a time until the specified preload is reached.

If the maximum torque is exceeded while retightening the nut, replace the bearing spacer and repeat the preload procedure. Do not back off the pinion nut to reduce the preload.

Maximum torque: 4,500 kg-cm (325 ft-lb, 441 N·m)

If everything is normal, coat the threads with gear oil, then repeat the above operation.

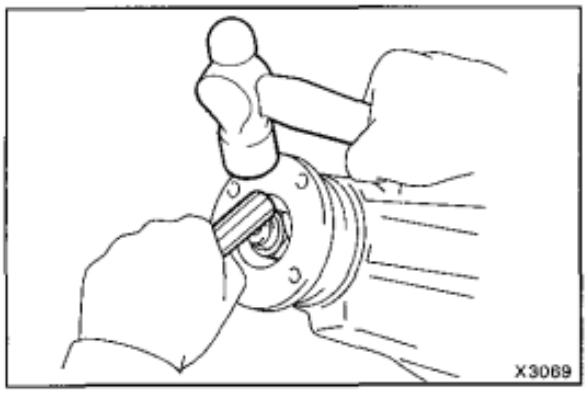

13. STRIKE DRIVE PINION NUT

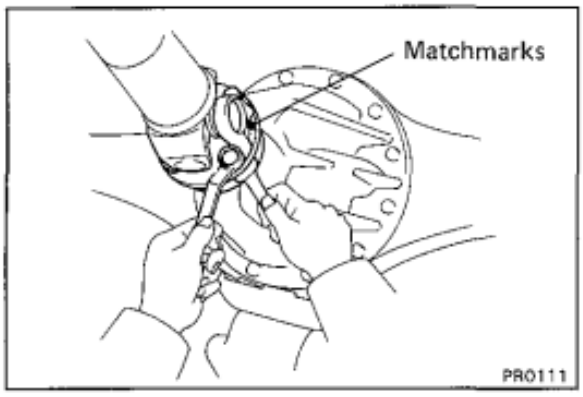

14. CONNECT REAR PROPELLER SHAFT

(a) Align matchmarks on the flanges and connect the flanges with four bolts, spring washers and nuts.

(b) Torque the bolts and nuts.

Torque: 900 kg-cm (65 ft-lb, 88 N·m)

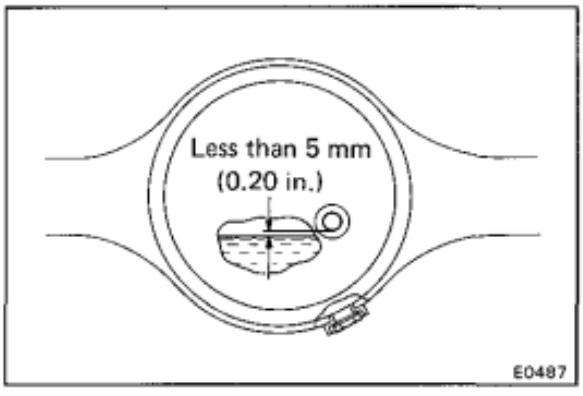

15. CHECK DIFFERENTIAL OIL LEVEL

Fill with hypoid gear oil if necessary.

Oil type: w/o LSD API GL-5
w/ LSD API GL-5 for LSD

Recommended oil viscosity:
Above −18°C (0°F) SAE 90
Below −18°C (0°F) SAE 80W or 80W-90

Capacity: 2.5 liters (2.6 US qts, 2.2 Imp. qts)

Removal and Installation of Rear Differential

COMPONENTS

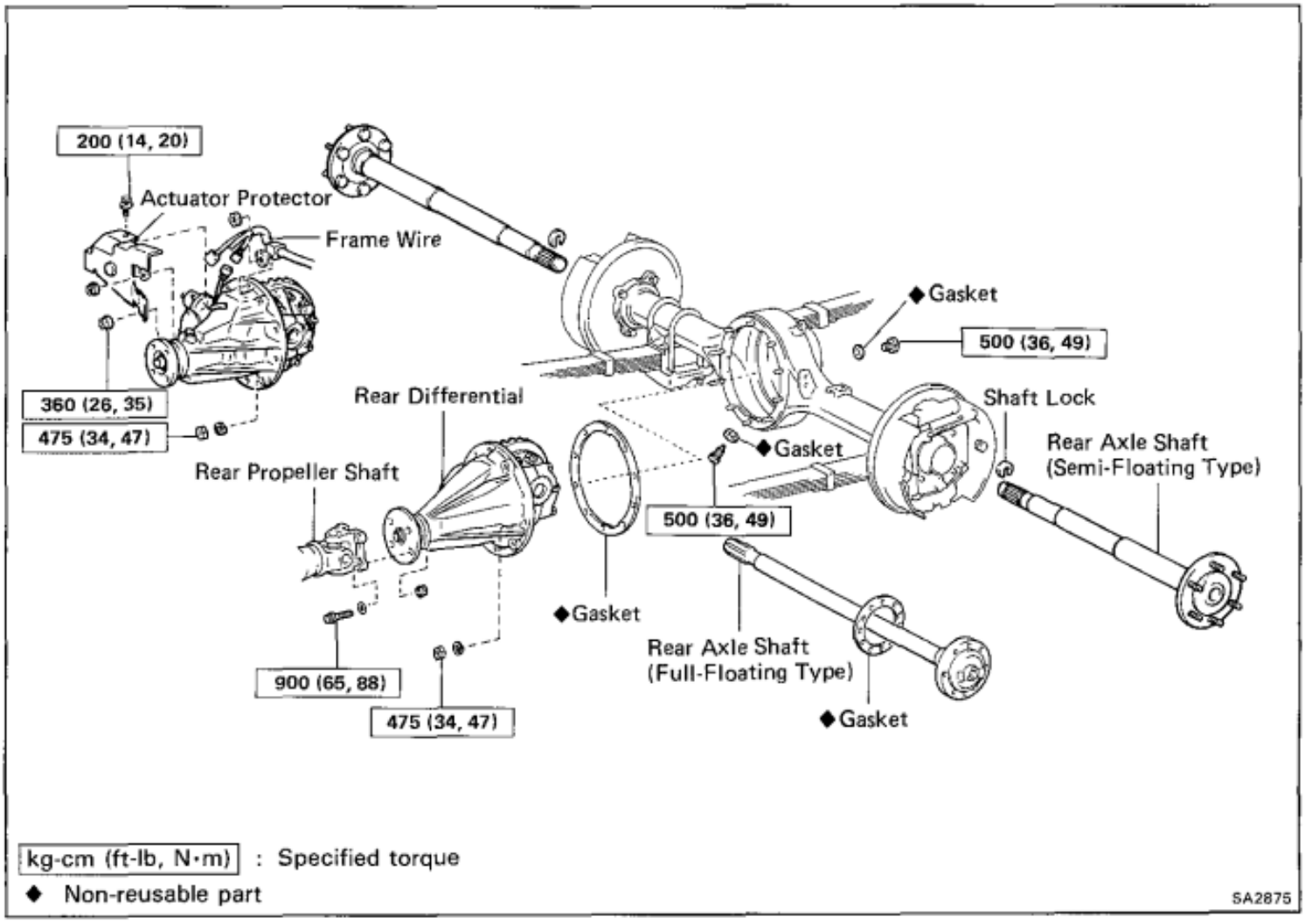

kg-cm (ft-lb, N·m) : Specified torque
◆ Non-reusable part

SA2875

REMOVAL OF REAR DIFFERENTIAL

1. **(w/ DIFFERENTIAL LOCK)**
   SHIFT REAR DIFFERENTIAL LOCK
   (See step 1 on page SA-127)

2. **REMOVE DRAIN PLUG AND DRAIN DIFFERENTIAL OIL**

3. **REMOVE REAR AXLE SHAFTS**
   (Semi-Floating Type: See page SA-108)
   (Full-Floating Type: See page SA-116)

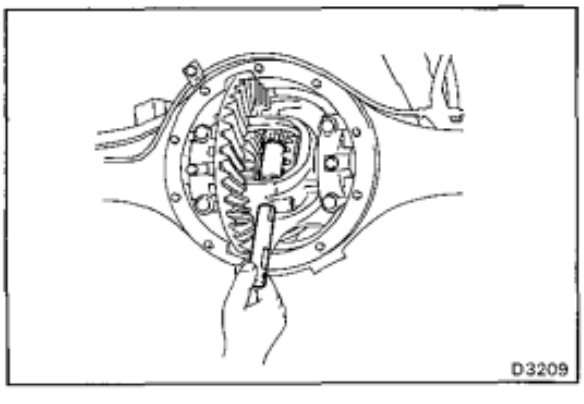

D3209

4. **DISCONNECT REAR PROPELLER SHAFT**
   (See step 1 on page SA-138)

5. **(2 PINION TYPE)**
   INSTALL PINION SHAFT AND PINION SPACER
   (a) Install the spacer and pinion shaft to the differential.

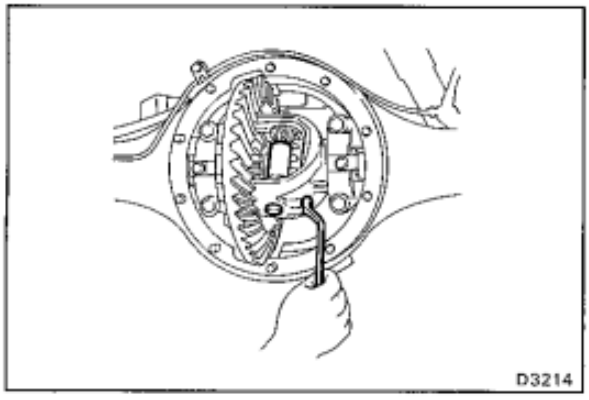

(b) Install the pinion shaft pin.

Torque: 275 kg-cm (20 ft-lb, 27 N·m)

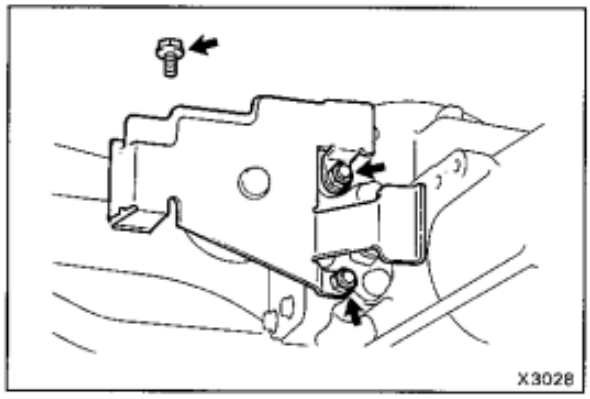

6. (w/ DIFFERENTIAL LOCK) REMOVE ACTUATOR PROTECTOR

Remove the two nuts, bolt and protector.

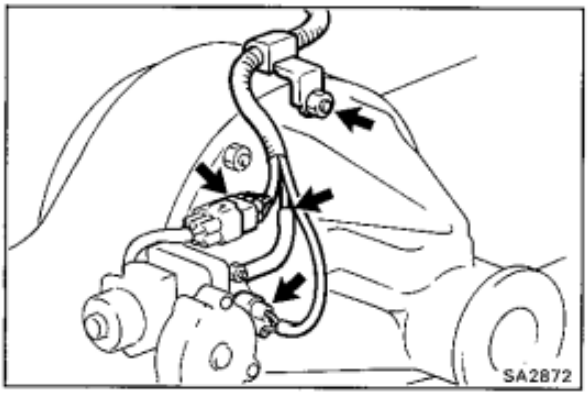

7. (w/ DIFFERENTIAL LOCK) DISCONNECT FRAME WIRE

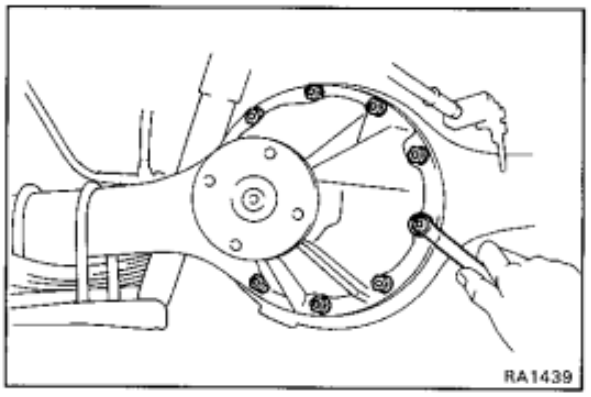

8. REMOVE DIFFERENTIAL CARRIER ASSEMBLY

NOTICE: Do not scratch the installation surface.

INSTALLATION OF REAR DIFFERENTIAL

(See page SA-142)

1. (w/ DIFFERENTIAL LOCK) CHECK DIFFENTIAL LOCK OPERATION

(a) Connect the connector of actuator to the connector of the vehicle side, and check that the sleeve is on work with switching over the differential lock control switch.

(b) After checking the differential, keep it in a lock state.

2. INSTALL A NEW GASKET

3. INSTALL DIFFERENTIAL CARRIER ASSEMBLY

Install the differential carrier assembly in the axle and install the ten nuts. Torque the nuts.

Torque: 475 kg-cm (34 ft-lb, 47 N·m)

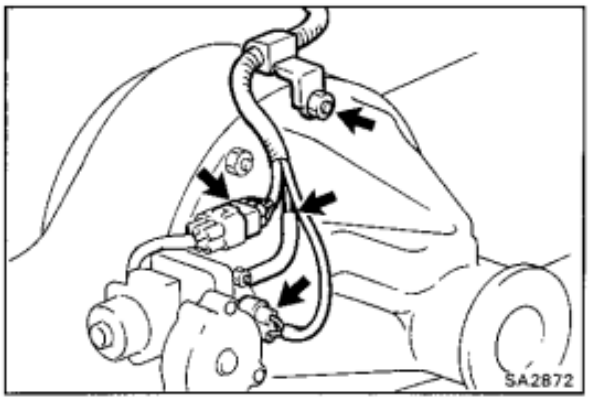

4. **(w/ DIFFERENTIAL LOCK) CONNECT FRAME WIRE**

HINT:

- When connecting the bleeder tube of the harness side to the hose of the actuator side, its depth of insertion is approx. 15 mm (0.59 in.).
- Take care that water or the equivalent shall not adhere to the connectors and hose.

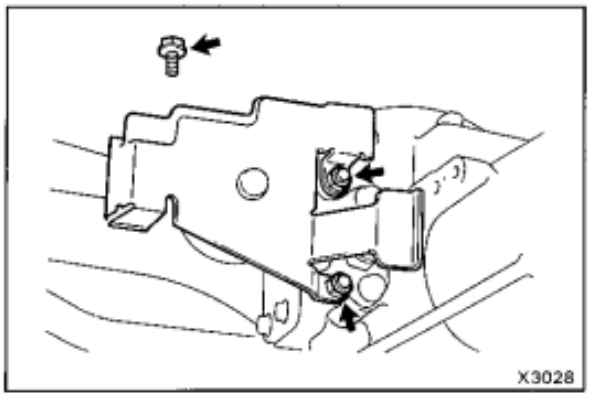

5. **(w/ DIFFERENTIAL LOCK) INSTALL ACTUATOR PROTECTOR**

Install the protector with the two nuts and bolt.

Torque: Bolt 200 kg-cm (14 ft-lb, 20 N·m)
Nut 360 kg-cm (26 ft-lb, 35 N·m)

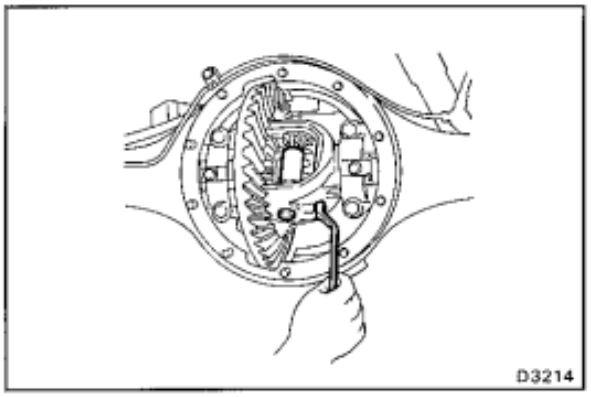

6. **(2 PINION TYPE) REMOVE PINION SHAFT AND PINION SPACER**

(a) Remove the pinion shaft pin from the differential.

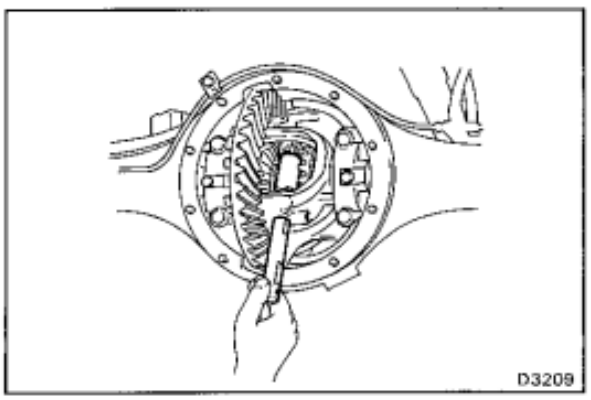

(b) Remove the pinion shaft and spacer.

HINT: When the pinion shaft is removed, the pinion gear and thrust washer will come off also.

7. **CONNECT REAR PROPELLER SHAFT**
(See step 14 on page SA-141)

8. **INSTALL REAR AXLE SHAFTS**

(Semi-Floating Type: See page SA-108)
(Full-Floating Type: See page SA-116)

9. **INSTALL DRAIN PLUG**

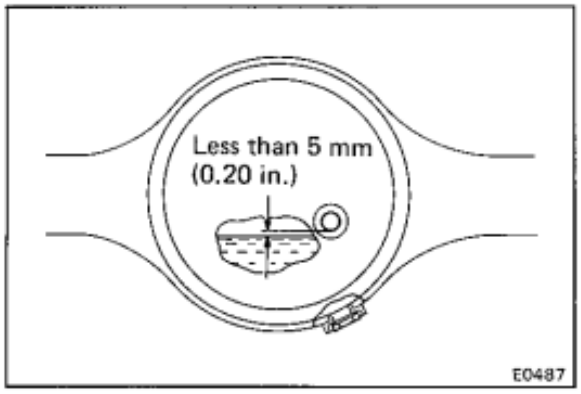

10. FILL DIFFERENTIAL WITH GEAR OIL

Fill with hypoid gear oil.

Oil type:

w/o LSD API GL-5
w/ LSD API GL-5 for LSD

Viscosity: Above −18°C (0°F) SAE 90
Below −18°C (0°F) SAE 80W or 80W-90

Capacity: 2.5 liters (2.6 US qts, 2.2 Imp. qts)

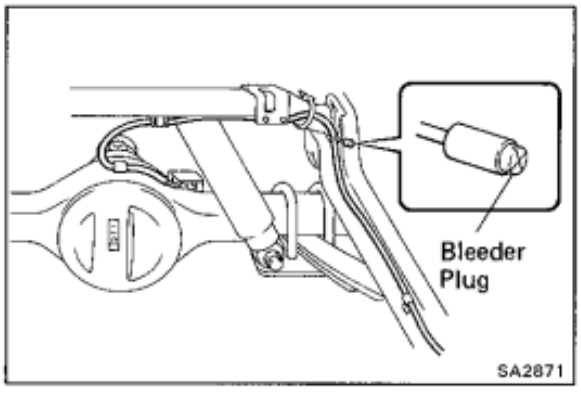

11. (w/ DIFFERENTIAL LOCK)
CHECK DIFFERENTIAL LOCK OPERATION
(See page SA-182)

12. (w/ DIFFERENTIAL LOCK)
CHECK BLEEDER PLUG

Check that the bleeder plug at the tip of the bleeder tube (above the right side frame) is not damage or worn.

Differential Carrier

COMPONENTS

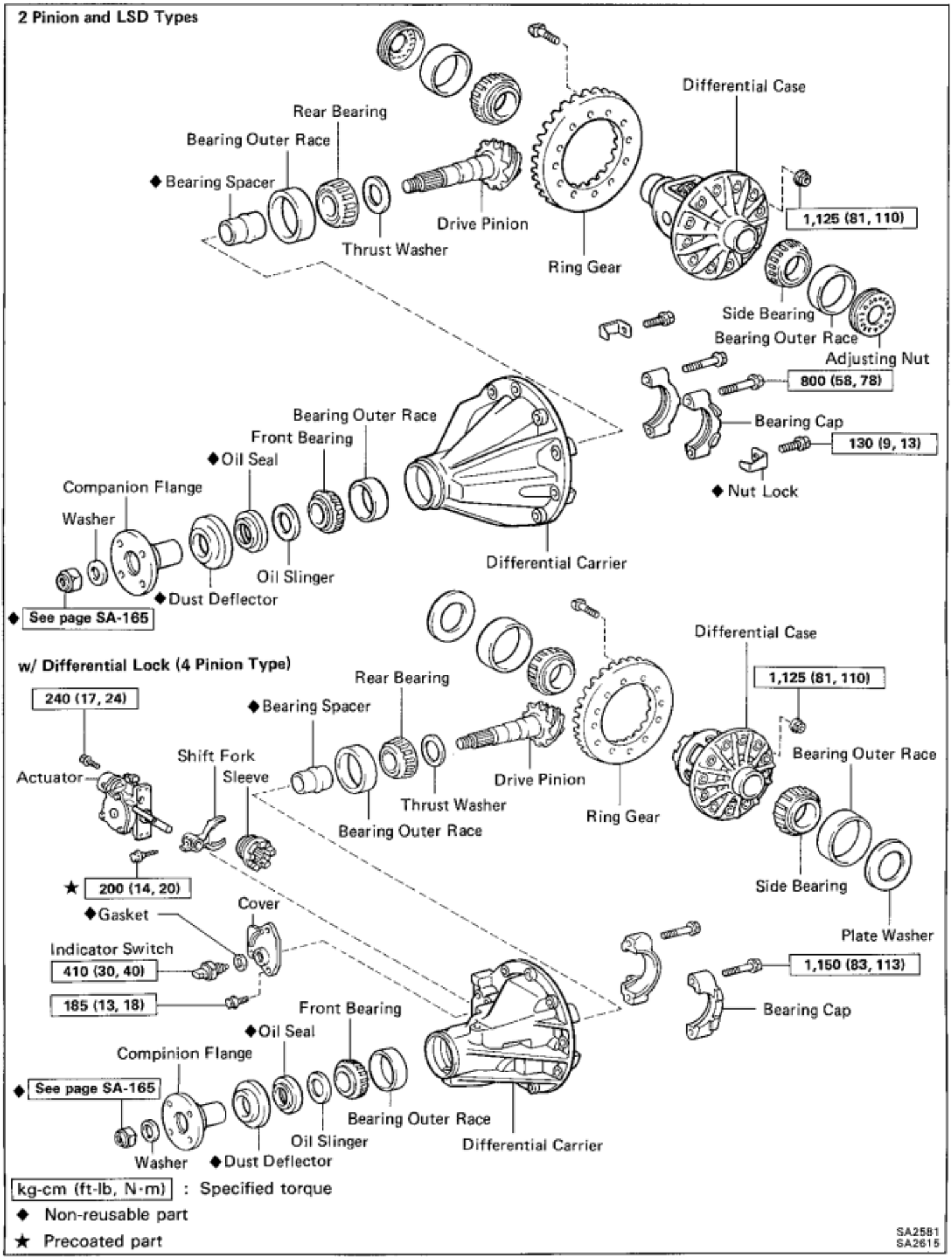

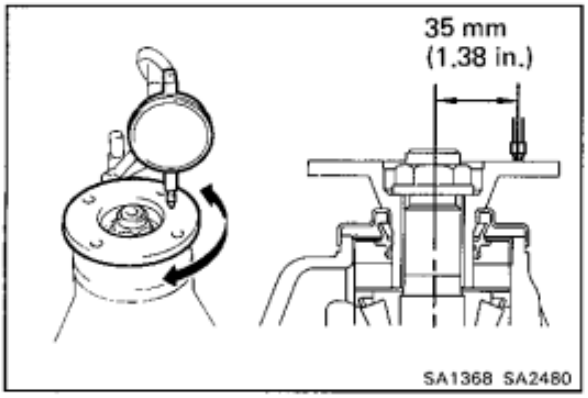

INSPECTION OF DIFFERENTIAL CARRIER

1. CHECK RUNOUT OF COMPANION FLANGE

Using a dial indicator, measure the vertical and lateral runout of the companion flange.

Maximum vertical runout: 0.10 mm (0.0039 in.)

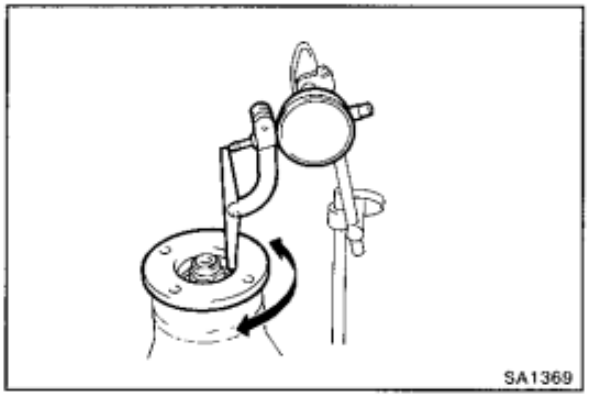

Maximum lateral runout: 0.10 mm (0.0039 in.)

If the runout is greater than the maximum, replace the companion flange.

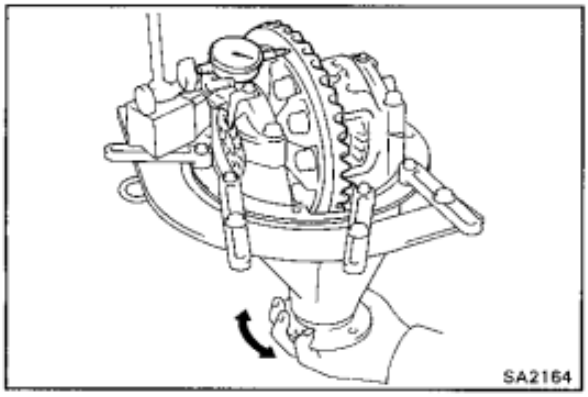

2. CHECK RING GEAR RUNOUT

If the runout is greater than maximum, replace the ring gear.

Maximum runout: 0.10 mm (0.0039 in.)

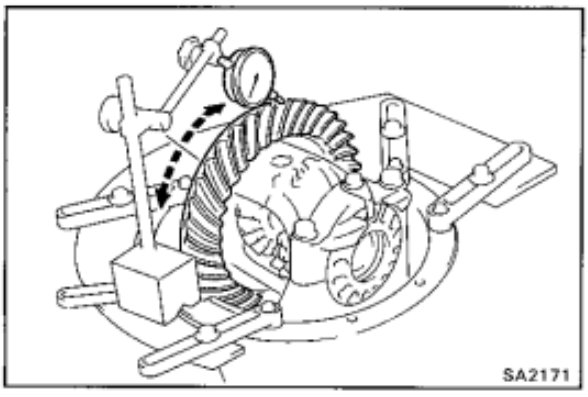

3. CHECK RING GEAR BACKLASH

If the backlash is not within specification, adjust the side bearing preload or repair as necessary.

Backlash: 0.15 — 0.20 mm (0.0059 — 0.0079 in.)

HINT: Perform the measurements at three or more positions around the circumference of the ring gear.

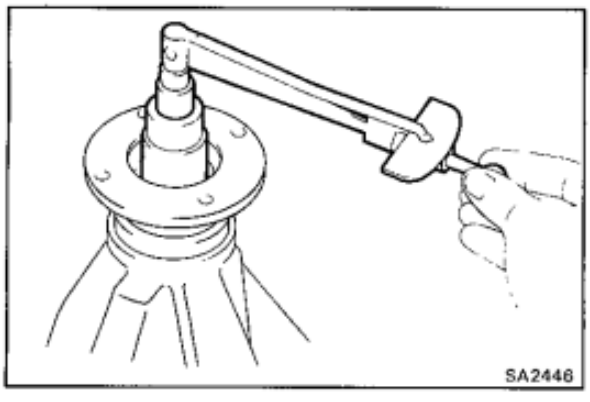

4. MEASURE DRIVE PINION PRELOAD

Measure the drive pinion preload using the backlash between the drive pinion and ring gear.

Preload (at starting): 7 — 10 kg-cm (6.1 — 8.7 in.-lb, 0.7 — 1.0 N·m)

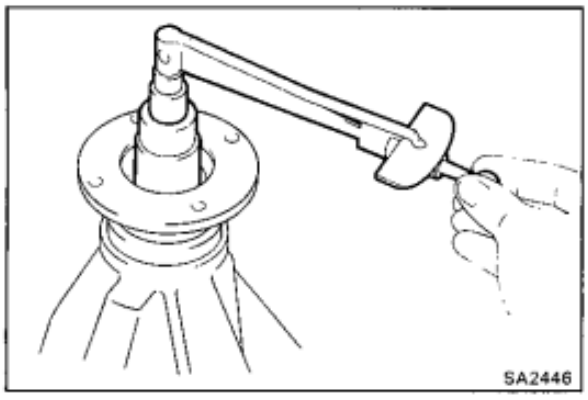

5. **CHECK TOTAL PRELOAD**

Using a torque meter, measure the total preload.

Total preload: In addition to drive pinion preload

2 pinion and LSD types
4 — 6 kg-cm (3.5 — 5.2 in.-lb, 0.4 — 0.6 N·m)

w/ Differential lock
3 — 7 kg-cm (2.6 — 6.1 in.-lb, 0.3 — 0.7 N·m)

If necessary, disassemble and inspect a differential.

2 Pinion Type

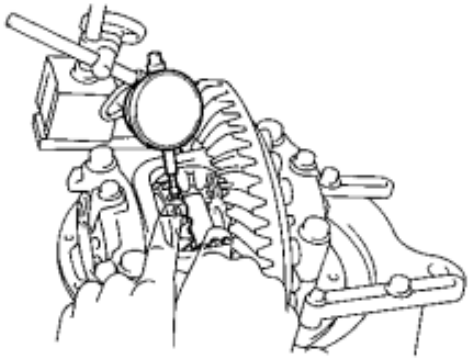

w/ Differential Lock

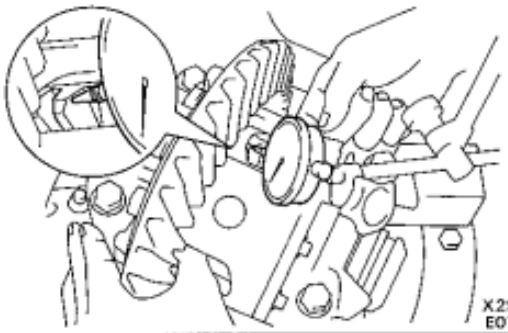

6. **CHECK SIDE GEAR BACKLASH**

Measure the side gear backlash while holding one pinion gear toward the case.

Standard backlash: 0.02 — 0.20 mm
(0.0008 — 0.0079 in.)

If the backlash is out of specification, install the correct thrust washers. (See pages SA-170, 173)

7. **INSPECT TEETH CONTACT BETWEEN RING GEAR AND DRIVE PINION**
(See step 14 on page SA-163)

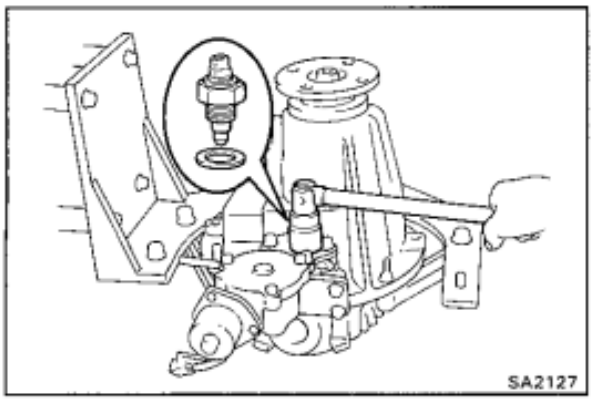

DISASSEMBLY OF DIFFERENTIAL CARRIER

(See page SA-146)

1. **(w/ DIFFERENTIAL LOCK)**
   REMOVE INDICATOR SWITCH

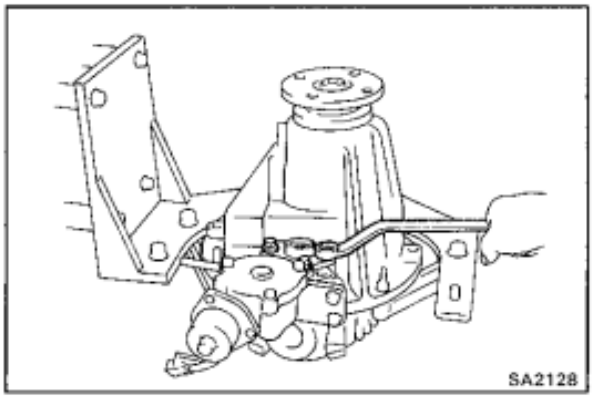

2. **(w/ DIFFERENTIAL LOCK)**
   REMOVE COVER
   (a) Remove the three bolts.

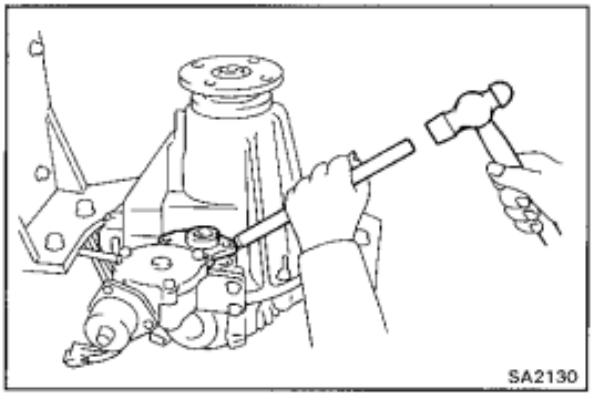

   (b) Using a brass bar and hammer, remove the cover.

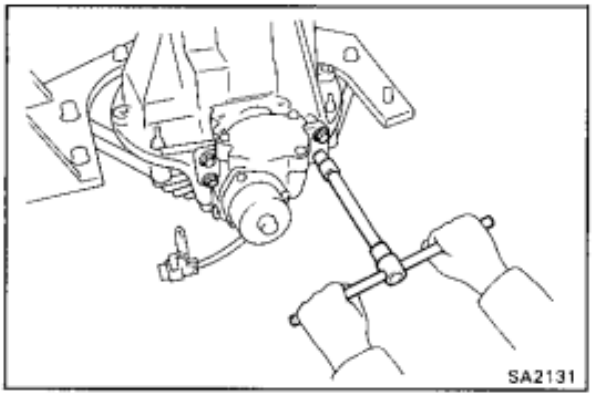

3. **(w/ DIFFERENTIAL LOCK)**
   REMOVE SLEEVE
   (a) Remove the four bolts.

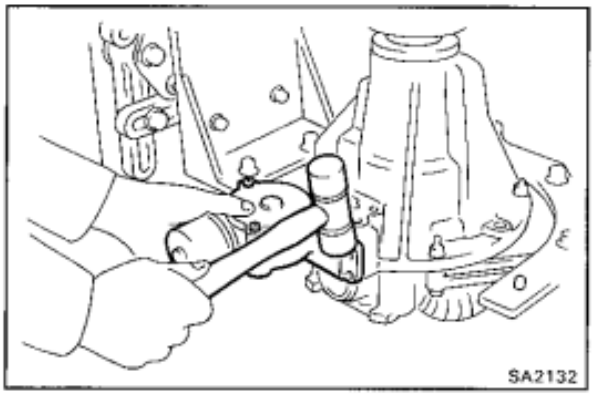

   (b) Using a plastic hammer, tap off the actuator.

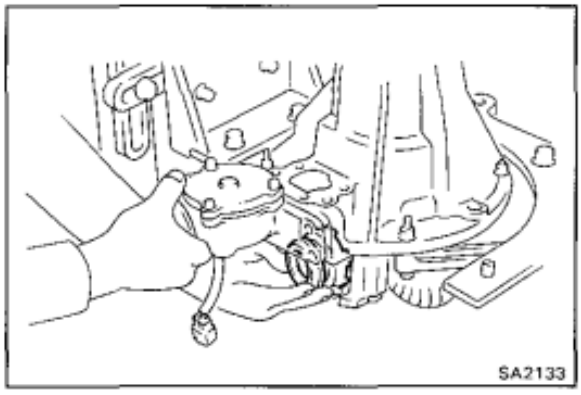

(c) Pull the actuator, remove the sleeve.

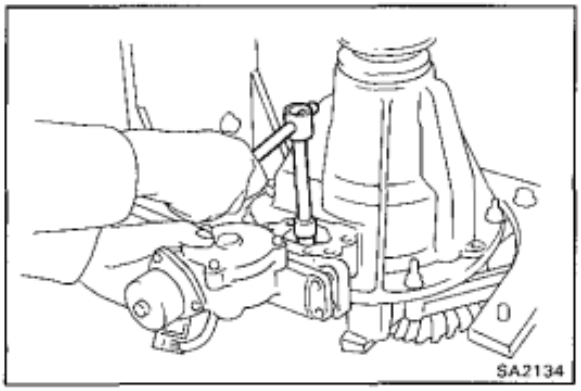

4. (w/ DIFFERENTIAL LOCK)
REMOVE ACTUATOR AND SHIFT FORK

(a) Remove the shift fork shaft bolt.

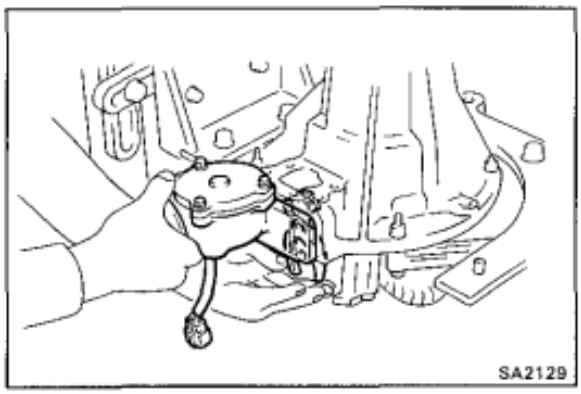

(b) Pull out the actuator, remove the shift fork.

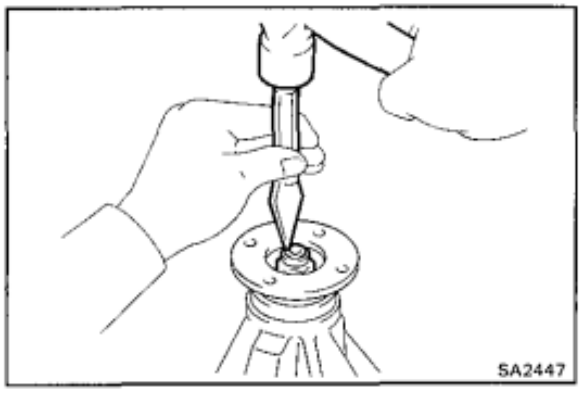

5. REMOVE COMPANION FLANGE

(a) Using a hammer and chisel, loosen the staked part of the nut.

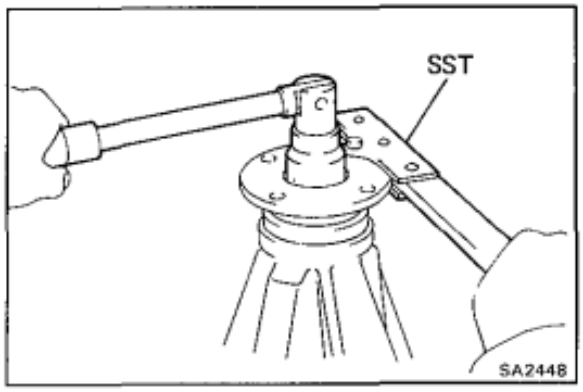

(b) Using SST to hold the flange, remove the nut and plate washer.

SST 09330-00021

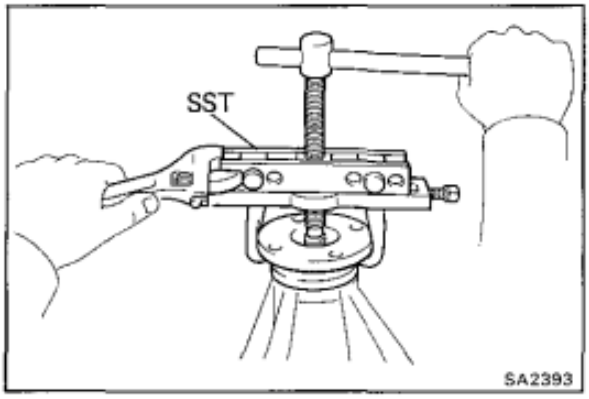

(c) Using SST, remove the companion flange.

SST 09950-20017

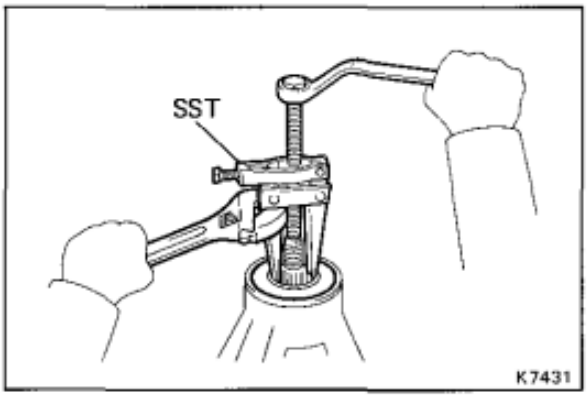

6. REMOVE FRONT OIL SEAL AND OIL SLINGER

(a) Using SST, remove the oil seal from the housing .

SST 09308-10010

(b) Remove the oil slinger.

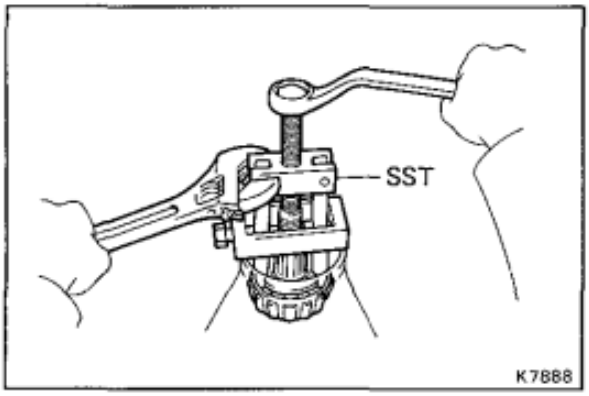

7. REMOVE FRONT BEARING

Using SST, remove the bearing from the housing.

SST 09556-22010

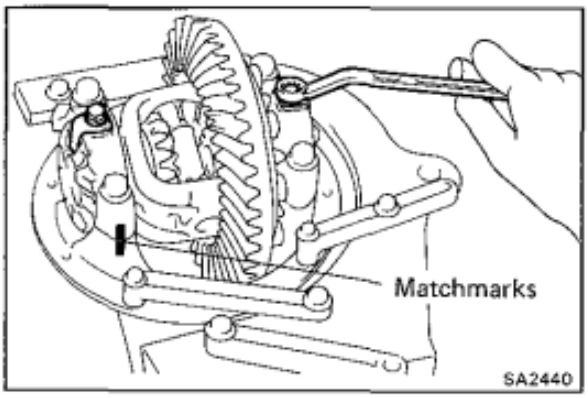

8. REMOVE DIFFERENTIAL CASE (2 PINION AND LSD TYPES)

(a) Place matchmarks on the bearing cap and differential carrier.

(b) Remove the two adjusting nut locks.

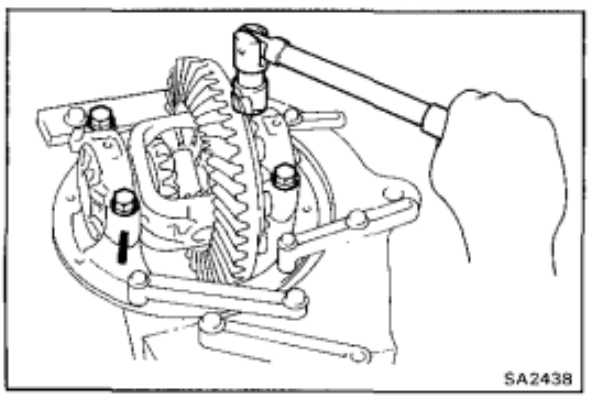

(c) Remove the four bolts and the two bearing caps.

(d) Remove the two adjusting nuts.

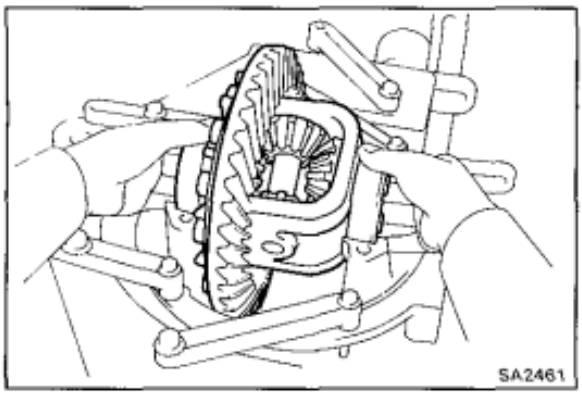
SA2461

(e) Remove the differential case with the side bearing outer races from the differential carrier.

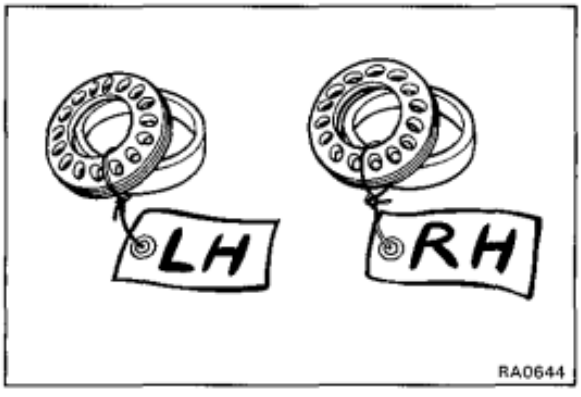

RA0644

HINT: Tag the disassembled parts to show the location for reassembly.

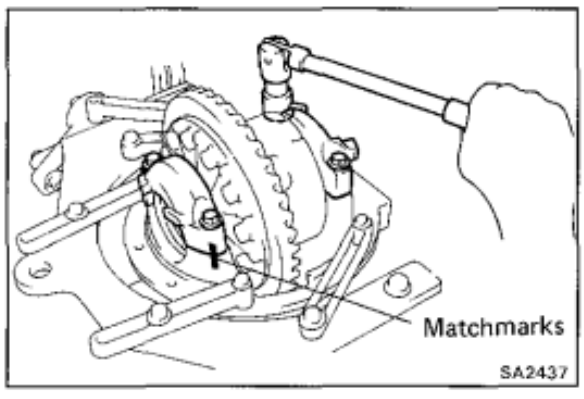

SA2437

(w/ DIFFERENTIAL LOCK)

(a) Place matchmarks on the bearing cap and differential carrier.

(b) Remove the four bolts and the two bearing caps.

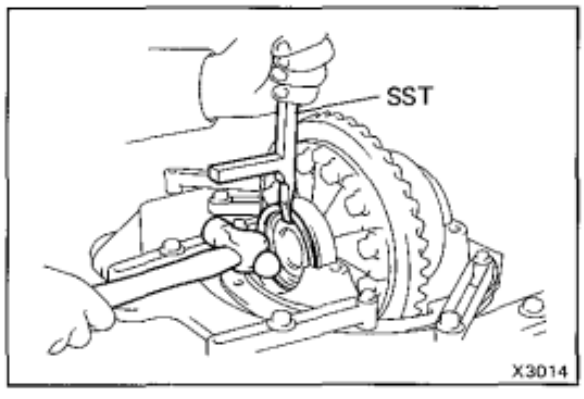

X3014

(c) Using SST, remove the plate washer.

SST 09504-22011

HINT: Measure the plate washer thickness and note it.

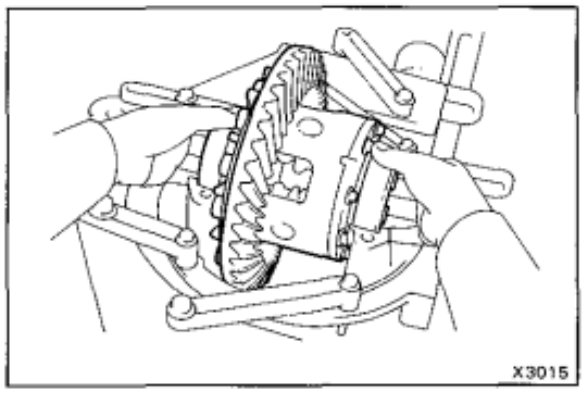
X3015

(d) Remove the differential case with the side bearing outer races from the differential carrier.

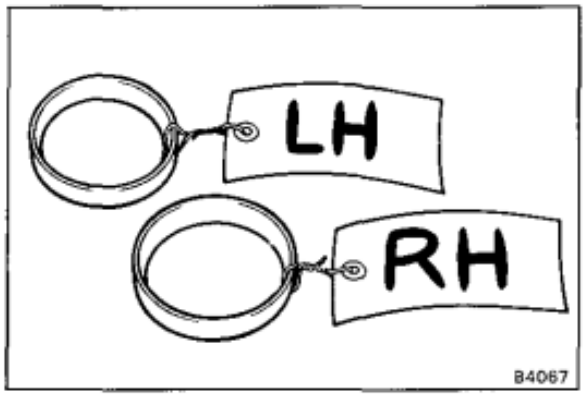

HINT: Tag the bearing outer races to show the location for reassembly.

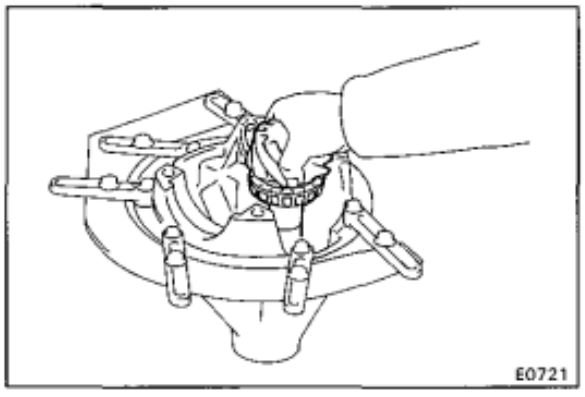

9. REMOVE DRIVE PINION AND BEARING SPACER

(a) Remove the drive pinion with the rear bearing.

(b) Remove the bearing spacer.

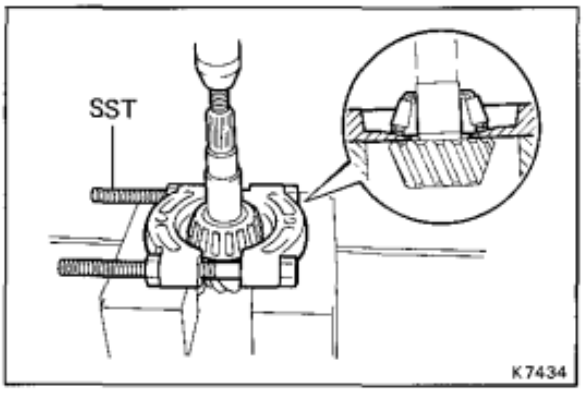

10. REMOVE DRIVE PINION REAR BEARING

(a) Using SST, press out the rear bearing from the drive pinion.

SST 09950-00020

HINT: If the drive pinion or ring gear are damaged replace them as a set.

(b) Remove the washer from the drive pinion.

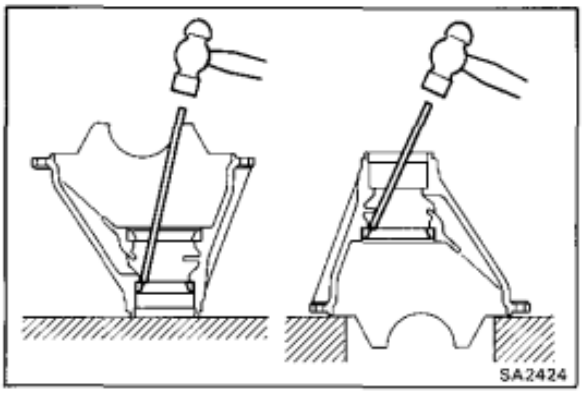

11. REMOVE FRONT AND REAR BEARING OUTER RACES

Using a hammer and brass bar, drive out the outer race from the carrier.

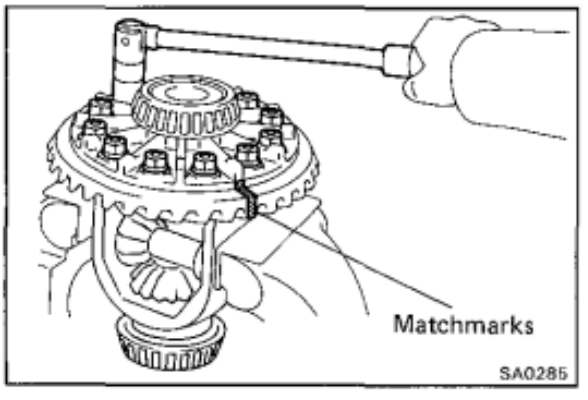

12. REMOVE RING GEAR

(a) Place matchmarks on the ring gear and differential case.

(b) Remove the twelve nuts and twelve bolts.

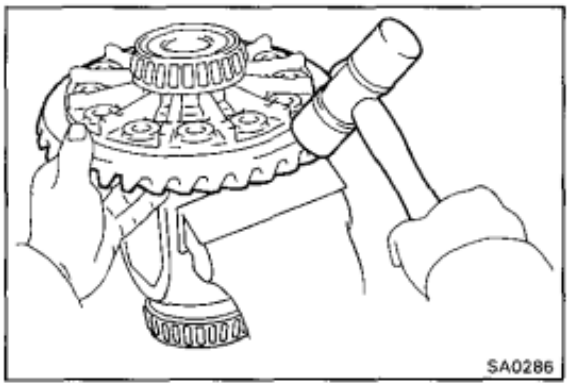

(c) Using a plastic hammer or copper hammer tap on the ring gear to separate it from differential case.

13. CHECK DIFFERENTIAL CASE RUNOUT

(a) Place the bearing outer races on their respective bearings. Check that the left and right outer races are not interchanged.

(b) Install the differential case in the differential carrier.

(c) When there is no play left in the side bearings, install the adjusting nuts.

(d) Align matchmarks on the bearing cap and differential carrier.

(e) Install and uniformly tighten the four bearing cap bolts in several passes.

(f) Using a dial indicator, measure the differential case runout.

Maximum runout: 0.07 mm (0.0028 in.)

(g) Remove the differential case.
(See step 8 on page SA-151)

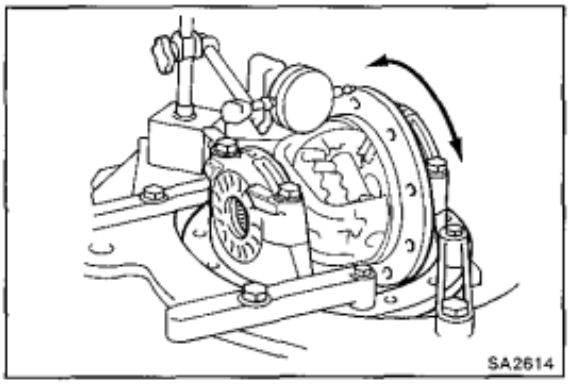

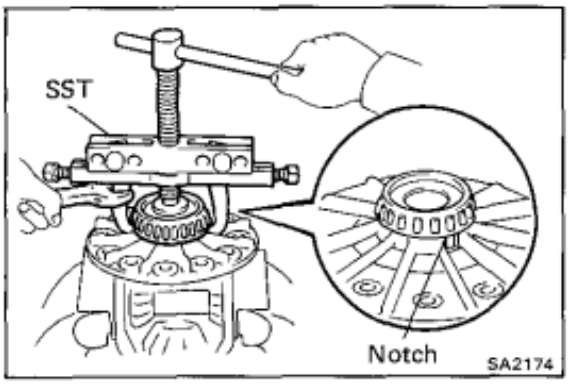

14. REMOVE SIDE BEARINGS (2 PINION AND LSD TYPES)

Using SST, remove the side bearing from the differential case.

SST 09950-20017

HINT: Fix the claws of SST to the notch in the differential case.

(w/ DIFFERENTIAL LOCK)

(a) Using SST, remove the side bearing (ring gear side) .

SST 09950-20017

HINT: Fix the claws of SST to the notch in the differential case.

(b) Using four bolts and SST, remove the side bearing (cover side).

SST 09550-10012 (09252-10010, 09557-10010)

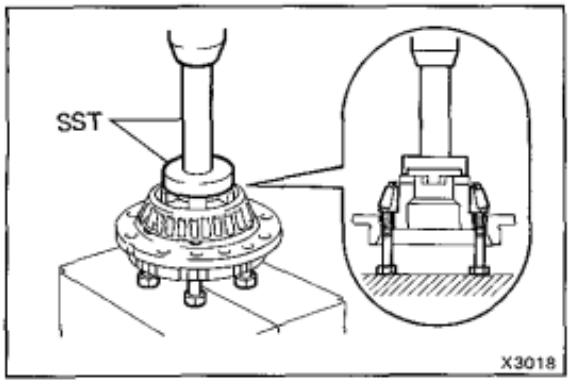

15. DISASSEMBLE DIFFERENTIAL CASE

2 pinion type: See page SA-169.
w/ Differential lock
(4 pinion type): See page SA-171.
LSD type: See page SA-174.

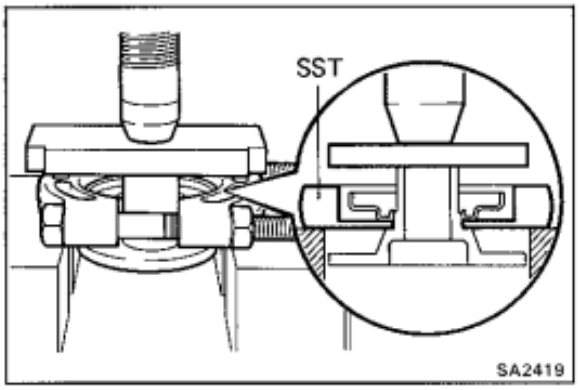

REPLACEMENT OF DIFFERENTIAL COMPONENTS

REPLACE COMPANION FLANGE DUST DEFLECTOR

(a) Using SST and a press, remove the dust deflector.

SST 09950-00020

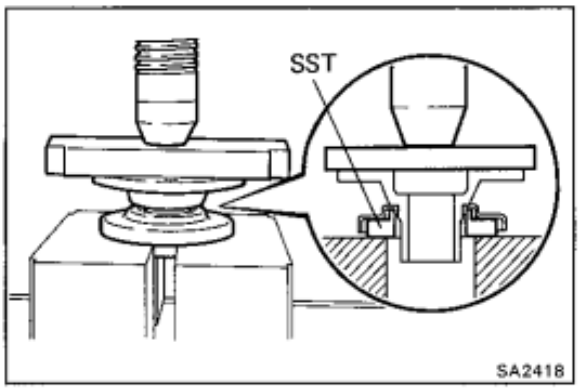

(b) Using SST and a press, install a new dust deflector .

SST 09726-40010

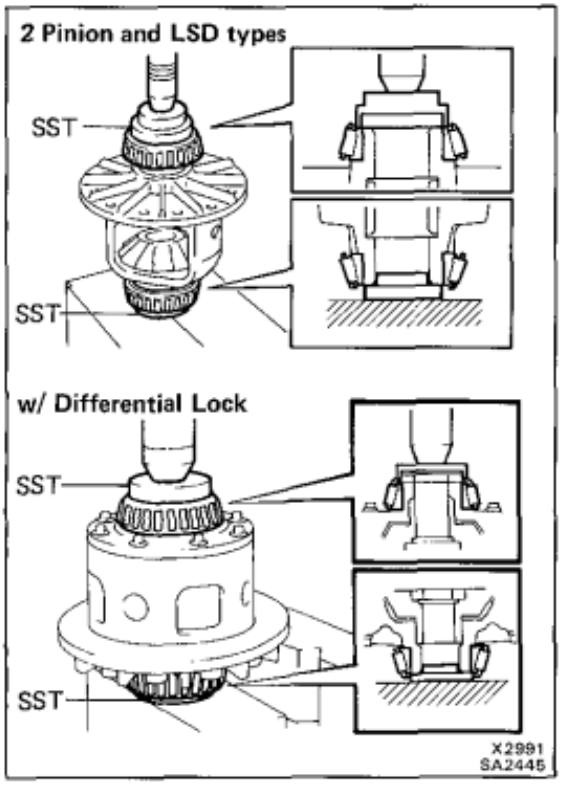

ASSEMBLY OF DIFFERENTIAL CARRIER

(See page SA-146)

1. INSTALL SIDE BEARINGS

Using SST and a press, install the two side bearings on the differential case.

SST 2 pinion and LSD types
09315-00021 and 09550-10012
(09558-10010)

w/ Differential lock (4 pinion type)
09550-60010 and 09550-10012
(09558-10010)

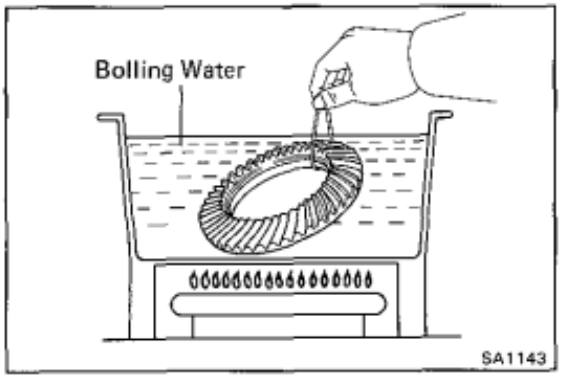

2. INSTALL RING GEAR ON DIFFERENTIAL CASE

(a) Clean the contact surfaces of the differential case and ring gear.

(b) Heat the ring gear in boiling water.

(c) After the moisture on the ring gear has completely evaporated, quickly install the ring gear to the differential case.

HINT: Align matchmarks on the ring gear and the differential case.

(d) Temporarily install the twelve nuts so that the bolt holes in the ring gear and differential case are not misaligned.

NOTICE:

- **The ring gear set bolts should not be tighten until the ring gear has cooled sufficiently.**
- **Install the bolts so that the taped part of the bolt is on the ring gear side.**

(e) After the ring gear has cooled sufficiently, torque the ring gear set nuts.

Torque: 1,125 kg-cm (81 ft-lb, 110 N·m)

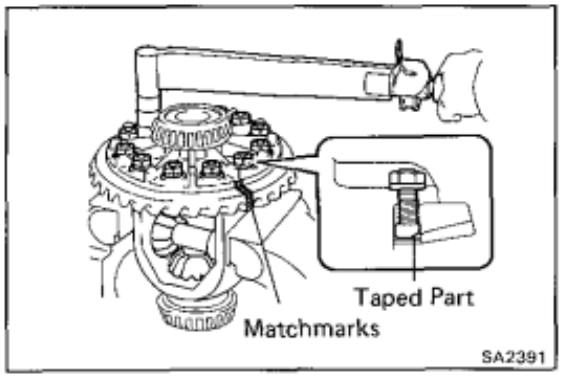

3. INSPECT RING GEAR RUNOUT

(a) Install the differential case onto the carrier.

(b) Install bearing caps. (See page SA-161)

(c) Using a dial indicator, measure the runout of ring gear.

Maximum runout: 0.10 mm (0.0039 in.)

(d) Remove the differential case.
(See step 8 on page SA-151)

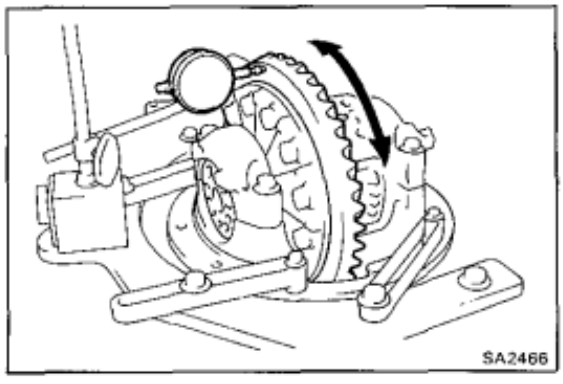

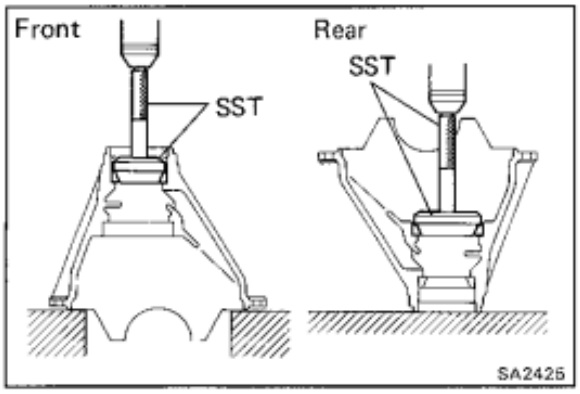

4. INSTALL DRIVE PINION FRONT AND REAR BEARING OUTER RACES

Using SST and a press, install the outer races.

SST 09608-35014

Front (09608-06020, 09608-06110)
Rear (09608-06020, 09608-06180)

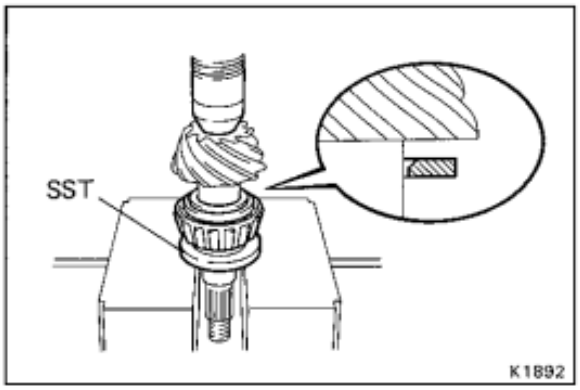

5. INSTALL DRIVE PINION REAR BEARING

(a) Install the washer on the drive pinion with the chamfered end facing the pinion gear.

HINT: First fit a washer with the same thickness as the washer which was removed, then after checking the teeth contact pattern, replace the washer with one of a different thickness if necessary.

(b) Using SST and a press, install the rear bearing to the drive pinion.

SST 09506-35010

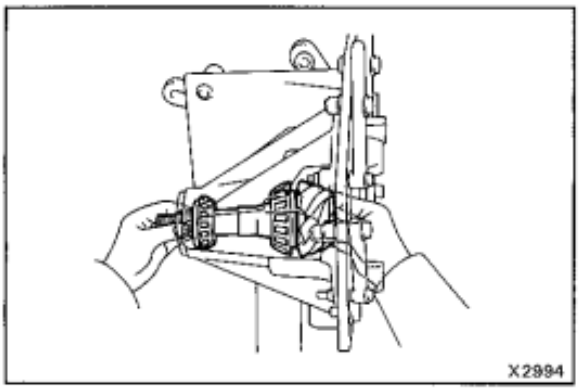

6. TEMPORARILY ADJUST DRIVE PINION PRELOAD

(a) Install the drive pinion, front bearing and oil slinger.

HINT: Assemble the spacer and oil seal after adjusting the teeth contact pattern.

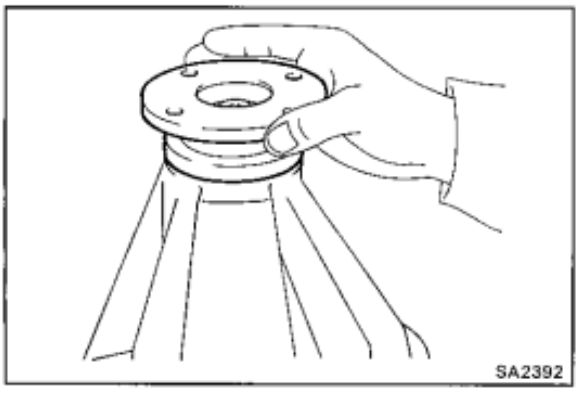

(b) Install the companion flange.

(c) Coat the threads of the nut with MP grease.

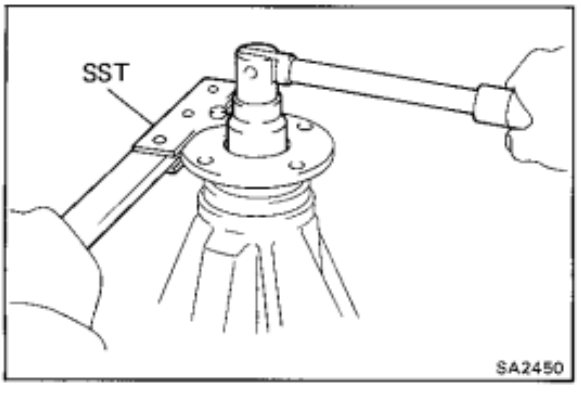

(d) Adjust the drive pinion preload by tightening the plate washer and companion flange nut.

HINT: Using SST to hold the flange, tighten the nut .

SST 09330-00021

NOTICE: As there is no spacer, tighten the nut a little at a time, being careful not to overtighten it.

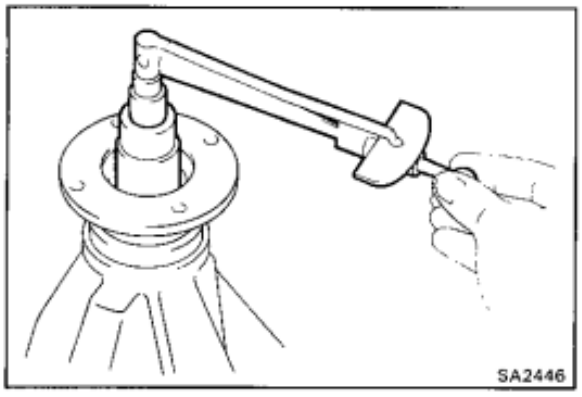

(e) Using a torque meter, measure the drive pinion preload.

Preload (at starting):

New bearing

13 — 20 kg-cm
(11.3 — 17.4 in.-lb, 1.3 — 2.0 N·m)

Reused bearing

7 — 10 kg-cm
(6.1 — 8.7 in.-lb, 0.7 — 1.0 N·m)

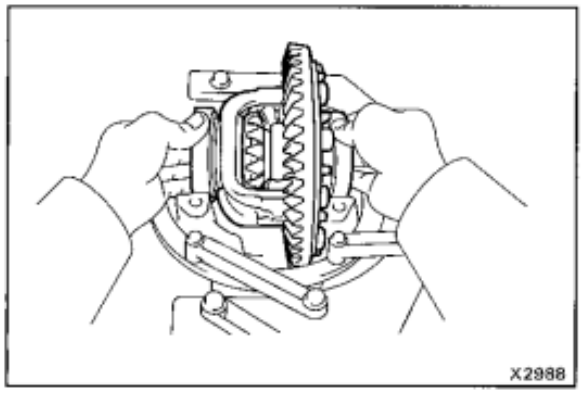

7. INSTALL DIFFERENTIAL CASE IN CARRIER (2 PINION AND LSD TYPES)

(a) Place the bearing outer races on their respective bearings. Make sure that the left and right outer races are not interchanged.

(b) Install the case in the carrier.

HINT: Make sure that there is backlash between the ring gear and drive pinion.

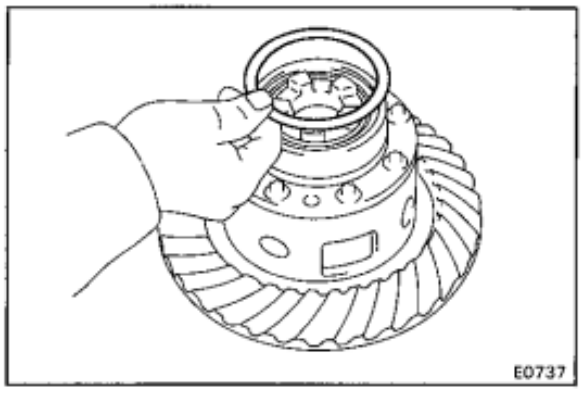

(w/ DIFFERENTIAL LOCK)

(a) Place the bearing outer races on their respective bearings. Make sure the left and right races are not interchanged.

(b) Install the assembled plate washer onto the side bearing.

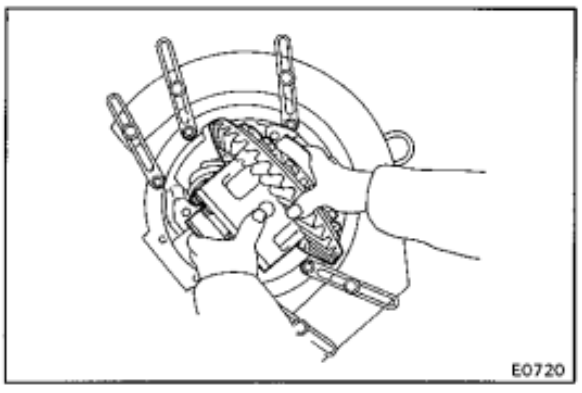

(c) Install the differential case in the carrier.

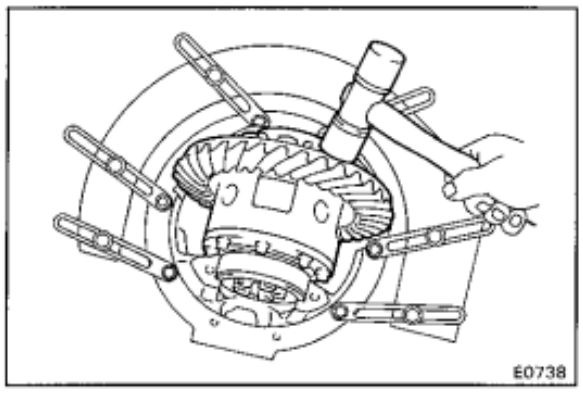

(d) Snug down the washer and bearing by tapping on the ring gear with a plastic hammer.

HINT: If it is difficult to install the differential case into the carrier, replace the plate washer with a thinner one. However, select a plate washer that allows no clearance between it and the carrier.

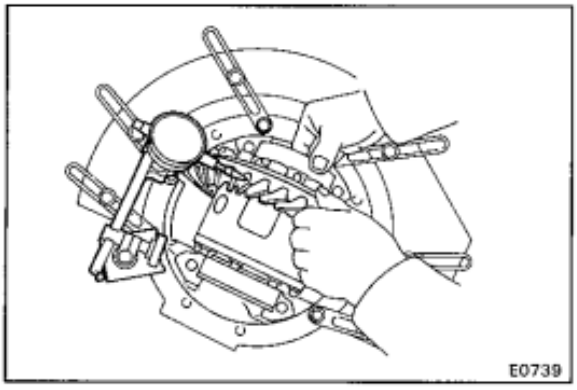
E0739

8. **(w/ DIFFERENTIAL LOCK)**
ADJUST RING GEAR BACKLASH

(a) Hold the side bearing of the ring gear side and measure the backlash.

Backlash (reference): 0.15 mm (0.0059 in.)

(b) Select a case cover side plate washer using the backlash as reference.

Side plate washer thickness

Mark	Thickness mm (in.)	Mark	Thickness mm (in.)	Mark	Thickness mm (in.)	Mark	Thickness mm (in.)
1	2.67 (0.1051)	7	2.85 (0.1122)	13	3.03 (0.1193)	19	3.21 (0.1264)
2	2.70 (0.1063)	8	2.88 (0.1134)	14	3.06 (0.1205)	20	3.24 (0.1276)
3	2.73 (0.1075)	9	2.91 (0.1146)	15	3.09 (0.1217)	21	3.27 (0.1287)
4	2.76 (0.1087)	10	2.94 (0.1157)	16	3.12 (0.1228)	22	3.30 (0.1299)
5	2.79 (0.1098)	11	2.97 (0.1169)	17	3.15 (0.1240)	23	3.33 (0.1311)
6	2.82 (0.1110)	12	3.00 (0.1181)	18	3.18 (0.1252)		

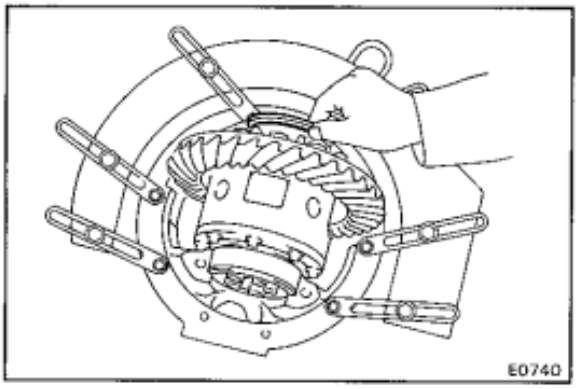
E0740

(c) Select a ring gear side plate washer of a thickness which eliminates any clearance between the plate washer and carrier.

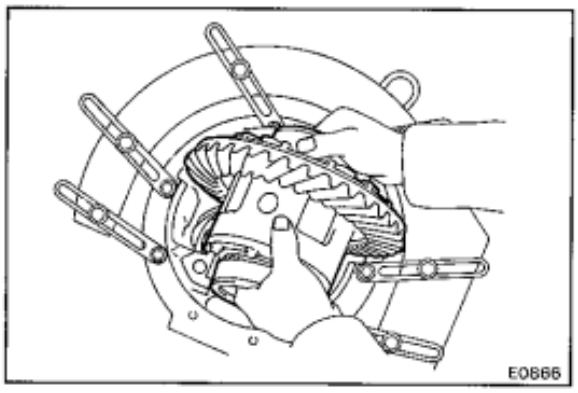
E0866

(d) Remove the plate washers and differential case.

(e) Install the plate washer into the lower part of the carrier.

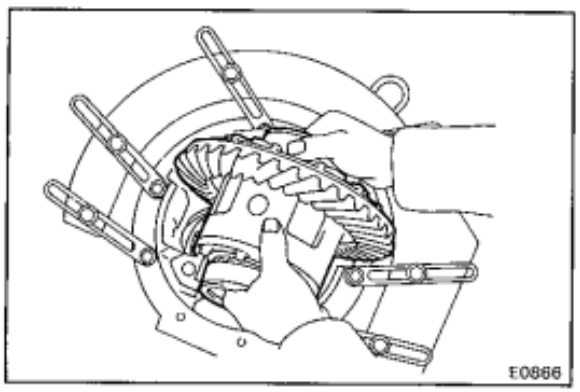
E0866

(f) Place the plate washer onto the differential case together with the outer race, and install the differential case with the outer race into the carrier.

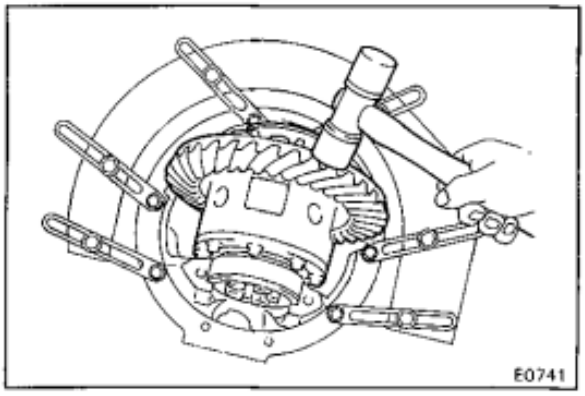

(g) Using a plastic hammer, snug down the washer and bearing by tapping the ring gear.

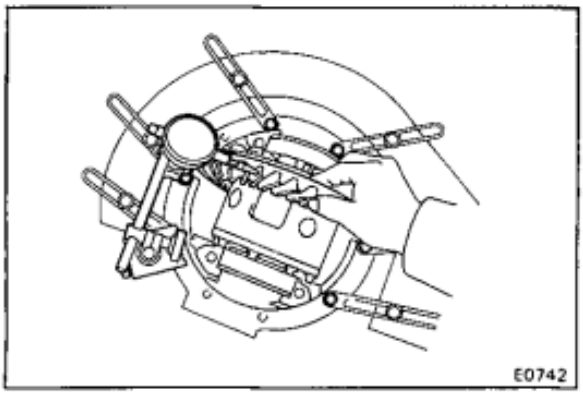

(h) Measure the ring gear backlash.

Backlash: 0.15 — 0.20 mm (0.0059 — 0.0079 in.)

If not within specification, adjust by either increasing or decreasing the number of washers on both sides by an equal amount.

HINT: There should be no clearance between the plate washer and case.

Insure that there is ring gear backlash.

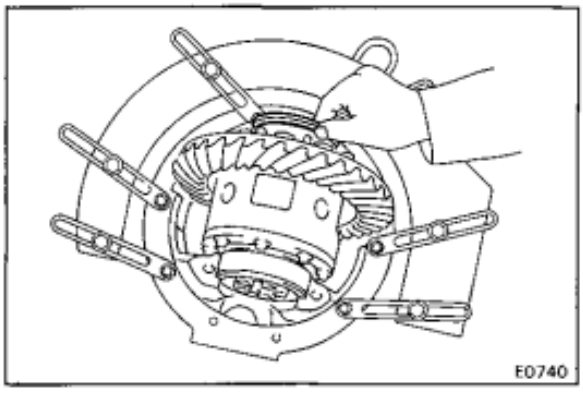

9. (w/ DIFFERENTIAL LOCK)
ADJUST SIDE BEARING PRELOAD

(a) After adjustment with the backlash as reference, remove the ring gear side plate washer.

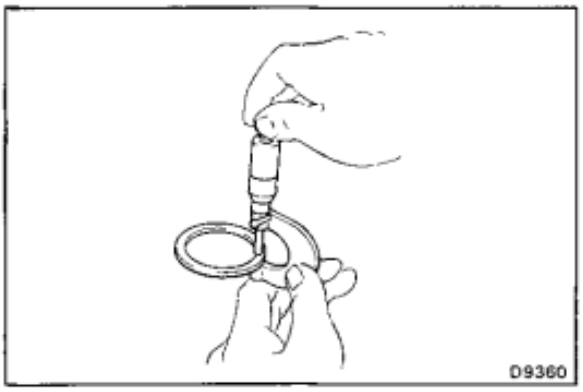

(b) Measure the thickness of the removed plate washer.

(c) Install a new thicker washer of 0.06 — 0.09 mm (0.0024 — 0.0035 in.) than the washer removed.

HINT: Select a washer which can be pressed in 2/3 of the way with finger.

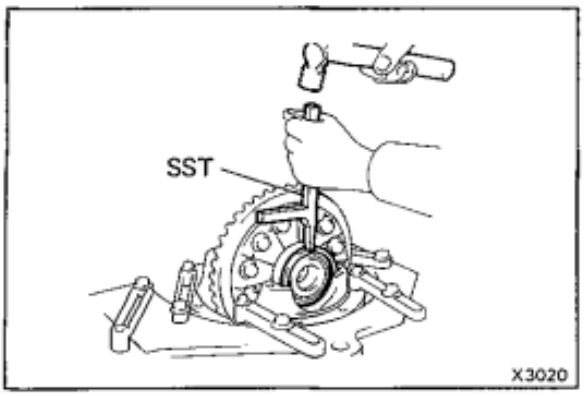

(d) Using SST, tap in the plate washer.

SST 09504-22011

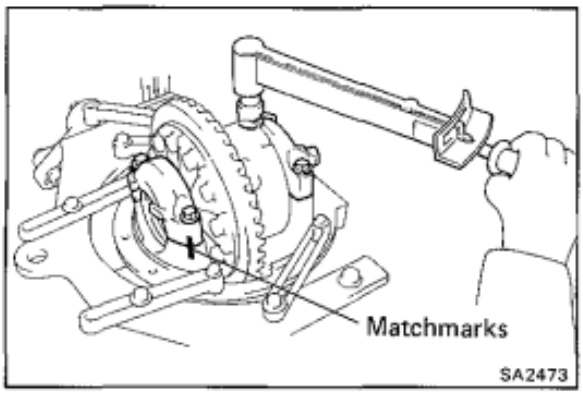

(e) Align matchmarks on the cap and carrier. Tighten the four bearing cap bolts to the specified torque.

Torque: 1,150 kg-cm (83 ft-lb, 113 N·m)

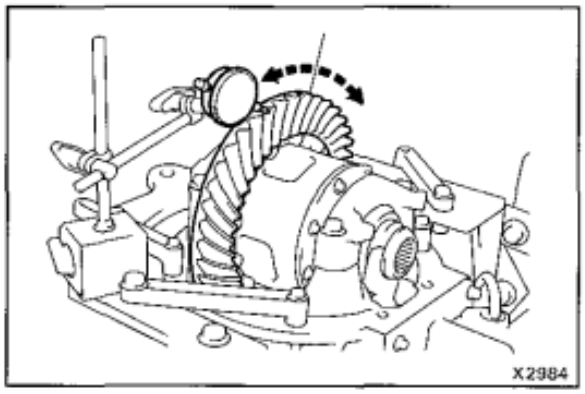

(f) Using a dial indicator, adjust the ring gear backlash until it is within specification.

Backlash: 0.15 — 0.20 mm (0.0059 — 0.0079 in.)

If not within standard, follow the procedure listed below.

If backlash is greater than specification:

Replace the cover side washer with a thinner washer. When doing so replace the ring gear side plate washer with one having a thickness equaling the amount the cover side plate washer thickness was decreased.

If backlash is less than specification:

Replace the cover side plate washer with a thicker washer. When doing so replace the ring gear side plate washer with one having a thinness equaling the amount the cover side plate washer thickness was increased.

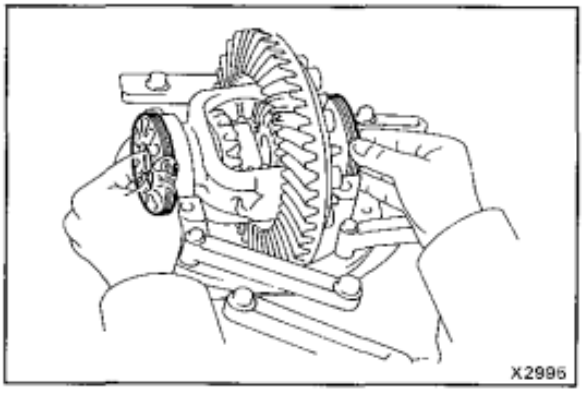

10. (2 PINION AND LSD TYPES) INSTALL ADJUSTING NUTS

Install the adjusting nuts on the carrier, making sure that the nuts are threaded properly.

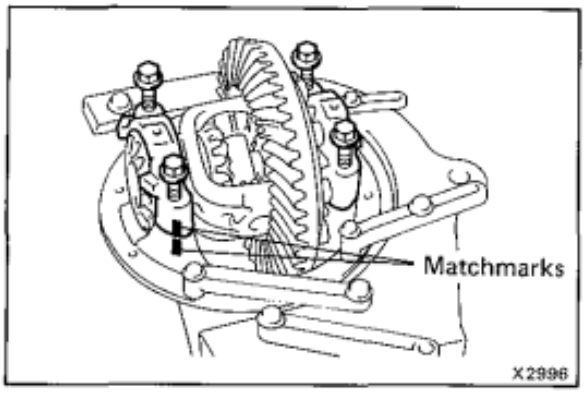

11. (2 PINION AND LSD TYPES) INSTALL BEARING CAPS

Align matchmarks on the cap and carrier. Screw in the two bearing cap bolts two or three turns and press down the bearing cap by hand.

HINT: If the bearing cap does not fit tightly on the carrier, the adjusting nuts are not threaded properly. Reinstall the adjusting nuts if necessary.

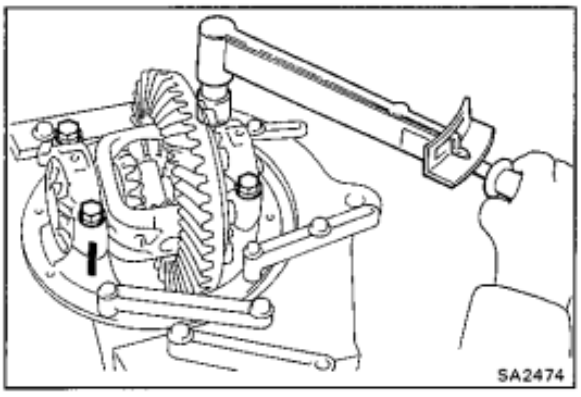

12. **(2 PINION AND LSD TYPES)**
ADJUST SIDE BEARING PRELOAD

(a) Tighten the four bearing cap bolts to the specified torque, then loosen them to the point where they can be turned by hand.

Torque: 800 kg-cm (58 ft-lb, 78 N·m)

(b) Fully tighten the four bearing cap bolts by hand.

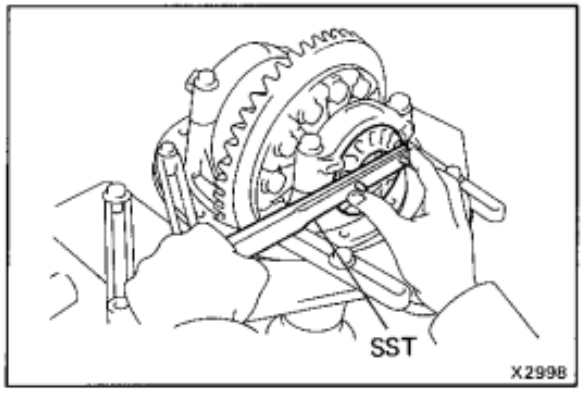

(c) Using SST, tighten the adjusting nut on the ring gear side until the ring gear has a backlash of about 0.2 mm (0.008 in.).

SST 09504-00011

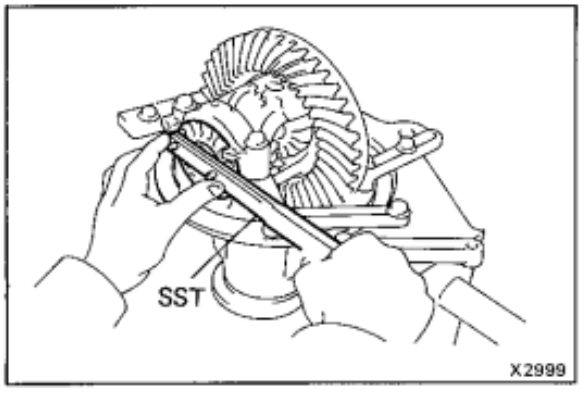

(d) While turning the ring gear, use SST to fully tighten the adjusting nut on the drive pinion side. After the bearings are settled, loosen the adjusting nut on the drive pinion side.

SST 09504-00011

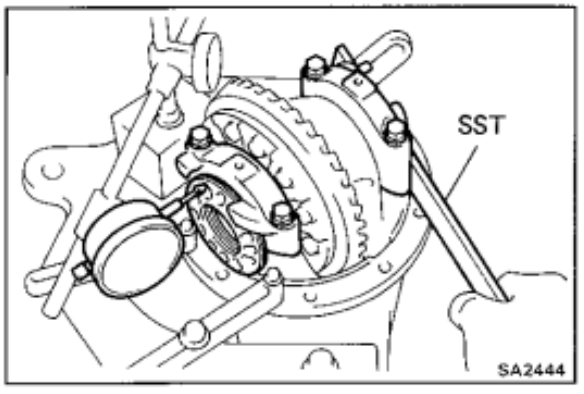

(e) Place a dial indicator on the top of the adjusting nut on the ring gear side.

(f) Adjust the side bearing for zero preload by tightening the other adjusting nut until the pointer on the indicator begins to move.

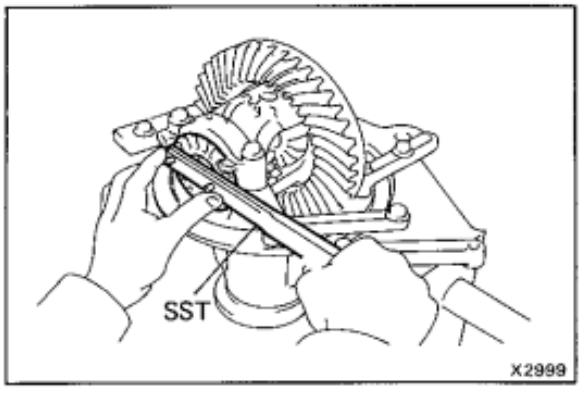

(g) Tighten the adjusting nut 1 - 1 1/2 notches from the zero preload position.

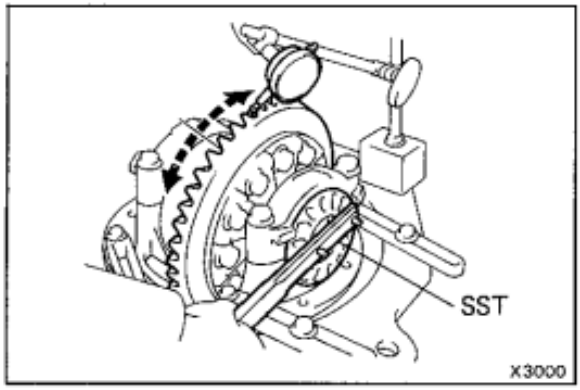

(h) Using a dial indicator, adjust the ring gear backlash until it is within specification.

Backlash: 0.15 — 0.20 mm (0.0059 — 0.0079 in.)

HINT: The backlash is adjusted by turning the left and right adjusting nuts equal amounts. For example, loosen the nut on the left side one notch and tighten the nut on the right side one notch.

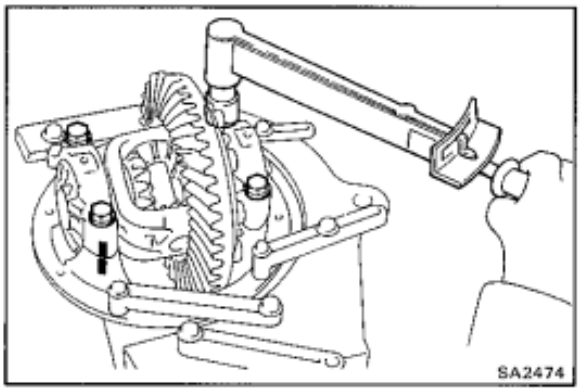

(i) Torque the bearing cap bolts.

Torque: 800 kg-cm (58 ft-lb, 78 N·m)

(j) Recheck the ring gear backlash.

Backlash: 0.15 — 0.20 mm (0.0059 — 0.0079 in.)

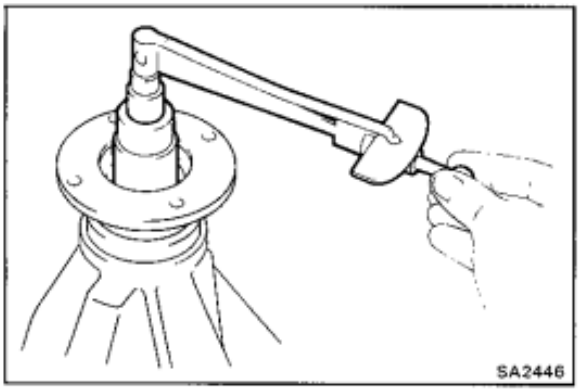

13. MEASURE TOTAL PRELOAD

Using a torque meter, measure the total preload.

Total preload: In addition to drive pinion preload

2 pinion and LSD types

4 — 6 kg-cm (3.5 — 5.2 in.-lb, 0.4 — 0.6 N·m)

w/ Differential lock

3 — 7 kg-cm (2.6 — 6.1 in.-lb, 0.3 — 0.7 N·m)

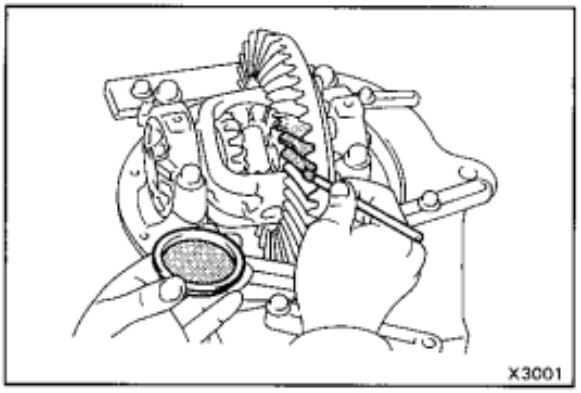

14. INSPECT TEETH CONTACT BETWEEN RING GEAR AND DRIVE PINION

(a) Coat 3 or 4 teeth at three different positions on the ring gear with red lead.

(b) Hold the companion flange firmly and rotate the ring gear in both directions.

(c) Inspect the teeth pattern.

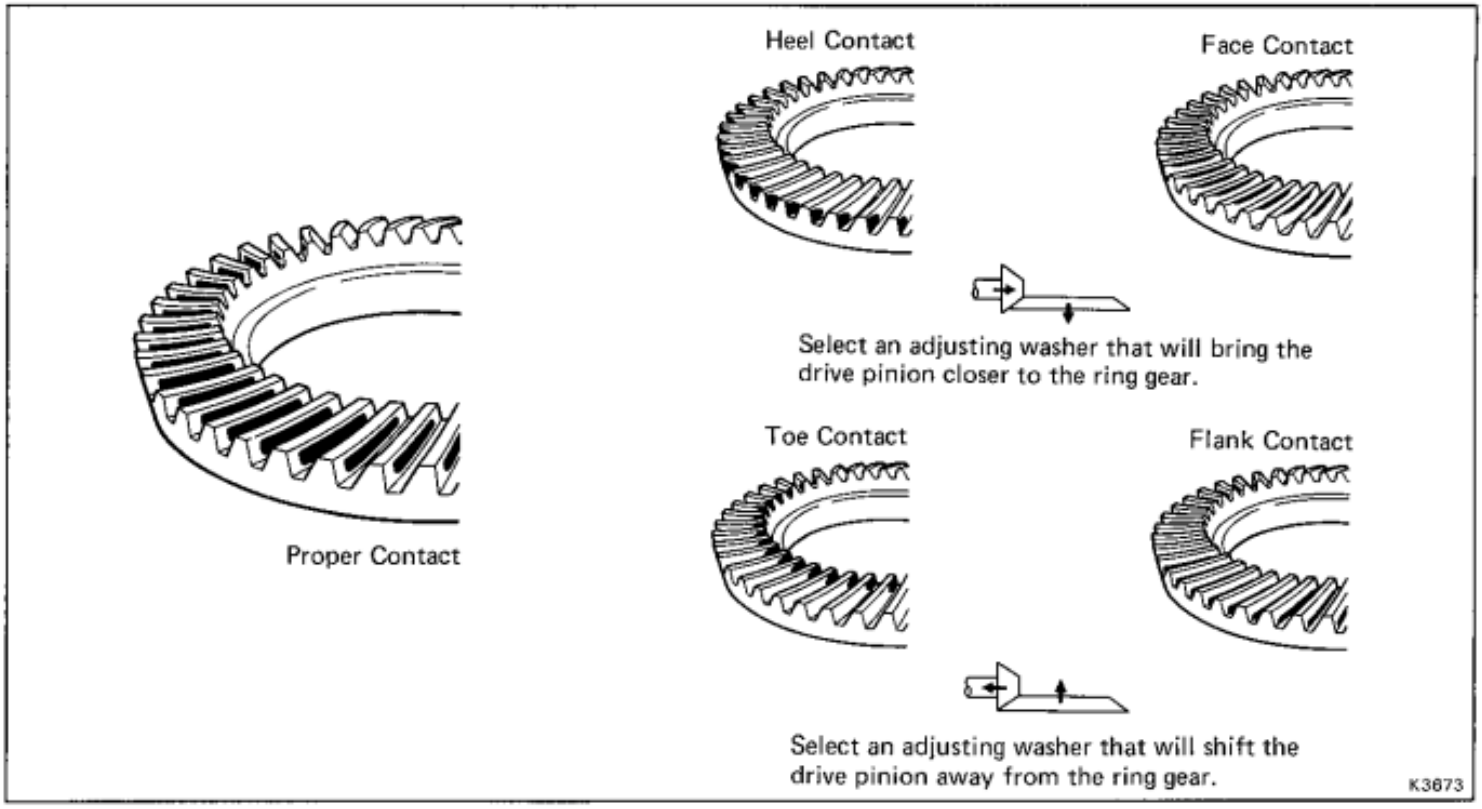

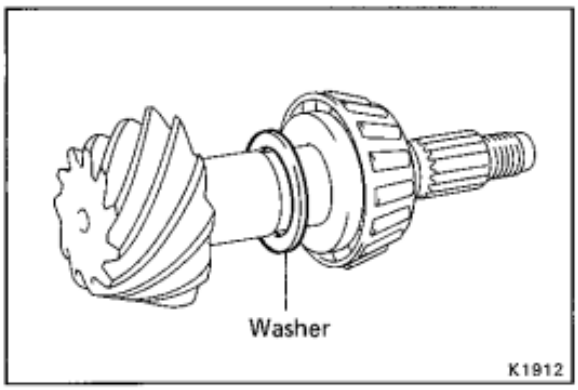

If the teeth are not contacting properly, use the following chart to select a proper washer for correction.

Washer thickness mm (in.)	
1.05 (0.0413)	1.35 (0.0531)
1.10 (0.0433)	1.40 (0.0551)
1.15 (0.0453)	1.45 (0.0571)
1.20 (0.0472)	1.50 (0.0591)
1.25 (0.0492)	1.55 (0.0610)
1.30 (0.0512)	

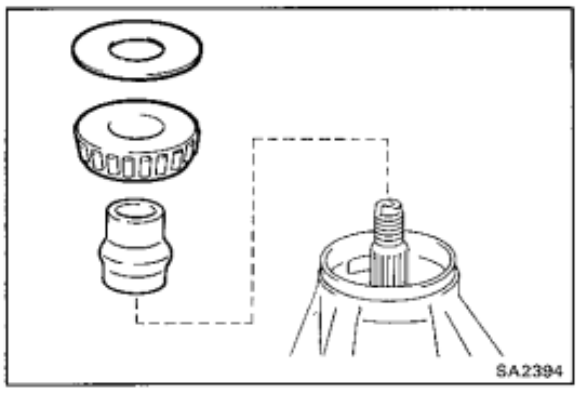

15. INSTALL BEARING SPACER

(a) Remove the companion flange.
(See step 5 on page SA-150)

(b) Remove the oil slinger and front bearing.
(See steps 6,7 on page SA-151)

(c) Install a new bearing spacer.

(d) Install the front bearing and oil slinger.

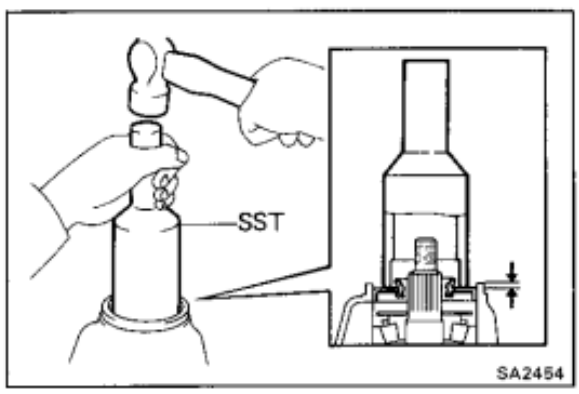

16. INSTALL OIL SEAL

(a) Using SST and a hammer, install a new oil seal.

SST 09214-76011

Oil seal drive in depth: 1.0 mm (0.0039 in.)

(b) Coat the lip of oil seal with MP grease.

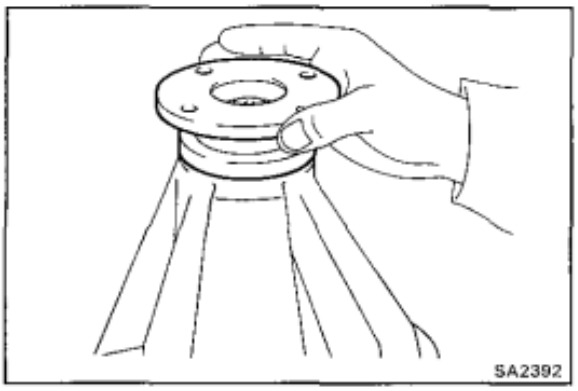

17. INSTALL COMPANION FLANGE

(a) Install the companion flange.

(b) Install the plate washer and a new nut.

HINT: Coat the threads of nut with gear oil.

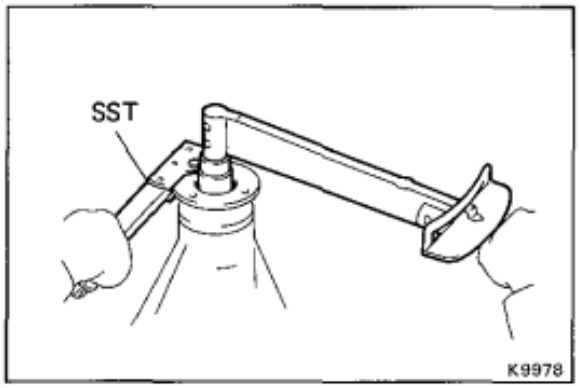

(c) Using SST to hold the flange, tighten the nut.

SST 09330-00021

Torque: 2,500 kg-cm (181 ft-lb, 245 N·m)

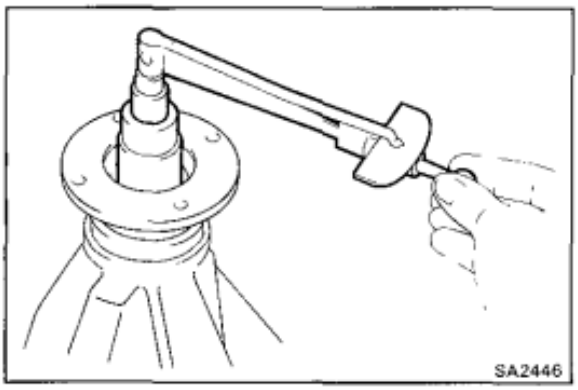

18. ADJUST DRIVE PINION PRELOAD

Using a torque meter, measure the preload of the backlash between the drive pinion and ring gear.

Preload (at starting):

New bearing

13 — 20 kg-cm
(11.3 — 17.4 in.-lb, 1.3 — 2.0 N·m)

Reused bearing

7 — 10 kg-cm
(6.1 — 8.7 in.-lb, 0.7 — 1.0 N·m)

- If the preload is greater than specification, replace the bearing spacer.
- If the preload is less than specification, retighten the nut 130 kg-cm (9 ft-lb, 13 N·m) a little at a time until the specified preload is reached.

If the maximum torque is exceeded while retightening the nut, replace the bearing spacer and repeat the preload procedure. Do not back off the pinion nut to reduce the preload.

Maximum torque: 4,500 kg-cm (326 ft-lb, 441 N·m)

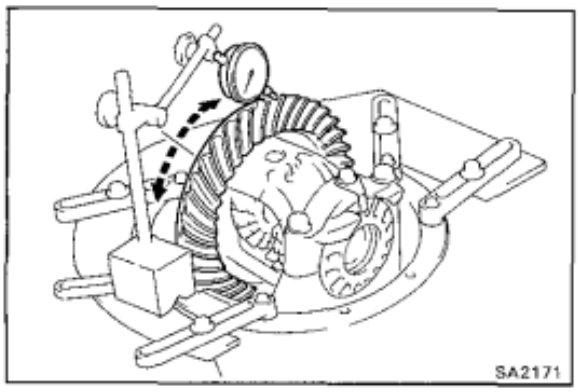

19. RECHECK RING GEAR BACKLASH
(See step 3 on page SA-147)

Backlash: 0.15 — 0.20 mm (0.0059 — 0.0079 in.)

20. RECHECK TEETH CONTACT BETWEEN RING GEAR AND DRIVE PINION
(See step 14 on page SA-163)

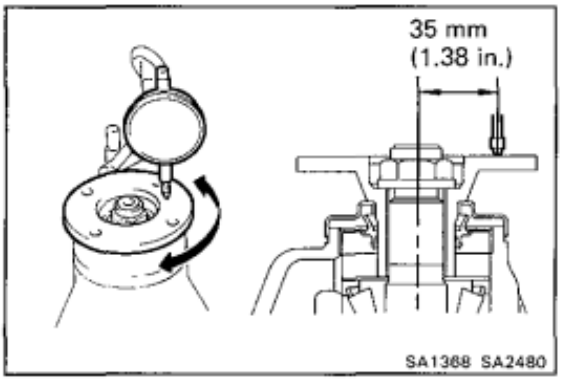

21. CHECK RUNOUT OF COMPANION FLANGE

Using a dial indicator, measure the vertical and lateral runout of the companion flange.

Maximum vertical runout: 0.10 mm (0.0039 in.)

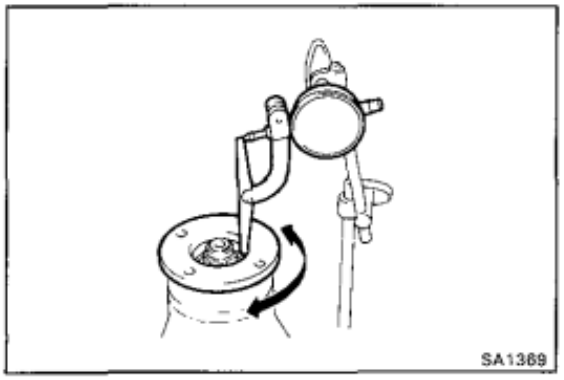

Maximum lateral runout: 0.10 mm (0.0039 in.)

If the runout is greater than the maximum, inspect the bearing.

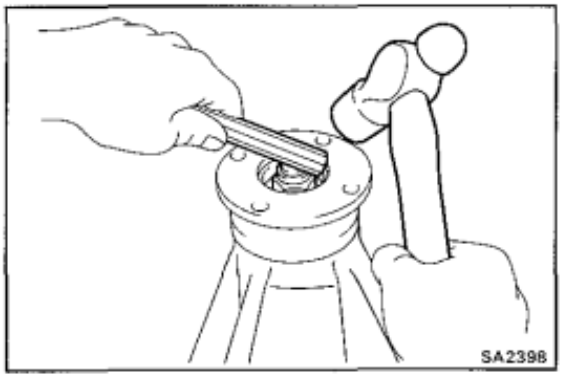

22. STAKE DRIVE PINION NUT

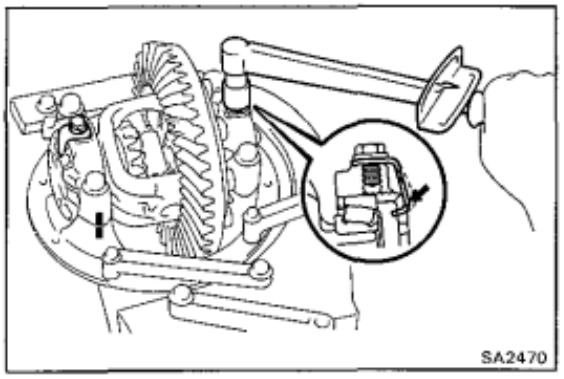

23. (2 PINION AND LSD TYPES)
INSTALL ADJUSTING NUT LOCKS

(a) Install two new lock nuts on the bearing caps.

Torque: 130 kg-cm (9 ft-lb, 13 N·m)

(b) After tightening the bolts, bend the nut locks.

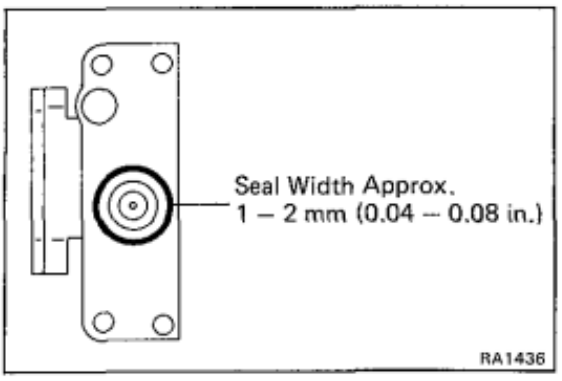

24. (w/ DIFFERENTIAL LOCK)
INSTALL ACTUATOR, SHIFT FORK AND SLEEVE

(a) Clean contacting surfaces of any residual packing material using gasoline or alcohol.

(b) Apply seal packing to the actuator.

Seal packing: Part No. 08826-00090, THREE BOND 1281 or equivalent

HINT: Install the actuator within ten minutes after applying seal packing.

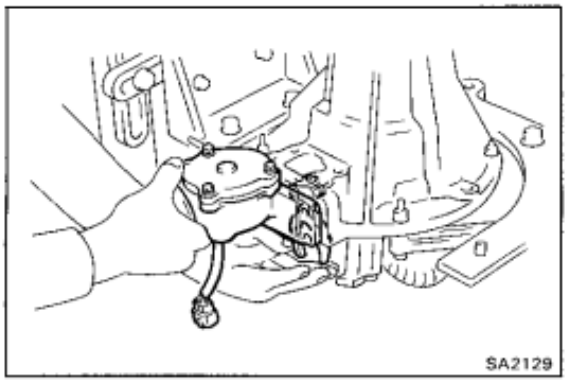
SA2129

(c) Install the actuator to the differential and match the shaft with the shaft fork hole.

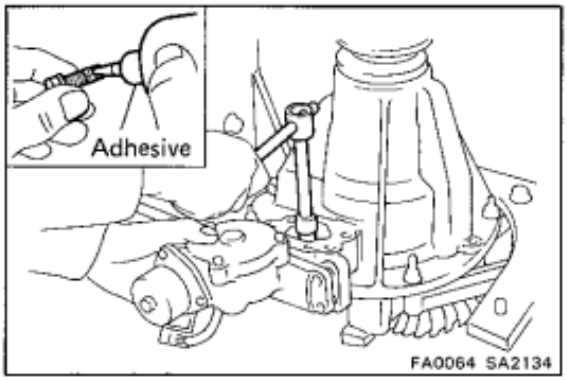

FA0064 SA2134

(d) Clean the threads of the set bolt and fork shaft with the white gasoline.

Coat the threads of the set bolt with adhesive.

Adhesive: Part No. 08833-00070, THREE BOND 1324 or equivalent

(e) Tighten the shift fork shaft set bolt.

Torque: 200 kg-cm (14 ft-lb, 20 N·m)

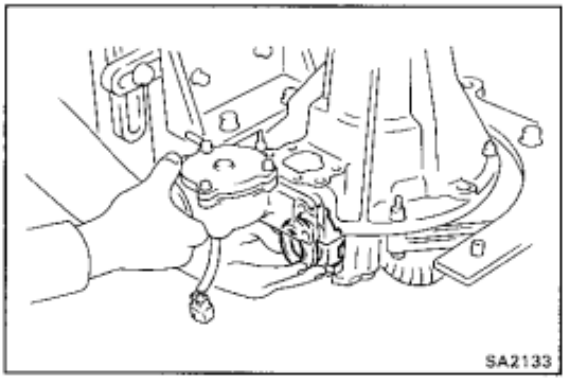
SA2133

(f) Engage the sleeve with the dog clutch of the differential case.

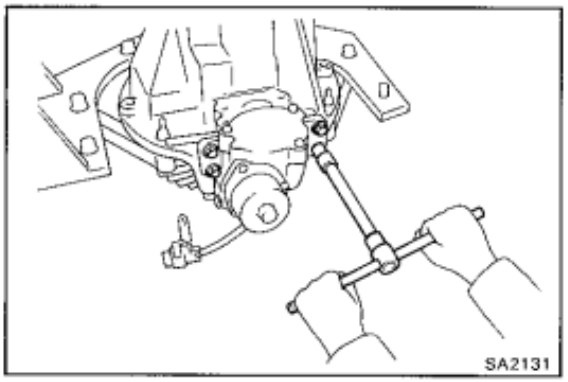
SA2131

(g) Tighten the four bolts.

Torque: 240 kg-cm (17 ft-lb, 24 N·m)

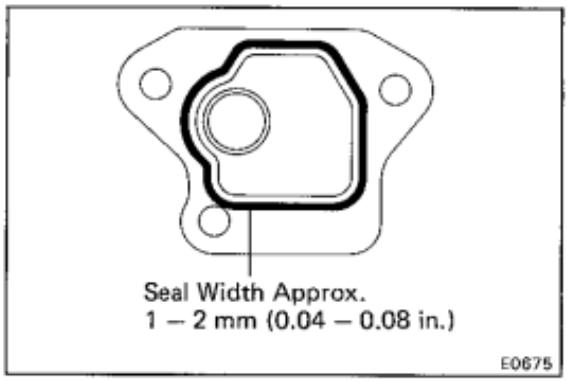

E0675

25. (w/ DIFFERENTIAL LOCK) INSTALL COVER

(a) Clean contacting surfaces of any residual packing material using gasoline or alcohol.

(b) Apply seal packing to the cover.

Seal packing: Part No. 08826-00090, THREE BOND 1281 or equivalent

HINT: Install the cover within ten minutes after applying seal packing.

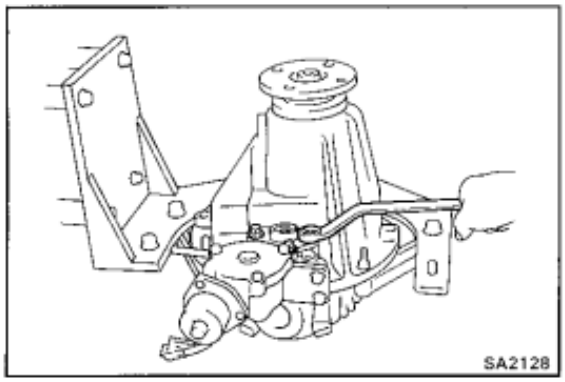

(c) Tighten the three bolts.

Torque: 185 kg-cm (13 ft-lb, 18 N·m)

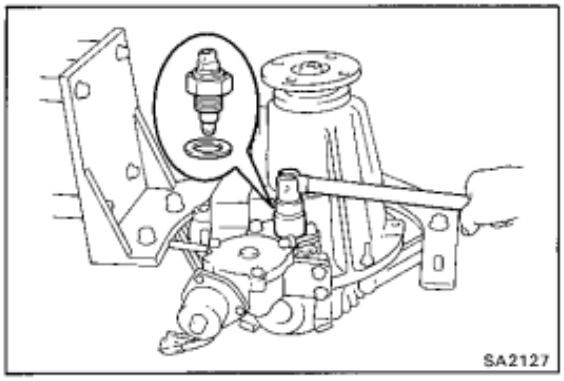

26. (w/ DIFFERENTIAL LOCK)
INSTALL INDICATOR SWITCH

Install the indicator switch with a new gasket.

Torque: 410 kg-cm (30 ft-lb, 40 N·m)

Differential Case (2 Pinion Type)

COMPONENTS

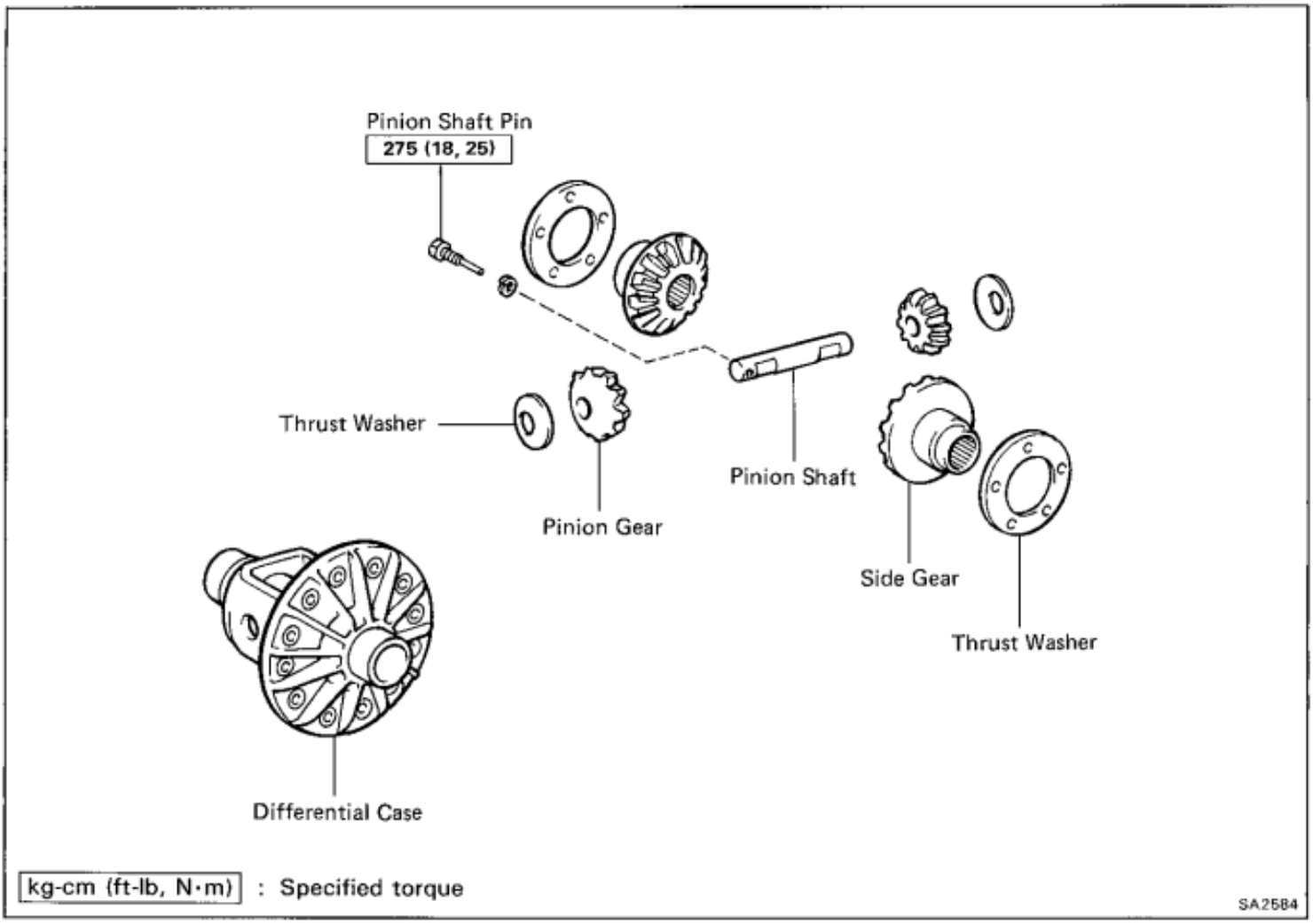

REMOVAL OF DIFFERENTIAL CASE

1. **REMOVE DIFFERENTIAL (See page SA-142)**
2. **REMOVE DIFFERENTIAL CASE FROM CARRIER (See page SA-146)**

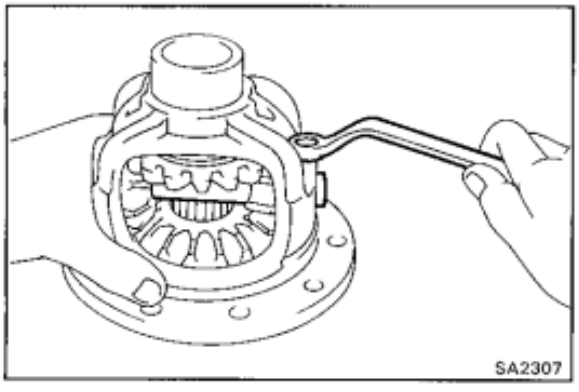

REPLACEMENT OF DIFFERENTIAL CASE COMPONENTS PARTS

1. **DISASSEMBLE DIFFERENTIAL CASE**
   (a) Remove the pinion shaft pin.
   (b) Remove the pinion shaft, two pinion gears, two side gears and four thrust washers.

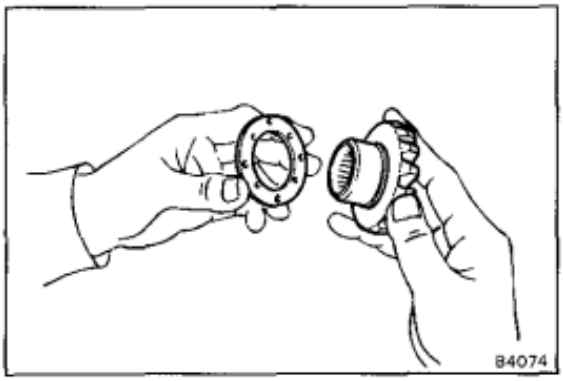

2. ASSEMBLE DIFFERENTIAL CASE

(a) Apply gear oil to each part.

(b) Install the proper thrust washers and side gears.

Using the table below, select thrust washers which will ensure that the backlash is within specification. Try to select washers of the same size for both sides.

Standard backlash: 0.02 — 0.20 mm (0.0008 — 0.0079 in.)

Thrust washer thickness mm (in.)	
1.60 (0.0630)	1.90 (0.0748)
1.75 (0.0689)	2.05 (0.0807)

(c) Install thrust washers, side gears, pinion gears and pinion shaft in the differential case.

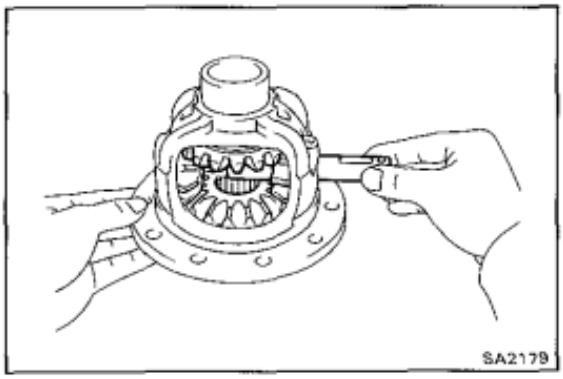

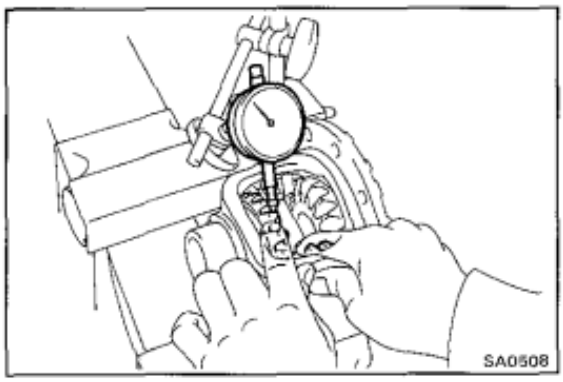

(d) Check the side gear backlash.

Measure the side gear backlash while holding one pinion gear toward the case.

Standard backlash: 0.02 — 0.20 mm (0.008 — 0.0079 in.)

If the backlash is not within specification, install a thrust washer of different thickness.

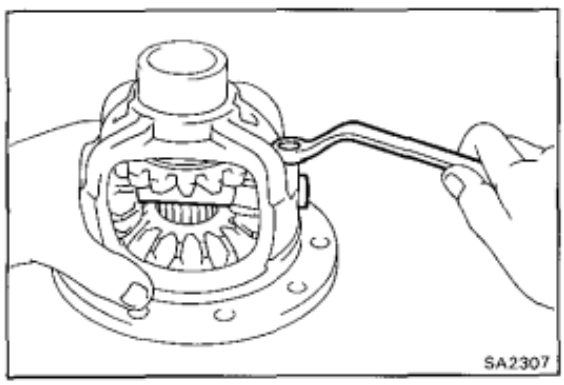

(e) Install the pinion shaft pin.

Torque: 275 kg-cm (18 ft-lb, 25 N·m)

INSTALLATION OF DIFFERENTIAL

1. INSTALL DIFFERENTIAL CASE IN CARRIER (See page SA-146)

2. INSTALL DIFFERENTIAL (See page SA-142)

Differential Case (4 Pinion Type)

COMPONENTS

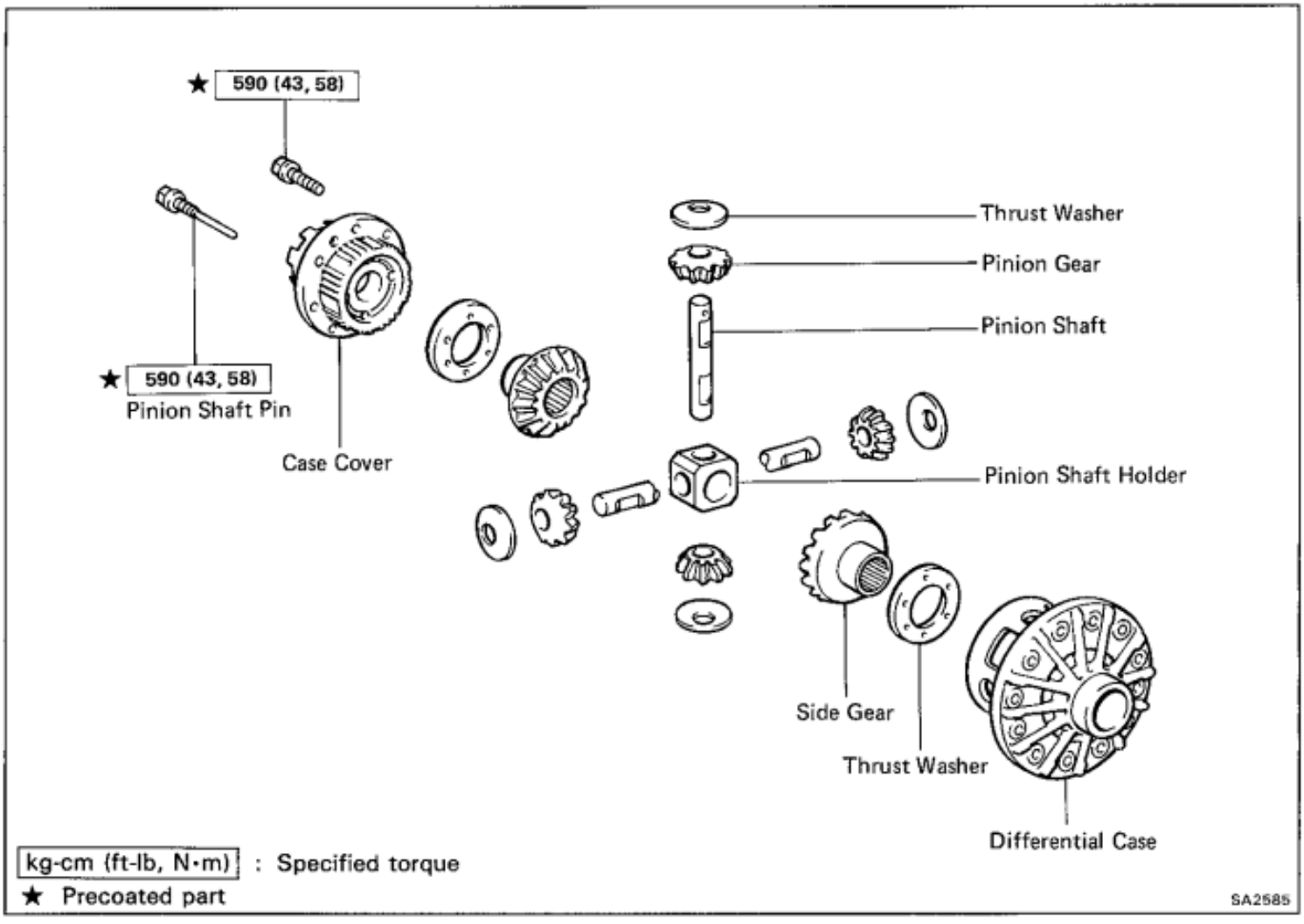

REMOVAL OF DIFFERENTIAL CASE

1. **REMOVE DIFFERENTIAL (See page SA-142)**
2. **REMOVE DIFFERENTIAL CASE FROM CARRIER (See page SA-146)**

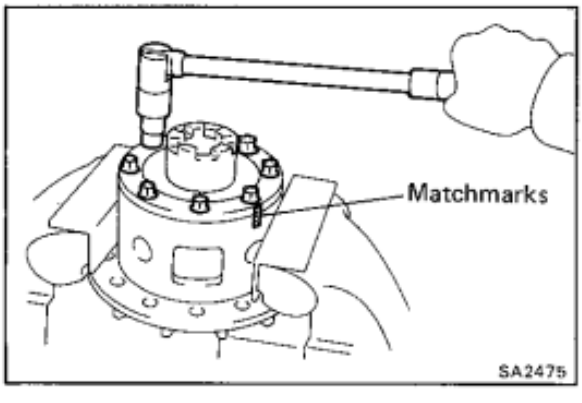

DISASSEMBLY OF DIFFERENTIAL CASE

1. **DISASSEMBLE DIFFERENTIAL CASE**
   (a) Place matchmarks on the case and cover.
   (b) Using a torx socket wrench (09044-00020), remove the five set bolts and three pinion shaft pins.

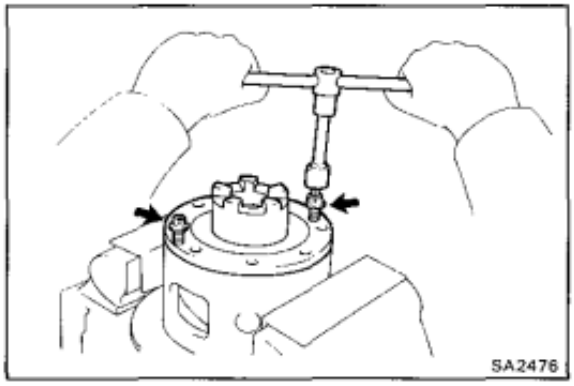

(c) Using two cover installation bolts, separate the cover and case.

(d) Remove the two cover installation bolts.

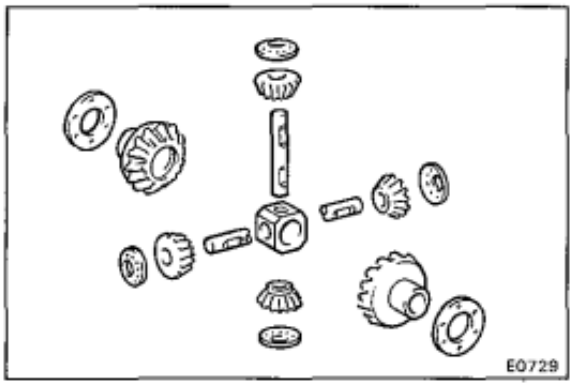

2. REMOVE FOLLOWING PARTS FROM CASE:

- Side gear (2 pieces)
- Side gear thrust washer (2 pieces)
- Pinion gear (4 pieces)
- Pinion thrust washer (4 pieces)
- Pinion shaft (3 pieces)
- Pinion shaft holder

ASSEMBLY OF DIFFERENTIAL CASE

(See page SA-171)

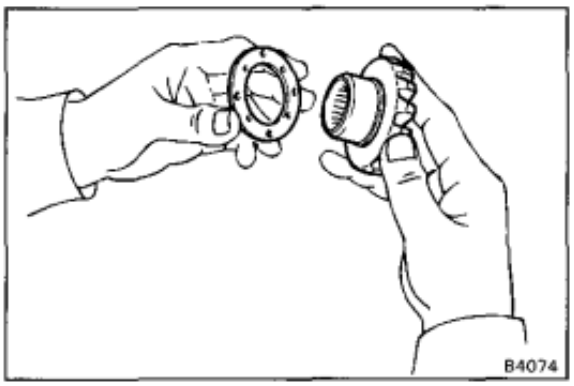

1. MEASURE SIDE GEAR BACKLASH

(a) Apply gear oil to each part.

(b) Install the thrust washer to the side gear.

(c) Install the thrust washer to the pinion.

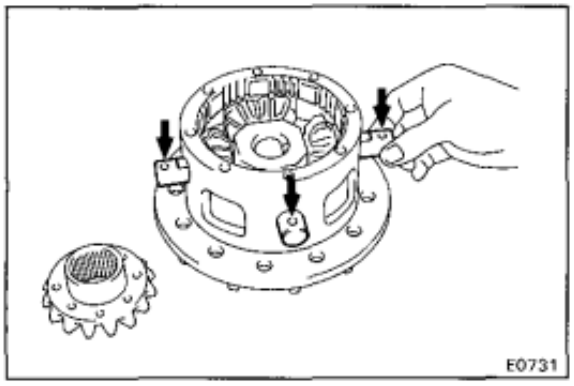

(d) Install the side gear into the case.

(e) Install the holder into the case.

(f) Install the four pinions.

(g) Align the pinion shaft hole and case pinion shaft pin hole, and install the pinion shaft.

(h) Install the side gear to the cover.

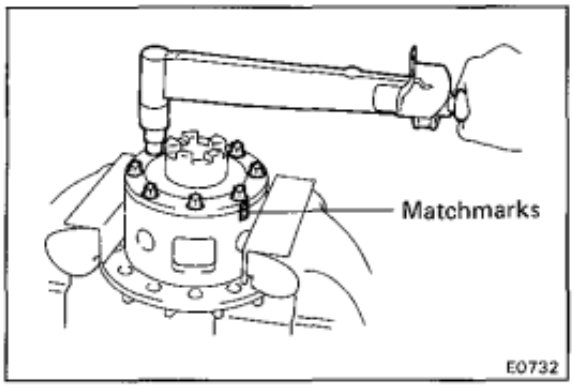

(i) Align matchmarks, install the case and cover.

(j) Using a torx socket wrench (09044-00020), torque the five bolts and three pinion shaft pins.

Torque: 590 kg-cm (43 ft-lb, 58 N·m)

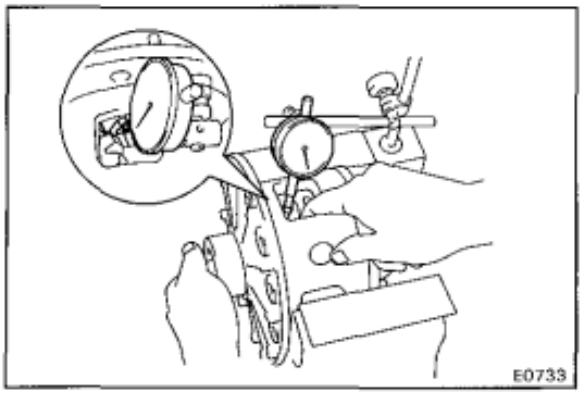

(k) Holding the side gear, measure the backlash.

Backlash: 0.02 — 0.20 mm (0.0008 — 0.0079 in.)

HINT: Measure at all four locations.

If the backlash is not within specification, install the thrust washer of a different thickness.

Thrust washer thickness	mm (in.)
1.60 (0.0630)	1.90 (0.0748)
1.75 (0.0689)	2.05 (0.0807)

(l) After measuring backlash, remove the five set bolts and three pinion shaft pins.

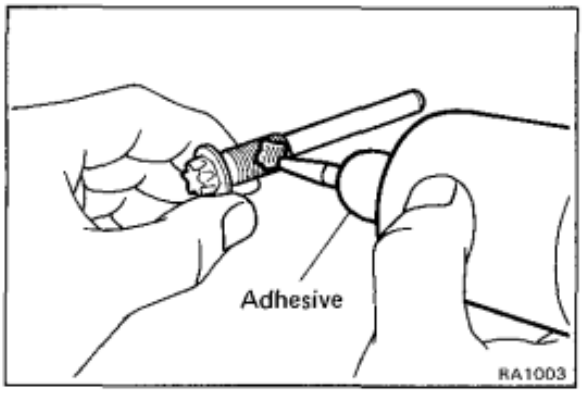

2. ASSEMBLE DIFFERENTIAL CASE

(a) Clean the threads of the bolts, pinion shaft pins, case and cover with the white gasoline.

(b) Coat the threads of the bolts and pinion shaft pins with adhesive.

Adhesive: Part No. 08833-00070, THREE BOND 1324 or equivalent

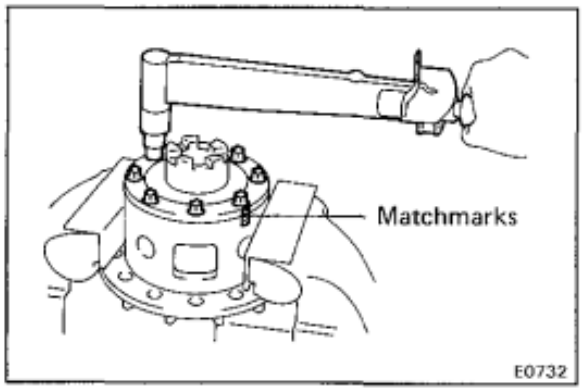

(c) Align matchmarks, install the case and cover.

(d) Using a torx socket wrench (09044-00020), torque the five bolts and three pinion shaft pins.

Torque: 590 kg-cm (43 ft-lb, 58 N·m)

INSTALLATION OF DIFFERENTIAL

1. INSTALL DIFFERENTIAL CASE IN CARRIER
(See page SA-146)

2. INSTALL DIFFERENTIAL
(See page SA-142)

Differential Case (Limited Slip Differential)

COMPONENTS

HINT: * These thrust washers (thicker than the others) are used only by the manufacturer to adjust the pinion gear backlash and are not available as spare parts. For after-sales service, when replacing the thrust washers, replace them with a set of eight of the thinner thrust washers and adjust the pinion gear backlash using separately available adjusting shims.

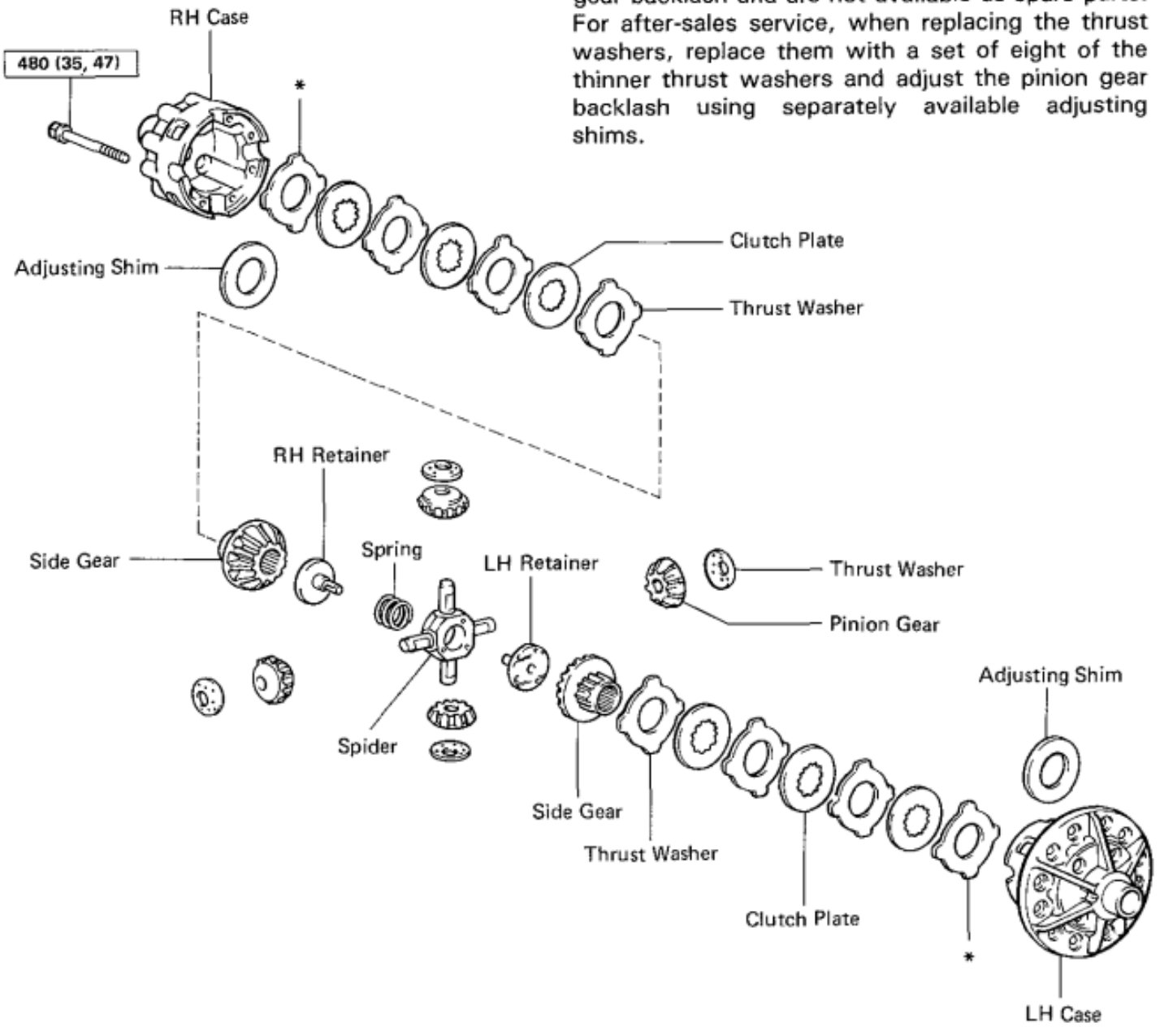

kg-cm (ft-lb, N·m) : Specified torque

SA2588

REMOVAL OF DIFFERENTIAL CASE

1. **REMOVE DIFFERENTIAL (See page SA-142)**
2. **REMOVE DIFFERENTIAL CASE FROM CARRIER (See page SA-146)**

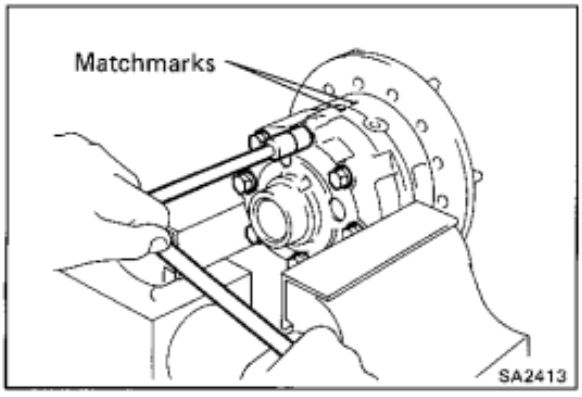

DISASSEMBLY OF DIFFERENTIAL CASE

(See page SA-174)

1. **DISASSEMBLE DIFFERENTIAL CASE**
   (a) Place matchmarks on the LH and RH cases.
   (b) Remove the eight bolts uniformly, a little at a time.
   (c) Using a plastic hammer, separate the LH and RH cases.

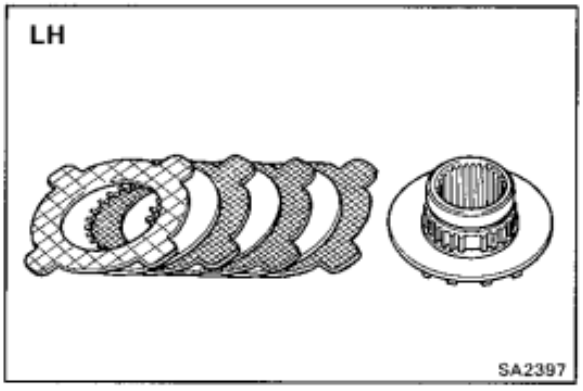

2. **REMOVE FOLLOWING PARTS FROM CASE:**
   HINT: Keep the disassembled parts in order.
   (a) Remove the following parts from the LH case:
      (1) Side gear
      (2) Side gear thrust washer (4 pieces)
      (3) Clutch plate (3 pieces)

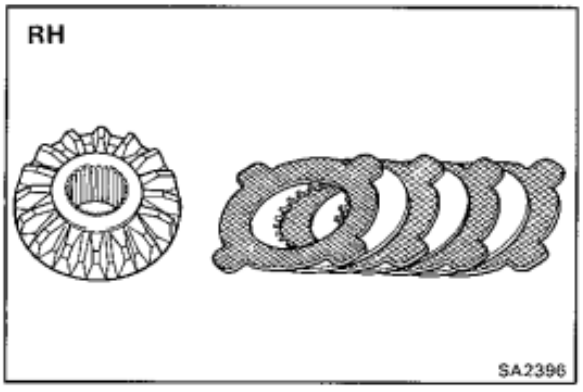

   (b) Remove the following parts from the RH case:
      (1) Spring LH retainer and two springs
      (2) Spider with pinion gear
      (3) Spring RH retainer
      (4) Side gear
      (5) Side gear thrust washer (4 pieces)
      (6) Clutch plate (3 pieces)

INSPECTION OF COMPONENTS

1. **REPLACE PARTS THAT ARE DAMAGED OR WORN**
   HINT: If replacing the side gear, also replace the thrust washer contacting it.

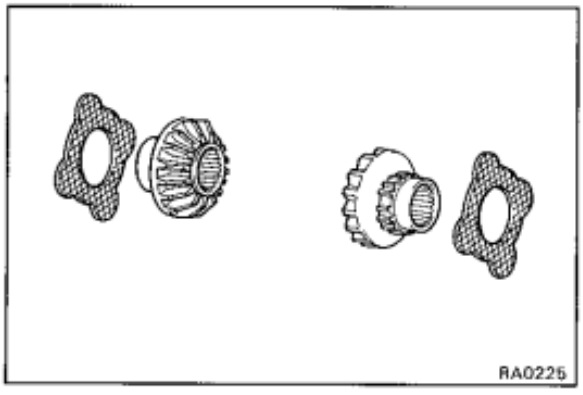

2. **INSPECT THRUST WASHERS FOR WEAR OR DAMAGE**
   Check that the contact surface of the thrust washer is even and that no bare metal is showing.
   (For reference) Thickness:
   1.97 — 2.05 mm (0.0776 — 0.0807 in.)
   If necessary, replace the thrust washers
   HINT: If replacing the thrust washer, also replace the clutch plate contacting it.

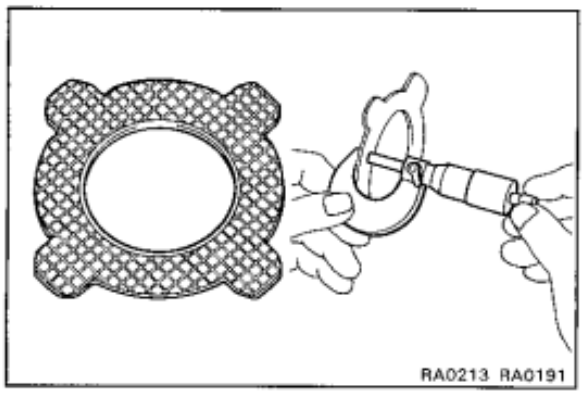

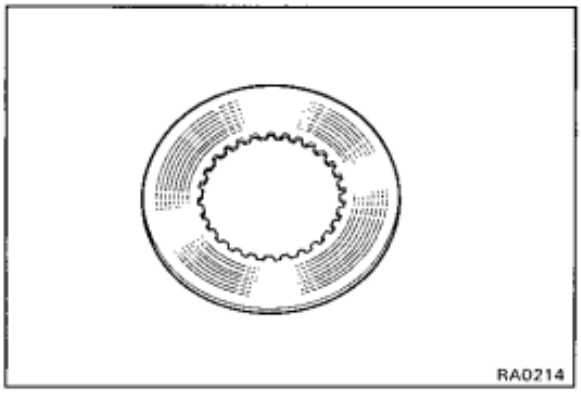

3. INSPECT CLUTCH PLATE FOR WEAR OR DAMAGE

Check that there is no abnormal wear.

(For reference) Thickness:

1.97 — 2.03 mm (0.0776 — 0.0799 in.)

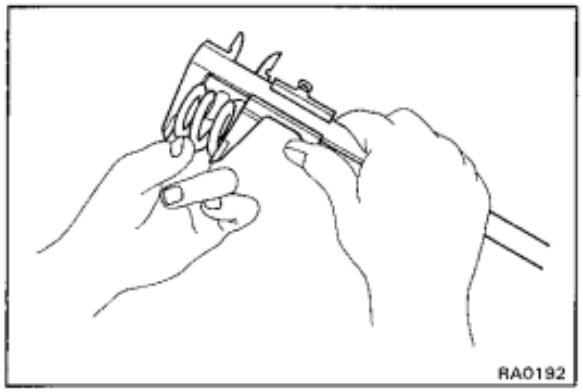

4. INSPECT SPRING FREE LENGTH

Measure the free length of the spring.

(For reference) Lengh:

38.0 — 39.3 mm (1.496 — 1.547 in.)

ASSEMBLY OF DIFFERENTIAL CASE

(See page SA-174)

HINT:

- Using a rag, clean off any foreign matter from the parts.
- Apply LSD oil to the contact surfaces of the clutch plates and the thrust washers.
- When installing, the thrust washers (Marking A — M) are not used. To adjust the backlash, use one new thrust washer or the adjusting shim.

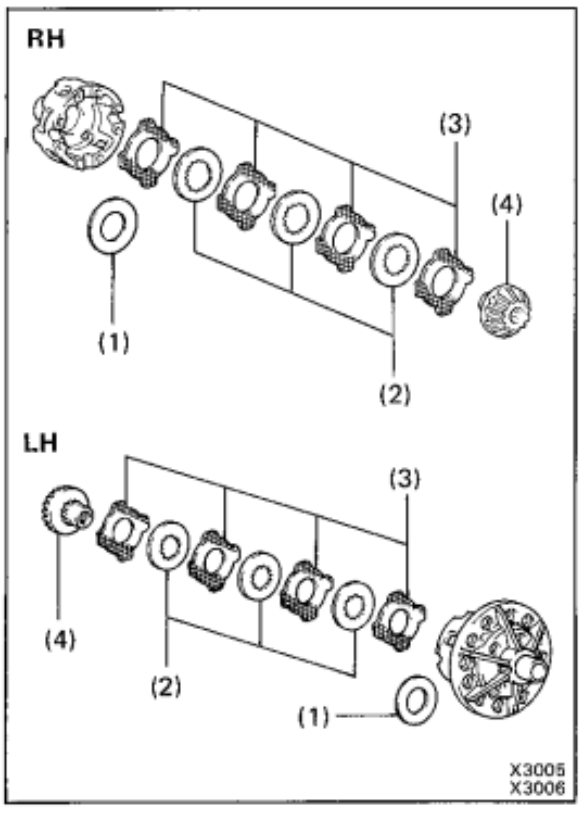

1. MEASURE SIDE GEAR BACKLASH

(a) Install the following parts to the LH and RH cases:

(1) Adjusting shim (0 to 3 pieces)

(2) Clutch plate (3 pieces)

(3) Side gear thrust washer (4 pieces)

(4) Side gear

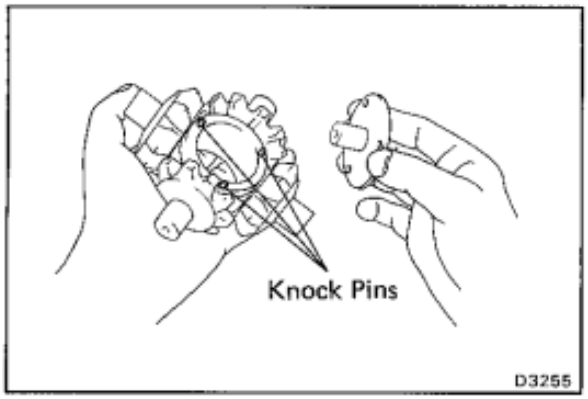

(b) Install the four pinion gears and thrust washers to the spider.

(c) Align the LH retainer holes with the spider knock pins and install the LH retainer.

(d) Install the pinion gear and spider to the LH case.

HINT: Install the spider to the LH case tightely, and don't move the spring retainer.

(e) Hold the side gear and spider, measure the side gear backlash.

Backlash: 0.02 — 0.24 mm (0.0008 — 0.0094 in.)

HINT:

- Measure at all four locations.
- Measure the backlash at the LH case and at the RH case.
  If the backlash is not within specification, install a thrust washer of a different thickness.

Thrust washer thickness	mm (in.)
0.20 (0.0079)	1.30 (0.0118)
0.25 (0.0098)	0.35 (0.0138)

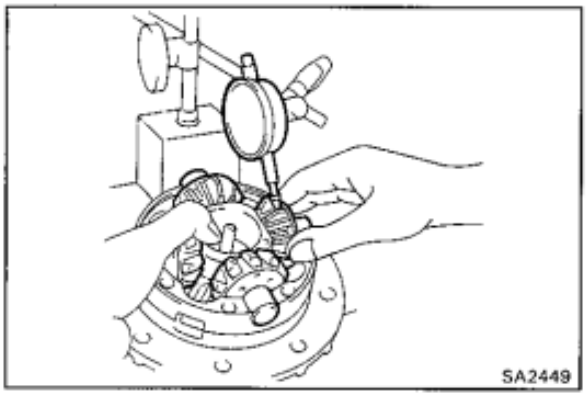

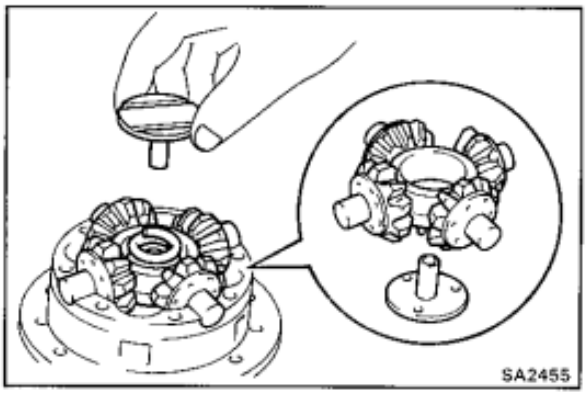

2. ASSEMBLE DIFFERENTIAL CASE

(a) Reinstall the spider and spring LH retainer to the LH case.

HINT: Install the spider to the LH case tightly, and don't move the spring.

(b) Install the compression spring and spring RH retainer.

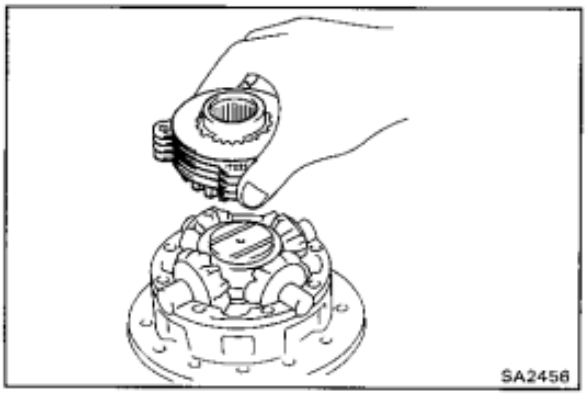

(c) Install the side gear, thrust washers and clutch plates.

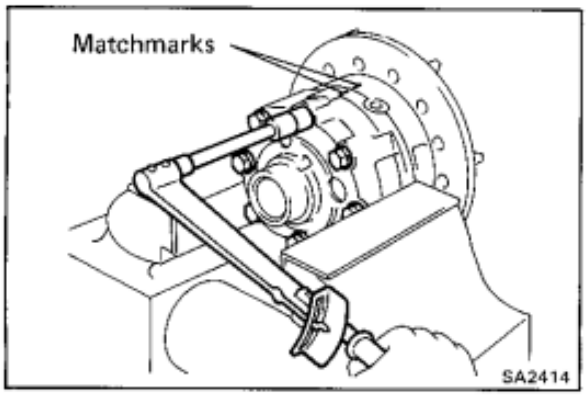

(d) Align matchmarks and assemble the RH and LH cases.

HINT: Be careful not to drop the side gear, and check the pinion and side gear alignment.

(e) Tighten the eight bolts uniformly, a little at a time.

Torque: 480 kg-cm (35 ft-lb, 47 N·m)

INSTALLATION OF DIFFERENTIAL

1. INSTALL DIFFERENTIAL CASE CARRIER
(See page SA-146)

2. INSTALL DIFFERENTIAL
(See page SA-142)

DIFFERENTIAL LOCKING SYSTEM

Description

- The differential locking system slides the differential lock sleeve which is meshed to the axle shaft, and by meshing with the differential case, restricts the operation of the differential.
- In the vehicles, an electric motor is used to slide the differential lock sleeve. Driving of the motor is accomplished by the ECU (Electronic Control Unit) in accordance with signals from the differential lock control switch on the instrument panel and from various other switches and sensors. This motor is built into the differential lock actuator.
  For RJ and LJ series, the locking system is adopted only into the rear differential.

Parts Location and System Diagram

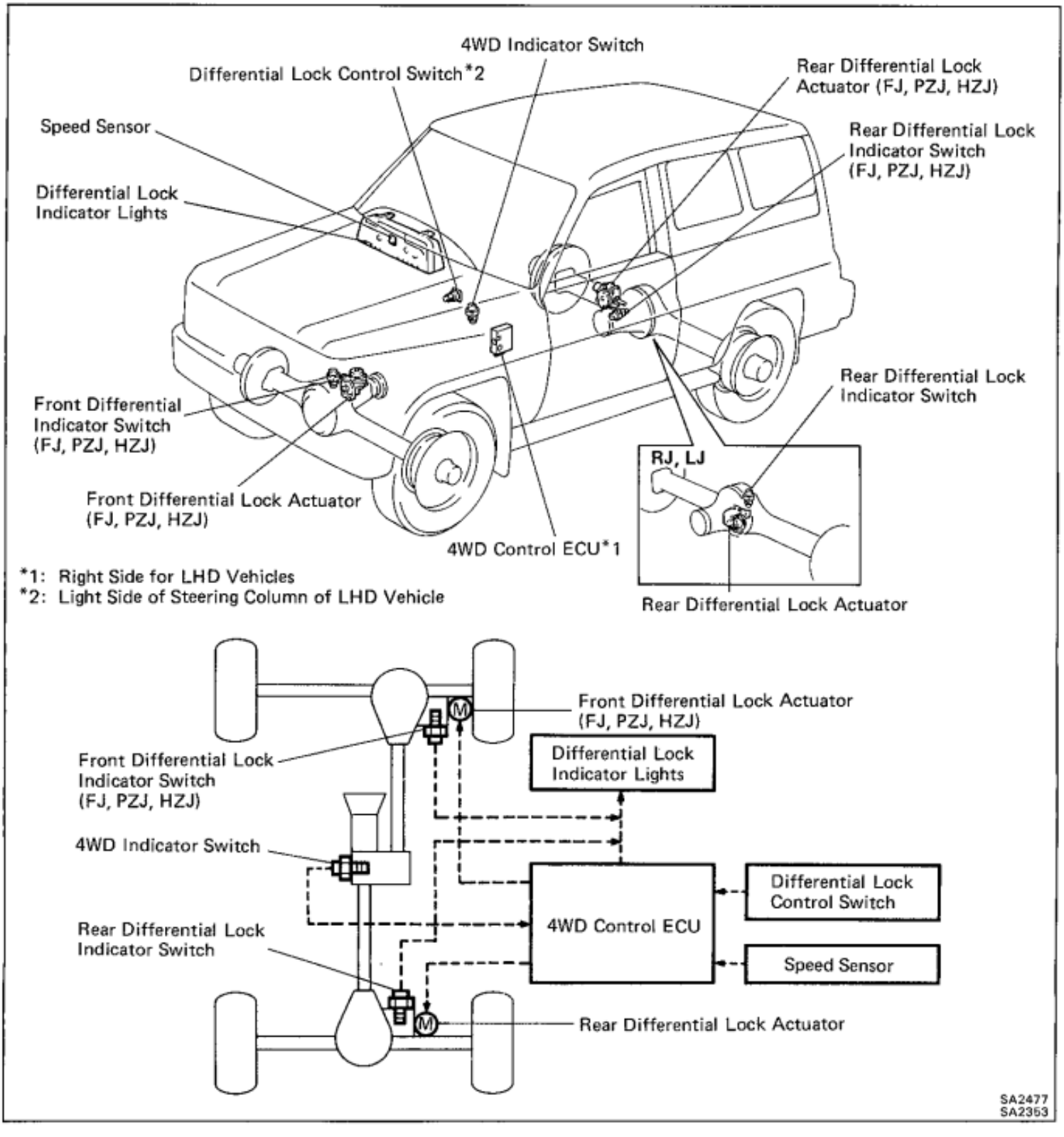

Wiring and Connector Diagrams

RJ, LJ

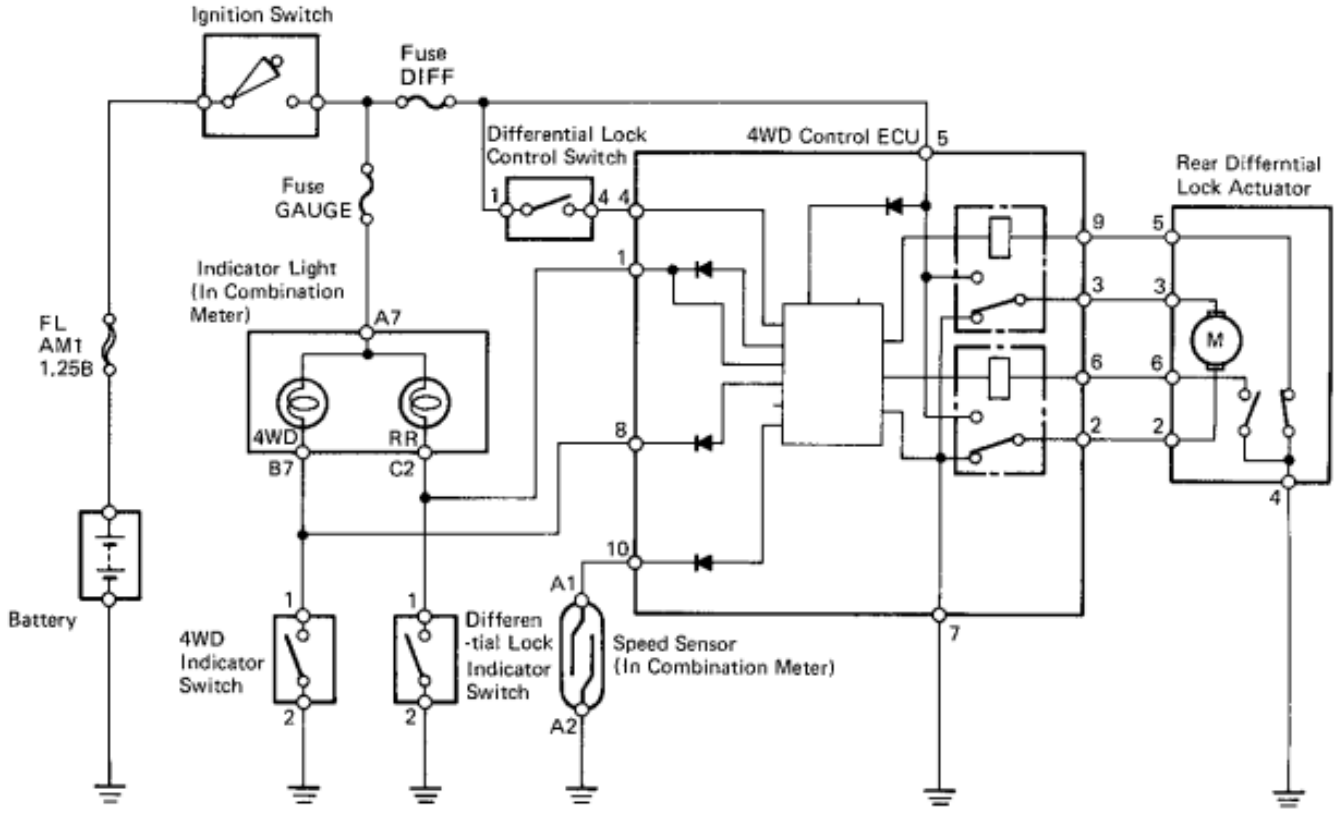

FJ, PZJ, HZJ

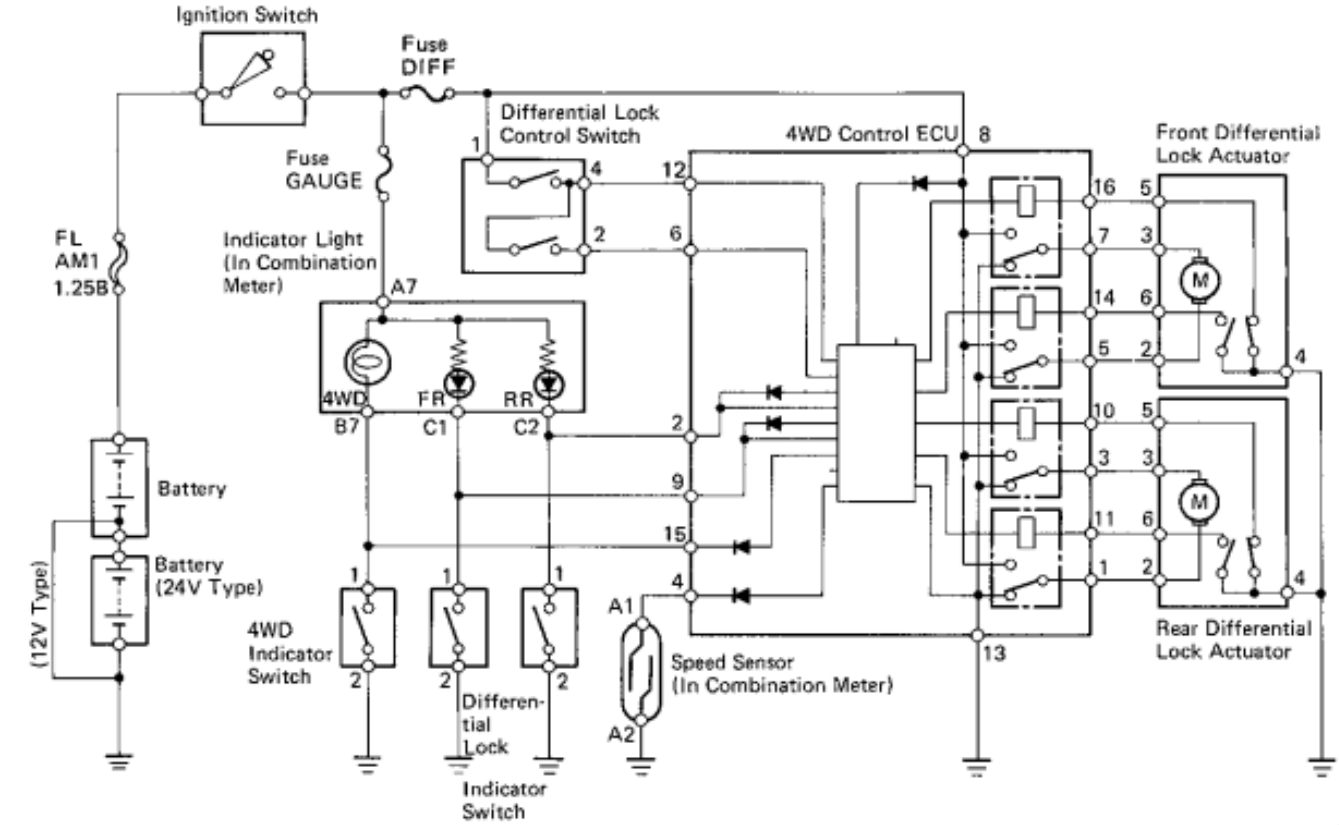

SA2222
SA2223

Wiring and Connector Diagrams (Cont'd)

Differential Lock Control Switch

(RJ, LJ)

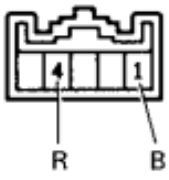

(FJ, PZJ, HZJ)

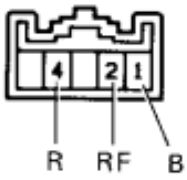

Front Differential Lock Actuator

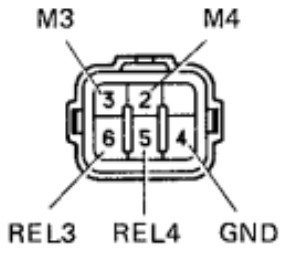

Rear Differential Lock Actuator

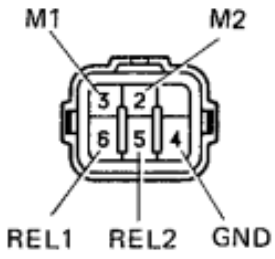

4WD Indicator Switch
Differential Lock Indicator Switch

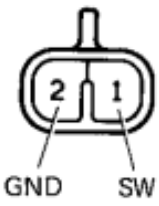

4WD Control ECU

(RJ, LJ)

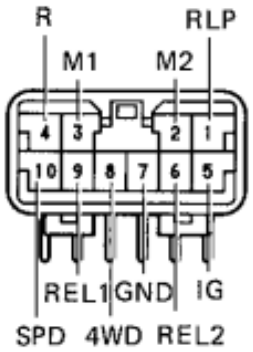

(FJ, PZJ, HZJ)

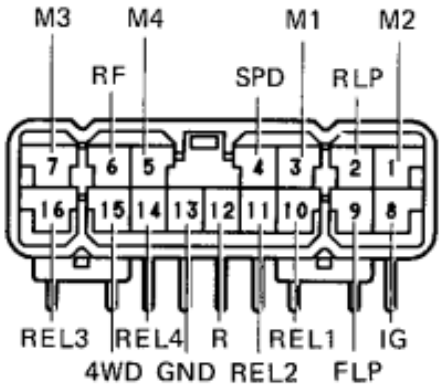

Combination Meter

(w/o Tachometer)

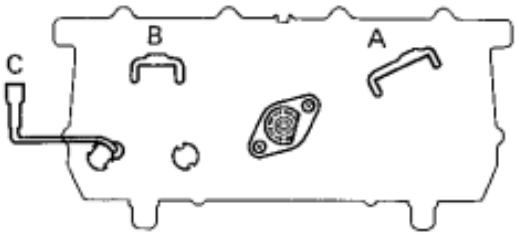

(w/ Tachometer)

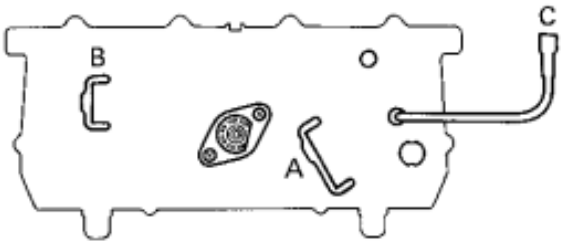

Connector "A"

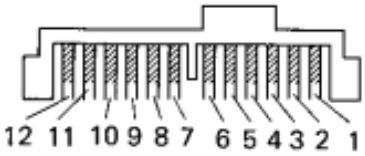

Connector "B"

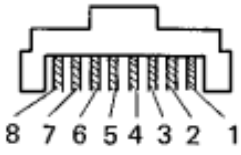

Connector "C"

Troubleshooting

NOTICE:

- **Make sure that 4WD mode is set.**
- **When switching differential Free ↔ Lock, the indicator lamp will blink if the gears of the differential lock sleeve are not meshed. If this occurs, when the tires are rotated to apply differential power to the differential, the differential locks and the indicator lamp light up.**

Problem	Possible cause	Remedy	Page
Indicator lights do not light up.	Fusible link blown	Replace fusible link	
	GAUGE fuse blown	Replace fuse and check for short	
	Bulb burned out	Replace bulb	
	Wiring or ground faulty	Repair as necessary	
Indicator lights do not light up (Differential lock control switch RR or FR-RR position).	DIFF fuse blown	Replace fuse and check for short	
	Differential lock switch control switch	Check switch	SA-191
	4WD control ECU faulty	Check ECU	SA-182, 184
	Wiring or ground faulty	Repair as necessary	
DIFF LOCK does not operate.	Differential lock indicator switch faulty	Check switch	SA-191
	Differential lock actuator faulty	Check actuator	SA-184
	4WD control ECU faulty	Check ECU	SA-182, 184
	Differential carrier faulty	Repair as necessary	
	Wiring or ground faulty	Repair as necessary	
After DIFF LOCK, lock not released when vehicle speed higher than approx. 8 km/h (5 mph).	Speed sensor faulty	Check sensor	BE-57
	4WD control ECU faulty	Check ECU	SA-182, 184
	Wiring or ground faulty	Repair as necessary	

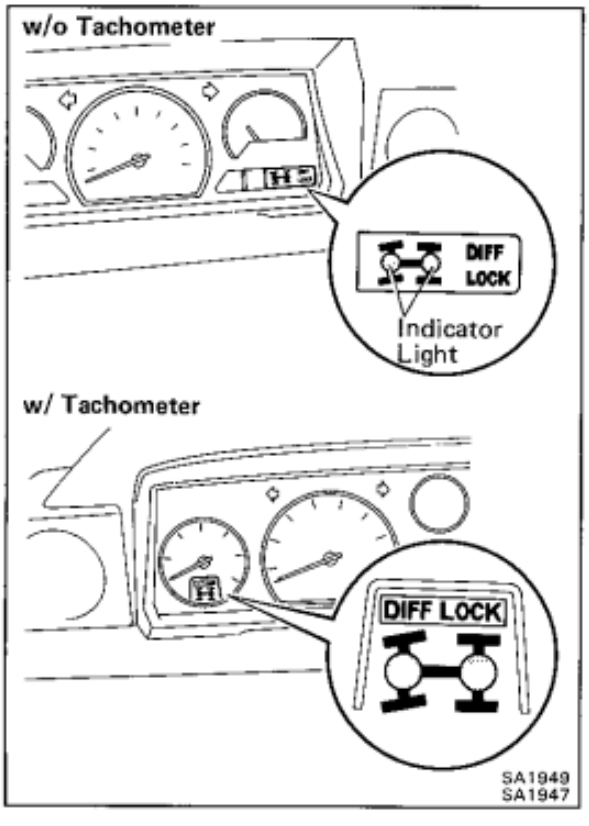

System Inspection

1. **INSPECT INDICATOR LIGHTS**

   Check that the indicator lights (front side and rear side) light up for approx. one second when the ignition switch is turned ON.

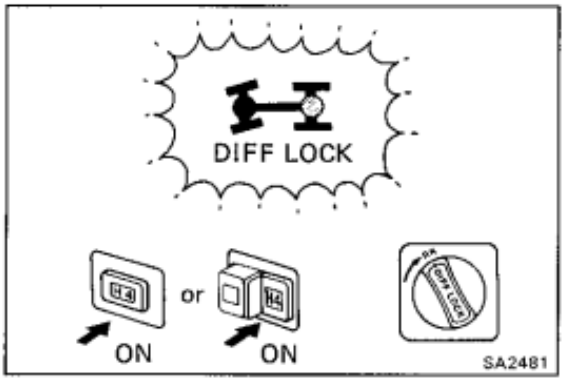

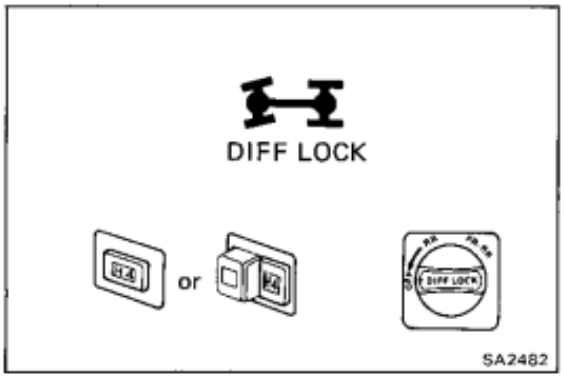

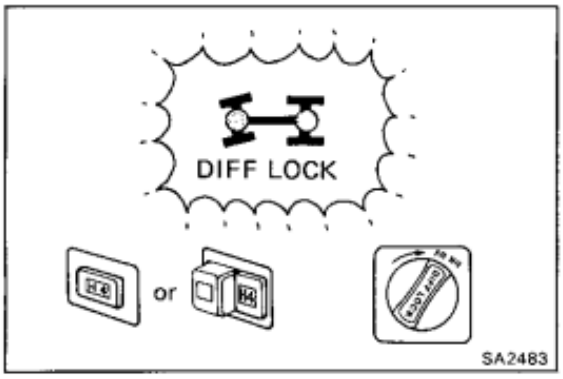

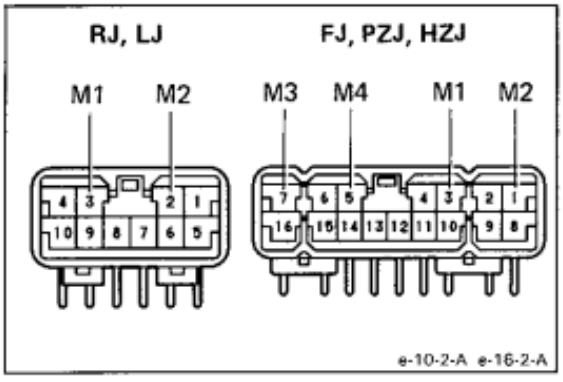

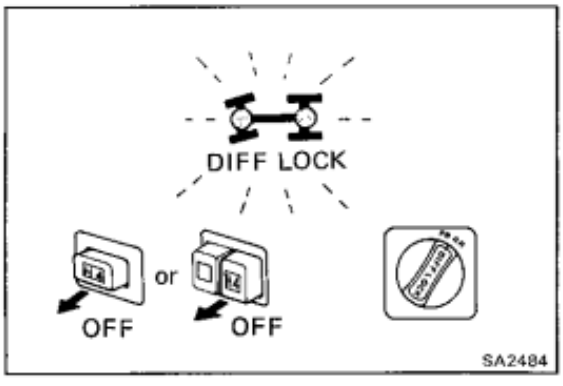

2. INSPECT DIFFERENTIAL LOCK OPERATION

HINT: Put the shift lever on neutral.

(a) Jack up the vehicle and then start the engine.

(b) Put on the 4WD switch.

(c) When the differential lock control switch is set to RR position, the indicator light (rear side) is turned on. Differential lock is applied to the rear wheel at this time.

HINT: If the gears of the differential lock system are not meshed, the indicator light remains blinking, so rotate the tires to mesh the gears.

(d) When the differential lock control switch is at OFF position, the indicator light goes off.Differential lock is released for the rear wheel at this time.

(e) When the differential lock control switch is set to FR·RR position, the indicator lights (front side and rear side) are turned on. Differential lock is applied to both the front wheels and rear wheels at this time.

(f) Check the voltage between the terminals of the 4WD control ECU when switching the lock control switch with the speedometer registering approx. 8 km/h (5 mph) or more.

Diff. lock control switch	Terminal	Specified value
OFF → RR	M1 — M2	0.5 V or less (no change)
RR → FR·RR	M3 — M4	0.5 V or less (no change)

(g) Check that the indicator lights blink when 2WD mode is set. Differential lock is released for both the front wheels and rear wheels at this time.

(h) Return the differential lock control switch to OFF.

(i) Stop the engine and jack down the vehicle.

RJ, LJ

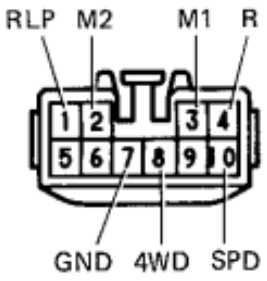

FJ, PZJ, HZJ

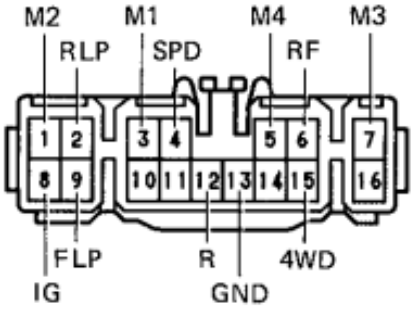

e-10-1
e-16-2-A

Differential Locking System Circuit

INSPECTION OF SYSTEM CIRCUIT

1. **INSPECT SYSTEM CIRCUIT WITH CONNECTOR DISCONNECTED**

Disconnect the connector from the 4WD control ECU and inspect the connector on the wire harness side as shown in the chart.

HINT: (FJ, PZJ, HZJ) When a signal enters the ECU to LOCK the front differential and set the rear differential to FREE (when battery voltage is inputted to terminal RF of ECU and about 0 V is inputted to terminal R), or a signal to FREE both the front and rear differentials, the indicator lights keep blinking until the ignition switch is turned off. (Fail-safe function)

Trouble Part	Tester Connection	Check item	Condition		Specified Value
Rear Differential Lock Actuator	M1 — M2	Resistance	—		Less than 100 Ω
Front Differential Lock Actuator	M3 — M4	Resistance	—		Less than 100 Ω
Body Ground	GND — Body ground	Continuity	—		Continuity
Speed Sensor	SPD — Body ground	Continuity	Vehicle moving slowly		1 pulse each 40 cm (15.75 in.)
DIFF Fuse	IG — Body ground	Voltage	Ignition Switch ON	—	Battery voltage
Rear Differential Lock Indicator Switch	RLP — Body ground	Voltage	Ignition Switch ON	Indicator light (Rear) ON	About 0 V
				Indicator light (Rear) OFF	Battery voltage
Front Differential Lock Indicator Switch	FLP — Body ground	Voltage	Ignition Switch ON	Indicator light (Front) ON	About 0 V
				Indicator light (Front) OFF	Battery voltage
4WD Indicator Switch	4WD — Body ground	Voltage	Ignition Switch ON	Indicator light (4WD) ON	About 0 V
				Indicator light (4WD) OFF	Battery voltage
Differential Lock Control Switch	R — Body ground	Voltage	Ignition Switch ON	Differential lock control switch RR or FR·RR	Battery voltage
				Differential lock control switch OFF	About 0 V
	RF — Body ground	Voltage	Ignition Switch ON	Differential lock control switch FR·RR	Battery voltage
				Differential lock control switch OFF or RR	About 0 V

If the circuit is not as specified, check and repair or replace the trouble part shown in the table above.

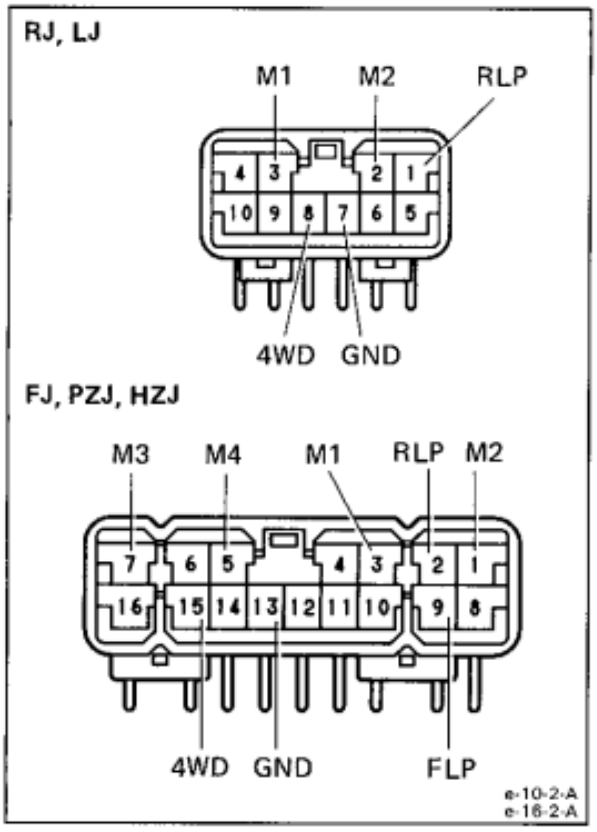

2. INSPECT BATTERY OF VOLTAGE

Battery voltage: 12 V Type 10 — 14.5 V
24 V Type 20 — 29 V

3. INSPECT SYSTEM CIRCUIT WITH CONNECTOR CONNECTED

(a) Turn the ignition switch to ON position.

(b) Put on the 4WD switch.

(c) Remove the 4WD control ECU.

(d) Using voltmeter, measure the voltage when the differential lock control switch is in the positions as shown below.

Tester Connection ⊕ — ⊖	Switch position	Specified valve
4WD — GND	—	0.5 V or less
FLP — GND	FR·RR	
RLP — GND	RR or FR·RR	
M1 — M2	OFF → RR	0.5 V or less ↓ Battery voltage (Approx. 1 sec.) ↓ 0.5 V or less
M2 — M1	RR → OFF	
M3 —M4	OFF or RR → FR·RR	
M4 —M3	FR·RR → RR or OFF	

If the circuit is not as specified, replace the ECU.

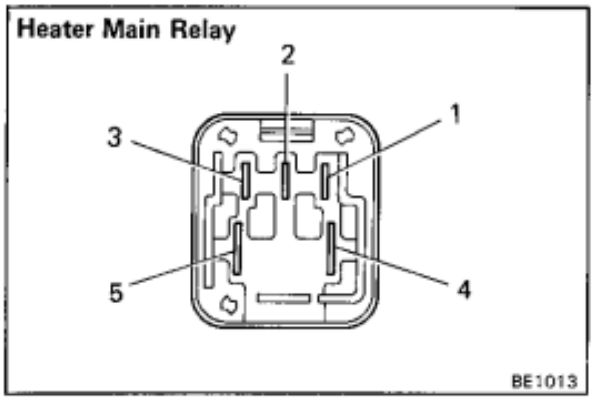

Differential Lock Actuator

INSPECTION OF ACTUATOR

INSPECT RELAY OPERATION

(a) Jack up the vehicle.

(b) Use the heater main relay and connect it as shown below.

(c) Rotate the tire and check that differential lock has occurred.

If operation is not as specified, replace the actuator.

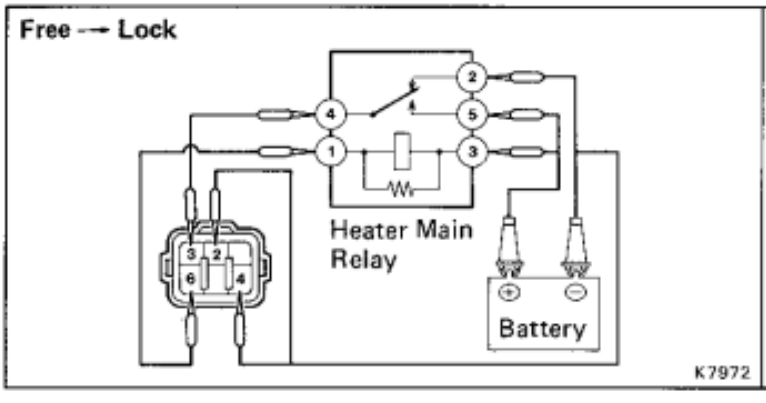

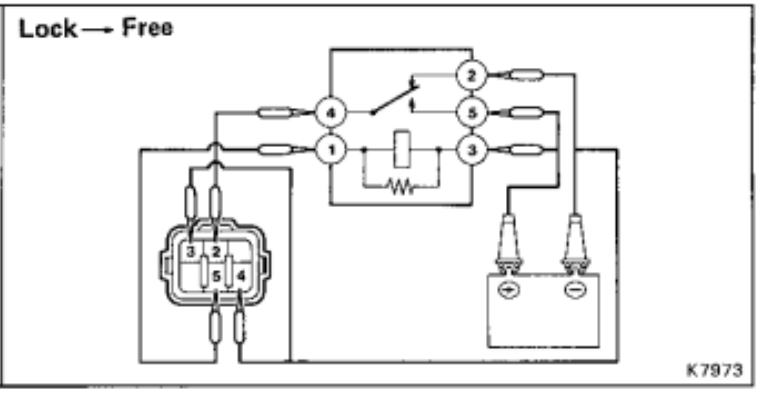

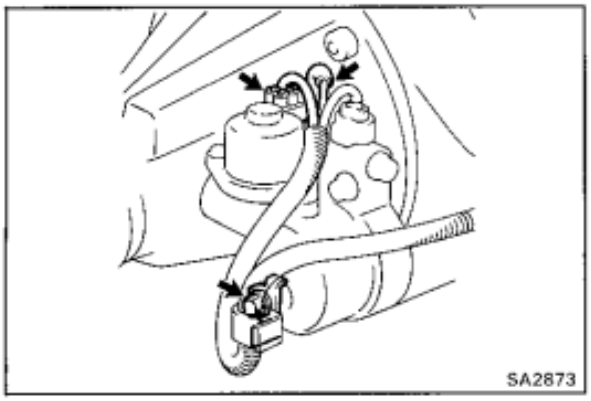

REMOVAL AND INSTALLATION OF FRONT ACTUATOR

1. **SHIFTING FRONT DIFFENTIAL LOCK**
(See step 1 on page SA-55)

2. **REMOVE ACTUATOR**

(a) Disconnect the connector, tube and wire clamp bolts.

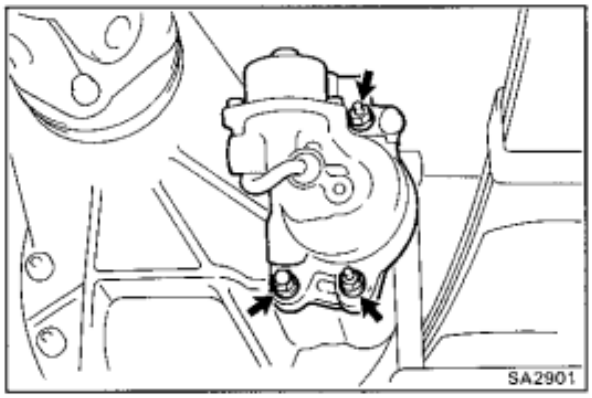

(b) Remove the two nuts, bolt and actuator.

(c) Remove the O-ring from the actuator.

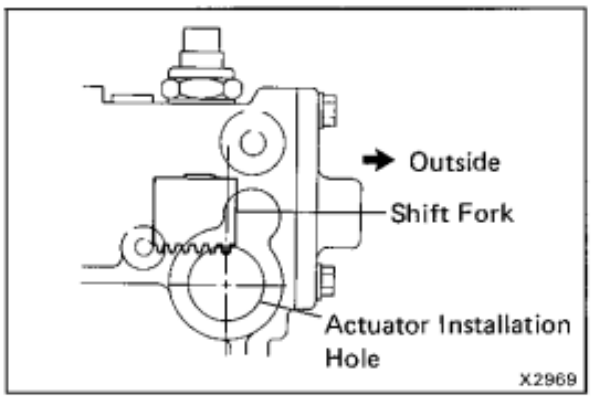

3. **INSTALL ACTUATOR**

(a) Check that the outermost rack tooth of the shift fork is virtually above the center line of the actuator installation hole.

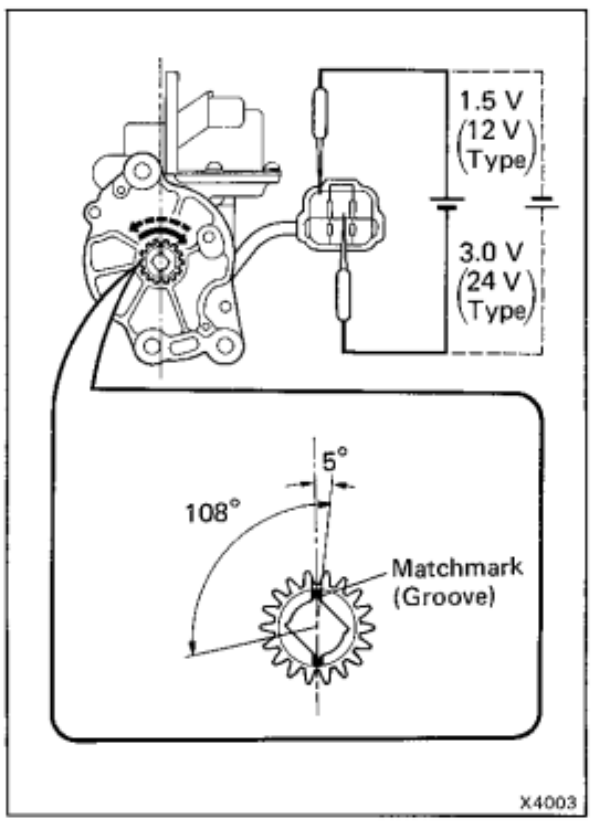

(b) Using dry cell battery (12 V type is 1.5 V, 24 V type is 3.0 V), align the matchmark on the actuator pinion with the center line of the actuator.

NOTICE:

- **If the pinion of the actuator is not in the specified place, the actuator is difficult to be installed.**
- **Don't supply the battery voltage between terminals.**
- **If the matchmark comes to the extention limit of the rotation, don't electrify moreover.**

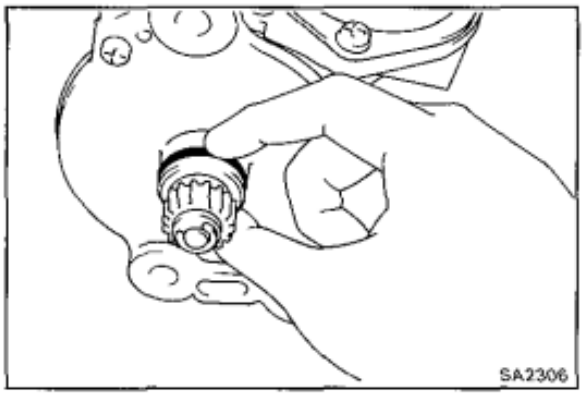

(c) Install a new O-ring to the actuator.

(d) Apply a light coat of gear oil on the O-ring.

(e) Apply MP grease to the gear part of the actuator.

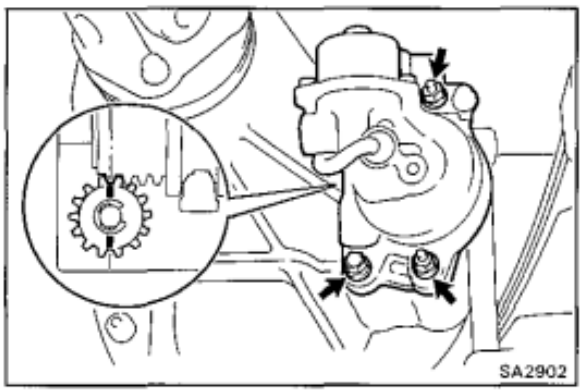

(f) Install the actuator to the differential with two nuts and bolt, so that the outermost rack tooth of the shift fork shall fit matchmark of the pinion of the actuator.

HINT: Do not damage the O-ring of the actuator.

Torque: 270 kg-cm (20 ft-lb, 26 N·m)

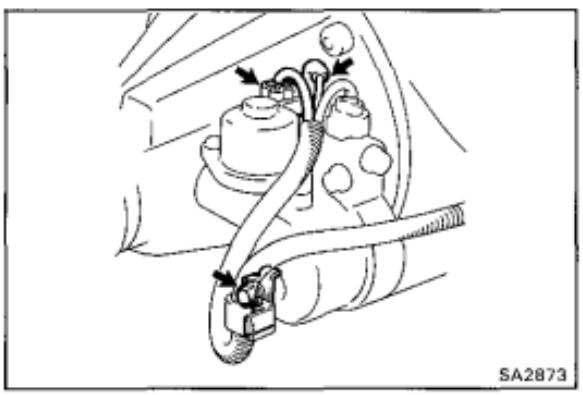

(g) Connect the wire clamp bolt, connector and tube.

HINT:

- The depth of the insertion of the bleeder tube into the hose is approx. 15 mm (0.59 in.).
- Take care that water or the equivalent shall not adhere to the connector and hose.

4. CANCEL FRONT DIFFERENTIAL LOCK

With the ignition switch ON, turn the differential lock control switch to OFF to cancel the differential lock.

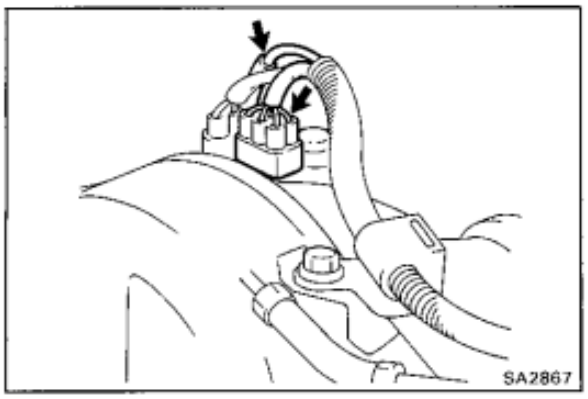

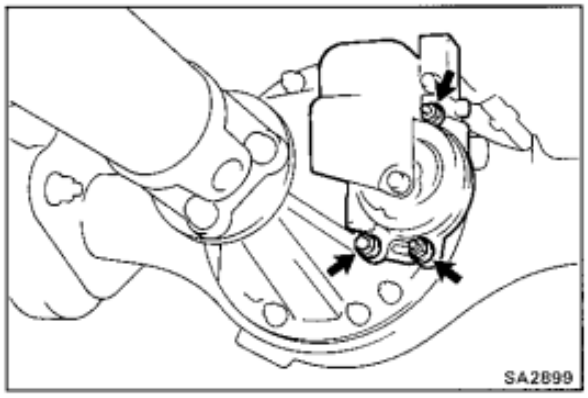

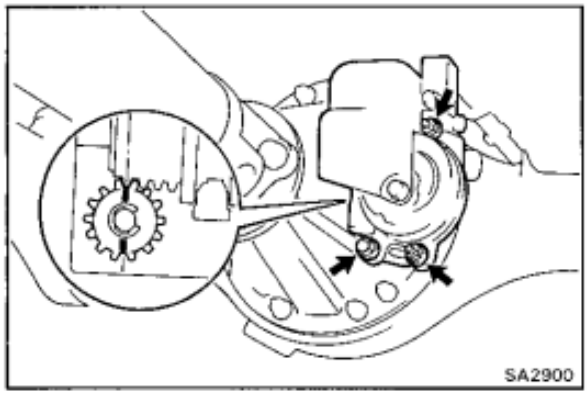

REMOVAL AND INSTALLATION OF REAR ACTUATOR (RJ, LJ)

1. **SHIFTING REAR DIFFENTIAL LOCK**
   (See step 1 on page SA-127)

2. **REMOVE ACTUATOR**
   (a) Disconnect the connector and tube.
   (b) Remove the two nuts, bolt and actuator.
   (c) Remove the O-ring from the housing.

3. **INSTALL ACTUATOR**
   (See step 3 on page SA-185)
   Torque: 270 kg-cm (20 ft-lb, 26 N·m)

4. **CANCEL REAR DIFFERENTIAL LOCK**
   With the ignition switch ON, turn the differential lock control switch to cancel the differential lock.

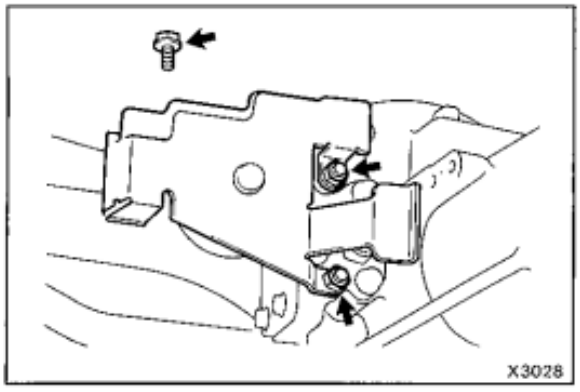

REMOVAL AND INSTALLATION OF REAR ACTUATOR (FJ, PZJ, HZJ)

1. **SHIFTING REAR DIFFERENTIAL LOCK**
   (See step 1 on page SA-127)

2. **REMOVE ACTUATOR PROTECTOR**
   Remove the two nuts, bolt and protector.

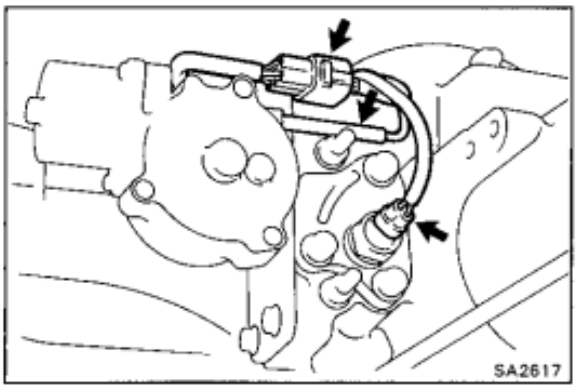

3. **DISCONNECT CONNECTORS AND TUBE**

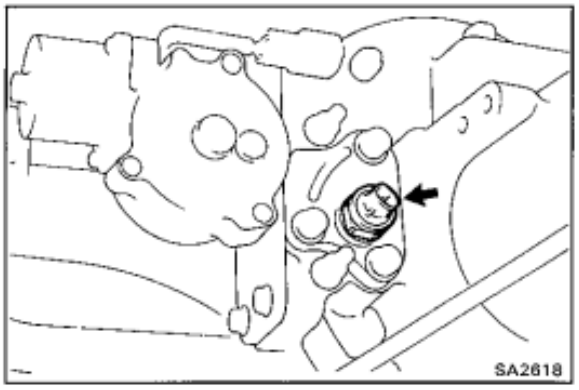

4. **REMOVE INDICATOR SWITCH**

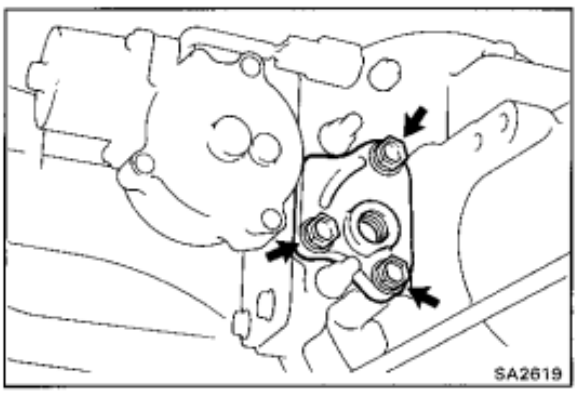

5. **REMOVE COVER**
   (a) Remove the three bolts.
   (b) Using a brass bar and hammer, remove the cover.

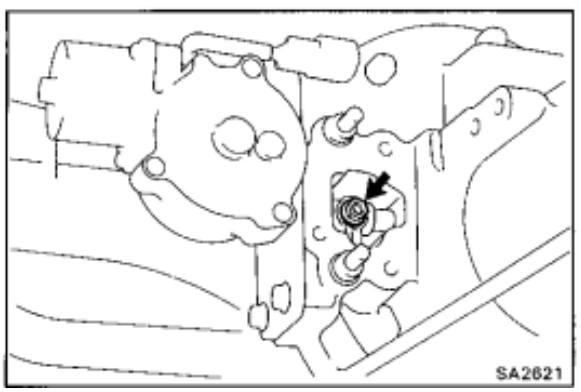

6. **REMOVE ACTUATOR**
   (a) Remove the shift fork shaft bolt.

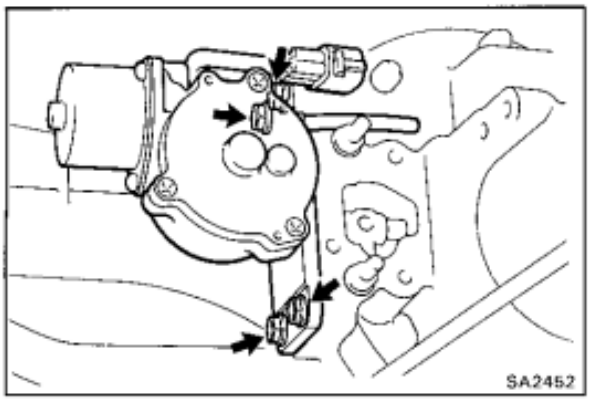

(b) Remove the four bolts.

(c) Using a screwdriver, pry out the actuator.

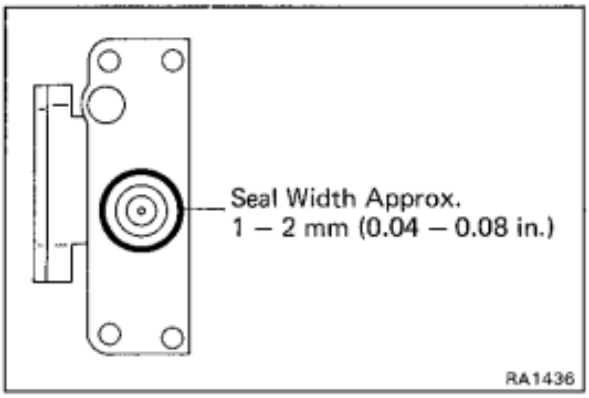

7. INSTALL ACTUATOR

(a) Clean contacting surfaces of any residual packing material using gasoline or alcohol.

(b) Apply seal packing to the actuator.

Seal packing: Part No. 08826-00090, THREE BOND 1281 or equivalent

HINT: Install the actuator within ten minutes after applying seal packing.

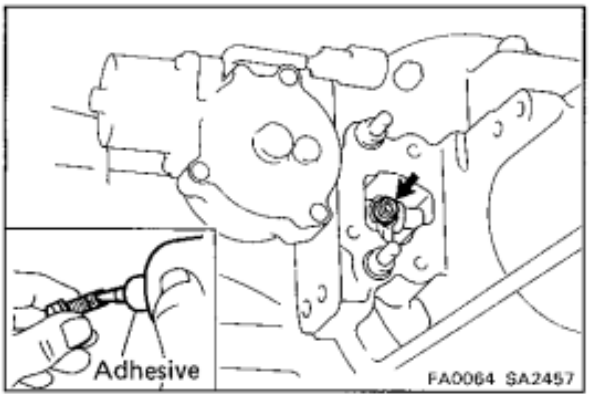

(c) Install the actuator to the differential and match the shaft with the shaft fork hole.

(d) Clean the threads of the set bolt and fork shaft with the white gasoline.

(e) Coat the threads of the set bolt with adhesive.

Sealer: Part No. 08833-00070, THREE BOND 1324 or equivalent

(f) Tighten the shift fork set bolt.

Torque: 200 kg-cm (14 ft-lb, 20 N·m)

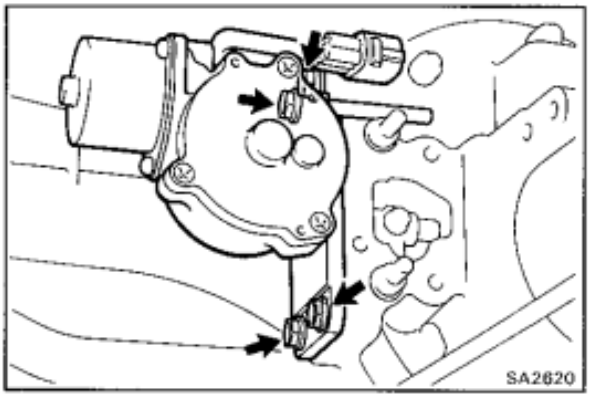

(g) Tighten the four bolts uniformly, a little at a time.

Torque: 240 kg-cm (17 ft-lb, 24 N·m)

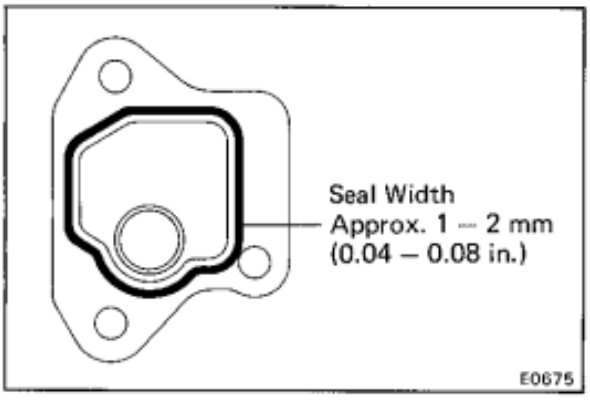

8. INSTALL COVER

(a) Clean contacting surfaces of any residual packing material using gasoline or alcohol.

(b) Apply seal packing to the cover.

Seal packing: Part No. 08826-00090, THREE BOND 1281 or equivalent

HINT: Install the cover ten minutes after applying seal packing.

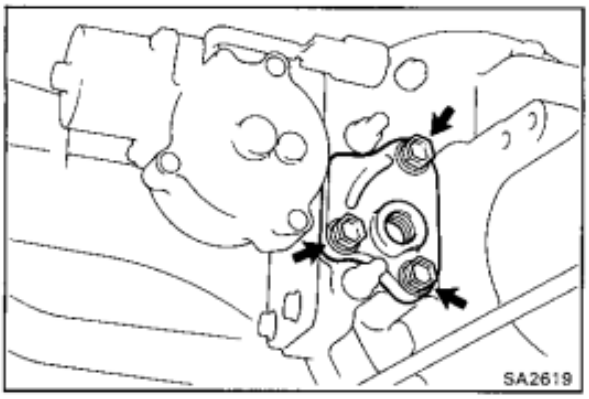

(c) Tighten the three bolts.

Torque: 185 kg-cm (13 ft-lb, 18 N·m)

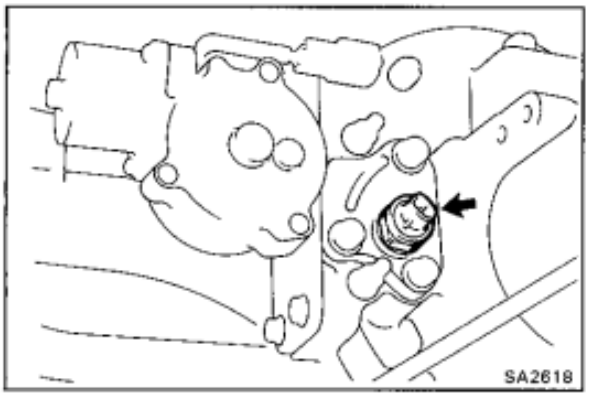

9. INSTALL INDICATOR SWITCH

Install the indicator switch with a new gasket.

Torque: 410 kg-cm (30 ft-lb, 40 N·m)

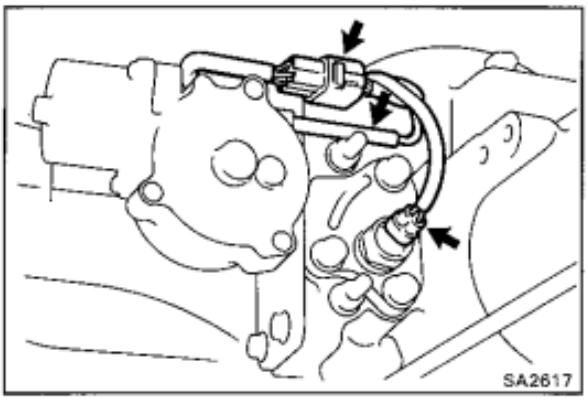

10. CONNECT CONNECTORS AND TUBE

HINT:

- The depth of the insertion of the bleeder tube into the hose is approx. 15 mm (0.59 in.).
- Take care the water or equivalent shall not adhere to the connectors and hose.

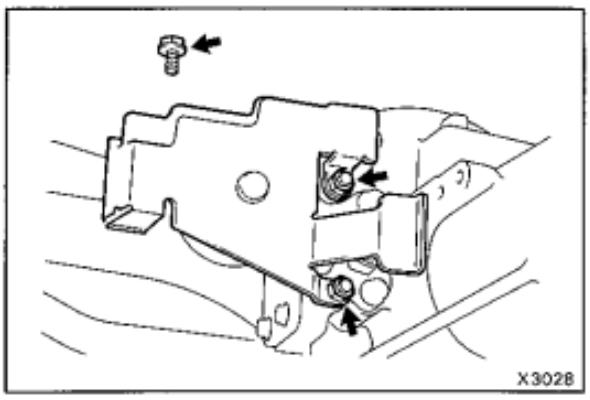

11. INSTALL ACTUATOR PROTECTOR

Install the protector with the two nuts and bolt.

Torque: Nut 360 kg-cm (26 ft-lb, 35 N·m)
Bolt 200 kg-cm (14 ft-lb, 20 N·m)

12. CANCEL REAR DIFFERENTIAL LOCK

With the ignition switch ON, turn the differential lock control switch to OFF to cancel to differential lock.

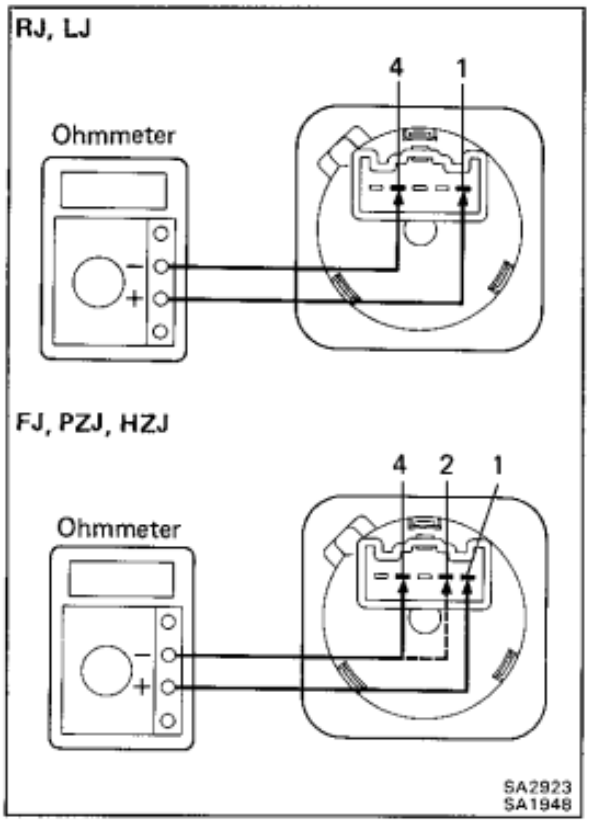

Differential Lock Control Switch

INSPECTION OF DIFFERENTIAL LOCK CONTROL SWITCH

INSPECT SWITCH CONTINUITY

Inspect switch continuity between terminals as shown.

Terminal / Switch position	1 (B)	2 (RF)	4 (R)
OFF			
RR	○		○
FR·RR	○	○	○

If continuity is not as specified, replace the switch.

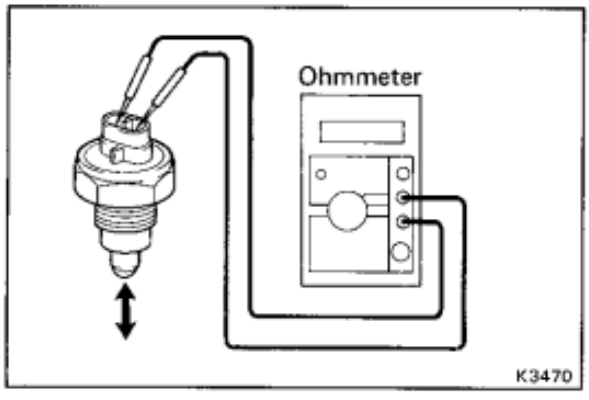

Indicator Switch

INSPECTION ON INDICATOR SWITCH

1. **INSPECT DIFFERENTIAL LOCK INDICATOR SWITCH (FRONT AND REAR)**

   (a) Check that there is continuity between terminals when the switch is pushed (differential connected position).

   (b) Check that there is no continuity when the switch is free (differential disconnected position).

   If operation is not as specified, replace the switch.

2. **INSPECT 4WD INDICATOR SWITCH**
   (See page TF-36)

Combination Meter

INSPECTION OF SPEED SENSOR AND INDICATOR LIGHT

1. **INSPECT SPEED SENSOR**
   (See page BE-57)

2. **INSPECT INDICATOR LIGHT**

LEAF SPRING TYPE REAR SUSPENSION

COMPONENTS

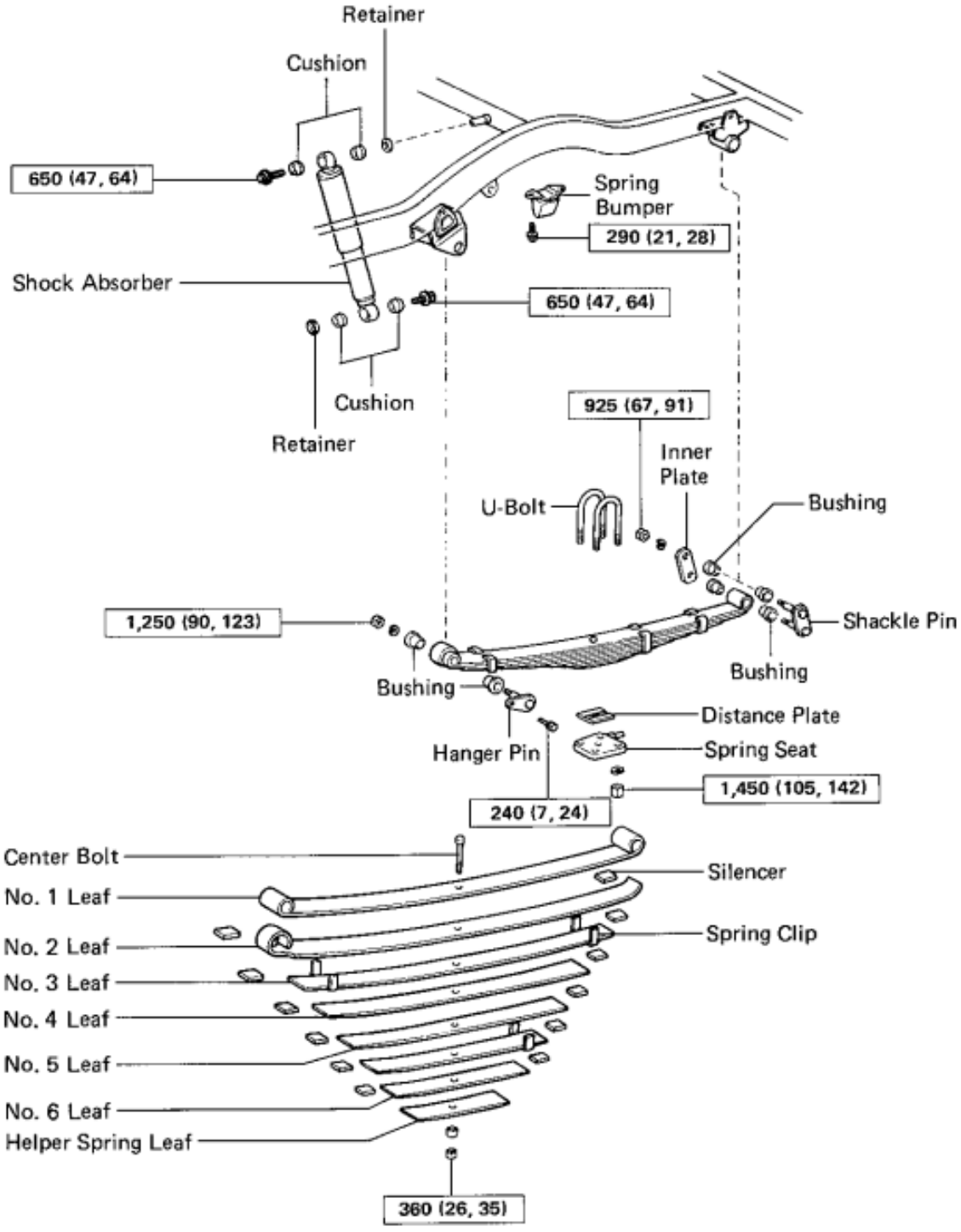

kg-cm (ft-lb, N·m) : Specified torque

SA2560

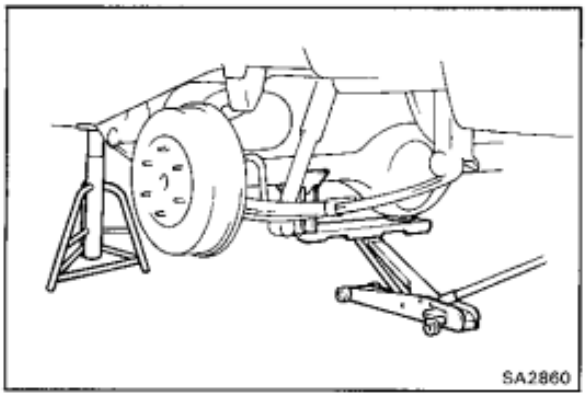
SA2860

REMOVAL OF LEAF SPRING AND SHOCK ABSORBER

(See page SA-192)

1. JACK UP AND SUPPORT VEHICLE WITH STANDS

(a) Jack up and support the frame on stands.

(b) Lower the axle housing until the leaf spring tension is free, and keep it at this position.

2. REMOVE REAR WHEEL

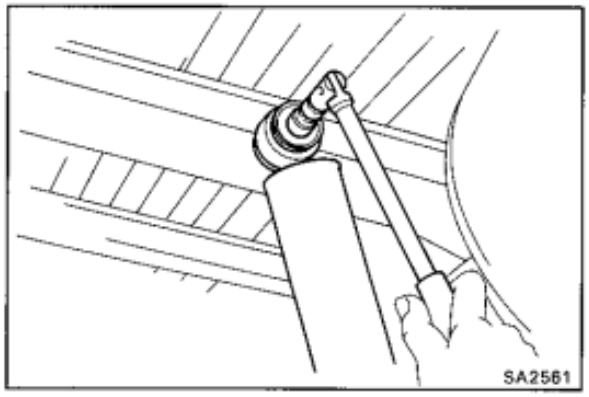
SA2561

3. REMOVE SHOCK ABSORBER

(a) Remove the upper mounting bolt, retainer and cushions and disconnect the shock absorber from the frame.

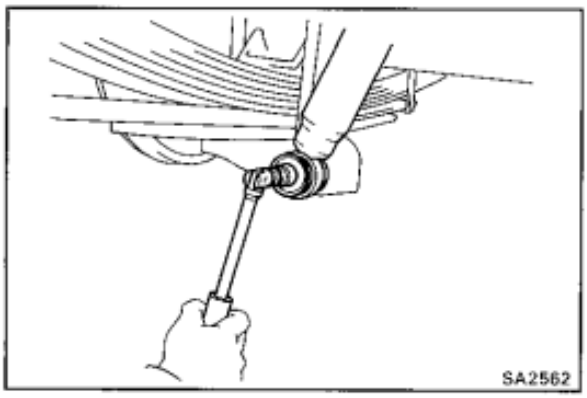
SA2562

(b) Remove the lower mounting bolt, retainer and cushions, disconnect the shock absorber from the spring seat.

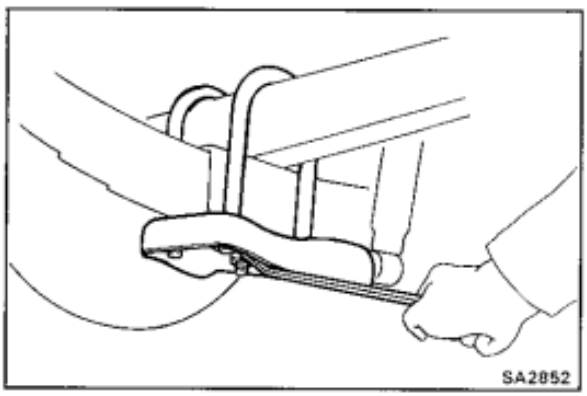
SA2852

4. REMOVE U-BOLTS

(a) Remove the U-bolt mounting nuts.

(b) Remove the spring seat, distance plate and pad.

(c) Remove the two U-bolts.

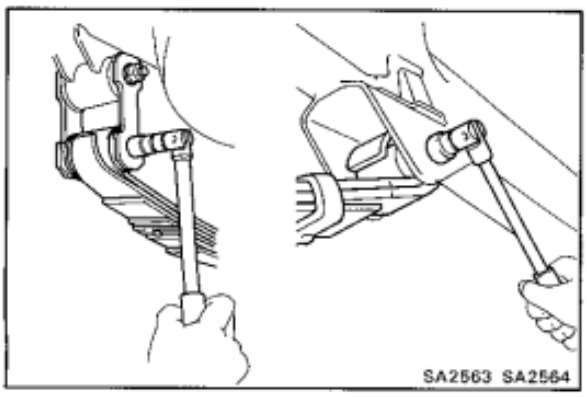
SA2563 SA2564

5. REMOVE LEAF SPRING

(a) Remove the hanger pin mounting nut and washer.

(b) Remove the shackle pin mounting nuts, washers and inner plate.

(c) Remove the bolt and hanger pin.

(d) Remove the shackle pin and leaf spring.

(e) Remove the bushings from the leaf spring.

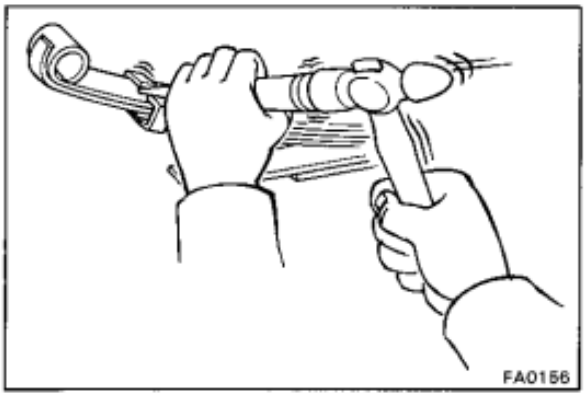

REPLACEMENT OF LEAF SPRING

(See page SA-192)

1. BEND OPEN SPRING CLIP

Using a chisel and hammer, pry out the spring clip.

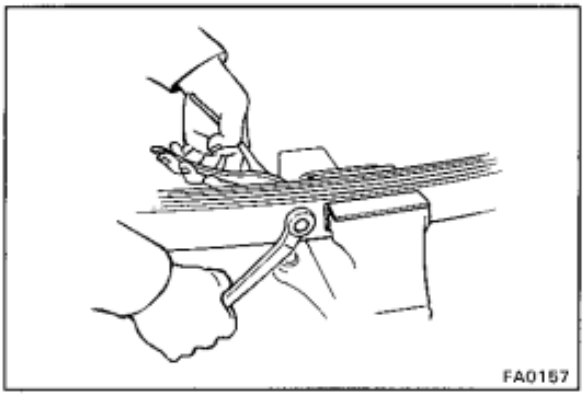

2. REMOVE CENTER BOLT

Hold the spring near the center bolt in a vise and remove the center bolt.

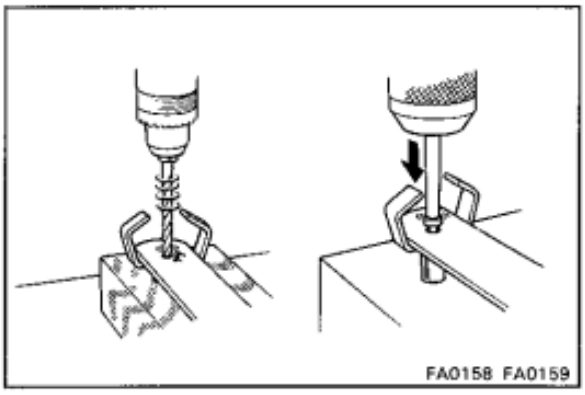

3. IF NECESSARY, REPLACE SPRING CLIP

(a) Drill off the head of the rivet and drive it out.

(b) Install a new rivet into the holes of the leaf spring and clip. Then rivet with a press.

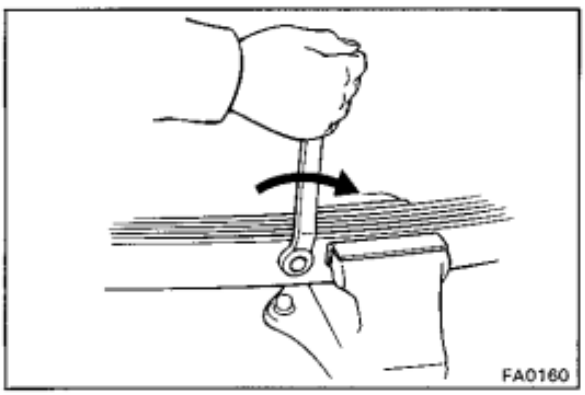

4. INSTALL SPRING CENTER BOLT

(a) Attach the spring silencer.

(b) Align the leaf holes and secure the leaves with a vise.

(c) Install and torque the spring center bolt.

Torque: 360 kg-cm (26 ft-lb, 35 N·m)

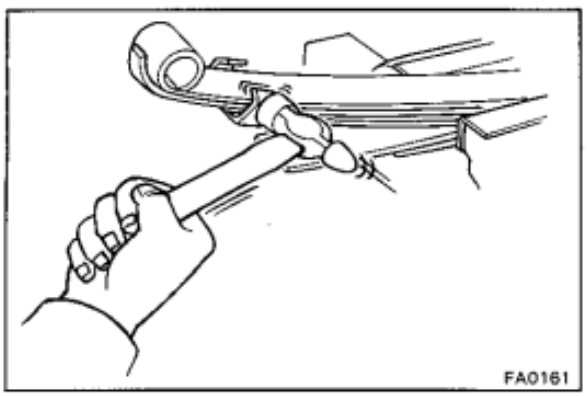

5. BEND SPRING CLIP

Using a hammer, bend the spring clip into position.

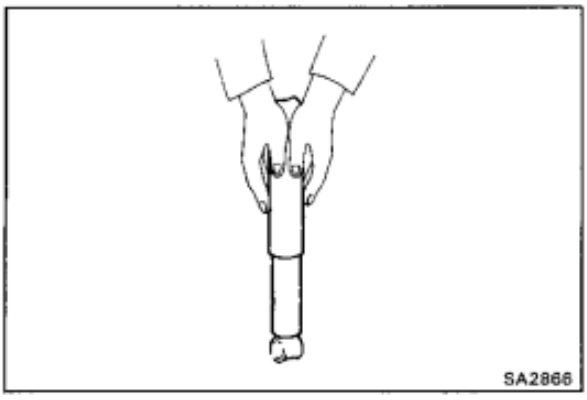
SA2866

INSPECTION OF REAR SHOCK ABSORBER

1. INSPECT OPERATION OF SHOCK ABSORBER

(a) While pushing the shock absorber, check that the pull throughout the stroke is even, and there is no abnormal resistance or noise.

(b) Push the shock absorber in fully and release it. Check that it returns at a constant speed throughout.

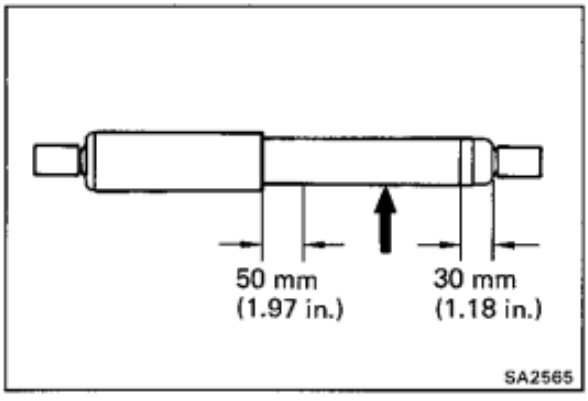

SA2565

2. DISCARD SHOCK ABSORBER

Before discarding the shock absorber, drill a hole 2 — 3 mm (0.079 — 0.118 in.) in diameter at the location shown in the illustration to release the gas inside.

NOTICE:

- **When drilling, chips may fly out, work carefully.**
- **The gas is colorless, odorless, and non-poisonous.**

INSTALLATION OF LEAF SPRING AND SHOCK ABSORBER

(See page SA-192)

1. INSTALL LEAF SPRING

(a) Insert the bushings into both ends of the leaf spring.

(b) Place the leaf spring in the position.

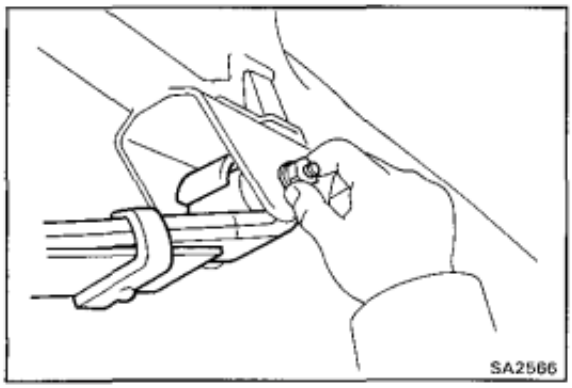

(c) Temporarily install the hanger pin and torque the nut.

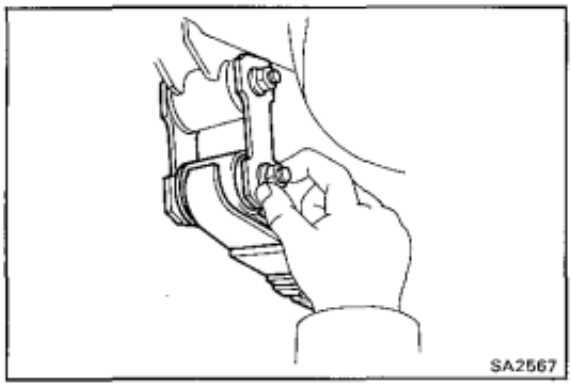

(d) Install the shackle pin.

(e) Install the inner plate, and temporarily install the washers and nuts.

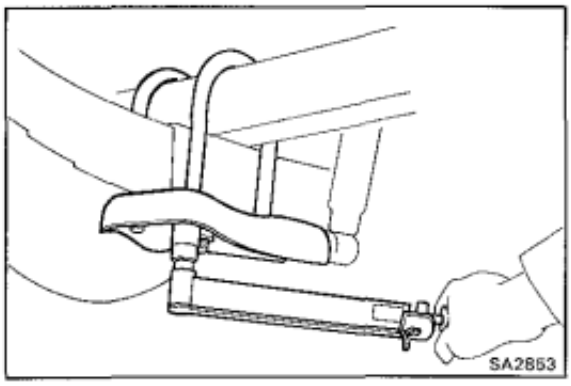

2. INSTALL U-BOLTS

(a) Insert the head of the leaf spring center bolt into the hole in the axle housing bracket and install.
(See page SA-93)

(b) Install the two U-bolts onto the leaf spring.

(c) Install the distance plate and spring seat.
Torque the four U-bolt mounting nuts.

Torque: 1,450 kg-cm (105 ft-lb, 142 N·m)

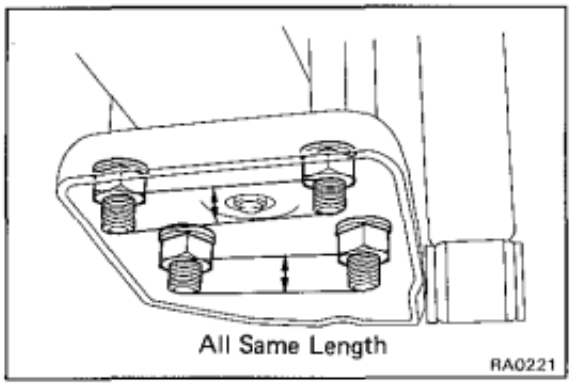

HINT: Torque the U-bolts so that the lengths of all the U-bolts under the spring seat are the same.

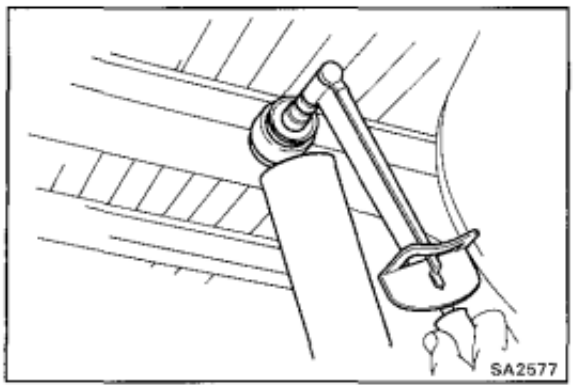

3. INSTALL SHOCK ABSORBER

(a) Connect the shock absorber to the frame with the upper mounting bolt, cushions and retainer. Torque the bolt.

Torque: 650 kg-cm (47 ft-lb, 64 N·m)

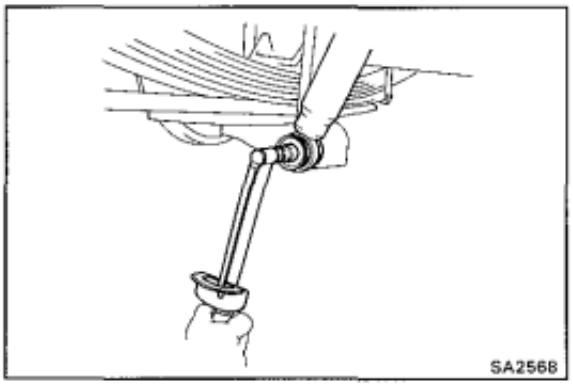

(b) Connect the shock absorber to the spring seat with the lower mounting bolt, cushions and retainer. Torque the bolt.

Torque: 650 kg-cm (47 ft-lb, 64 N·m)

4. INSTALL WHEEL AND LOWER VEHICLE

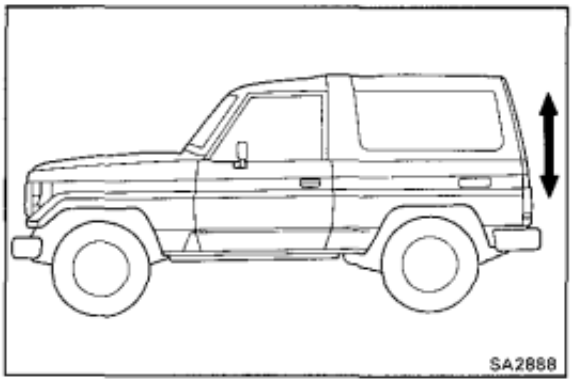

5. STABILIZE SUSPENSION

Bounce the vehicle up and down to stabilize the suspension.

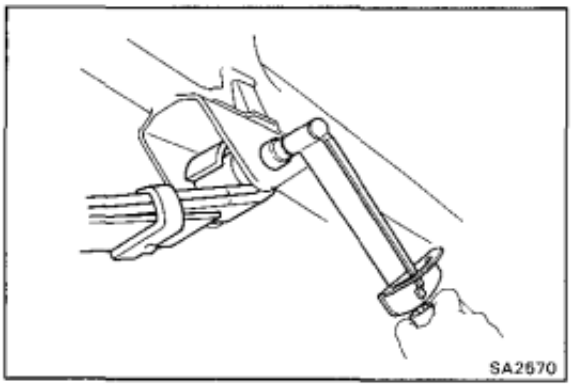

6. TORQUE HANGER PIN AND SHACKLE PIN

(a) Torque the hanger pin nut.

Torque: 1,250 kg-cm (90 ft-lb, 123 N·m)

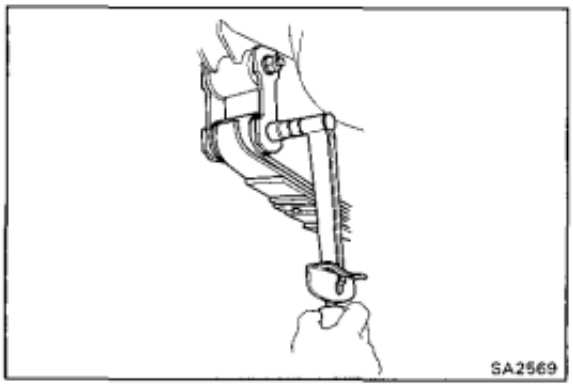

(b) Torque the shackle pin nut.

Torque: 925 kg-cm (67 ft-lb, 91 N·m)

SUSPENSION AND AXLE

Specifications

Cold tire inflation pressure kg/cm² (psi, kPa)	Destination	Model	Tire size	Front	Rear
	Europe	HZJ70, 73	215/80R16	1.8 (26, 180)	2.0 (29, 200)
		PZJ70, 73	265/75R15	1.8 (26, 180)	2.0 (29, 200)
		PZJ75	7.50-16-8PRLT	2.4 (35, 240)	3.5 (51, 350)
			205R16C8PR	2.2 (32, 220)	4.5 (65, 450)
		LJ70, 73	7.00-16-6PRLT	1.8 (26, 180)	2.4 (35, 240)
		RJ70, 73	215/80R16	1.6 (23, 160)	2.0 (29, 200)
			265/75R15	1.8 (26, 180)	2.0 (29, 200)
	Australia	FJ70, 73	7.50R16-6PRLT	2.0 (29, 200)	3.5 (51, 350)
		HZJ70, 73	265/75R15	1.8 (26, 180)	2.0 (29, 200)
		PZJ70, 73			
		FJ75, HZJ75	7.50R16-8PRLT	2.2 (32, 220)	3.9 (57, 390)
		LJ70	205R16C6PR	1.7 (24, 170)	2.2 (32, 220)
		RJ70	265/75R15	1.8 (26, 180)	2.0 (29, 200)
	Middle East	FJ70, 73	7.50-16-8PRLT	1.8 (26, 180)	2.0 (29, 200)
			7.50R16-8PRLT	2.0 (29, 200)	2.25 (33, 225)
			31 × 10.50R15-6PRLT	1.8 (26, 180)	2.5 (36, 250)
		FJ75	7.50-16-8PRLT	2.4 (35, 240)	4.25 (61, 425)
		HZJ75	7.50R16-8PRLT	2.25 (33, 225)	3.75 (54, 375)
		FJ75 HZJ75 PZJ75	9.00-15-6PRLT (Sand)	2.1 (30, 210)	2.8 (41, 280)
		FJ75, 73 PZJ70, 73	7.50R16-8PRLT 7.50R16C-8PR (Sahara)	2.1 (30, 210)	2.7 (39, 270)
		FJ75 HZJ75 PZJ75		2.1 (30, 210)	4.0 (58, 400)
	Others	FJ70, 73	7.00-15-6PRLT	1.8 (26, 180)	2.6 (38, 260)
		PZJ70, 73	7.00-16-6PRLT	1.8 (26, 180)	2.4 (35, 240)
			7.50-16-6PRLT	1.8 (26, 180)	2.0 (29, 200)
			7.50R16-8PRLT	2.0 (29, 200)	2.25 (33, 225)
			31 × 10.50R15-6PRLT	1.8 (26, 180)	2.5 (36, 250)
		FJ75	7.00-16-8PRLT	2.4 (35, 240)	3.5 (51, 350)
		HZJ75	7.50-16-6PRLT	1.8 (26, 180)	–
		PZJ75	7.50-16-8PRLT	–	3.5 (51, 350)
			7.50-16-8PRLT	2.4 (35, 240)	4.25 (62, 425)
			7.50R16-8PRLT	2.25 (32, 225)	3.75 (54, 375)
		LJ70, 72	7.00-15-6PRLT	1.8 (26, 180)	2.2 (32, 220)
		RJ70	7.00-16-6PRLT	1.8 (26, 180)	2.0 (29, 200)
			7.50-16-6PRLT	1.8 (26, 180)	1.8 (26, 180)
			205R16C 6PR	1.7 (25, 170)	2.0 (29, 200)
			31 × 10.50R15-6PRLT	1.8 (26, 180)	2.1 (32, 210)
		FJ70, 73 PZJ70, 73	7.50R16-8PRLT 7.50R16C 8PR (Sahara)	2.1 (32, 210)	2.7 (41, 270)
		FJ75 HZJ75 PZJ75		2.1 (32, 210)	4.0 (60, 400)

Specifications (Cont'd)

Chassis ground clearance mm (in.)	Tire size		Front	Rear	
	7.00-15-6PRLT		471 (18.54)	473 (18.62)	
	215/80R16		458 (18.03)	460 (18.11)	
	205R16C 6RR		459 (18.07)	461 (18.15)	
	265/75R15		476 (18.74)	478 (18.82)	
	31 × 10.50R15-6PRLT		476 (18.74)	478 (18.82)	
	7.00-16-6PRLT		483 (19.01)	485 (19.09)	
	7.50-16-6PRLT		499 (19.66)	501 (19.72)	
Front wheel alignment	Suspension type				
	Leaf spring type	Camber Left-right error		1°00′ ± 45′ (1° ± 0.75°) 30′ (0.5°) or less	
		Steering axis inclination Left-right error		12°00′ ± 45′ (12° ± 0.75°) 30′ (0.5°) or less	
		Caster (Left-right error)	Series	Angle	
			Short, Middle Semi-long	1°15′ ± 1° (1.25° ± 1°) (30′ (0.5°) or less)	
			Long (Van)	0°50′ ±1° (0.83° ± 1°) (30′ (0.5°) or less)	
			Long (Pickup)	0°30′ ± 1° (0.5° ± 1°) (30′ (0.5°) or less)	
		Toe-in	Tire	Inspection STD	Adjustment STD
			Radial (•31 × 10.50R15 -6PRLT •265/75R15)	−1 ± 2 mm (−0.04 ± 0.08 in.)	−1 ± 1 mm (−0.04 ± 0.04 in.)
			Radial (•Others)	1 ± 2 mm (0.04 ± 0.08 in.)	1 ± 1 mm (0.04 ± 0.04 in.)
			Bias	4 ± 2 mm (0.16 ± 0.08 in.)	4 ± 1 mm (0.16 ± 0.04 in.)
		Wheel angle (Max.)	Tire size	Inside wheel	Outside wheel
			7.50-16-8PRLT 7.50R16-8PRLT 9.00-16-6PRLT 7.50-16-6PRLT	30° +0° −3°	28°
			Others	32° +0° −3°	30°
		Side side (Reference only)		Less than 3.0 mm/m (0.118 in./3.3 ft)	
	Coil spring type	Camber Left-right error		1° ± 1° 30′ (0.5°) or less	
		Steering axis inclination Left-right error		9°30′ ± 1° (9.5° ± 1°) 30′ (0.5°) or less	
		Caster Left-right error		4°05′ ± 1° (4.08° ± 1°) 30′ (0.5°) or less	
		Toe-in	Tire size	Inspection STD	Adjustment STD
			7.00-15-6PRLT 7.00-16-6PRLT 7.50-16-6PRLT	4 ± 2 mm (0.16 ± 0.08 in.)	4 ± 1 mm (0.16 ± 0.04 in.)
			215/80R16 20516C 6PR	1 ± 2 mm (0.04 ± 0.08 in.)	1 ± 1 mm (0.04 ± 0.04 in.)
			265/75R15 31 × 10.50R15 -6PRLT	−1 ± 2 mm (−0.04 ± 0.08 in.)	−1 ± 1 mm (−0.04 ± 0.04 in.)
		Wheel angle	Max.	Inside wheel	Outside wheel
				32°00′ +0° −3°	30°00′
		Side slip (Reference only)		Less than 3.0 mm/m (0.118 in./3.3 ft)	

Specifications (Cont'd)

Front suspension	Wheel lateral runout		1.2 mm	0.047 in.	
	Free wheeling hub ring oil clearance		0.3 mm	0.012 in.	
	Power locking hub brush height				
	Standard height	A	6.5 mm	0.256 in.	
		B	4.7 mm	0.186 in.	
	Minimum height	A	4.2 mm	0.165 in.	
		B	3.1 mm	0.122 in.	
	Wheel bearing preload (rotating load at hub bolt)		2.8 – 5.7 kg	6.2 – 12.6 lb	27 – 56 N
	Steering knuckle bearing preload (rotating load at knuckle arm end, before installing dust seal)		3.0 – 6.0 kg	6.6 – 13.2 lb	29 – 59 N
	Steering knuckle preload adjusting shim thickness		0.1 mm	0.004 in.	
			0.2 mm	0.008 in.	
			0.3 mm	0.012 in.	
			0.5 mm	0.020 in.	
			1.0 mm	0.039 in.	
	Steering knuckle bearing preload (rotating load at knuckle arm end, after installing dust seal)		2.5 – 5.0 kg	5.6 – 11.0 lb	25 – 49 N
Front differential	Drive pinion bearing preload (at starting)				
	RJ and LJ series				
	New bearing		19 – 26 kg-cm	16.5 – 22.6 in.-lb	1.9 – 2.5 N·m
	Reused bearing		9 – 13 kg-cm	7.8 – 11.3 in.-lb	0.9 – 1.3 N·m
	FJ, PZJ and HZJ series				
	New bearing		10 – 16 kg-cm	8.7 – 13.9 in.-lb	1.0 – 1.6 N·m
	Reused bearing		5 – 8 kg-cm	4.3 – 6.9 in.-lb	0.5 – 0.8 N·m
	Total preload (at starting)		Add drive pinion bearing preload		
			4 – 6 kg-cm	3.5 – 5.2 in.-lb	0.4 – 0.6 N·m
	Drive pinion to ring gear backlash		0.13 – 0.18 mm	0.0051 – 0.0071 in.	
	Pinion gear to side gear backlash		0.05 – 0.20 mm	0.0020 – 0.0079 in.	
	Ring gear runout	Limit	0.10 mm	0.0039 in.	
	Companion flange deviation	Limit			
	Radial		0.10 mm	0.0039 in.	
	Lateral		0.10 mm	0.0039 in.	
	Side gear thrust washer thickness				
	2 pinion type		1.6 mm	0.063 in.	
			1.7 mm	0.067 in.	
			1.8 mm	0.071 in.	
	4 pinion type (include w/ Differential lock)		0.9 mm	0.035 in.	
			1.0 mm	0.039 in.	
			1.1 mm	0.043 in.	
			1.2 mm	0.047 in.	
			1.3 mm	0.051 in.	

Specifications (Cont'd)

Front differential (cont'd)	Drive pinion adjusting plate washer thickness	1.70 mm	0.0669 in.
		1.73 mm	0.0681 in.
		1.76 mm	0.0693 in.
		1.79 mm	0.0705 in.
		1.82 mm	0.0717 in.
		1.85 mm	0.0728 in.
		1.88 mm	0.0740 in.
		1.91 mm	0.0752 in.
		1.94 mm	0.0764 in.
		1.97 mm	0.0776 in.
		2.00 mm	0.0787 in.
		2.03 mm	0.0799 in.
		2.06 mm	0.0811 in.
		2.09 mm	0.0823 in.
		2.12 mm	0.0835 in.
		2.15 mm	0.0846 in.
		2.18 mm	0.0858 in.
		2.21 mm	0.0870 in.
		2.24 mm	0.0882 in.
		2.27 mm	0.0894 in.
		2.30 mm	0.0906 in.
		2.33 mm	0.0917 in.
	Rear oil seal drive in depth	1.0 mm	0.039 in.
Rear suspension	Rear axle shaft Maximum runout	0.8 mm	0.031 in.
	Hub axial play	Less than 0.1 mm (0.004 in.)	
	Wheel bearing preload (at starting)	0.4 – 3.3 kg	0.9 – 7.3 lb 4 – 32 N
	Axle housing and lock nut distance	−0.2 – 0.9 kg	−0.008 – 0.035 in.
Rear differential (8 in. type)	Drive pinion preload (at starting)		
	New bearing	10 – 16 kg-cm	8.7 – 13.9 in.-lb 1.0 – 1.6 N·m
	Reused bearing	5 – 8 kg-cm	4.3 – 6.9 in.-lb 0.5 – 0.8 N·m
	Total preload (at starting)	Add drive pinion bearing preload	
		4 – 6 kg-cm	3.5 – 5.2 in.-lb 0.4 – 0.6 N·m
	Drive pinion to ring gear backlash	0.13 – 0.18 mm	0.0051 – 0.0071 in.
	Pinion gear to side gear backlash	0.05 – 0.20 mm	0.0020 – 0.0079 in.
	Ring gear runout Limit	0.10 mm	0.0039 in.
	Companion flange deviation Limit		
	Radial	0.10 mm	0.0039 in.
	Leteral	0.10 mm	0.0039 in.
	Side gear thrust washer thickness		
	4 pinion type (include w/ Differential lock)	0.9 mm	0.035 in.
		1.0 mm	0.039 in.
		1.1 mm	0.043 in.
		1.2 mm	0.047 in.
		1.3 mm	0.051 in.
	LSD type Mark		
	A	0.15 mm	0.0059 in.
	B	0.20 mm	0.0079 in.
	C	0.25 mm	0.0098 in.
	D	0.30 mm	0.0118 in.
	E	0.35 mm	0.0138 in.

Specifications (Cont'd)

Rear differential (8 in. type) (cont'd)	Drive pinion adjusting plate washer thickness	1.70 mm	0.0669 in.	
		1.73 mm	0.0681 in.	
		1.76 mm	0.0693 in.	
		1.79 mm	0.0705 in.	
		1.82 mm	0.0717 in.	
		1.85 mm	0.0728 in.	
		1.88 mm	0.0740 in.	
		1.91 mm	0.0752 in.	
		1.94 mm	0.0764 in.	
		1.97 mm	0.0776 in.	
		2.00 mm	0.0787 in.	
		2.03 mm	0.0799 in.	
		2.06 mm	0.0811 in.	
		2.09 mm	0.0823 in.	
		2.12 mm	0.0835 in.	
		2.15 mm	0.0846 in.	
		2.18 mm	0.0858 in.	
		2.21 mm	0.0870 in.	
		2.24 mm	0.0882 in.	
		2.27 mm	0.0894 in.	
		2.30 mm	0.0906 in.	
		2.33 mm	0.0917 in.	
	Front oil seal drive in depth	1.0 mm	0.039 in.	
Rear differential (9.5 in. type)	Drive pinion bearing preload (at starting)			
	New bearing	13 – 20 kg-cm	11.3 – 17.4 in.-lb	1.3 – 2.0 N·m
	Reused bearing	7 – 10 kg-cm	6.1 – 8.7 in.-lb	0.7 – 1.0 N·m
	Total preload (at starting)	Add drive pinion bearing preload		
	2 pinion and LSD types	4 – 6 kg-cm	3.5 – 5.2 in.-lb	0.4 – 0.6 N·m
	w/ Differential lock	3 – 7 kg-cm	2.6 – 6.1 in.-lb	0.3 – 0.7 N·m
	Drive pinion to ring gear backlash	0.15 – 0.20 mm	0.0059 – 0.0079 in.	
	Pinion gear to side gear backlash			
	Ex. LSD type	0.02 – 0.20 mm	0.0008 – 0.0079 in.	
	LSD type	0.02 – 0.24 mm	0.0008 – 0.0094 in.	
	Ring gear runout Limit	0.10 mm	0.0039 in.	
	Companion flange deviation Limit			
	Radial	0.10 mm	0.0039 in.	
	Leteral	0.10 mm	0.0039 in.	
	Side gear thrust washer thickness			
	Ex. LSD type	1.60 mm	0.0630 in.	
		1.75 mm	0.0689 in.	
		1.90 mm	0.0748 in.	
		2.05 mm	0.0807 in.	
	LSD type	0.20 mm	0.0079 in.	
		0.25 mm	0.0098 in.	
		0.30 mm	0.0118 in.	
		0.35 mm	0.0138 in.	
	Drive pinion adjusting plate washer thickness	1.05 mm	0.0413 in.	
		1.10 mm	0.0433 in.	
		1.15 mm	0.0453 in.	
		1.20 mm	0.0472 in.	
		1.25 mm	0.0492 in.	
		1.30 mm	0.0512 in.	
		1.35 mm	0.0531 in.	
		1.40 mm	0.0551 in.	
		1.45 mm	0.0571 in.	
		1.50 mm	0.0591 in.	
		1.55 mm	0.0610 in.	

Specifications (Cont'd)

Rear differential (9.5 in. type) (cont'd)	Side bearing adjusting plate thickness (w/ Differential lock only)	2.67 mm	0.1051 in.
		2.70 mm	0.1063 in.
		2.73 mm	0.1075 in.
		2.76 mm	0.1087 in.
		2.79 mm	0.1098 in.
		2.82 mm	0.1110 in.
		2.85 mm	0.1122 in.
		2.88 mm	0.1134 in.
		2.91 mm	0.1146 in.
		2.94 mm	0.1157 in.
		2.97 mm	0.1169 in.
		3.00 mm	0.1181 in.
		3.03 mm	0.1193 in.
		3.06 mm	0.1205 in.
		3.09 mm	0.1217 in.
		3.12 mm	0.1228 in.
		3.15 mm	0.1240 in.
		3.18 mm	0.1252 in.
		3.21 mm	0.1264 in.
		3.24 mm	0.1276 in.
		3.27 mm	0.1287 in.
		3.30 mm	0.1299 in.
		3.33 mm	0.1311 in.
	Front oil seal drive in depth	1.0 mm	0.039 in.

Torque Specifications

	Part tightened	kg-cm	ft-lb	N·m
Front axle and suspension	Free wheeling hub body × Axle hub	315	23	31
	Free wheeling hub body × Free wheeling hub cover	100	7	10
	Electrical locking hub body subassembly × Axle hub	315	23	31
	Electrical locking hub cover subassembly × Electrical locking hub body subassembly	315	23	31
	Electrical locking hub slip ring mounting nut	75	65 in.-lb	7.4
	Axle hub × Flange	315	23	31
	Hub bearing lock nut	650	47	64
	Axle carrier × Disc brake cylinder (w/ Disc brake)	1,250	90	123
	Disc brake cylinder (w/ Disc brake) × Brake tube	155	11	15
	Axle carrier × Dust seal	475	34	47
	Knuckle arm × Tie rod end	925	67	91
	Steering knuckle × Knuckle arm	980	71	96
	Steering knuckle × Bearing cap	980	71	96
	Steering knuckle × Third arm	980	71	96
	Steering knuckle × Oil seal retainer	55	48 in.-lb	5.4
	(Leaf Spring Type)			
	Shock absorber × Frame	320	23	31
	Shock absorber × Axle housing	650	47	64
	Spring bumper × Frame	290	21	28
	Rear spring bracket × Frame	1,250	90	123
	Front spring shackle × Leaf spring	925	67	91
	Spring U bolt × Spring seat	1,450	105	142
	Leaf spring center bolt	360	26	35
	Hanger pin × Frame	240	17	24
	Stabilizer bar bracket × Axle housing	120	9	12
	Stabilizer bar × Frame	250	17	24

Torque Specifications (Cont'd)

	Part tightened	kg-cm	ft-lb	N·m
Front axle and suspension (cont'd)	**(Coil Spring Type)**			
	Shock absorber × Frame	1,800	130	177
	Shock absorber × Axle housing	320	23	31
	Lateral control rod × Axle housing	1,460	106	143
	Lateral control rod × Frame	1,000	72	98
	Leading arm × Axle housing	1,750	127	171
	Leading arm × Frame	1,750	127	171
	Stabilizer link × Frame	1,150	83	113
	Stabilizer link × Stabilizer bar bracket	185	13	18
	Stabilizer bar bracket × Axle housing	185	13	18
Rear axle and suspension	**(Semi-Floting Type)**			
	Differential cover × Axle housing	130	9	13
	Differential cover × LSPV shackle bracket	195	14	19
	Differential cover × Parking brake cable clamp	130	9	13
	Pinion shaft pin	275	20	27
	Drain plug	500	36	49
	Axle carrier × Disc brake cylinder (w/ Disc brake)	900	65	88
	(Full-Floating Type)			
	Axle housing × Backing plate	1,250	90	123
	Bearing lock nut	600	43	59
	Axle hub × Axle shaft	175	13	17
	Disc brake cylinder (w/ Disc brake) × Axle carrier	900	65	88
	(Leaf Sping Type)			
	Shock absorber × Frame	650	47	64
	Shock absorber × Axle housing	375	27	37
	Spring bumper × Frame	290	21	28
	Front spring bracket × Hanger pin	1,250	90	123
	Front spring shackle × Leaf spring	925	67	91
	Hanger pin × Frame	240	17	24
	Spring U bolt × Spring seat	1,450	105	142
	Leaf spring center bolt	500	36	49
	(Coil Spring Type)			
	Shock absorber × Frame	650	47	64
	Shock absorber × Axle housing	320	23	31
	Lateral control rod × Frame	1,460	106	143
	Lateral control rod × Axle housing	1,000	72	98
	Trailing arm × Frame	2,500	181	245
	Trailing arm × Axle housing	2,500	181	245
Differential (8 in. type)	Propeller shaft × Companion flange	750	54	74
	Drive pinion × Companion flange	2,000 – 3,500	145 – 253	196 – 343
	Ring gear × Differential case	985	71	97
	Side bearing cap × Differential carrier	800	58	78
	Differential carrier × Axle housing	250	18	25
	Differential LH case × RH case	480	35	47
	Differential lock shaft retainer	240	17	24
	Differential lock straight screw plug	220	16	22
	Differential lock indicator switch	410	30	40
	Differential lock actuator	270	20	26

Torque Specifications (Cont'd)

	Part tightened	kg-cm	ft-lb	N·m
Differential (9.5 in. type)	Propeller shaft × Companion flange	900	65	88
	Drive pinion × Companion flange	2,500 – 4,500	181 – 325	245 – 441
	Ring gear × Differential case	1,125	81	110
	Side bearing cap × Differential carrier			
	(2 pinion and LSD types)	800	58	78
	(w/ Differential lock)	1,150	83	113
	Differential carrier × Axle housing	475	34	47
	Differential LH case × RH case	480	35	47
	Pinion shaft pin (2 pinion type)	275	18	25
	Differential case × Case cover	590	43	58
	Differential lock shift fork set bolt	200	14	20
	Differential lock actuator	240	17	24
	Differential lock cover	185	13	18
	Differential lock indicator switch	410	30	40

PRECAUTIONS

1. **Care must be taken to replace each part properly as it could affect the performance of the brake system and result in a driving hazard. Replace the parts with parts of the same part number or equivalent.**

2. **It is very important to keep parts and the area clean when repairing the brake system.**

TROUBLESHOOTING

Problem	Possible cause	Remedy	Page
Low or spongy pedal	Linings worn	Replace brake shoes	BR-62, 76
	Leak in brake system	Repair leak	93
	Master cylinder faulty	Repair or replace master cylinder	BR-10
	Air in brake system	Bleed brake system	BR-7
	Wheel cylinder faulty	Repair wheel cylinder	BR-62, 76
	Piston seals worn or damaged	Repair brake cylinder	BR-69, 86
	Rear brake automatic adjuster faulty	Repair or replace adjuster	BR-62, 76 93
Brakes drag	Parking brake out of adjustment	Adjust parking brake	BR-9
	Binding parking brake wire	Repair as necessary	
	Booster push rod out of adjustment	Adjust push rod	BR-47
	Tension or return spring faulty	Replace spring	BR-62, 76 93
	Brake line restricted	Repair as necessary	
	Lining cracked or distorted	Replace shoe	BR-69, 86
	Wheel cylinder or caliper piston sticking	Repair as necessary	BR-69, 86
	Adjuster broken	Replace adjuster	BR-62, 76 93
	Master cylinder faulty	Repair or replace master cylinder	BR-11
Brakes pull	Tires improperly inflated	Inflate tires to proper pressure	
	Oil or grease on shoes or pads	Check for cause. Replace shoes or pads	BR-69, 86
	Brake shoes distorted, linings worn or glazed	Replace brake shoes	BR-69, 86
	Brake pads distorted, worn or glazed	Replace pads	BR-69, 86
	Drum or disc out of round	Replace drum or disc	BR-62, 76
	Tension or return spring faulty	Replace spring	BR-69, 86
	Wheel cylinder faulty	Repair wheel cylinder	BR-69, 86
	Piston frozen in brake cylinder	Repair cylinder	BR-62, 76
	Brake pad sticking	Replace pads	BR-62, 76

TROUBLESHOOTING (Cont'd)

Problem	Possible cause	Remedy	Page
Hard pedal but brakes inefficient	Oil or grease on linings	Check for cause. Replace shoes or pads	BR-62, 76 93
	Brake shoes distorted, linings worn or glazed, drums worn	Replace brake shoes	BR-69, 86
	Brake pads distorted, worn or glazed	Replace pads	BR-69, 86
	Piston frozen in brake cylinder	Repair cylinder	BR-69, 86
	Brake booster faulty	Repair booster	BR-17
	Vacuum leaks	Repair as necessary	
	Vacuum pump faulty	Repair or replace vacuum pump	BR-49
	Brake line restricted	Repair as necessary	
Snapping or clicking noise when brakes are applied	(Drum brake)		
	Brake shoes binding at backing plate ledges	Lubricate	BR-62, 76 93
	Backing plate ledges worn	Replace and lubricate ledges	BR-62, 76 93
	Loose or missing shoe hold-down spring	Replace shoe hold-down spring	BR-62, 76 93
	Loose set bolt at backing plate	Tighten	BR-62, 76 93
	(Disk brake)		
	Loose or missing pad support plate	Replace pad support plate	BR-69, 86
	Loose installation bolt	Tighten	BR-69, 86
	Wear on slide bushing	Replace slide bushing	BR-69, 86
Scraping or grinding noise when brakes are applied	Worn brake linings or pads	Replace or refinish drums or rotors if heavily scored	BR-62, 76
	Caliper to wheel or rotor interference	Replace as required	BR-69, 86
	Dust cover to rotor or backing plate to drum interference	Correct or replace	BR-62, 76
	Other brake system components faulty	Repair or replace as necessary	
	Tires rubbing against chassis and/or body	Repair as necessary	

TROUBLESHOOTING (Cont'd)

Problem	Possible cause	Remedy	Page
Squeaking, squealing groaning or chattering noise when brakes are applied HINT: Brake friction materials inherently generate noise and heat in order to dissipate energy. As a result, occasional squeal is normal and is aggravated by severe environmental conditions such as cold, heat, wetness, snow, salt, mud, etc. This occasional squeal is not a functional problem and does not indicate any loss of brake effectiveness	Brake drums and linings, rotors and pads worn or scored	Inspect, repair or replace	BR-62, 76
	Dirty, greased, contaminated or glazed linings or pads	Clean or replace	
	Improper linings or pads using	Inspect for correct usage or replace	
	Maladjustment of brake pedal or booster push rod	Inspect and adjust	BR-6, 47
	(Disc brake)		
	Missing or damaged brake pad anti-squeal shim	Replace	BR-69, 86
	Pad wear and pad wear indicator making contact with the rotor	Replace	BR-69, 86
	Burred or rusted calipers	Clean or deburr	BR-69, 86
	(Drum brake)		
	Weak damaged or incorrect shoe hold-down springs, loose or damaged shoe hold-down spring pins and springs and grooved backing plate ledges	Inspect, repair or replace	BR-62, 76 93
Squealing and squeaking noise when brakes are not applied	Maladjustment of brake pedal or booster push rod	Inspect and adjust	BR-6, 47
	Poor return of brake booster or master cylinder or wheel cylinder	Inspect, repair or replace	BR-10, 17
	(Disc brake)		
	Rusted or stuck piston	Inspect and lubricate as necessary	BR-69, 86
	Improper positioning of pad in caliper	Reinstall correctly	BR-69, 86
	Rotor rubbing against caliper housing	Inspect and replace	BR-69, 86
	Improper installation of disc brake pad support plate	Reinstall correctly	BR-69, 86
	Pad wear and pad wear indicator making contact with the rotor	Replace	BR-69, 86
	(Drum brake)		
	Weak, damaged or incorrect shoe hold-down springs	Replace	BR-62, 76 93
	Grooved backing plate ledges	Replace	BR-62, 76 93
	Bent or warped backing plate causing interference with drum	Repair or replace	
	Improper machining of drum causing interference with backing plate or shoe	Replace drum	BR-62, 76 93
	Other brake system components: Loose or extra parts in brakes Rear drum adjustment too tight causing lining to glaze Worn, damaged or insufficiently lubricated wheel bearings	Inspect, repair or replace as necessary	BR-62, 76 93

TROUBLESHOOTING (Cont'd)

Problem	Possible cause	Remedy	Page
Groaning, clicking or rattling noise when brakes are not applied	Stones or foreign material trapped inside wheel covers	Remove foreign material	
	Loose wheel nuts	Tighten to correct torque	
		Replace if stud holes are elongated	
	Maladjustment of brake pedal or booster push rod	Inspect and adjust	BR-6, 47
	Worn, damaged or dry wheel bearings	Inspect and lubricate or replace	
	(Disc brake)		
	Loose or missing anti-rattle spring or pad support plate or crimping on outer pad	Inspect, repair or replace	BR-69, 86
	Failure of shim	Inspect, replace if necessary	BR-69, 86
	Wear on slide bushing	Inspect, replace if necessary	BR-69, 86
	Loose installation bolt	Inspect, tighten if necessary	BR-69, 86
	Poor return of piston	Inspect, repair or replace	BR-69, 86
	(Drum brake)		
	Loose or extra parts	Inspect and repair	BR-62, 76 93

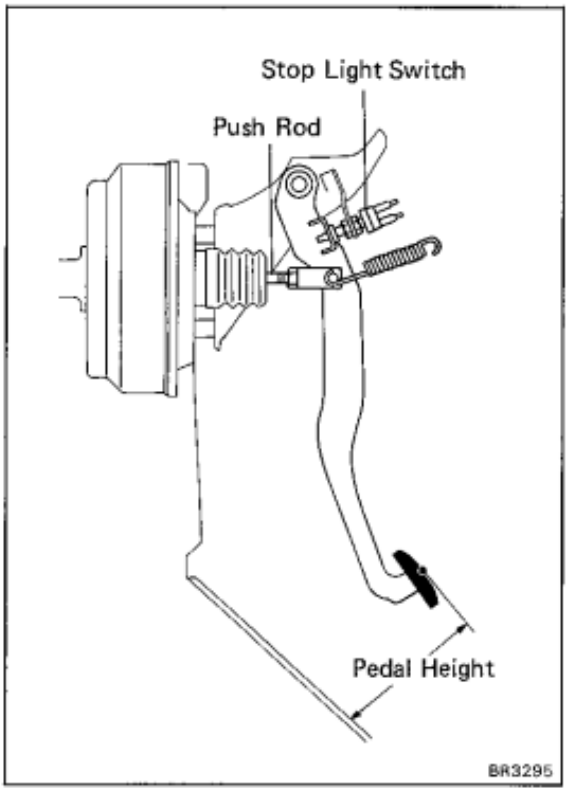

CHECKS AND ADJUSTMENTS

CHECK AND ADJUSTMENT OF BRAKE PEDAL

1. CHECK THAT PEDAL HEIGHT IS CORRECT

Pedal height from asphalt sheet: 161—171 mm (6.34—6.73 in.)

If incorrect, adjust the pedal height.

2. IF NECESSARY, ADJUST PEDAL HEIGHT

(a) Sufficiently loosen the stop light switch.

(b) Loosen the clevis lock nut.

(c) Adjust the pedal height by turning the pedal push rod.

(d) Return the stop light switch until its body lightly contacts the pedal stopper.

(e) After adjusting the pedal height, check and adjust the pedal freeplay.

(f) Tighten the clevis lock nut.

Torque: 375 kg-cm (27 ft-lb, 37 N·m)

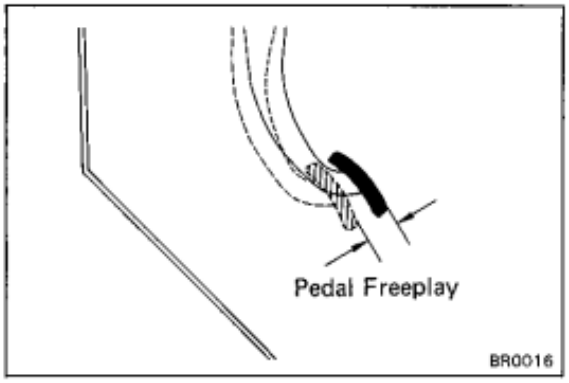

3. CHECK PEDAL FREEPLAY

(a) Stop the engine and depress the brake pedal several times until there is no more vacuum left in the booster.

(b) Push in the pedal until the beginning of resistance is felt. Measure the distance, as shown.

Pedal freeplay: 3 — 6 mm (0.12 — 0.24 in.)

4. IF NECESSARY, ADJUST PEDAL FREEPLAY

(a) If incorrect, adjust the pedal freeplay by turning the pedal push rod.

(b) Start the engine and confirm that pedal freeplay exists.

(c) After adjusting the pedal freeplay, check the pedal height.

5. CHECK THAT PEDAL RESERVE DISTANCE IS CORRECT

Release the parking brake lever.

With engine running, depress the pedal and measure the pedal reserve distance, as shown.

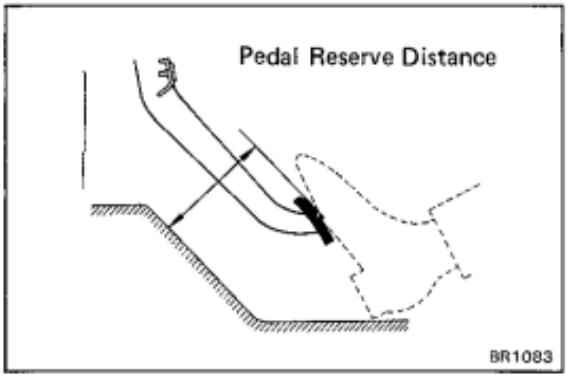

Pedal reserve distance from asphalt sheet at 50 kg (110 lb, 490 N):

Front disc type	**More than 68 mm (2.68 in.)**
Front drum type	
• **Heavy-Duty**	
70, 73 series	**More than 100 mm (3.94 in.)**
75 series	**More than 90 mm (3.54 in.)**
• **Light-Duty**	**More than 105 mm (4.13 in.)**

If incorrect, troubleshoot the brake system.

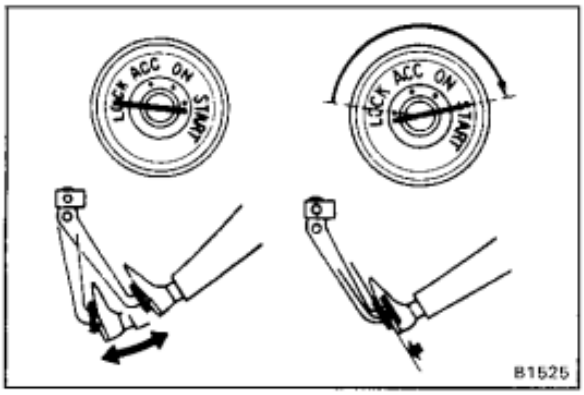

OPERATIONAL TEST OF BRAKE BOOSTER

HINT: If the booster leaks or lacks of vacuum, repair before testing.

1. OPERATING CHECK

(a) Depress the brake pedal several times with the engine off, and check that there is no change in the pedal reserve distance.

(b) Depress the brake pedal and start the engine. If the pedal goes down slightly, operation is normal.

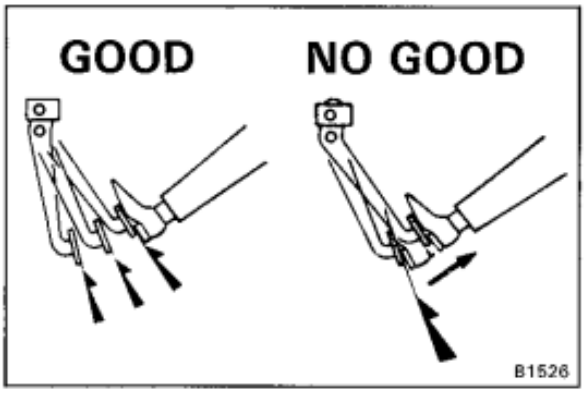

2. AIR TIGHTNESS CHECK

(a) Start the engine and stop it after one or two minutes. Depress the brake pedal several times slowly. If the pedal goes down the farthest the first time, but gradually rises after the second or third time, the booster is air tight.

(b) Depress the brake pedal while the engine is running, and stop it with the pedal depressed. If there is no change in pedal reserve travel after holding the pedal for thirty seconds, the booster is air tight.

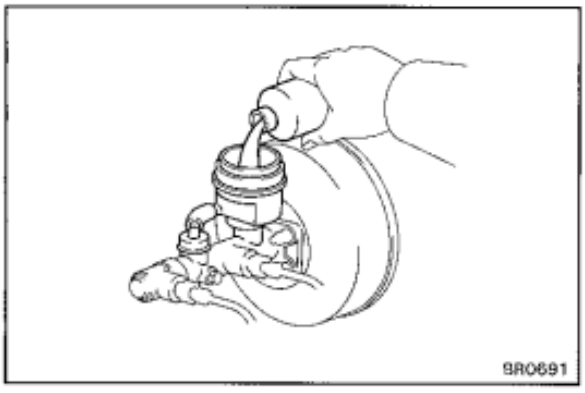

BLEEDING OF BRAKE SYSTEM

HINT: If any work is done on the brake system or if air is suspected in the brake lines, bleed the system of air.

NOTICE: Do not let brake fluid remain on a painted surface. Wash it off immediately.

1. FILL BRAKE RESERVOIR WITH BRAKE FLUID

Check the reservoir after bleeding each wheel. Add fluid, if necessary.

Brake fluid: SAE J1703 or FMVSS No.116 DOT3

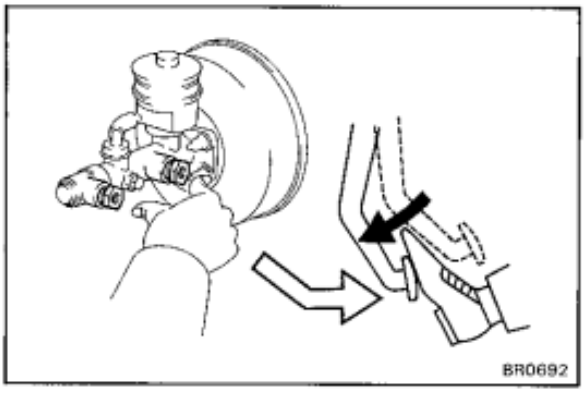

2. BLEED MASTER CYLINDER

HINT: If the master cylinder was disassembled or if the reservoir becomes empty, bleed the air from the master cylinder.

(a) Disconnect the brake tubes from the master cylinder. Use a container to catch the brake fluid.

(b) Slowly depress the brake pedal and hold it.

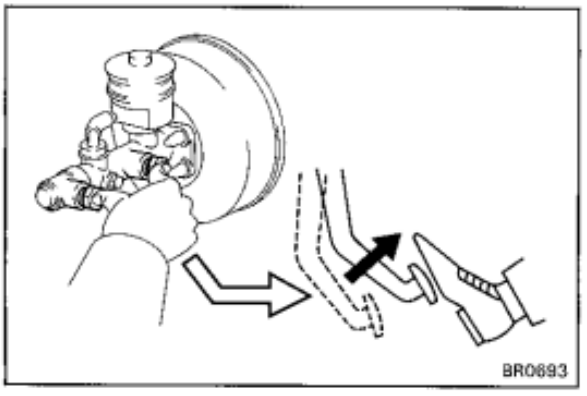

(c) Block off the outlet holes with your fingers, and release the brake pedal.

(d) Repeat (b) and (c) three or four times.

(e) Connect the brake tubes to the master cylinder.

3. CONNECT VINYL TUBE TO WHEEL CYLINDER BLEEDER PLUG

Insert other end of the tube in a half-full container of brake fluid.

HINT: Begin air bleeding from the wheel cylinder with the longest hydraulic line.

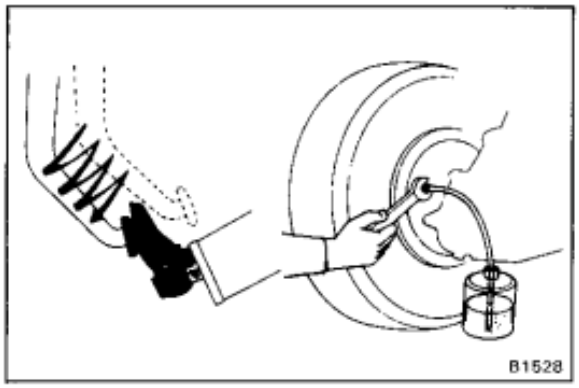

4. BLEED AIR FROM BRAKE LINE

(a) Slowly pump the brake pedal several times.

(b) While an assistant press on the pedal, loosen the bleeder plug until fluid starts to run out. Then close the bleeder plug.

(c) Repeat this procedure until there are no more air bubbles in the fluid.

Bleeder plug tightening torque:
110 kg-cm (8 ft-lb, 11 N·m)

5. REPEAT PROCEDURE FOR EACH WHEEL

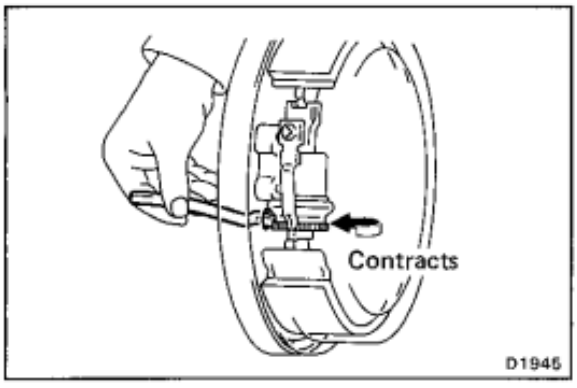

ADJUSTMENT OF BRAKE SHOE CLEARANCE
(Front Drum Brake Type)

ADJUST BRAKE SHOE CLEARANCE

(a) Jack up and support the vehicle.

(b) Remove the shoe adjusting hole plugs from the backing plate.

(c) Using a screwdriver, turn the adjusting nut until the wheel locks.

(d) Using a screwdriver, turn the adjusting nut until the wheel turns freely.

Standard number of notches to be backed off:
7 — 8 notches

(e) Repeat the steps (c) and (d) for the other wheel cylinder.

(f) Install the shoe adjusting hole plugs.

(g) Repeat the steps from (b) to (f) for another wheel.

(h) Check that the pedal reserve distance is correct. (See page BR-6)

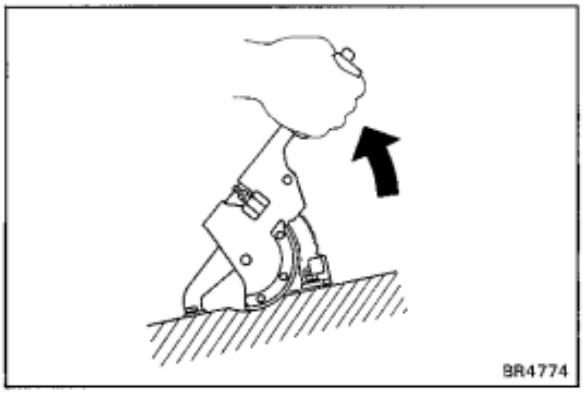

CHECK AND ADJUSTMENT OF PARKING BRAKE

1. CHECK THAT PARKING BRAKE LEVER TRAVEL IS CORRECT

Pull the parking brake lever all the way up, and count the number of clicks.

Parking brake lever travel at 20 kg (44.1 lb, 196 N):
7 — 9 clicks

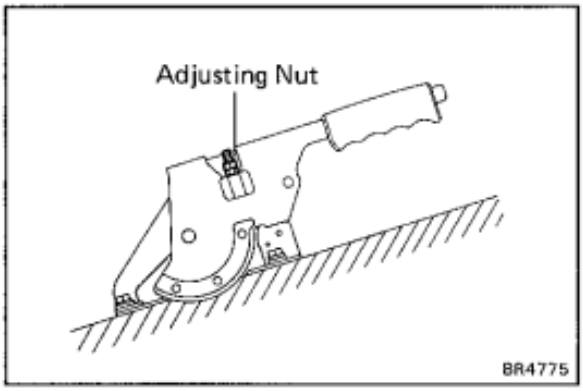

2. IF NECESSARY, ADJUST PARKING BRAKE

HINT: Before adjusting the parking brake lever travel, make sure that the rear brake shoe clearance has been adjusted.

(a) For shoe clearance adjustment, see step 9 on page BR-84 or see step 11 on page BR-101.

(b) Loosen the two adjusting nuts and adjust the parking brake cable until travel is correct.

MASTER CYLINDER

COMPONENTS

Ex. 2L-T Engine (RHD)

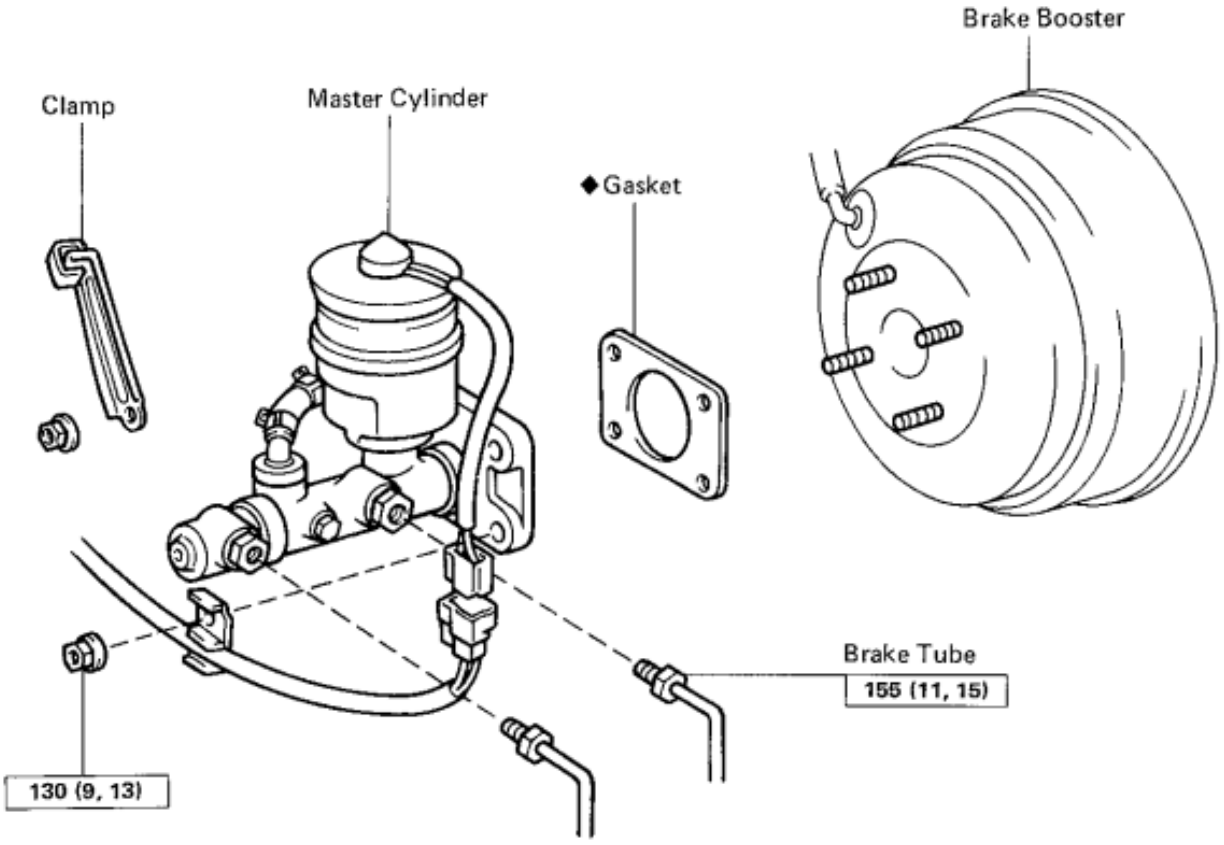

2L-T Engine (RHD)

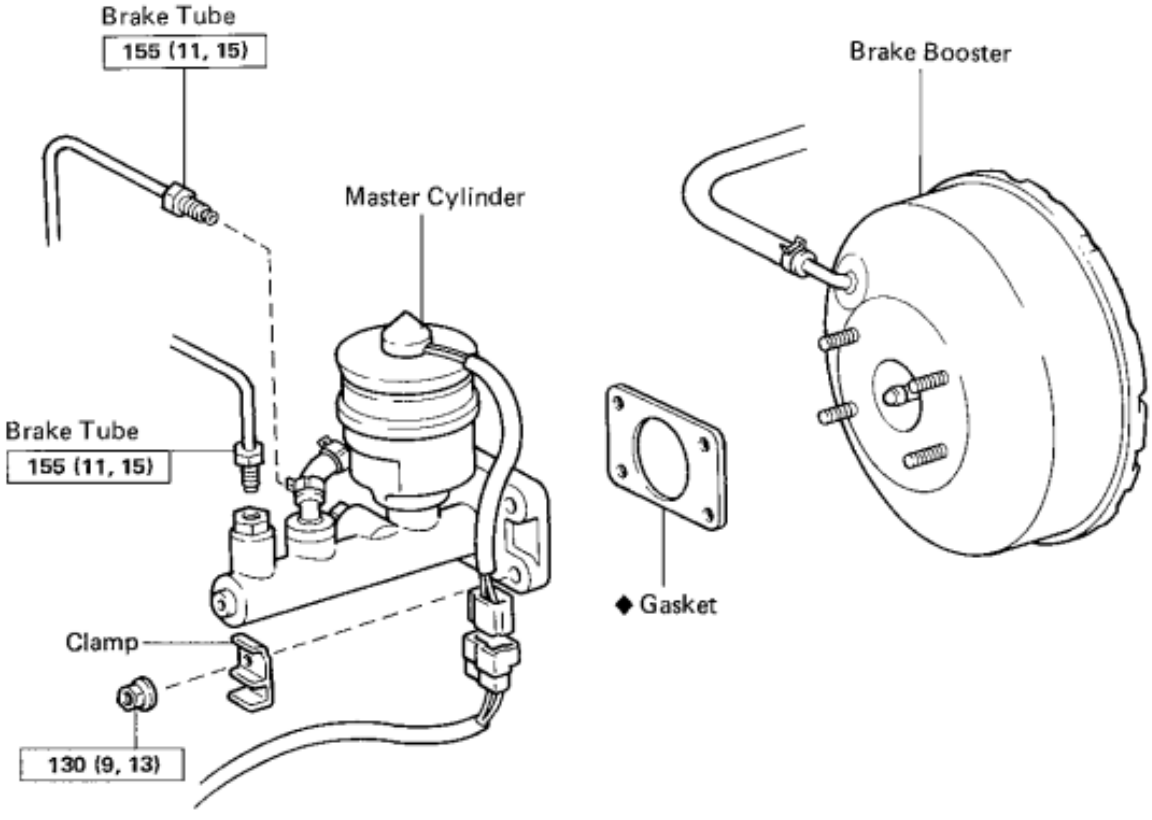

kg-cm (ft-lb, N·m) : Specified torque

◆ Non-reusable part

BR4799
BR4800

REMOVAL OF MASTER CYLINDER

1. **DISCONNECT LEVEL WARNING SWITCH CONNECTOR**

2. **TAKE OUT FLUID WITH SYRINGE**

   NOTICE: Do not let brake fluid remain on a painted surface. Wash it off immediately.

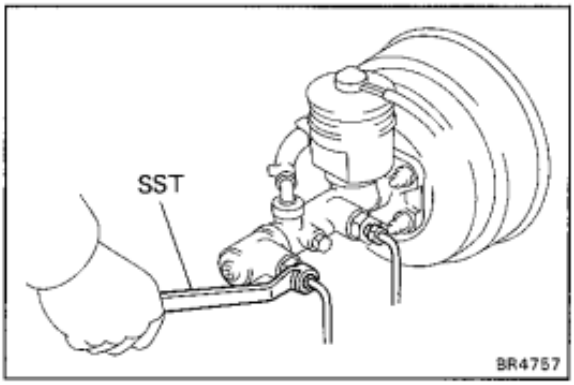

3. **DISCONNECT TWO BRAKE TUBES**

   Using SST, disconnect two brake tubes from the master cylinder.

   SST 09751-36011

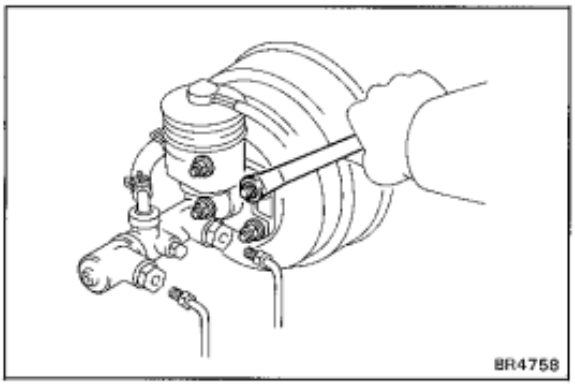

4. **REMOVE MASTER CYLINDER**

   (a) Remove the four nuts.

   (b) Remove the master cylinder, clamp and gasket from the brake booster.

DISASSEMBLY OF MASTER CYLINDER

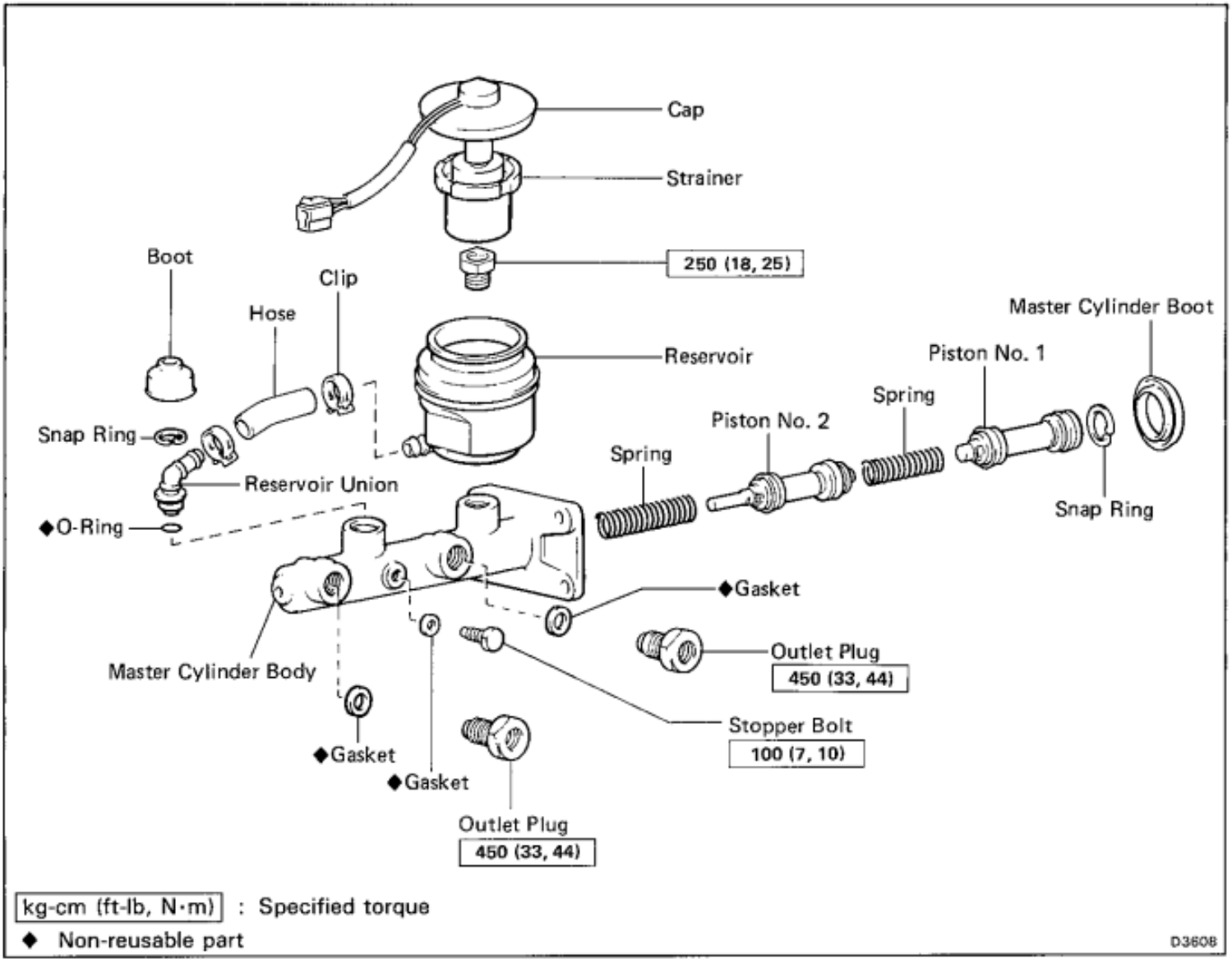

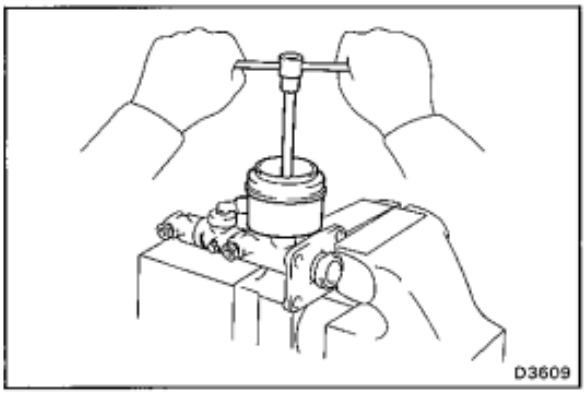

1. **PLACE CYLINDER IN VISE**

2. **REMOVE RESERVOIR AND HOSE**
   (a) Using pliers, slide the union side hose clip toward the reservoir.
   (b) Remove the cap and strainer.
   (c) Remove the set bolt from the reservoir.

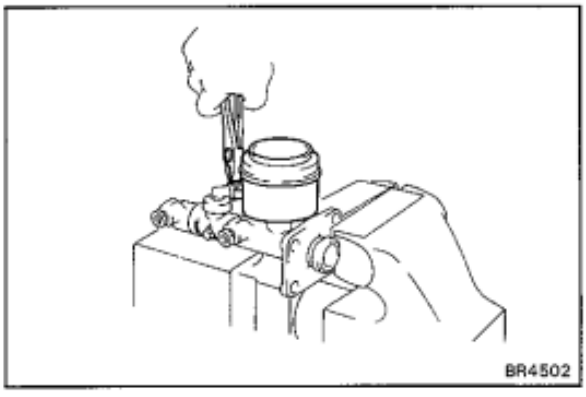

   (d) Remove the reservoir with the hose from the master cylinder.
   (e) If necessary, remove the hose from the reservoir.

3. **REMOVE BOOT**

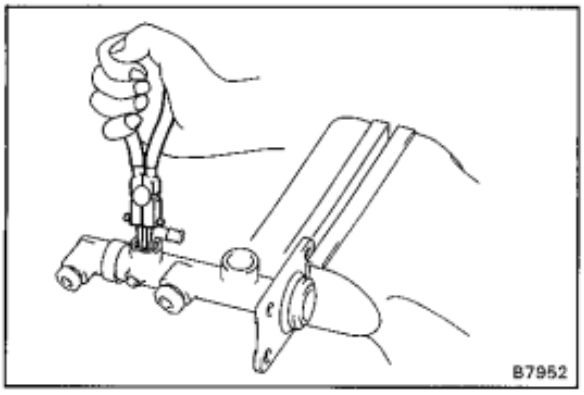

4. REMOVE RESERVOIR UNION

(a) Using snap ring pliers, remove the snap ring.

(b) Remove the reservoir union and O-ring.

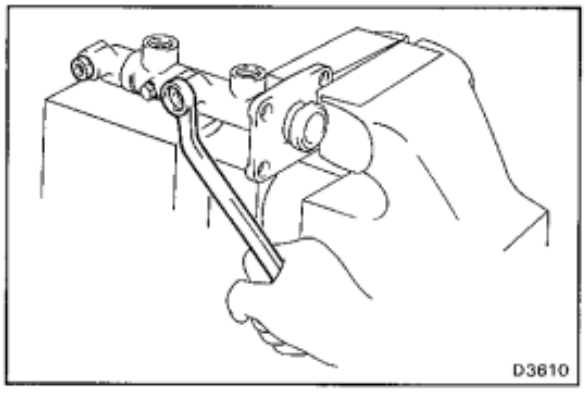

5. REMOVE OUTLET PLUGS

Remove the two outlet plugs and gaskets.

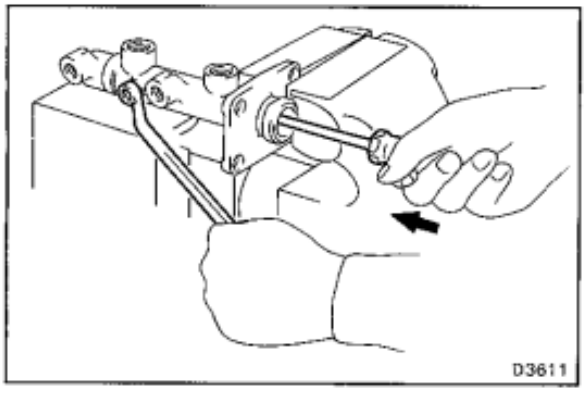

6. REMOVE PISTON STOPPER BOLT

Using a screwdriver, push the pistons in all the way, and remove the piston stopper bolt and gasket.

HINT: Tape the screwdriver tip before use.

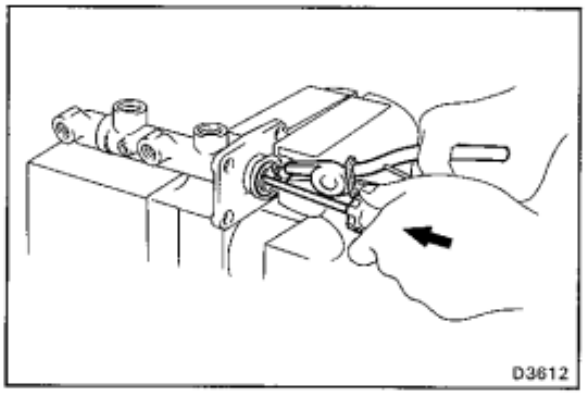

7. REMOVE TWO PISTONS AND SPRINGS

(a) Push in the piston with a screwdriver and remove the snap ring with snap ring pliers.

(b) Remove the No.1 piston and spring by hand, pulling straight out, not at an angle.

NOTICE: If pulled out at an angle, there is posibility of damaging the cylinder.

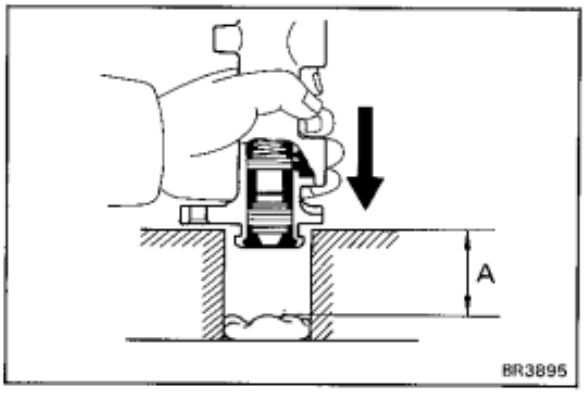

(c) Place a rag and two wooden block on the work table and lightly tap the cylinder flange against the block edges until the piston drops out of the cylinder.

HINT: Make sure the distance (A) from the rag to the top of the block is at least 100 mm (0.394 in.).

INSPECTION OF MASTER CYLINDER COMPONENTS

HINT: Clean the disassembled parts with compressed air.

1. **INSPECT CYLINDER BORE FOR RUST AND SCORING**

2. **INSPECT CYLINDER FOR WEAR OR DAMAGE**

   If necessary, clean or replace the cylinder.

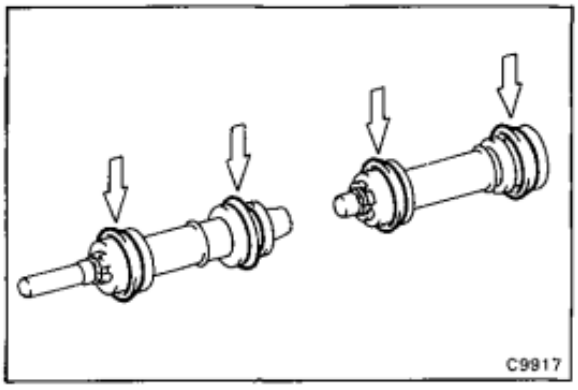

ASSEMBLY OF MASTER CYLINDER

(See page BR-12)

1. **APPLY LITHIUM SOAP BASE GLYCOL GREASE TO RUBBER PARTS INDICATED BY ARROWS**

2. **INSTALL TWO SPRING AND PISTONS**

   NOTICE: Be careful not to damage the rubber lips on the pistons.

   (a) Insert two springs and pistons straight in, not at an angle.

   NOTICE: If inserted at an angle, there is posibility of damaging the cylinder bore.

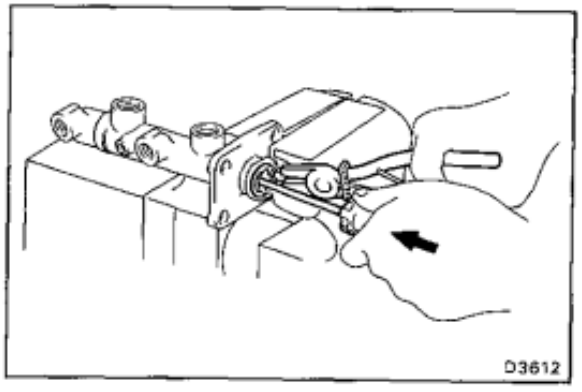

   (b) Push in the piston with a screwdriver and install the snap ring with snap ring pliers.

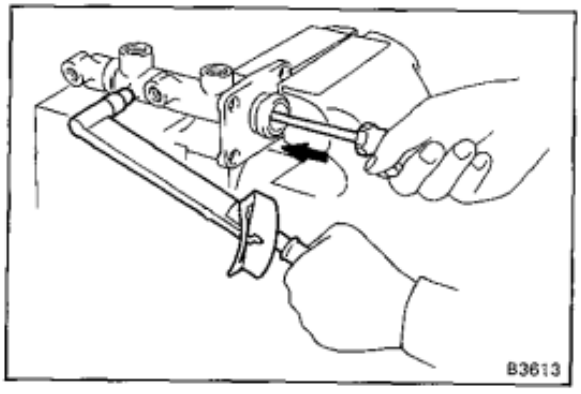

3. **INSTALL PISTON STOPPER BOLT AND NEW GASKET**

   Using a screwdriver, push the pistons in all the way and install the piston stopper bolt over a new gasket.

   Torque the bolt.

   Torque: 100 kg-cm (7 ft-lb, 10 N·m)

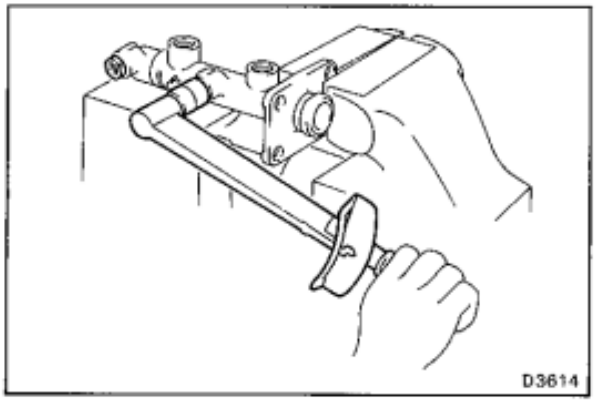

4. INSTALL OUTLET PLUGS

Install the two outlet plugs over a new gasket.

Torque the plugs.

Torque: 450 kg-cm (33 ft-lb, 44 N·m)

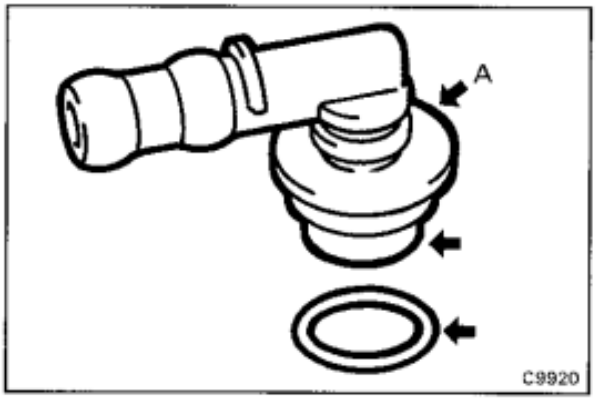

5. INSTALL RESERVOIR UNION

(a) Apply lithium soap base glycol grease to the reservoir union.

(b) Pack the lithium soap base glycol grease on the union (A).

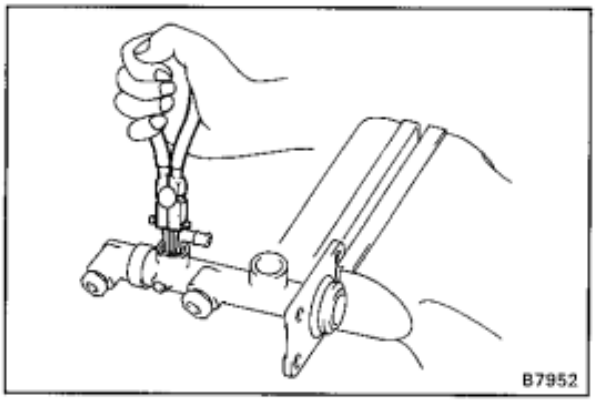

(c) Install the union to the master cylinder through the new O-ring.

(d) Using snap ring pliers, install the snap ring.

(e) Install the bolt.

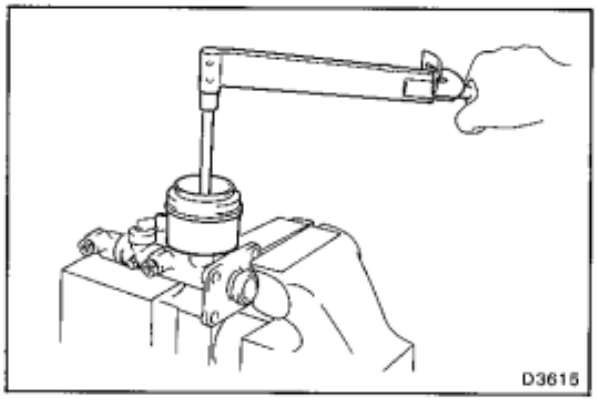

6. INSTALL RESERVOIR AND HOSE

(a) Connect the hose to union and reservoir.

(b) Install the reservoir on the master cylinder with the "MAX" mark facing toward the front.

(c) Install the gasket and torque the bolt.

Torque: 250 kg-cm (18 ft-lb, 25 N·m)

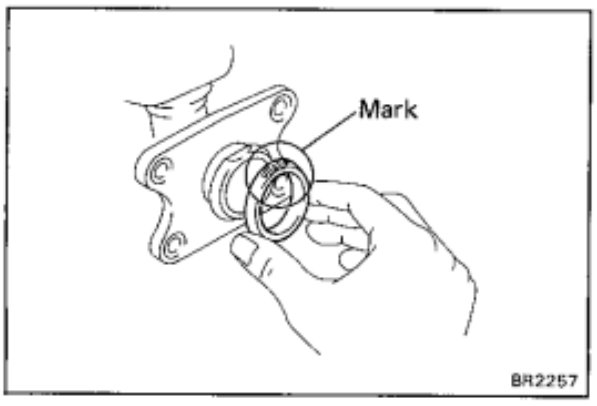

7. CLEAN OUT GROOVE ON LOWER INSTALLATION SURFACE OF MASTER CYLINDER

8. CONFIRM THAT " UP " MARK ON MASTER CYLINDER BOOT IS IN CORRECT POSITION

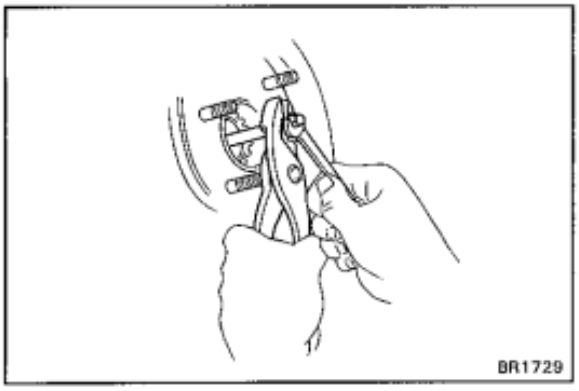

INSTALLATION OF MASTER CYLINDER

1. **ADJUST LENGTH OF BRAKE BOOSTER PUSH ROD BEFORE INSTALLING MASTER CYLINDER**
(See page BR-47)

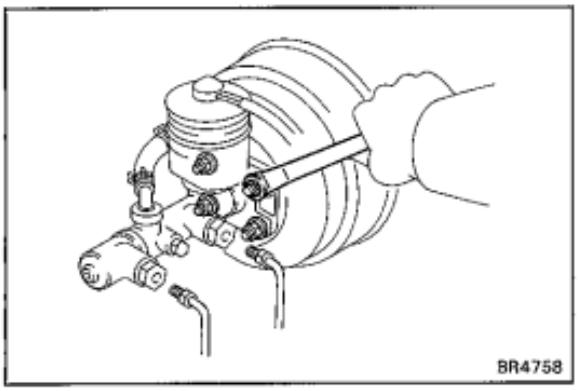

2. **INSTALL MASTER CYLINDER**

Install the master cylinder and clamp on the brake booster with the four nuts over a new gasket.

Torque: 130 kg-cm (9 ft-lb, 13 N·m)

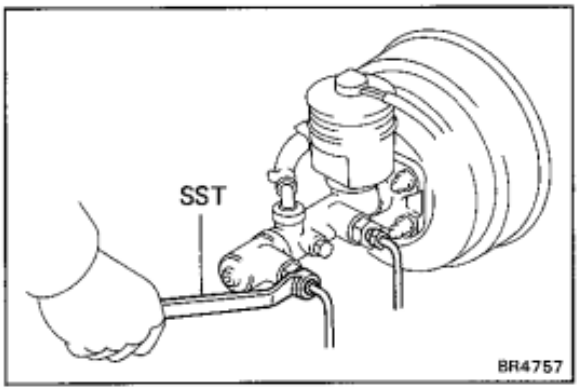

3. **CONNECT TWO BRAKE TUBES**

(a) Finger tighten the union nuts.

(b) Using SST, torque the union nuts.

SST 09751-36011

Torque: 155 kg-cm (11 ft-lb, 15 N·m)

4. **CONNECT LEVEL WARNING SWITCH CONNECTOR**

5. **FILL BRAKE RESERVOIR WITH BRAKE FLUID AND BLEED BRAKE SYSTEM**
(See page BR-7)

6. **CHECK FOR FLUID LEAKAGE**

7. **CHECK AND ADJUST BRAKE PEDAL**

BRAKE BOOSTER

REMOVAL OF BRAKE BOOSTER

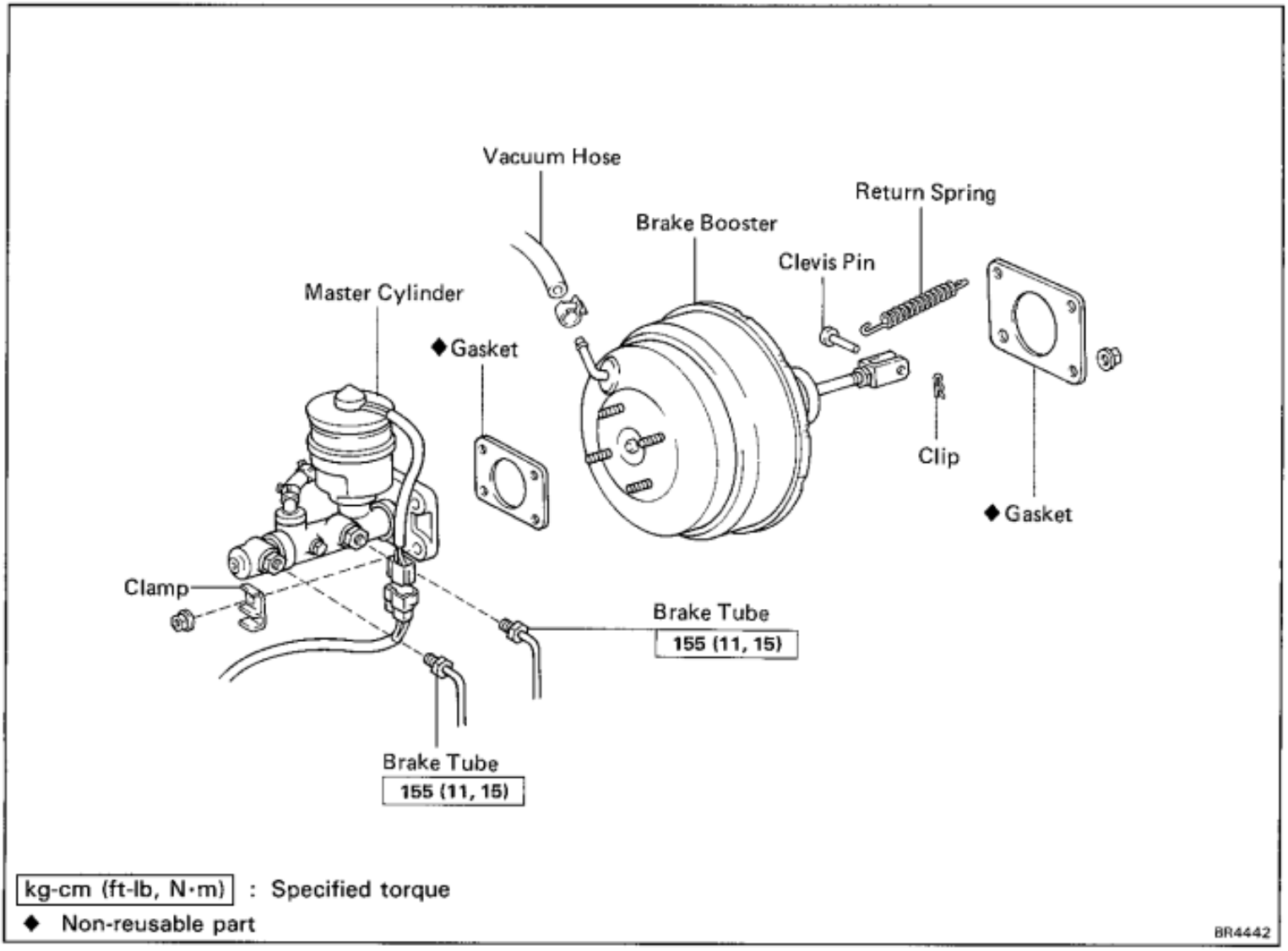

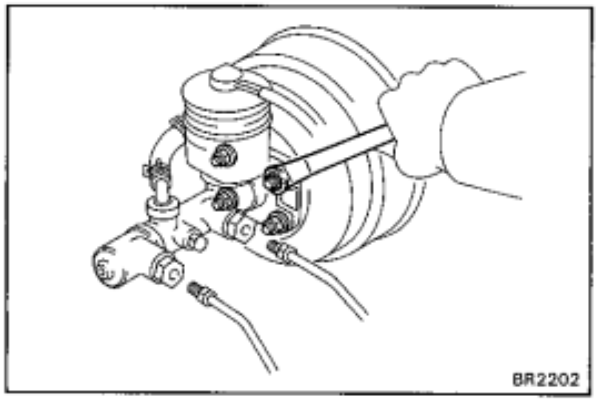

1. **REMOVE MASTER CYLINDER**
   (See page BR-10)

2. **DISCONNECT VACUUM HOSE FROM BRAKE BOOSTER**

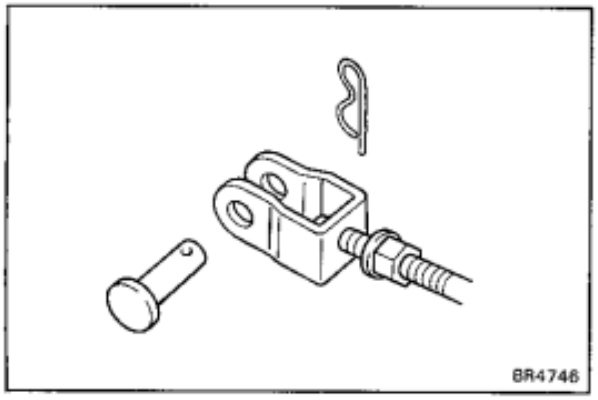

3. **DISCONNECT BRAKE PEDAL FROM CLEVIS**
   (a) Remove the return spring.
   (b) Remove the clip.
   (c) Loosen the lock nut.
   (d) Remove the clevis pin.

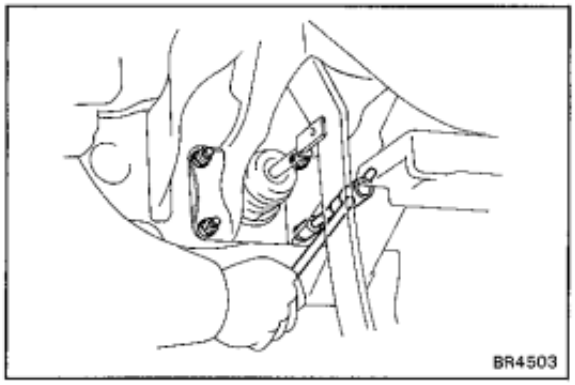

4. REMOVE BRAKE BOOSTER

(a) Remove the four nuts.

(b) Remove the clevis.

(c) Pull out the brake booster to underside.

Brake Booster

AISIN Type Single Booster

COMPONENTS

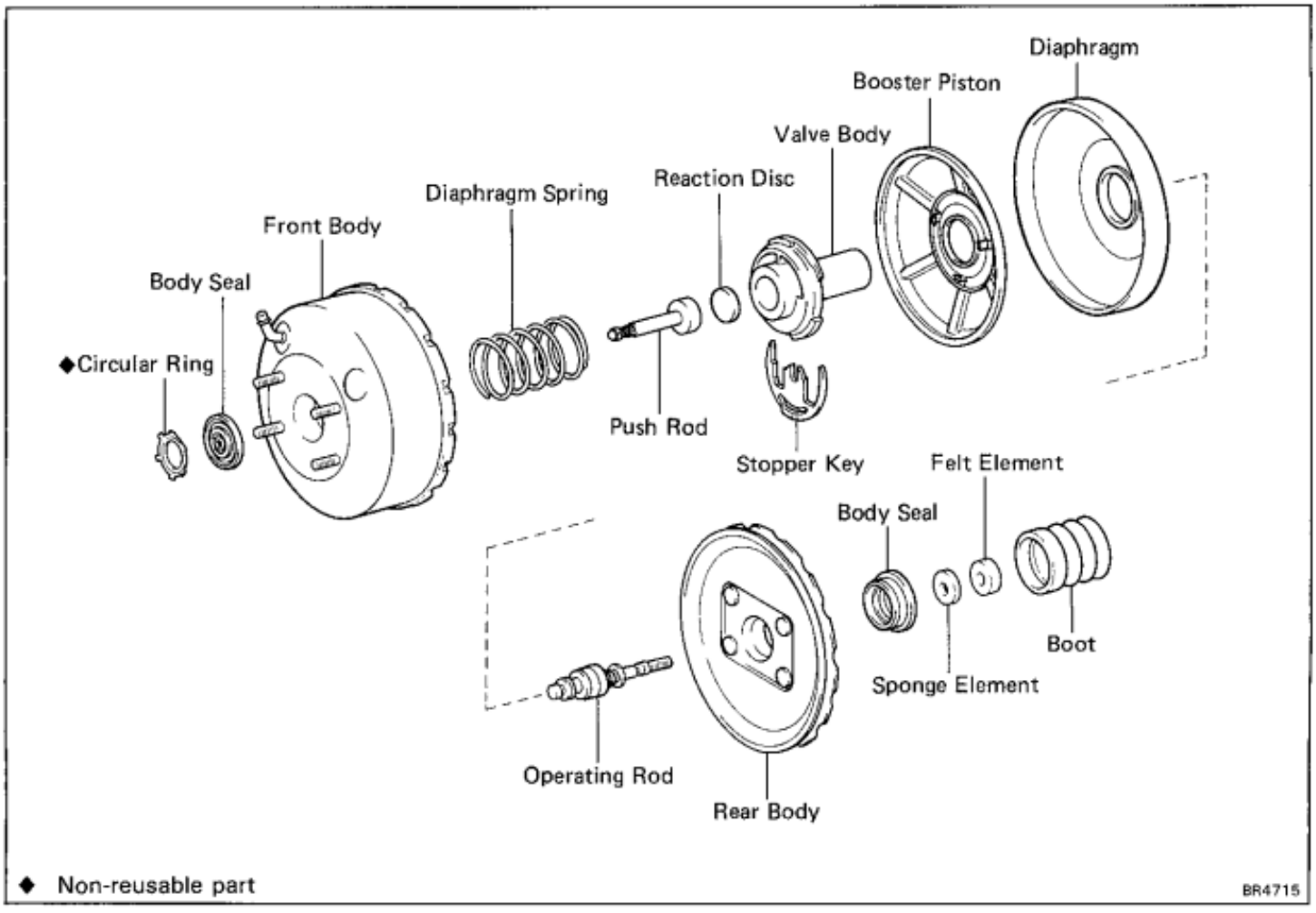

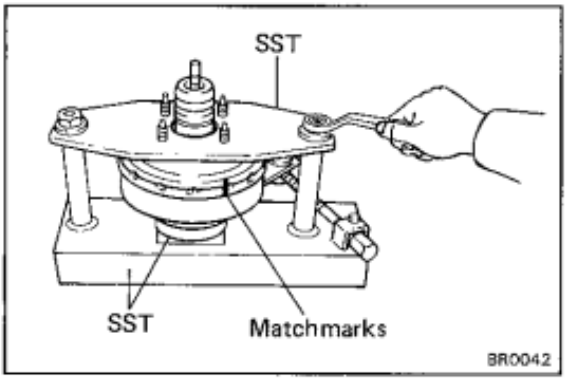

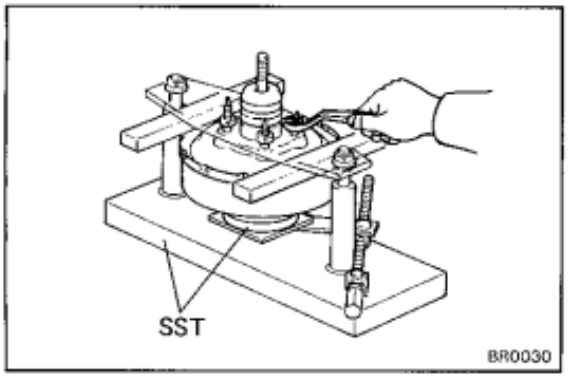

DISASSEMBLY OF BRAKE BOOSTER

1. SEPARATE FRONT AND REAR BODIES

(a) Put matchmarks on the front and rear bodies.

(b) Set the booster in SST.

SST 09753-00013 and 09753-40010

NOTICE: Be careful not to tighten the two nuts of SST too tight.

(c) Turn the front body clockwise until the front and rear bodies separate.

(d) Loosen the upper left and right nuts of SST, and insert pieces of wood between the front body and upper plate.

NOTICE: Be careful that the pieces of wood do not contact the rear body.

(e) Evenly tighten down the four booster mounting nuts to separate the front and rear bodies.

(f) Remove the diaphragm spring and push rod.

2. REMOVE BOOT FROM REAR BODY

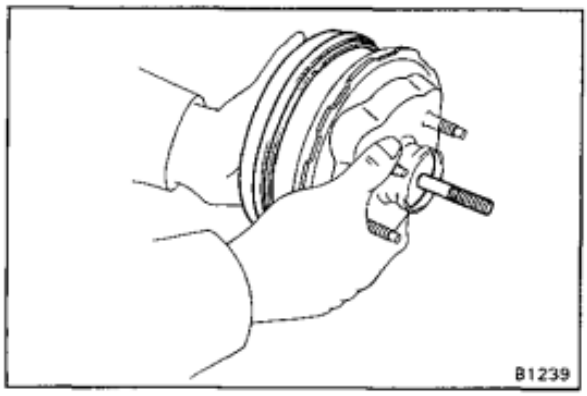

3. **REMOVE DIAPHRAGM ASSEMBLY FROM REAR BODY**

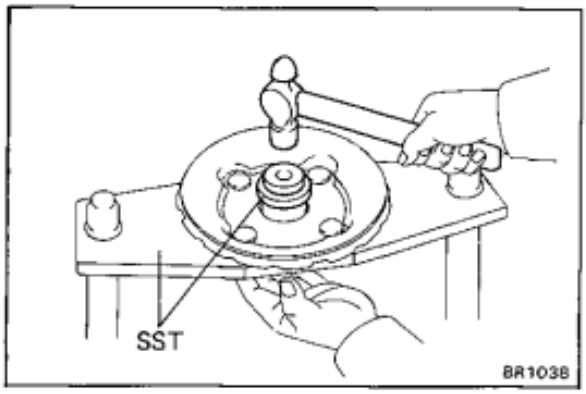

4. **REMOVE BODY SEAL FROM REAR BODY**

Using SST, remove the seal.

SST 09753-00013 and 09753-30020

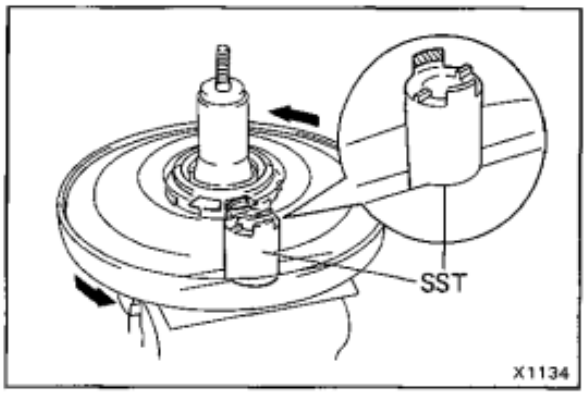

5. **REMOVE VALVE BODY AND DIAPHRAGM FROM BOOSTER PISTON**

(a) Mount SST in vise.

SST 09736-27010

(b) Put the diaphragm assembly on SST and turn it to separate the valve body and booster piston.

(c) Remove the diaphragm from the booster piston.

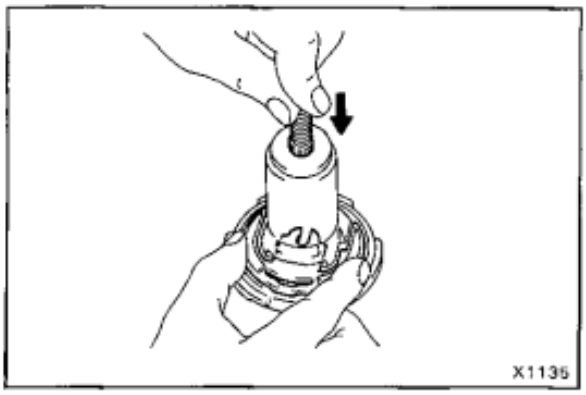

6. **REMOVE OPERATING ROD FROM VALVE BODY**

(a) Push the operating rod in the valve body and remove the stopper key.

(b) Pull out the operating rod with the two elements.

7. **REMOVE REACTION DISC FROM VALVE BODY**

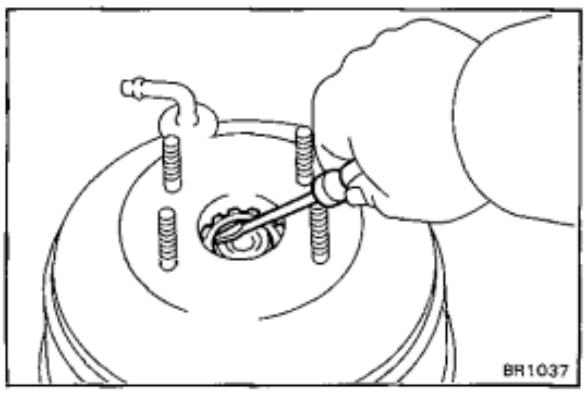

8. **REMOVE BODY SEAL FROM FRONT BODY**

Using a screwdriver, pry out the circular ring, and remove the seal.

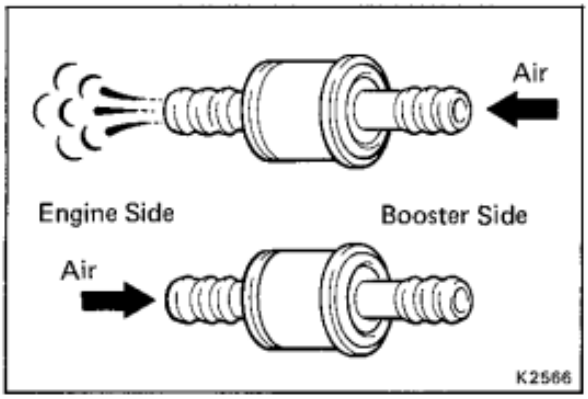

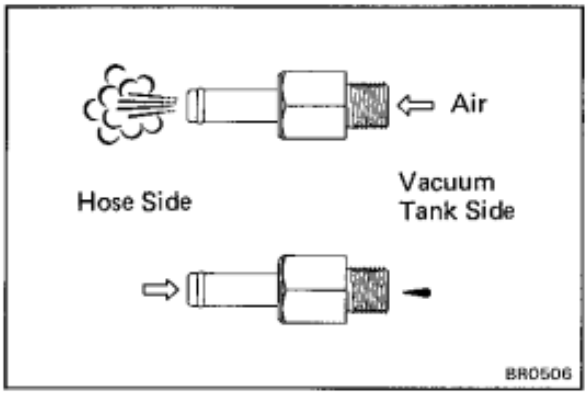

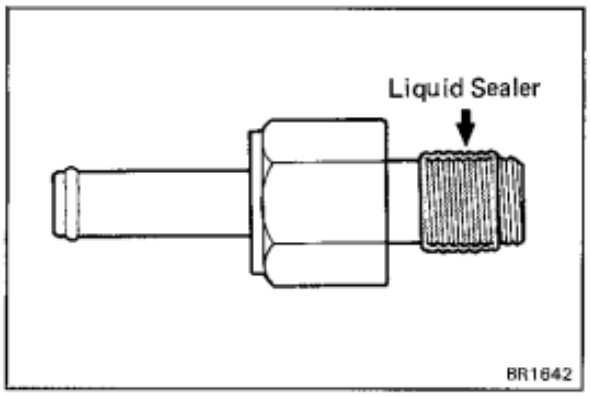

INSPECTION OF BRAKE BOOSTER COMPONENTS

INSPECT CHECK VALVE OPERATION

(Gasoline Engine)

(a) Remove the check valve.

(b) Check that air flows from the booster side to the engine side.

(c) Check that air does not flow from the engine side to the booster side.

If necessary, replace the check valve.

(d) Install the check valve.

(Diesel Engine)

(a) Remove the check valve from the vacuum line.

(b) Check that air flows from the vacuum tank side to the hose side.

(c) Check that air dose not flow from the hose side to the vacuum tank side.

If necessary, replace the check valve.

(d) Apply liquid sealer to the check valve as shown.

Sealant: Part No. 08826-00080 or equivalent

(e) Install the check valve.

Torque: 300 kg-cm (22 ft-lb, 29 N·m)

(f) Install the vacuum hose to the check valve with hose clamp.

ASSEMBLY OF BRAKE BOOSTER

(See page BR-19)

1. APPLY SILICONE GREASE TO PARTS SHOWN BELOW

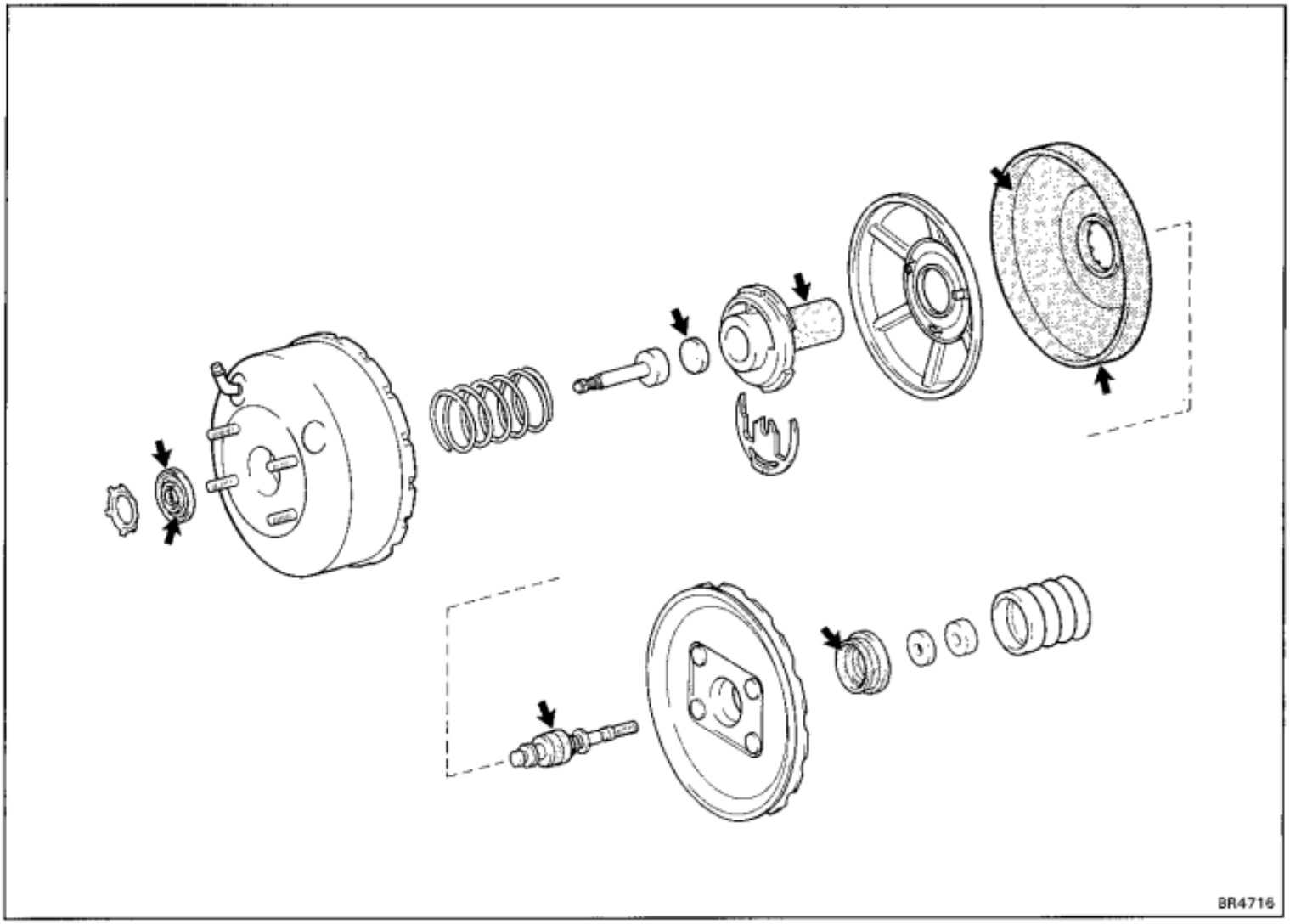

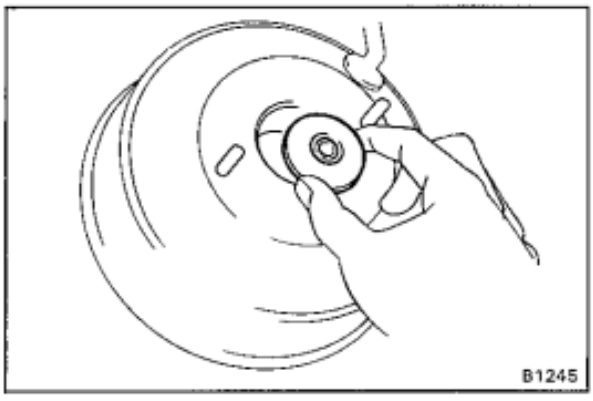

2. INSTALL BODY SEAL TO FRONT BODY
   (a) Place the body seal in position.
   (b) Secure the body seal with the circular ring.

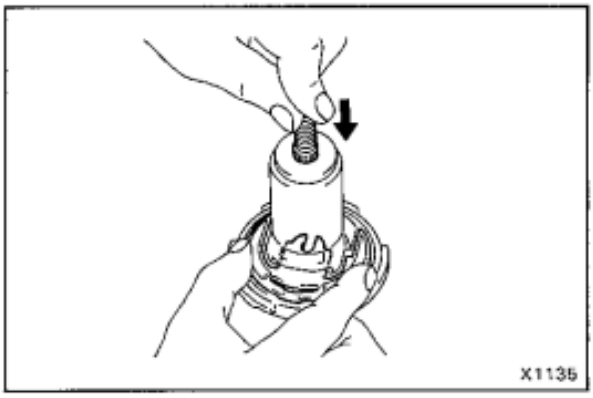

3. INSTALL OPERATION ROD TO VALVE BODY
   (a) Insert the operation rod in the valve body.
   (b) Push the operation rod in the valve body and install the stopper key.

   HINT: Install the stopper key as the stopper rubber on the key facing upward.

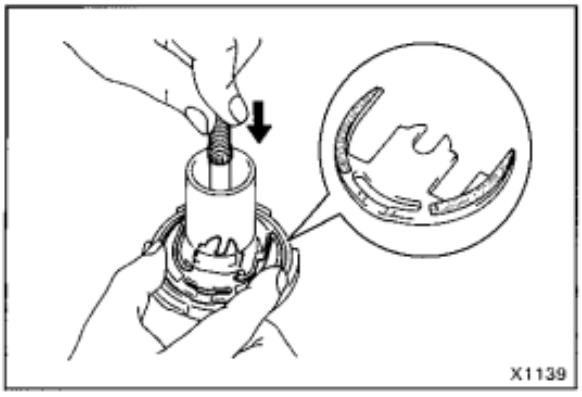

(c) Pull the operation rod and confirm that the stopper key is working.

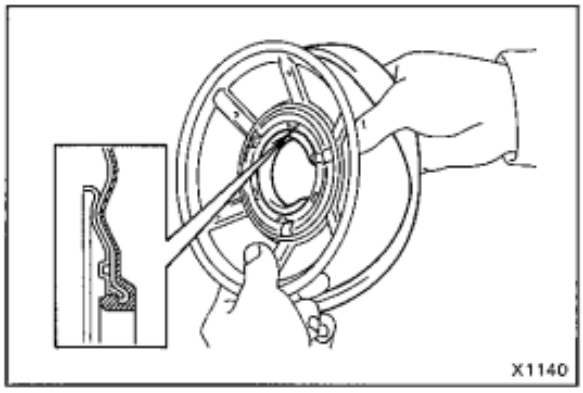

4. INSTALL VALVE BODY AND DIAPHRAGM TO BOOSTER PISTON

(a) Install the diaphragm to the booster piston as shown.

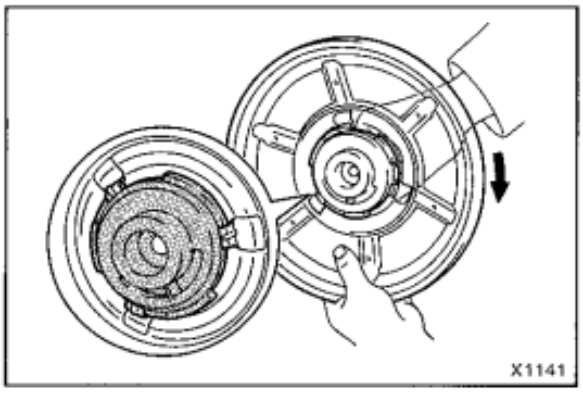

(b) Insert the valve body to the booster piston and turn the valve body as shown.

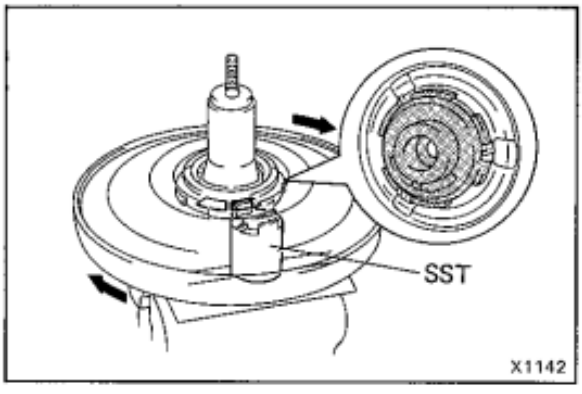

(c) Tape the protrusion of SST and mount it in vise.

SST 09753-30011

(d) Put the assembly on SST and turn the booster piston clockwise until it locks.

HINT: Turn the booster piston as the piston keeps horizontal condition.

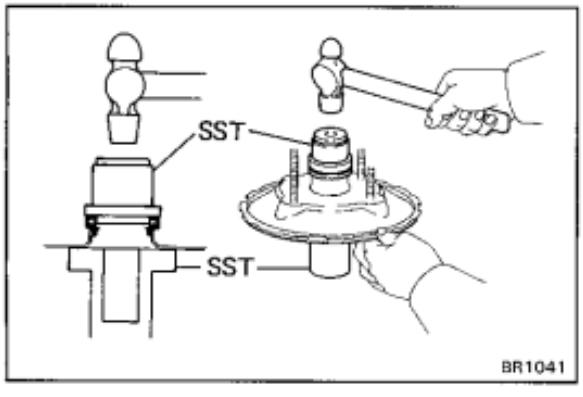

5. INSTALL BODY SEAL TO REAR BODY

Using SST, drive in the seal.

SST 09309-36010 and 09753-30020

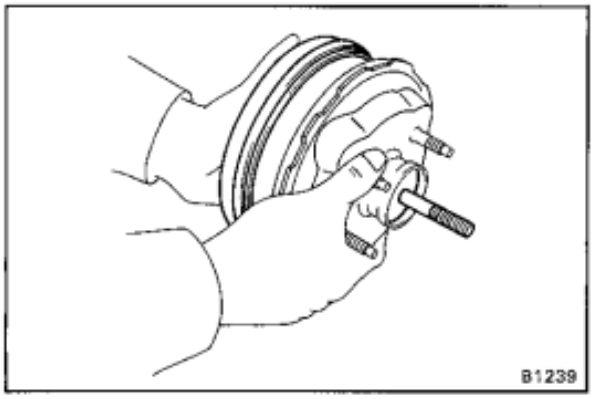

6. **INSTALL DIAPHRAGM ASSEMBLY TO REAR BODY**

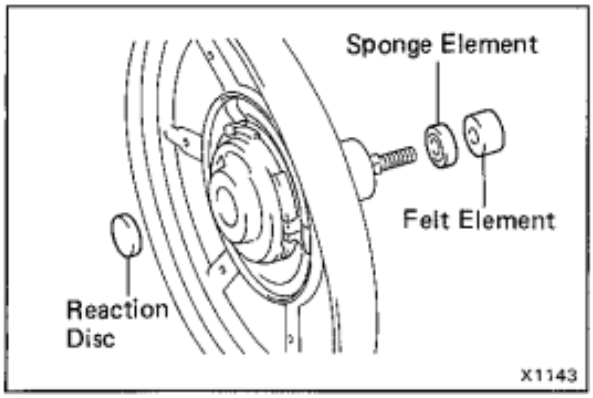

7. **INSTALL FOLLOWING PARTS TO REAR BODY**
   (a) Felt element
   (b) Sponge element
   (c) Boot

8. **INSTALL REACTION DISC TO VALVE BODY**

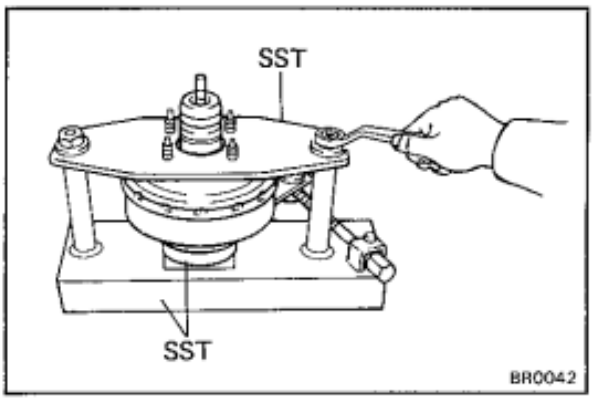

9. **ASSEMBLE FRONT AND REAR BODIES**
   (a) Place the spring and push rod in the front body.
   (b) Using SST, compress the spring between the front and rear bodies.

SST 09753-00013 and 09753-40010

NOTICE: Be careful not to tighten the two nuts of SST too tight.

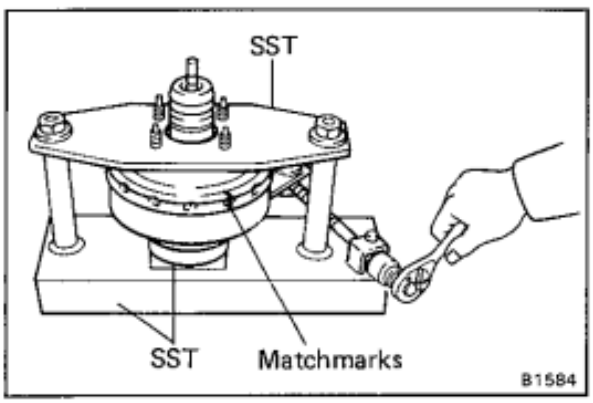

   (c) Assemble the front and rear bodies by turning the front body counterclockwise until the matchmarks match.

HINT: If the front body is too tight to be turned, apply more silicone grease on the diaphragm edge that contacts the front and rear bodies.

AISIN Type Tandem Booster

COMPONENTS

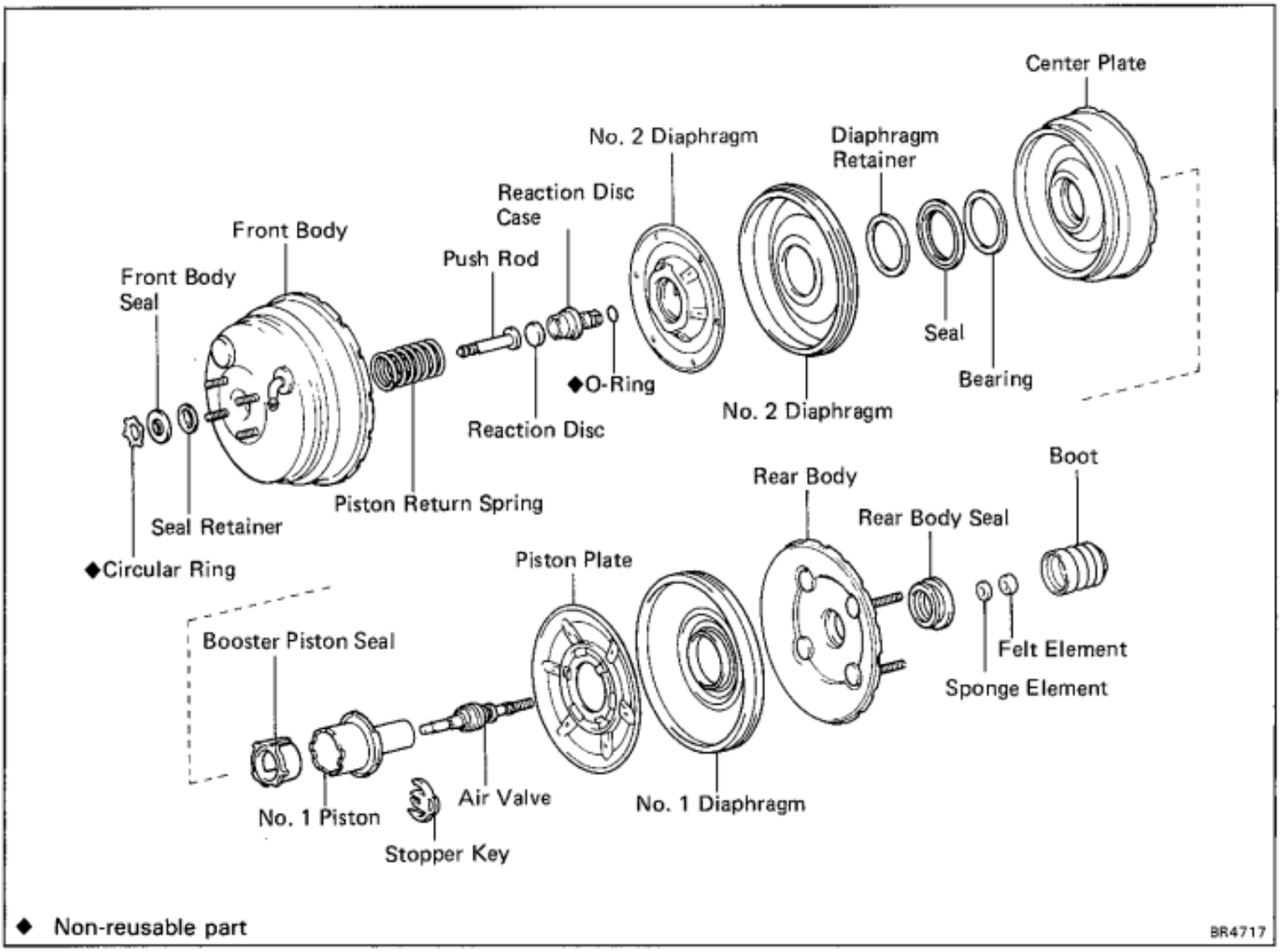

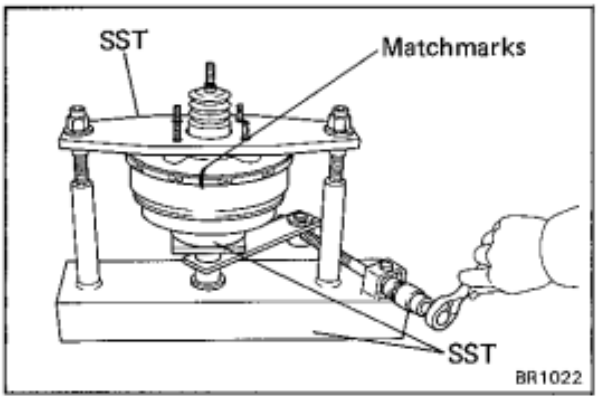

DISASSEMBLY OF BRAKE BOOSTER

1. **REMOVE CLEVIS AND LOCK NUT**

2. **SEPARATE FRONT AND REAR BODIES**

   (a) Set the booster in SST.

   SST 09753-00013 and 09753-40010

   (b) Put matchmarks on the front and rear bodies.

   NOTICE: Be careful not to tighten the two nuts of SST too tight.

   (c) Turn the front body clockwise to separate the front and rear bodies.

   (d) Remove the rear body, push rod and piston return spring from the front body.

3. **REMOVE BOOT FROM REAR BODY**

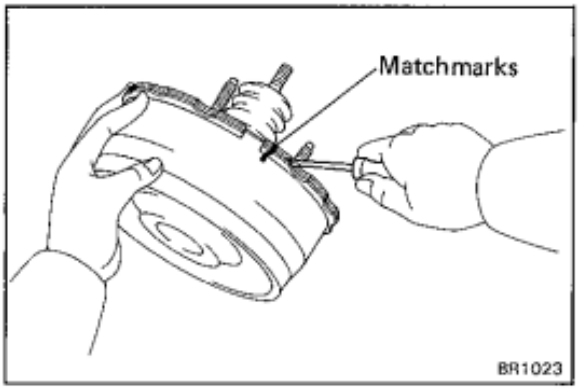

4. REMOVE REAR BODY FROM CENTER PLATE ASSEMBLY

Before separating, put matchmarks on the rear body and center plate assembly.

Using a screwdriver, separate and remove the rear body from center plate assembly.

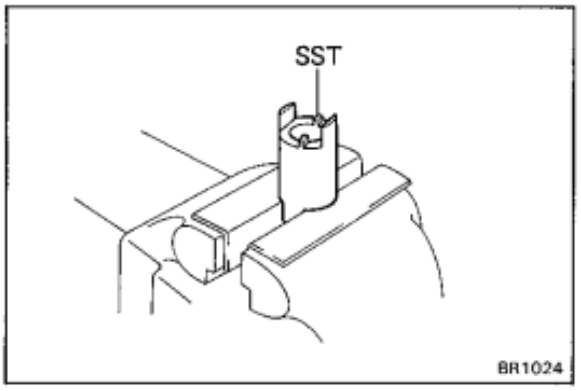

5. REMOVE NO.1 DIAPHRAGM AND PISTON PLATE FROM CENTER PLATE ASSEMBLY

(a) Mount SST in vise.

SST 09753-30011

(b) Set the center plate assembly on SST.

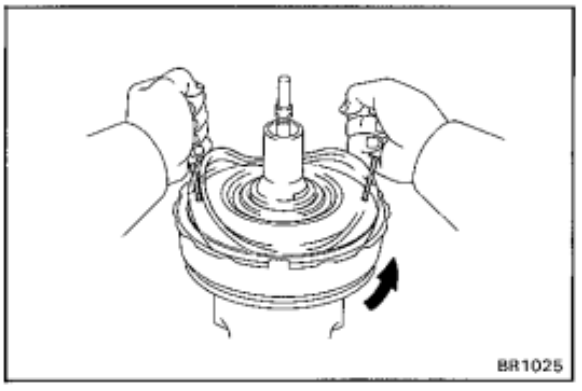

(c) Fold the No.1 diaphragm upward, insert two pin punches into the holes on the piston plate.

(d) Turn the piston plate counterclockwise until the piston plate and No.1 diaphragm separate from the center plate assembly, and remove them.

(e) Separate the No.1 diaphragm from the piston plate.

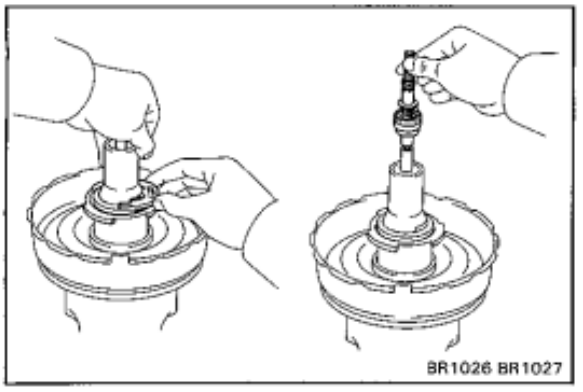

6. REMOVE STOPPER KEY AND AIR VALVE

(a) Push in the valve operating rod and pull out the valve stopper key.

(b) Remove the air valve from the No.1 piston with a sponge and felt element.

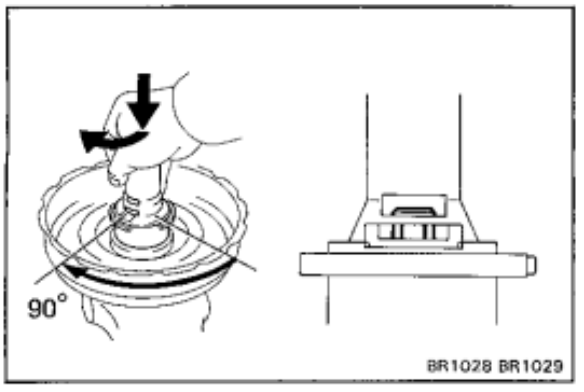

7. DISASSEMBLE CENTER PLATE ASSEMBLY

(a) While pushing in the No.1 piston, turn it a quarter of one turn and check that the sight in the stopper key hole is as shown in the illustration.

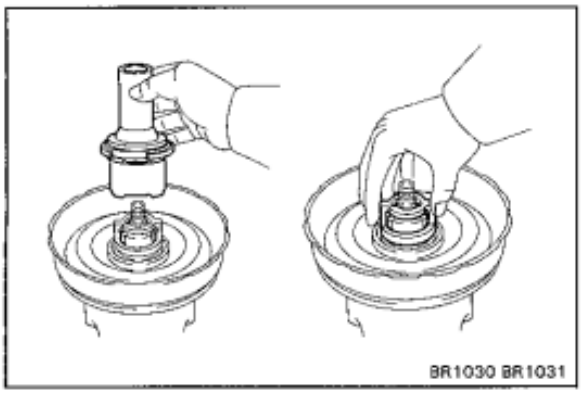
BR1030 BR1031

(b) Remove the No.1 piston from the No.2 piston.

(c) Remove the booster piston seal from the No.1 piston.

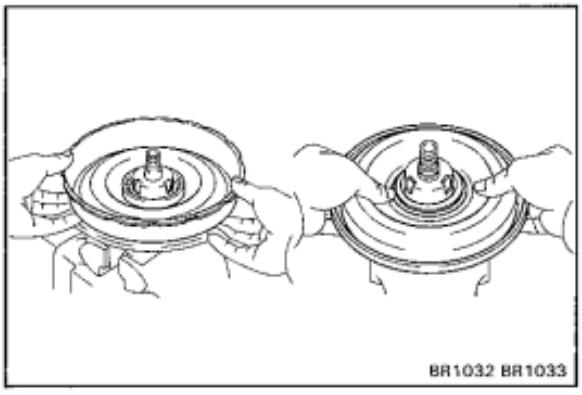
BR1032 BR1033

(d) Remove the center plate.

(e) Remove the No.2 diaphragm and No.2 piston.

(f) Remove the No.2 diaphragm from the No.2 piston.

(g) Remove the diaphragm retainer from the No.2 diaphragm.

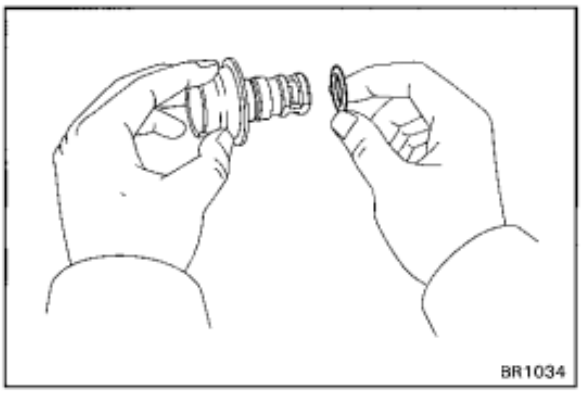
BR1034

8. REMOVE REACTION DISC AND O-RING

(a) Push out the reaction disc from the reaction disc case.

(b) Remove the O-ring from the reaction disc case.

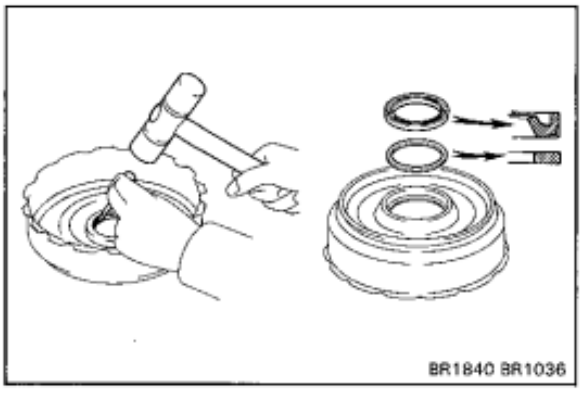
BR1840 BR1036

9. REMOVE CENTER PLATE BEARING AND SEAL

Using a screwdriver, tap out the bearing and seal.

NOTICE: Be careful not to scratch the center plate.

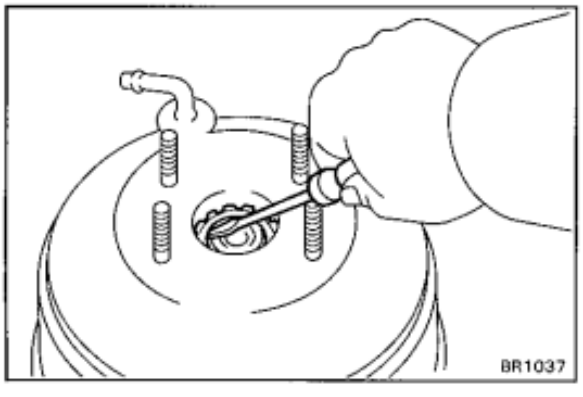
BR1037

10. REMOVE BODY SEAL FROM FRONT BODY

Using a screwdriver, pry out the circular ring, and remove the front body seal. Then remove the seal retainer from the seal.

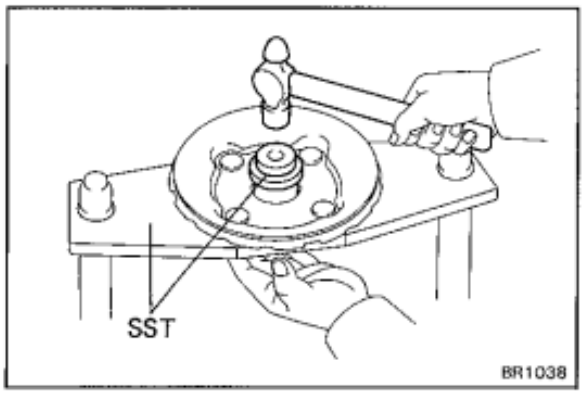

11. REMOVE BODY SEAL FROM REAR BODY

Using SST, tap out the body seal from the rear body.

SST 09753-00013 and 09753-30020

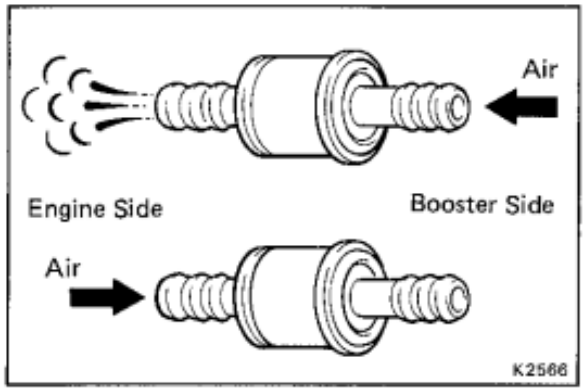

INSPECTION OF BRAKE BOOSTER COMPONENTS

INSPECT CHECK VALVE OPERATION

(a) Remove the check valve.

(b) Check that air flows the booster side to the engine side.

(c) Check that air does not flow from the engine side to the booster side.

If necessary, replace the check valve.

(d) Install the check valve.

ASSEMBLY OF BRAKE BOOSTER

(See page BR-25)

1. APPLY SILICONE GREASE TO PARTS SHOWN BELOW

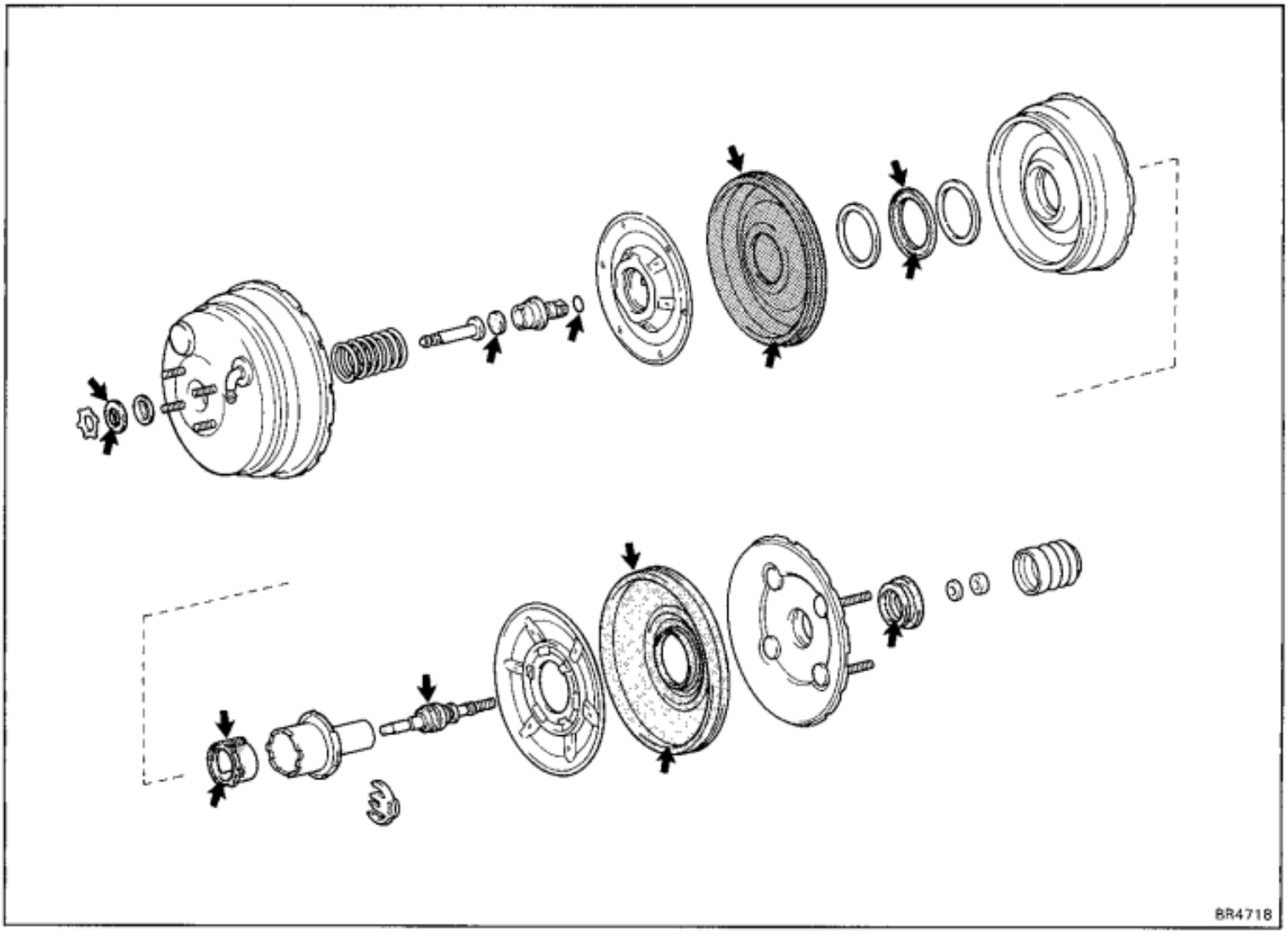

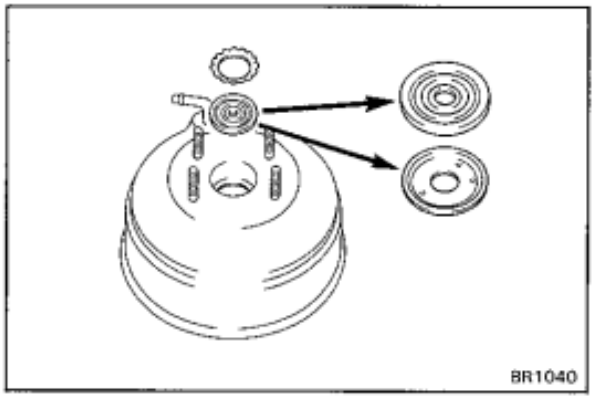

2. INSTALL BODY SEAL TO FRONT BODY
   (a) Install the seal retainer to the body seal.
   (b) Install the body seal to the front body.
   (c) Secure the body seal with the circular ring.

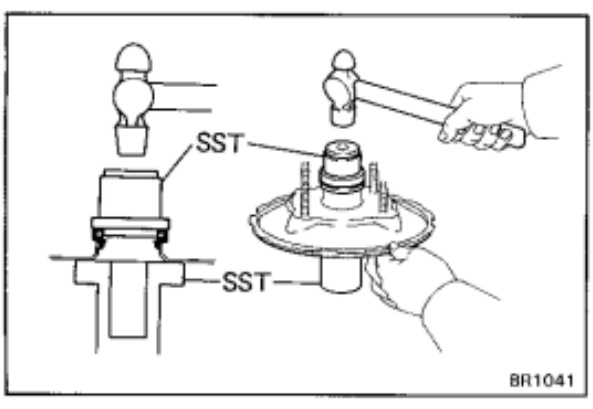

3. INSTALL BODY SEAL TO REAR BODY
   (a) Apply silicone grease to the rubber portion of the body seal.
   (b) Using SST, install the body seal.

   SST 09309-36010 and 09753-30020

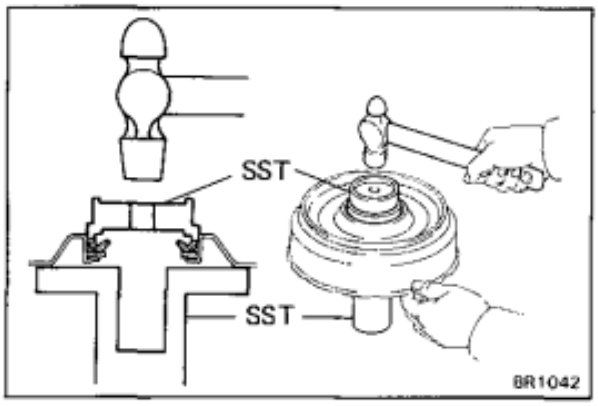

4. INSTALL CENTER PLATE BEARING AND SEAL

(a) Apply silicone grease to the seal.

(b) Using SST, install the bearing and seal in position.

SST 09309-36010 and 09608-10010

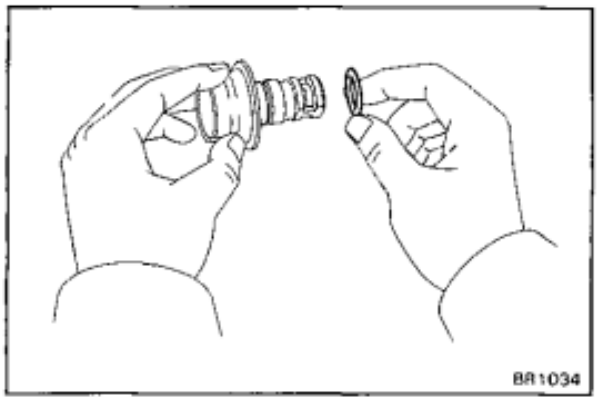

5. INSTALL O-RING TO REACTION DISC CASE

(a) Install new O-ring to the reaction disc case.

(b) Apply silicone grease to the O-ring portion.

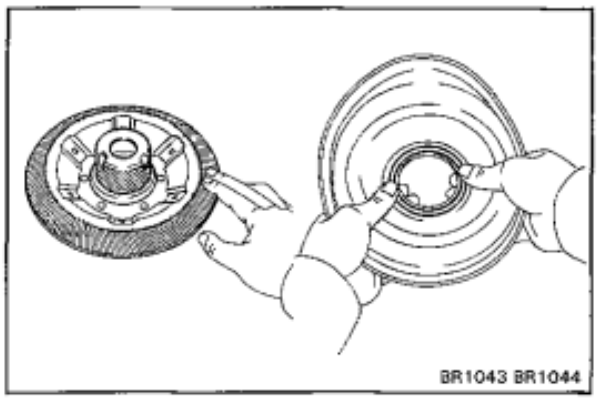

6. ASSEMBLE CENTER PLATE ASSEMBLY

(a) Apply silicone grease to the No.2 piston as shown.

(b) Install diaphragm retainer to the No.2 diaphragm.

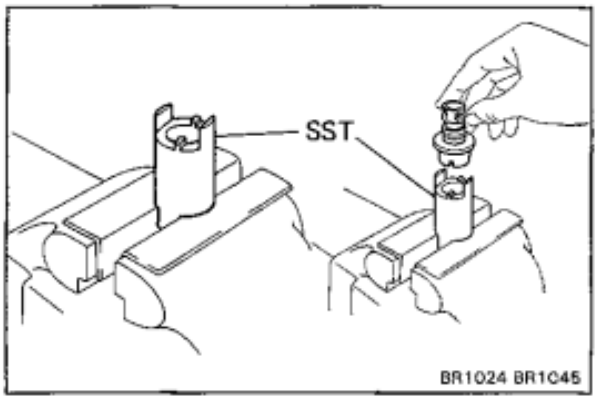

(c) Mount SST in vise.

SST 09753-30011

(d) Put the reaction disc case on SST.

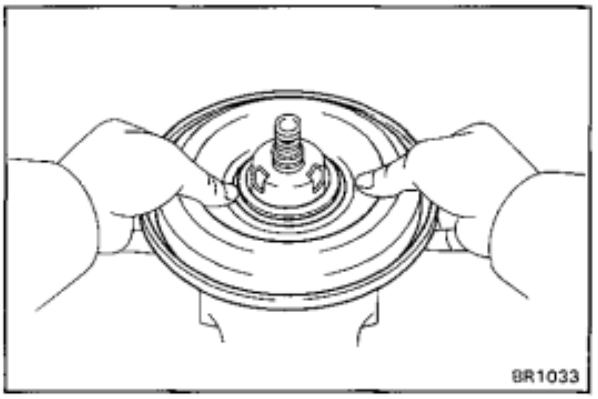

(e) Install the No.2 piston to the case, and install the No.2 diaphragm.

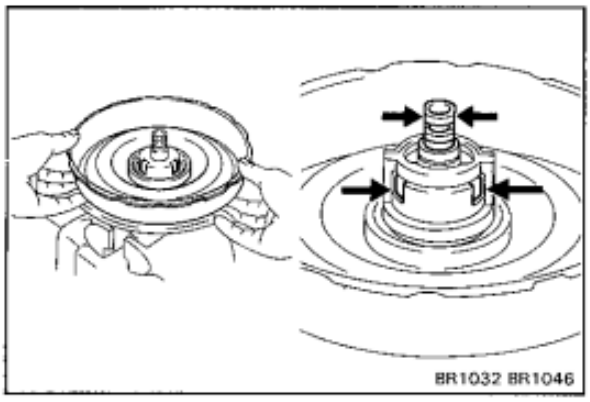

(f) Install the center plate and hook the No.2 diaphragm to the center plate outside ditch.

(g) Check that the positions of the reaction disc case and No.2 piston are as shown.

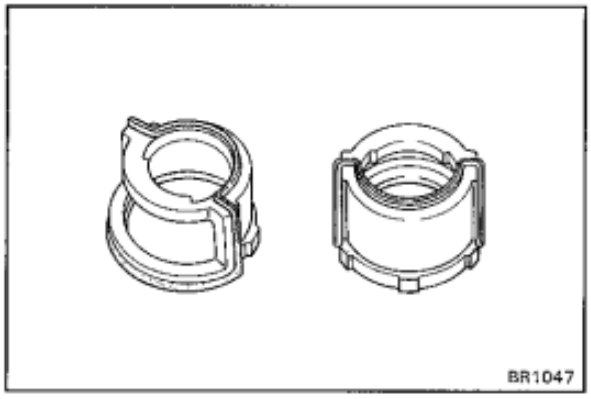

(h) Apply silicone grease to the booster piston seal as shown.

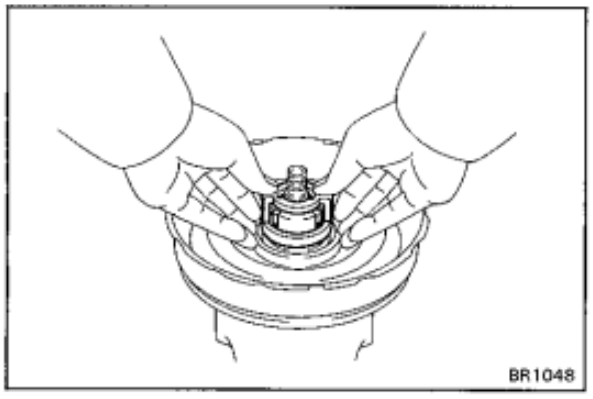

(i) Install the booster piston seal as shown, and check that there is no clearance between the No.2 piston and booster piston seal.

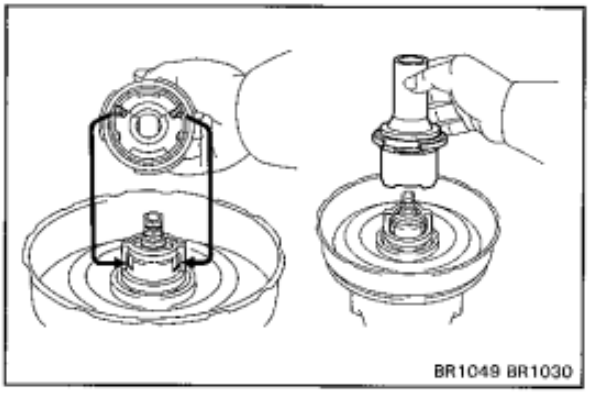

(j) Align the two holes of the No.2 piston and the matching protrusions on the No.1 piston as well as the cut portion of the reaction disc case head and matching portion inside the No.1 piston and install the No.1 piston.

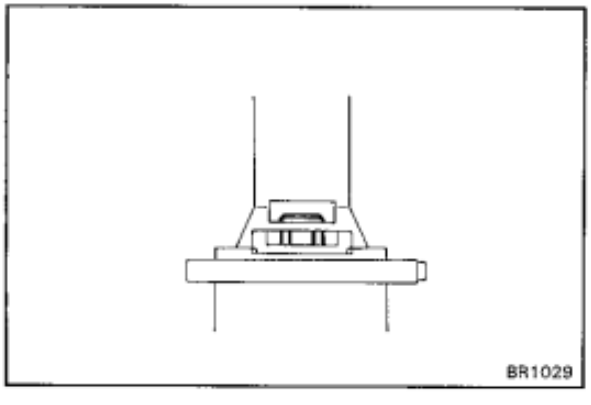

(k) Check that the sight in the stopper key hole is as shown in the illustration.

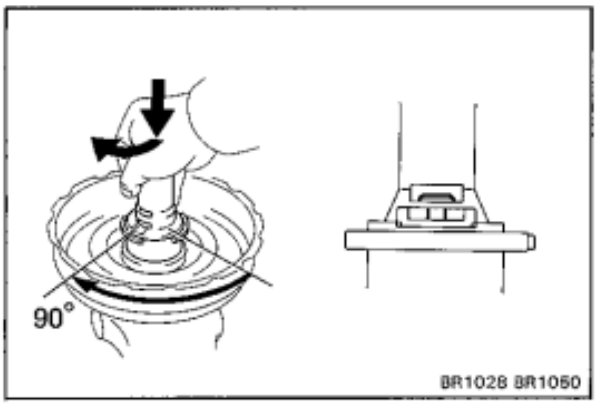

(l) While pushing in the No.1 piston, turn it a quarter of one turn, and check that the sight in the stopper key hole is as shown in the illustration.

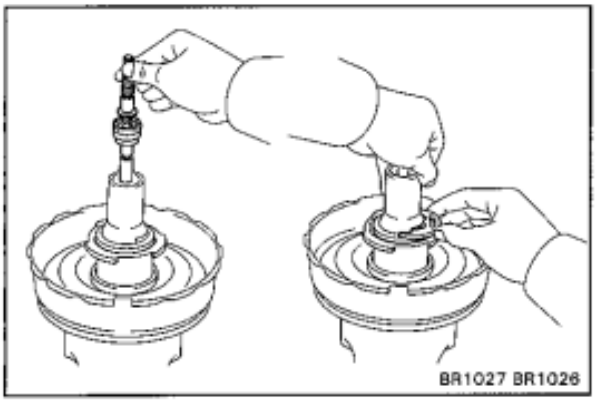

7. INSTALL AIR VALVE AND STOPPER KEY

(a) Install the air valve to the No.1 piston.

(b) Push in the valve operating rod and install the valve stopper key.

HINT: Install the stopper key as the stopper rubber on the key facing upward.

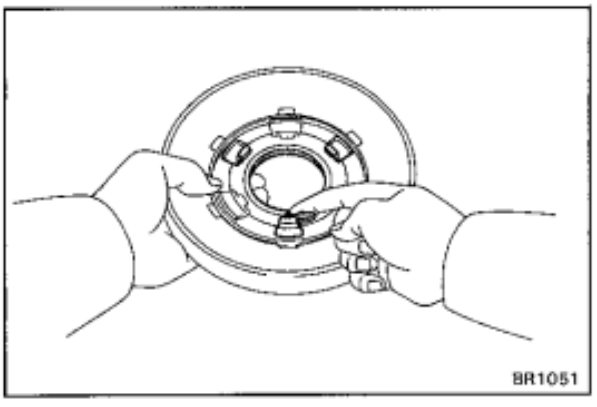

8. INSTALL NO.1 DIAPHRAGM AND PISTON PLATE TO CENTER PLATE ASSEMBLY

(a) Apply silicone grease to the piston plate where the No.1 diaphragm contacts.

(b) Install the No.1 diaphragm to the piston plate.

(c) Apply silicone grease to the piston plate subassembly, where the No.1 piston contacts as shown.

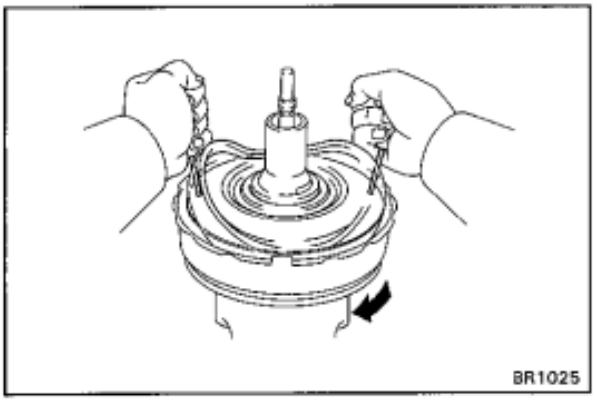

(d) Install the piston plate subassembly in place, and fold the No.1 diaphragm upward, insert the two pin punches into the holes on the piston plate.

(e) Push in and turn the piston plate clockwise until the plate locks.

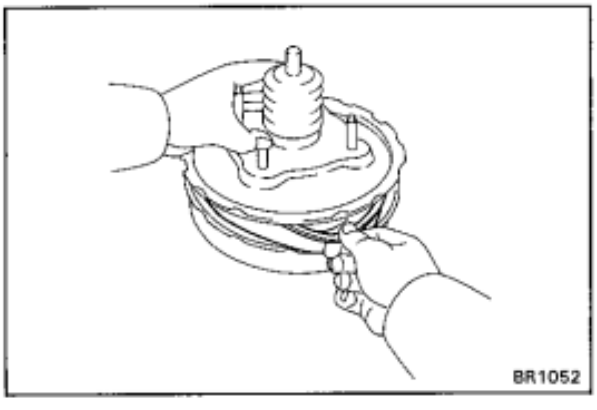

9. INSTALL REAR BODY TO CENTER PLATE ASSEMBLY

(a) Apply silicone grease to the inside of the rear body seal where the No.1 piston contacts.

(b) Align the matchmarks, and temporarily install the rear body and align the four cut portions of the rear body and protrusions of the center plate. Then lift up the rear body and install the No.1 diaphragm to the rear body outside ditch.

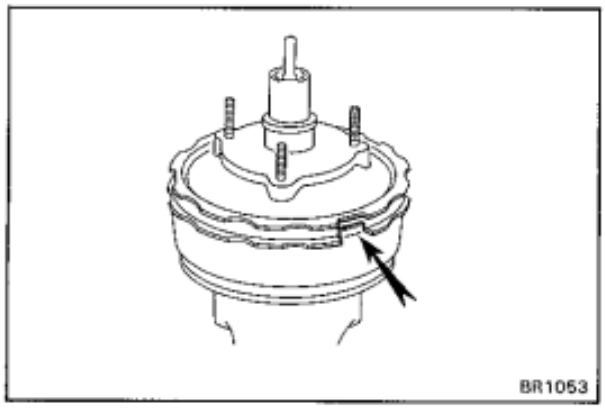

(c) Recheck that the four cut portions of the rear body are in alignment with the protrusions of the center plate, and install the rear body.

(d) Install the sponge element, felt element and boot to the No.1 piston.

(e) Apply silicone grease to the reaction disc and install it to the reaction disc case.

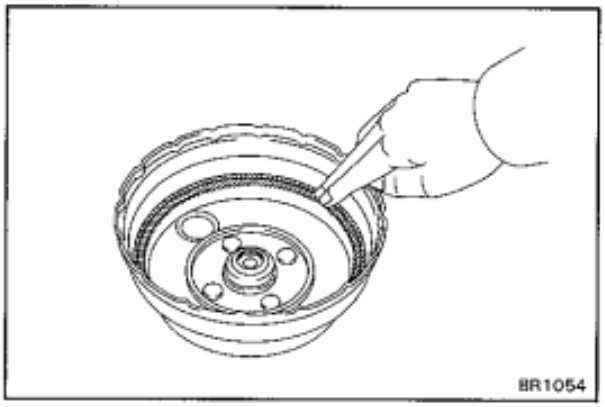

10. ASSEMBLE FRONT AND REAR BODIES

(a) Apply silicone grease to the front body as shown.

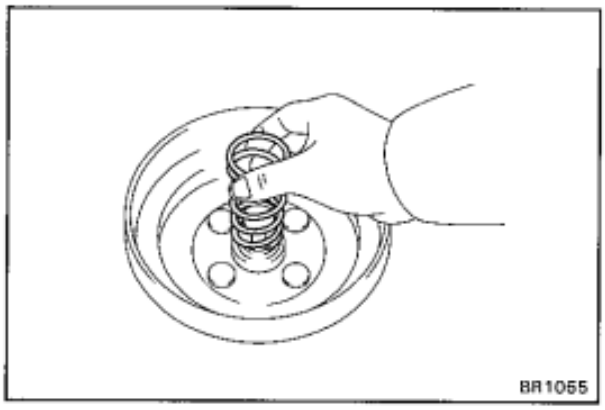

(b) Place the front body on SST.

SST 09753-00013 and 09753-40010

(c) Place the spring and push rod in the front body.

(d) Place the rear body assembly in the front body.

(e) Using SST, compress the piston return spring between the front and rear bodies.

NOTICE: Be careful not to tighten the two nuts of SST too tight.

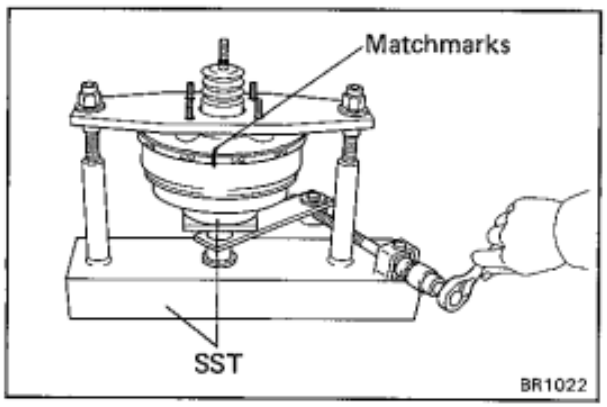

(f) Assemble the front and rear bodies by turning the front body counterclockwise until the matchmarks match.

JKC Type Single Booster

COMPONENTS

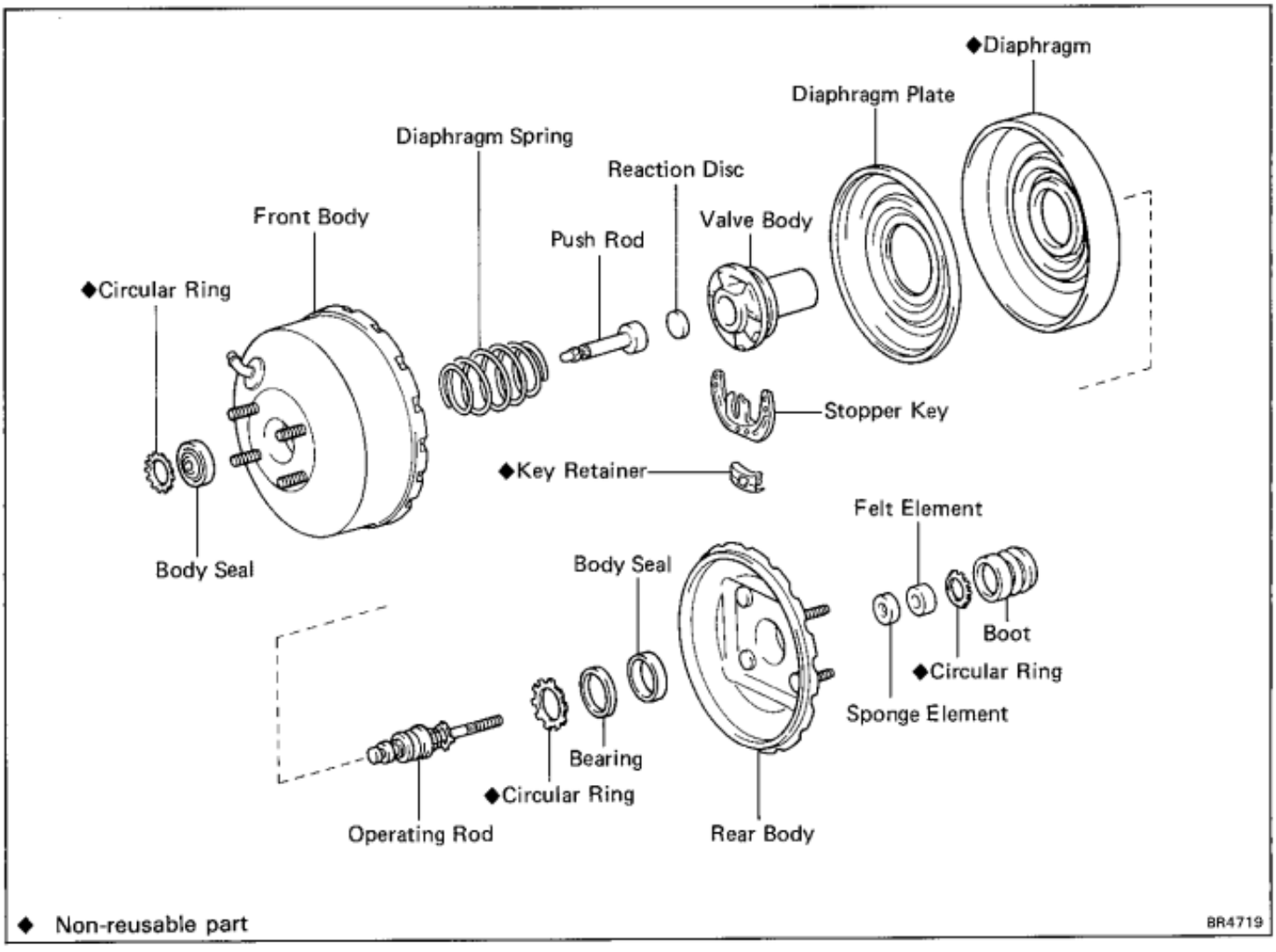

◆ Non-reusable part

BR4719

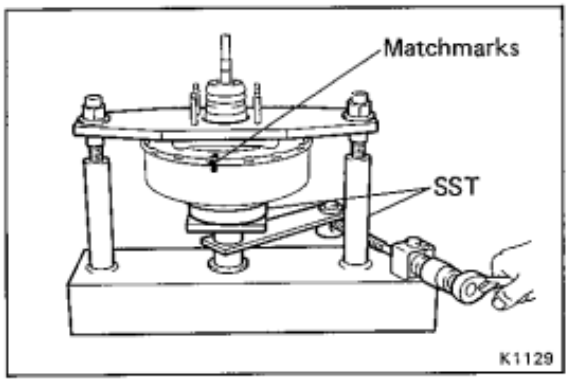

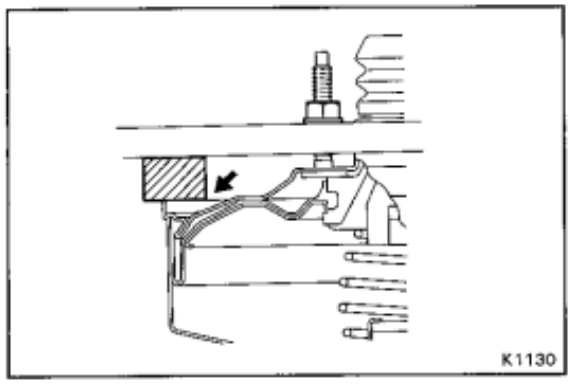

DISASSEMBLY OF BRAKE BOOSTER

1. SEPARATE FRONT AND REAR BODIES

(a) Put matchmarks on the front and rear bodies.

(b) Set the booster in SST.

SST 09753-00013 and 09753-40010

NOTICE: Be careful not to tighten the two nuts of SST too tight.

(c) Turn the front body clockwise until the front and rear bodies separate.

(d) Loosen the upper left and right nuts of SST, and insert pieces of wood between the front body and upper plate.

NOTICE: Be careful that the pieces of wood do not contact the rear body.

(e) Evenly tighten down the four booster mounting nuts to separate the front and rear bodies.

(f) Remove the diaphragm spring and push rod.

2. REMOVE BOOT FROM REAR BODY

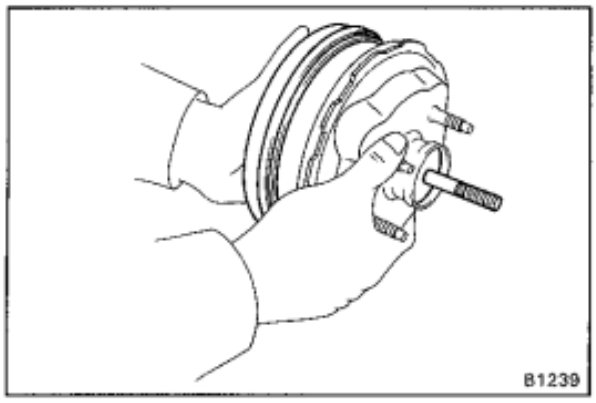

3. **REMOVE DIAPHRAGM ASSEMBLY FROM REAR BODY**

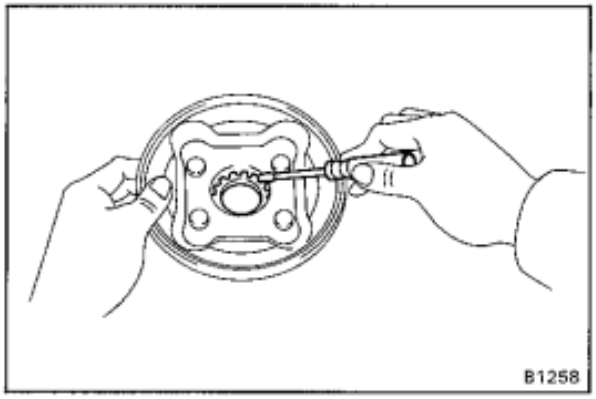

4. **REMOVE BEARING AND BODY SEAL FROM REAR BODY**

Using a screwdriver, pry out the circular ring , and remove the bearing and body seal.

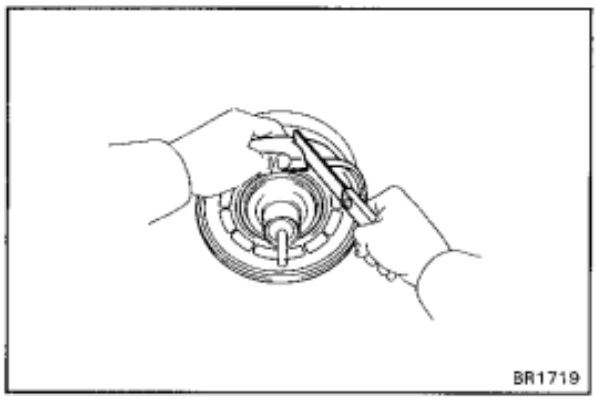

5. **REMOVE VALVE BODY AND DIAPHRAGM FROM DIAPHRAGM PLATE**

(a) Using a knife, cut off the diaphragm.

NOTICE: Be careful not to damage the valve body when cutting the diaphragm.

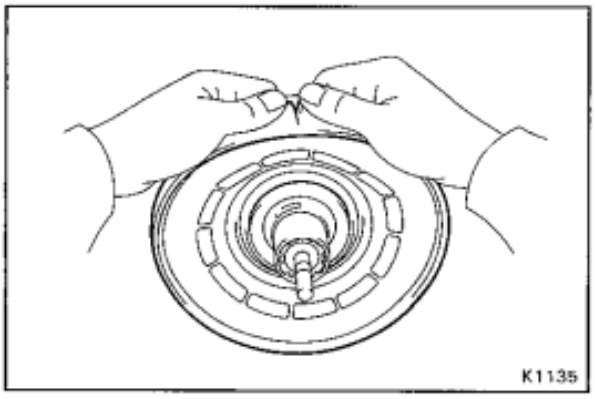

(b) Pull out diaphragm and remove the valve body.

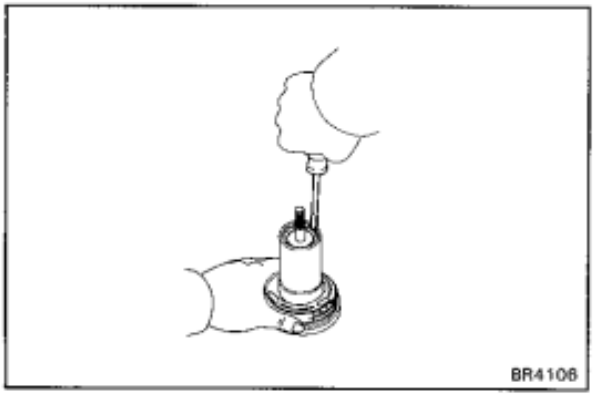

6. **REMOVE OPERATING ROD FROM VALVE BODY**

(a) Using a screwdriver, pry out the circular ring.

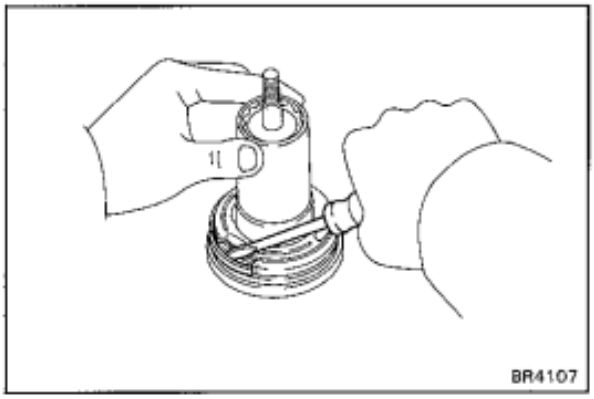

(b) Remove the key retainer.

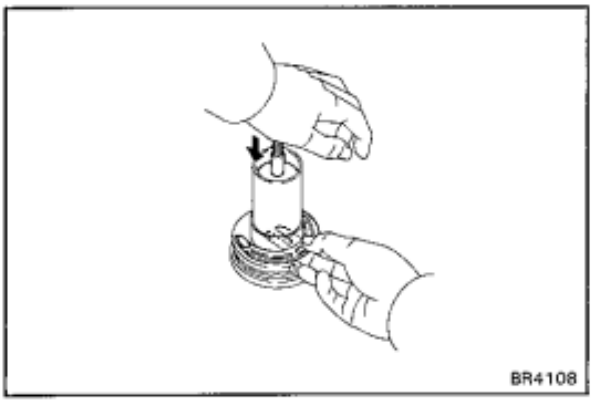

(c) While pushing in the operating rod, remove the stopper key.

(d) Pull out the operating rod with the two elements.

7. REMOVE REACTION DISC FROM VALVE BODY

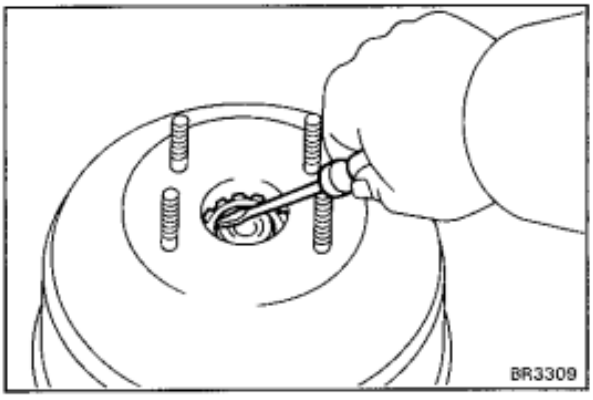

8. REMOVE BODY SEAL FROM FRONT BODY

Using a screwdriver, pry out the circular ring, and remove the body seal.

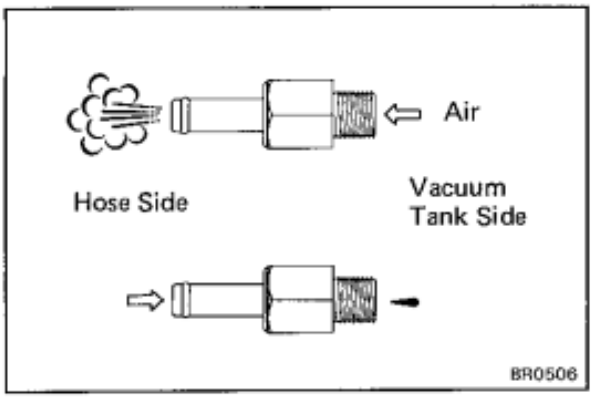

INSPECTION OF BRAKE BOOSTER COMPONENTS

INSPECT CHECK VALVE OPERATION

(a) Remove the check valve from the vacuum line.

(b) Check that air flows from the vacuum tank side to the hose side.

(c) Check that air does not flow from the hose side to the vacuum tank side.

If necessary, replace the check valve.

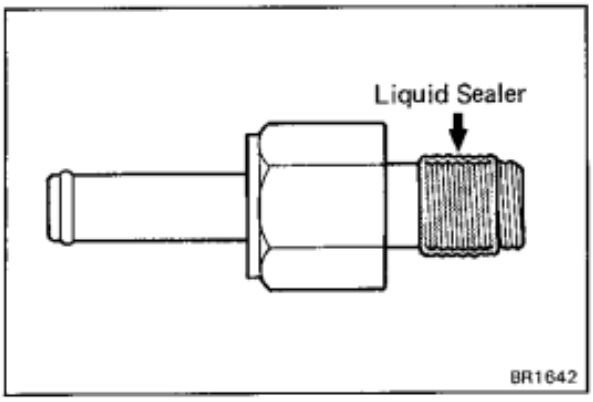

(d) Apply liquid sealer to the check valve as shown.

Sealant: Part No. 08826-00080 or equivalent

(e) Install the check valve.

Torque: 300 kg-cm (22 ft-lb, 29 N·m)

(f) Install the vacuum hose to the check valve with hose clamp.

ASSEMBLY OF BRAKE BOOSTER

(See page BR-34)

1. APPLY SILICONE GREASE TO PARTS SHOWN BELOW

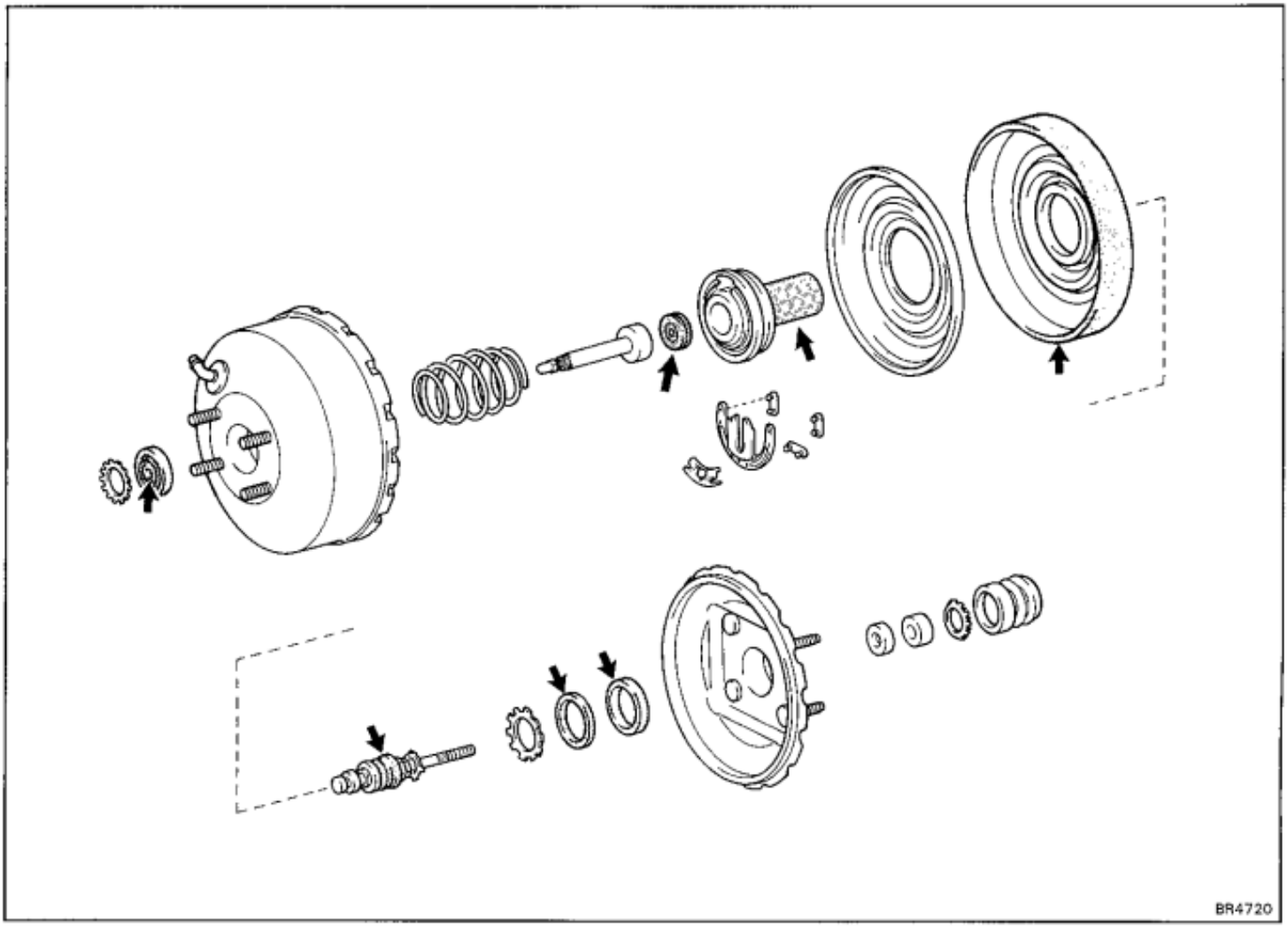

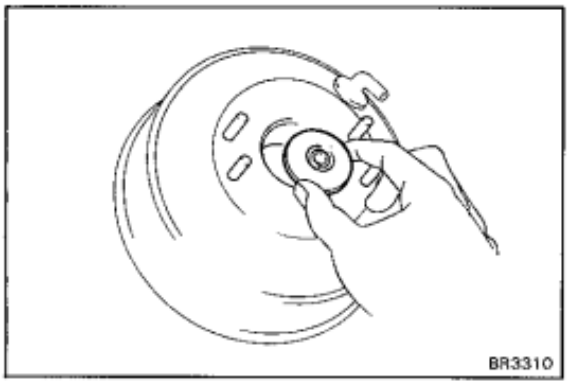

2. INSTALL BODY SEAL AND RETAINER TO FRONT BODY

(a) Place the body seal in position.

(b) Secure the body seal with a new circular ring.

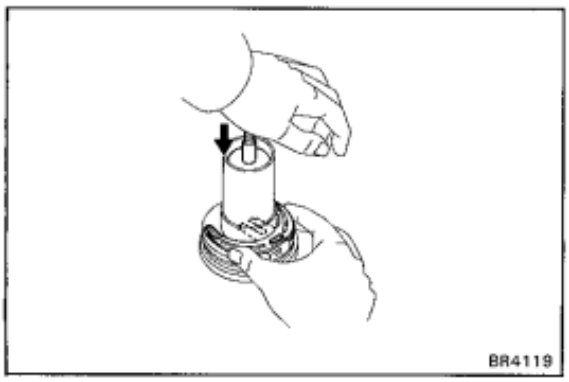

3. INSTALL OPERATING ROD TO VALVE BODY

(a) Insert the operating rod into the valve body.

(b) Push the operating rod in the valve body and install the stopper key.

HINT: Install the stopper key as the stopper rubber on the key facing upward.

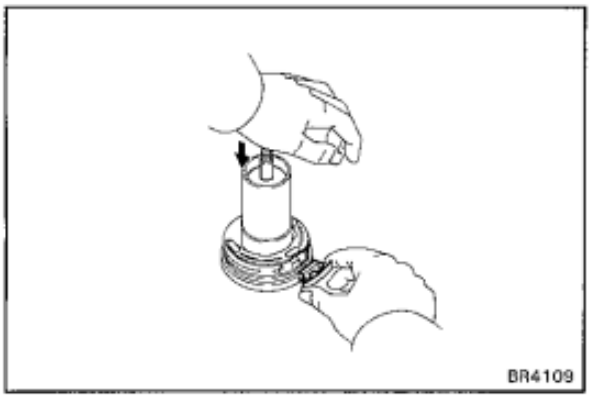
BR4109

(c) Install a new key retainer.

HINT: Align the retainer protrusion and valve body groove, insert the key retainer into the valve body until the clicking sound is heared.

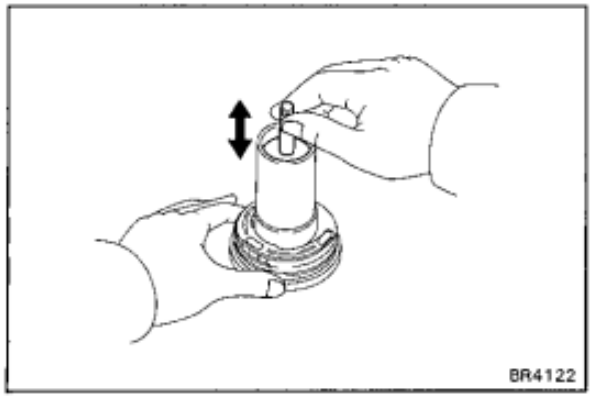
BR4122

(d) Pull the operating rod and confirm that the stopper key is working.

4. INSTALL REACTION DISC TO VALVE BODY

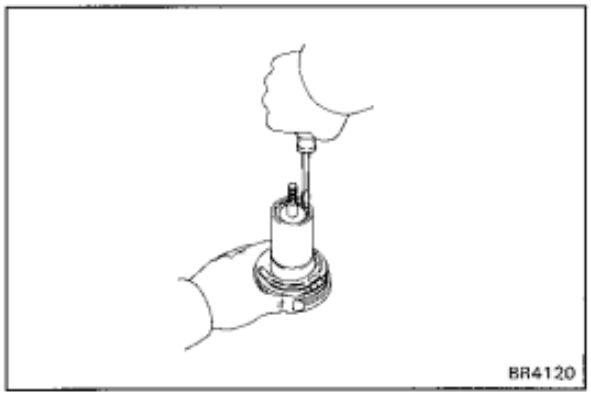
BR4120

5. INSTALL ELEMENTS

(a) Install the sponge element and felt element.

(b) Secure the elements with a new circular ring.

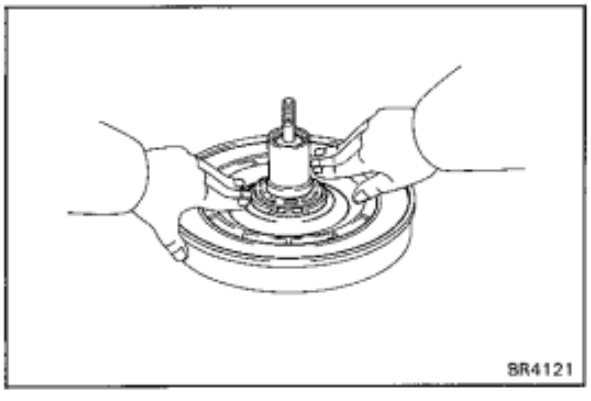
BR4121

6. INSTALL VALVE BODY AND DIAPHRAGM TO DIAPHRAGM PLATE

(a) Insert the valve body in the diaphragm plate.

(b) Install the diaphragm between the diaphragm plate and valve body.

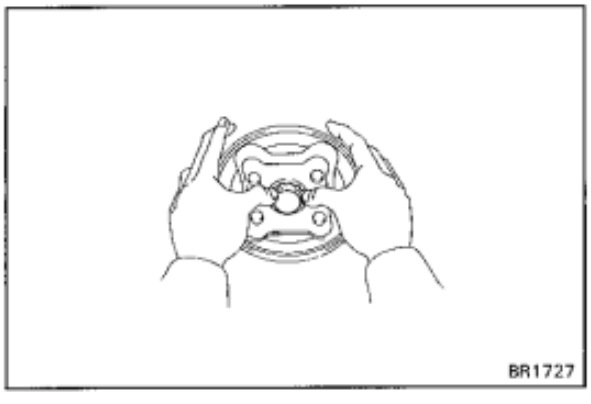
BR1727

7. INSTALL BODY SEAL AND BEARING TO REAR BODY

(a) Place the body seal and bearing in position.

(b) Secure the bearing with a new circular ring.

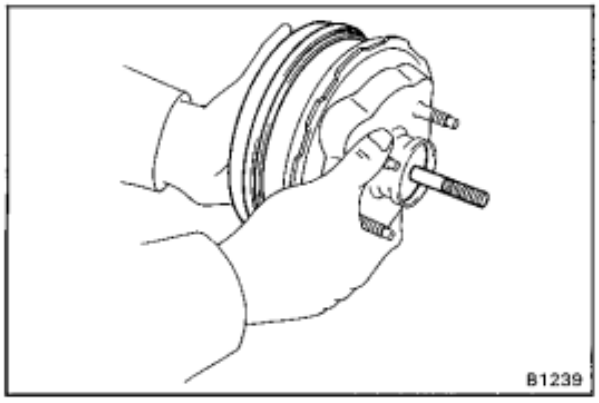

8. INSTALL DIAPHRAGM ASSEMBLY TO REAR BODY

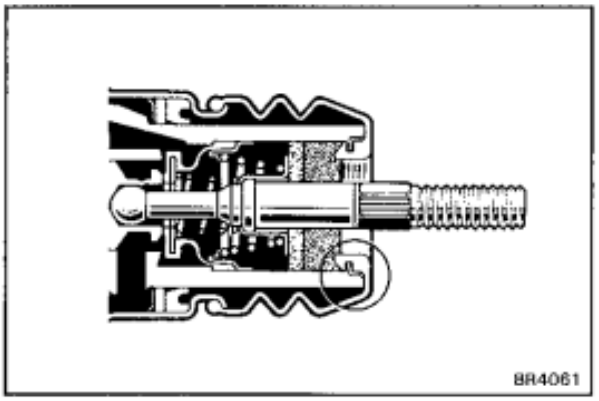

9. INSTALL BOOT TO REAR BODY

(a) Install the boot to the assembly.

(b) Check that the circular ring fit into the groove of the boot as shown in the illustration.

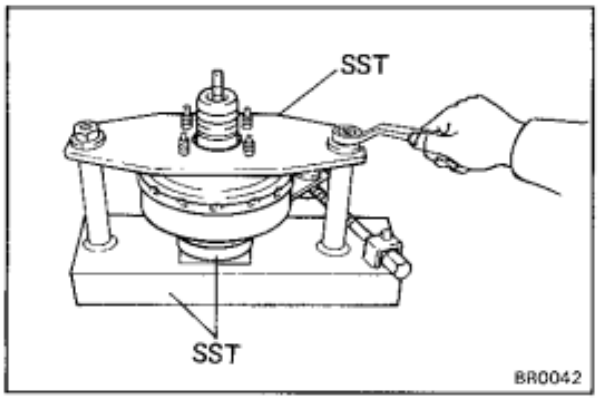

10. ASSEMBLE FRONT AND REAR BODIES

(a) Place the spring and push rod in the front body.

(b) Using SST, compress the spring between the front and rear bodies.

SST 09753-00013 and 09753-40010

NOTICE: Be careful not to tighten the two nuts of SST too tight.

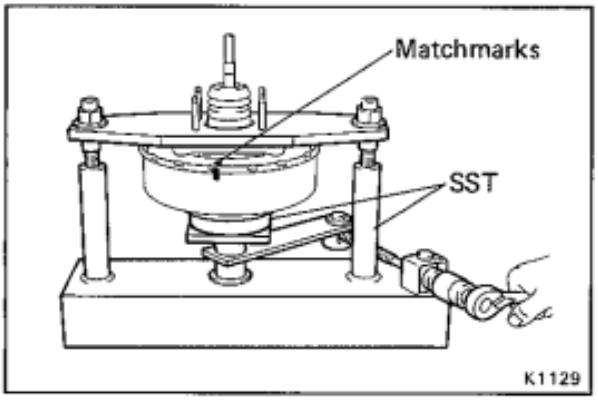

(c) Assemble the front and rear bodies by turning the front body counterclockwise until the matchmarks match.

HINT: If the front body is too tight to be turned, apply more silicone grease on the diaphragm edge that contacts the front and rear bodies.

JKC Type Tandem Booster

COMPONENTS

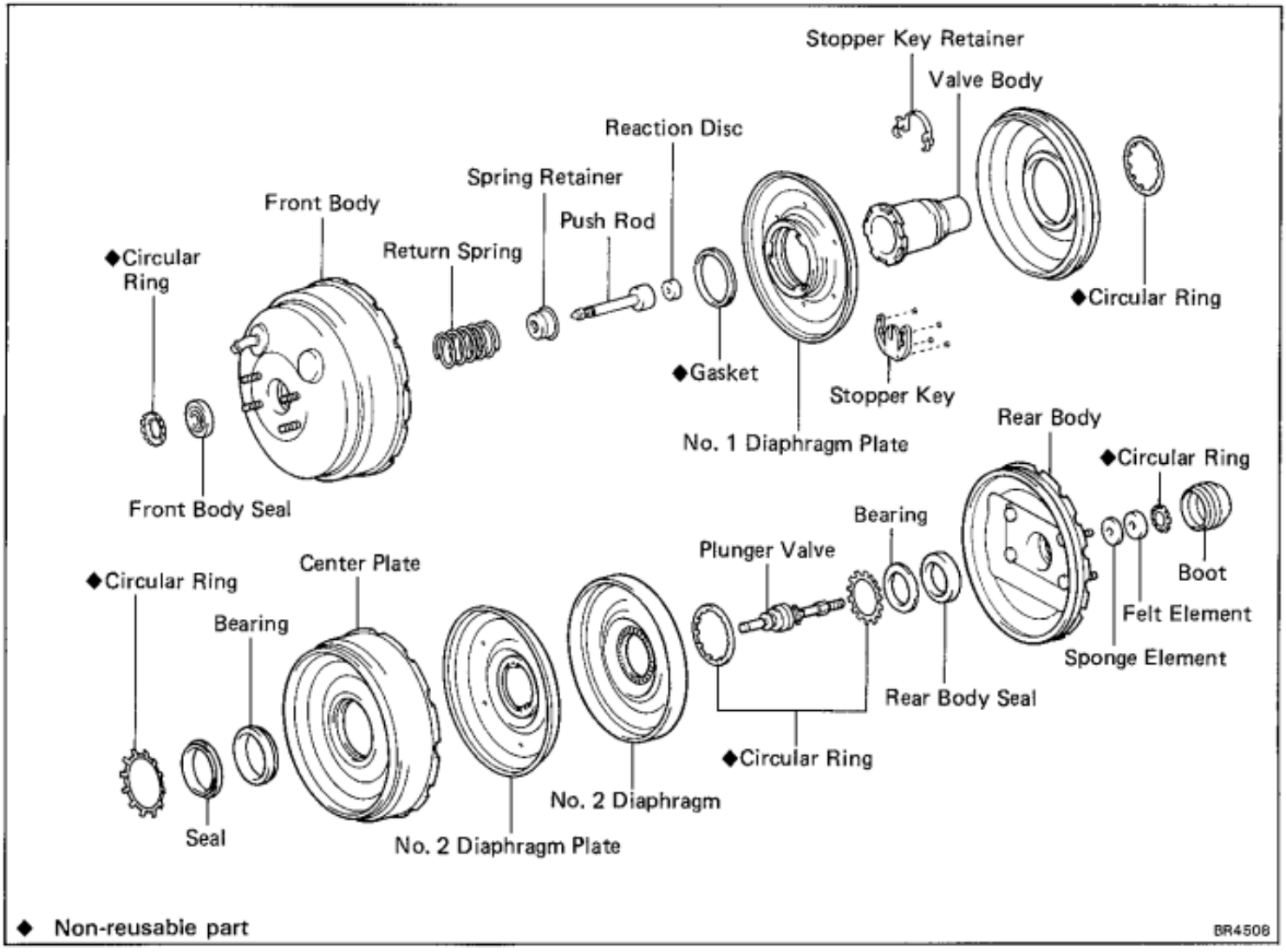

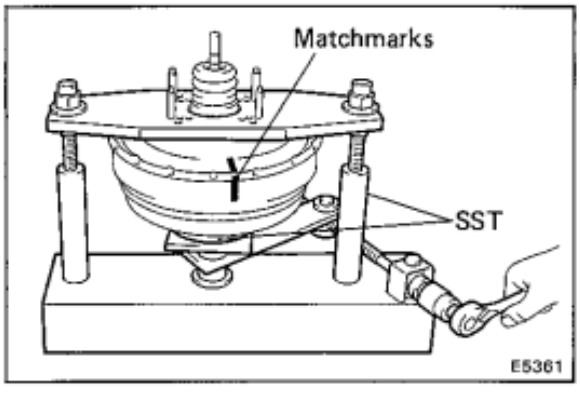

DISASSEMBLY OF BRAKE BOOSTER

1. **SEPARATE FRONT AND REAR BODIES**

   (a) Set the booster in SST.

   SST 09753-00013 and 09753-40010

   (b) Put matchmarks on the front and rear bodies.

   NOTICE: Be careful not to tighten the two nuts of the SST too tight.

   (c) Turn the front body clockwise to separate the front and rear bodies.

   (d) Remove the rear body, push rod, spring retainer and piston return spring from the front body.

2. **REMOVE BOOT FROM REAR BODY**

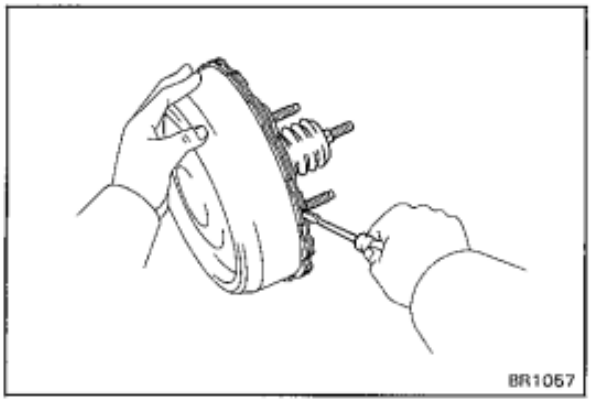

3. REMOVE REAR BODY FROM CENTER PLATE ASSEMBLY

Using a screwdriver, separate and remove the rear body from center plate assembly.

HINT: Tape the screwdriver tip before use.

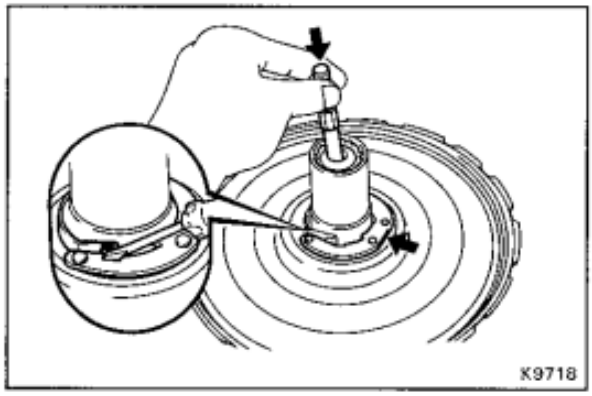

4. REMOVE PLUNGER VALVE

(a) Using a screwdriver, crush the protrusion of the stopper key retainer as shown in the illustration.

(b) While pushing in the plunger valve, remove the stopper key.

(c) Remove the stopper key retainer.

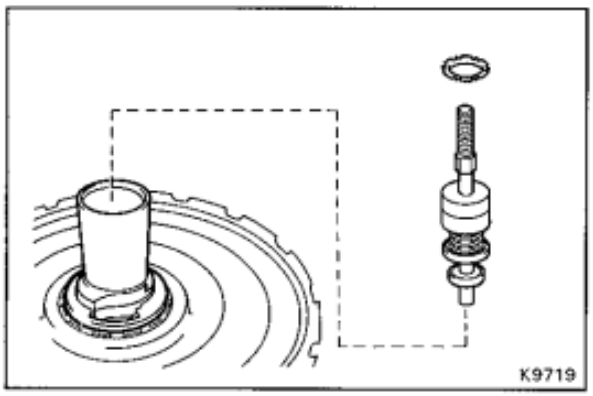

(d) Using a screwdriver, pry out the circular ring.

(e) Remove the plunger valve with the sponge and felt elements from the valve body.

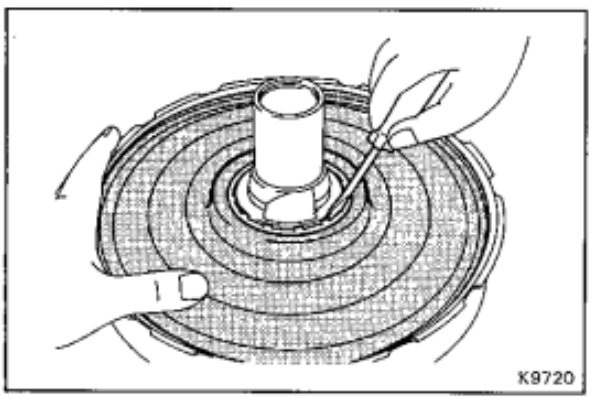

5. REMOVE NO.2 DIAPHRAGM

(a) Using a screwdriver, pry out the circular ring.

(b) Remove the No.2 diaphragm.

(c) Remove the No.2 diaphragm plate.

6. REMOVE CENTER PLATE FROM ASSEMBLY

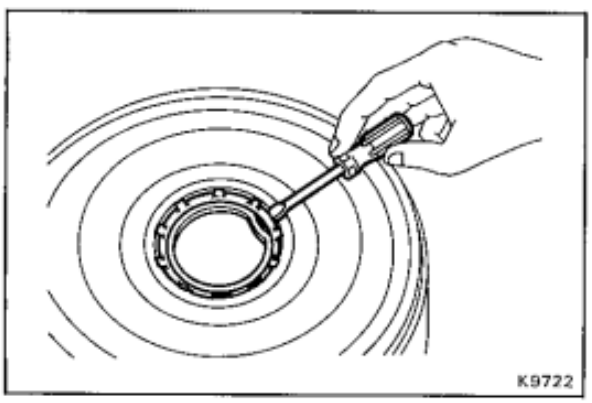

7. REMOVE SEAL AND BEARING FROM CENTER PLATE

(a) Using a screwdriver, pry out the circular ring from the center plate.

(b) Remove the seal and bearing.

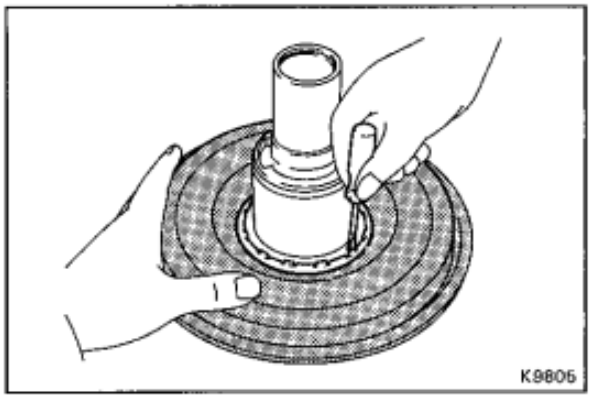

8. REMOVE NO.1 DIAPHRAGM

(a) Using a screwdriver, pry out the circular ring.

(b) Remove the No.1 diaphragm.

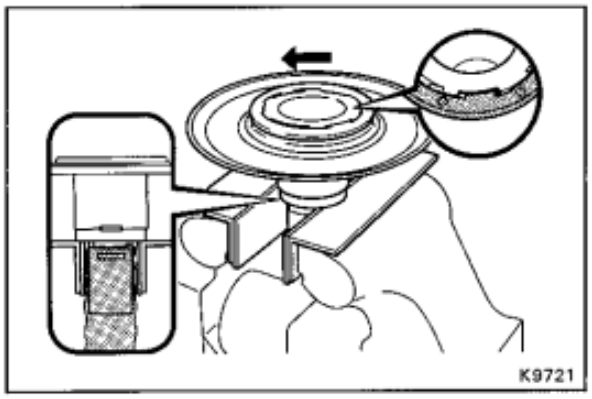

9. REMOVE NO.1 DIAPHRAGM PLATE

(a) Wind a cloth or an equivalent to the valve body, and using soft jaws, clamp the diaphragm plate assembly in the vise.

NOTICE: Do not tighten the vise too tight.

(b) Using a screwdriver, lift up the protrusion of the No.1 diaphragm plate and turn the plate one third of one turn counterclockwise.

(c) Remove the No.1 diaphragm plate and O-ring.

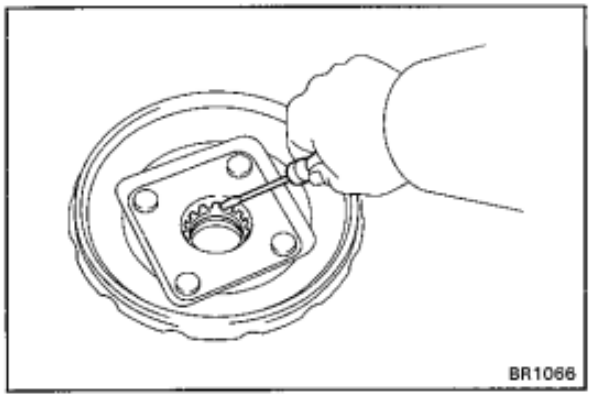

10. REMOVE BODY SEAL AND BEARING FROM REAR BODY

(a) Using a screwdriver, pry out the circular ring from the rear body.

(b) Remove the body seal and bearing.

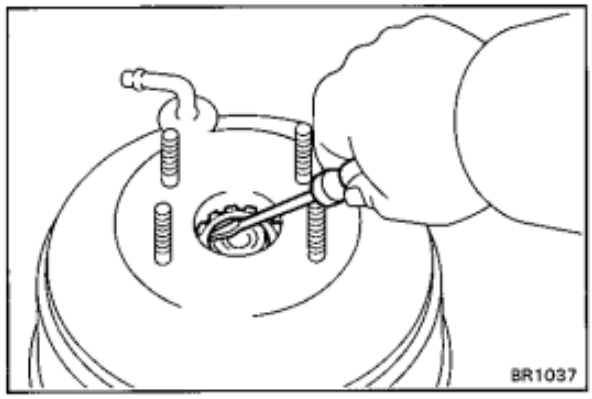

11. REMOVE BODY SEAL FROM FRONT BODY

(a) Using a screwdriver, pry out the circular ring.

(b) Remove the body seal.

INSPECTION OF BRAKE BOOSTER COMPONENTS

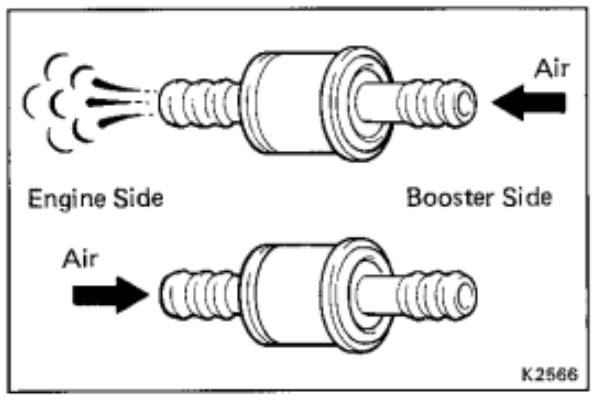

INSPECT CHECK VALVE OPERATION

(a) Remove the check valve.

(b) Check that air flows from the booster side to the engine side.

(c) Check that air does not flow from the engine side to the booster side.

If necessary, replace the check valve.

(d) Install the check valve in place.

ASSEMBLY OF BRAKE BOOSTER

(See page BR-40)

1. APPLY SILICONE GREASE TO PARTS SHOWN BELOW

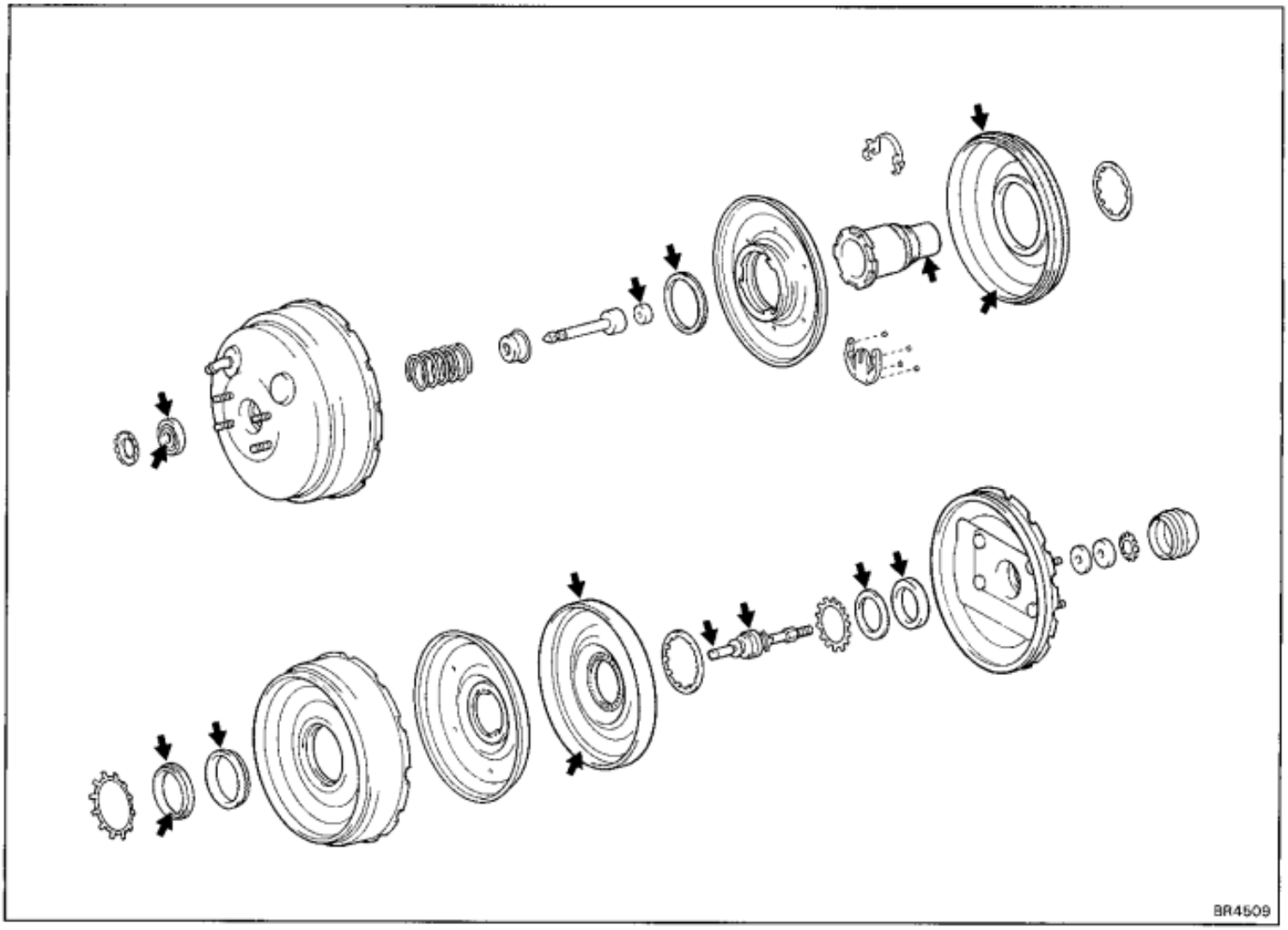

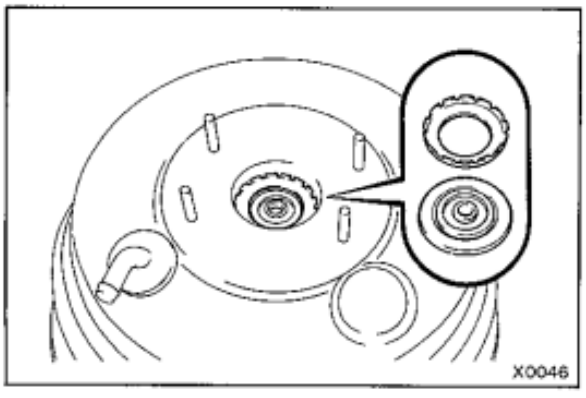

2. INSTALL BODY SEAL TO FRONT BODY
   (a) Apply silicone grease to the body seal and install it to the front body.
   (b) Secure the body seal with a new circular ring.

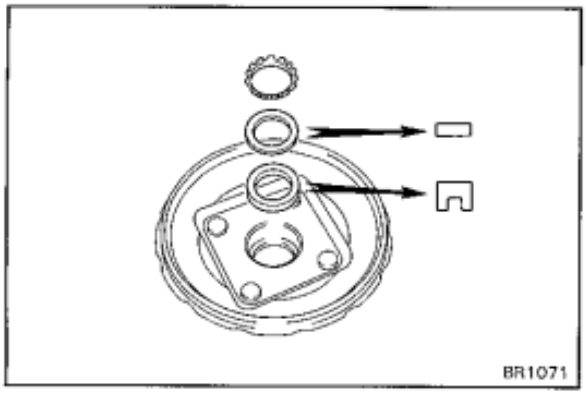

3. INSTALL BODY SEAL TO REAR BODY
   (a) Apply silicone grease to the body seal and install it to the rear body.
   (b) Install the bearing and secure the body seal and bearing with a new circular ring.

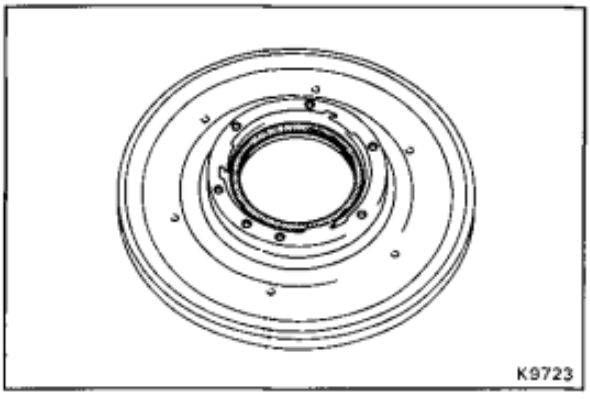

4. INSTALL No.1 DIAPHRAGM PLATE TO VALVE BODY

(a) Install a new O-ring to the NO.1 diaphragm plate.

(b) Set the No.1 diaphragm plate on the valve body.

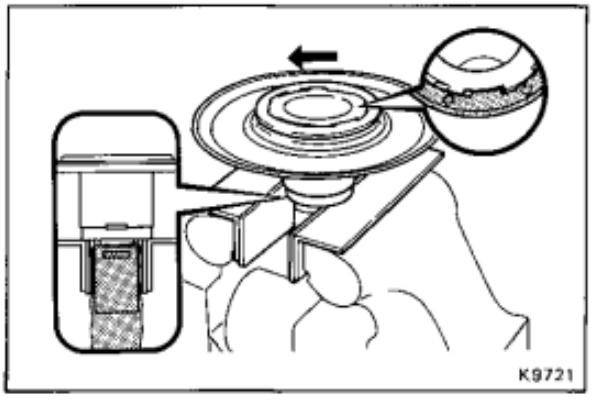

(c) Wind a cloth or an eguivalent to the valve body, and using soft jaws, clamp the diaphragm plate assembly in the vise.

NOTICE: Do not tighten the vise too tight.

(d) Align the protrusion of the No.1 diaphragm plate and cut portion of the valve body, then turn the plate one third of one turn counterclockwise.

(e) Stake the protrusion of the No.1 diaphragm plate.

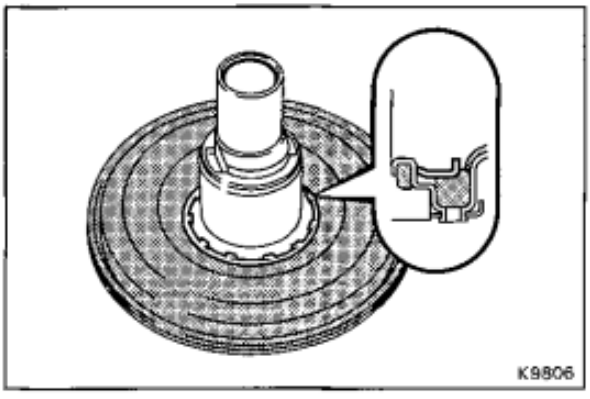

5. INSTALL NO.1 DIAPHRAGM

(a) Install the No.1 diaphragm onto the No.1 diaphragm plate.

(b) Secure the diaphragm with the new circular ring.

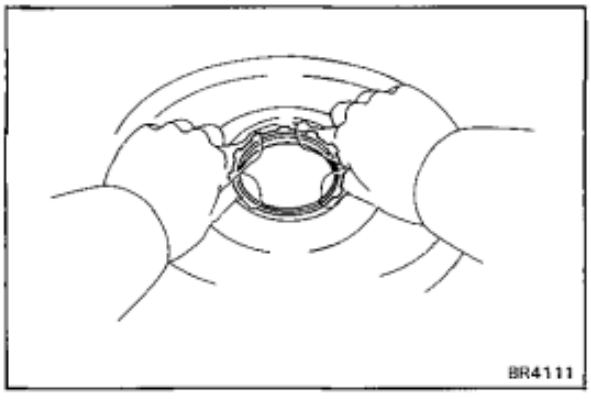

6. ASSEMBLE CENTER PLATE ASSEMBLY

(a) Install the bearing and a new circular ring to the seal.

(b) Install the seal assembly to the center plate.

(c) Apply silicone grease on the circular ring with the thickness about 2.0 mm (0.79 in.).

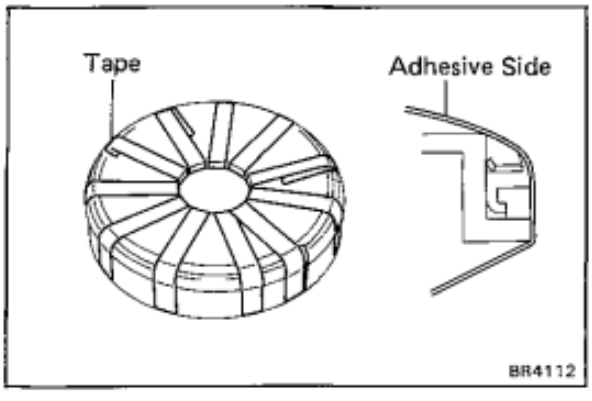

(d) Wind the thin tape to the center plate as shown in the illustration so as not to the seal lip fold under when inserting the valve body.

HINT: Wind the tape so the adhesive side faces the outside.

(e) Apply silicon grease to the tape and valve body contact portions.

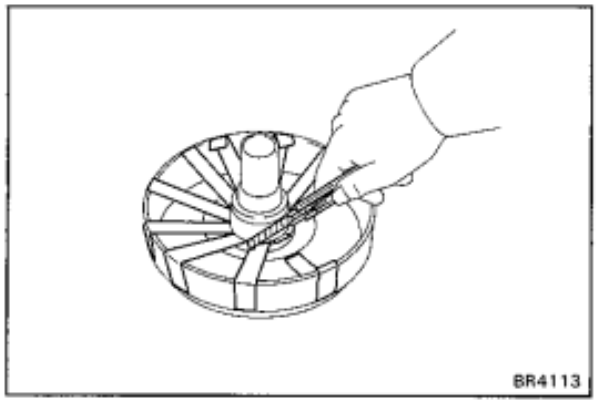

(f) Install the center plate to the valve body.

NOTICE: Be careful not to the seal lip fold under.

(g) Cut off the tapes and pull out them.

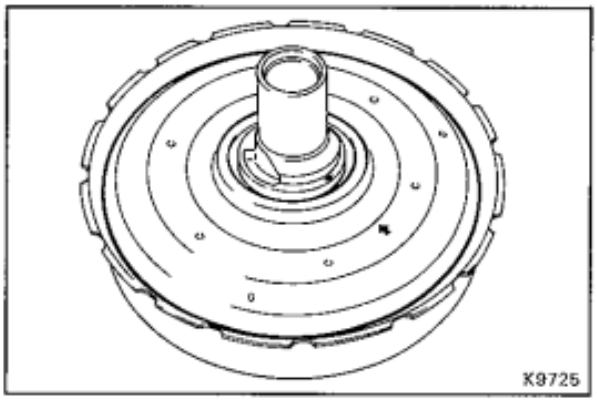

7. INSTALL NO.2 DIAPHRAGM PLATE

Align the arrows on the valve body and No.2 diaphragm plate, then install the diaphregm plate to the valve body.

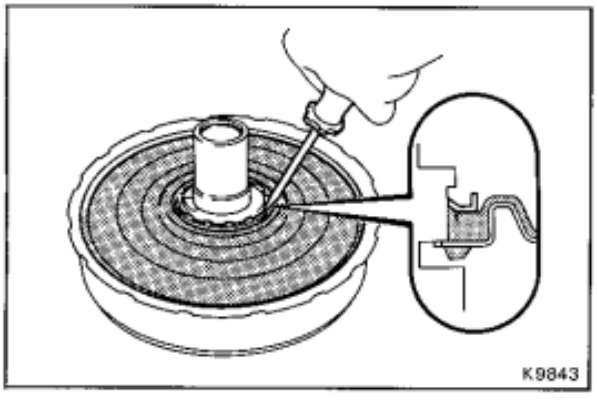

8. INSTALL NO.2 DIAPHRAGM

(a) Install the No.2 diaphragm onto the No.2 diaphragm plate.

(b) Secure the diaphragm with a new circular ring.

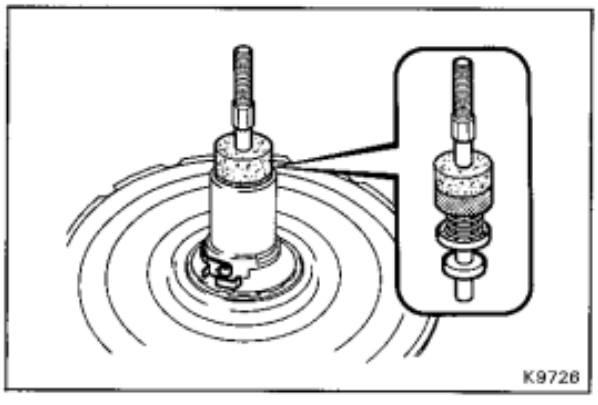

9. INSTALL PLUNGER VALVE

(a) Install the sponge and felt elements to the plunger valve.

(b) Install the plunger valve to the valve body.

(c) Install the stopper key retainer to the valve body.

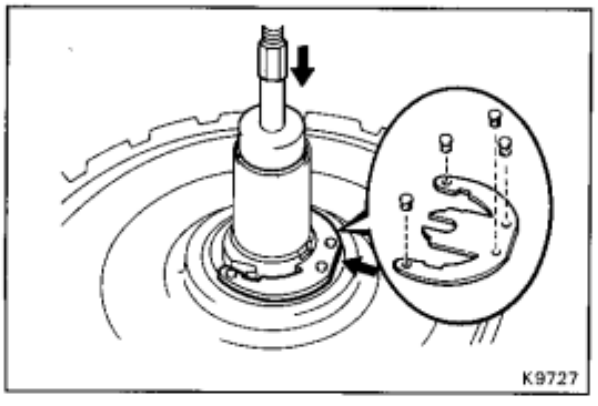

(d) While pushing in the plunger valve, install the stopper key.

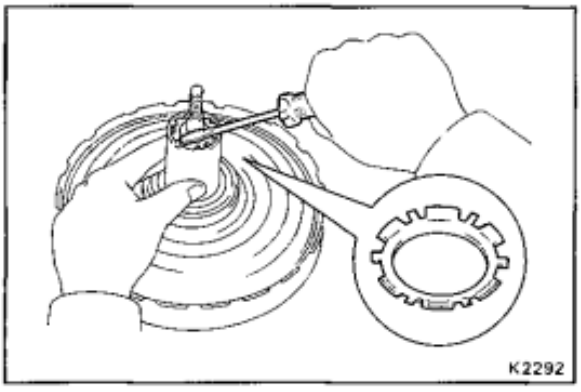

(e) Secure the plunger valve with a new circular ring.

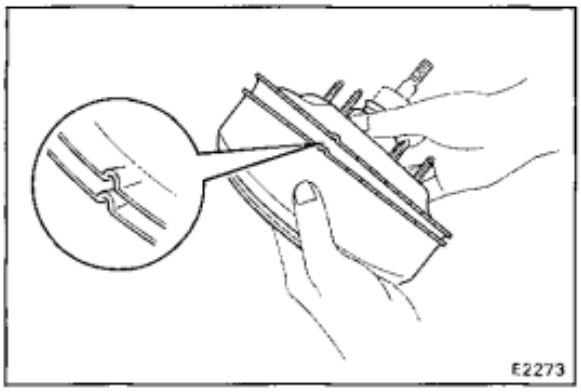

10. INSTALL REAR BODY TO CENTER PLATE ASSEMBLY

Align the each protrusions of the center plate and rear body, install the rear body to the center plate assembly.

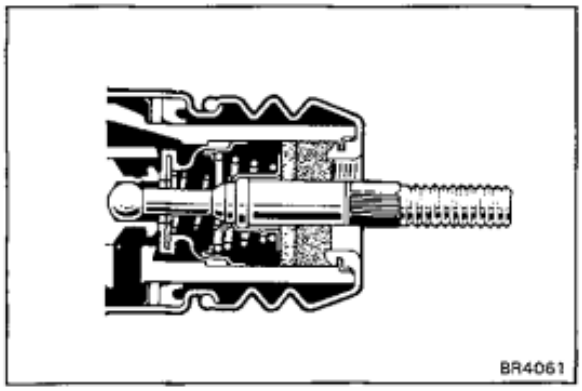

11. INSTALL BOOT

(a) Install the boot to the assembly.

(b) Check that the circular ring fit into the groove of the boot as shown in the illustration.

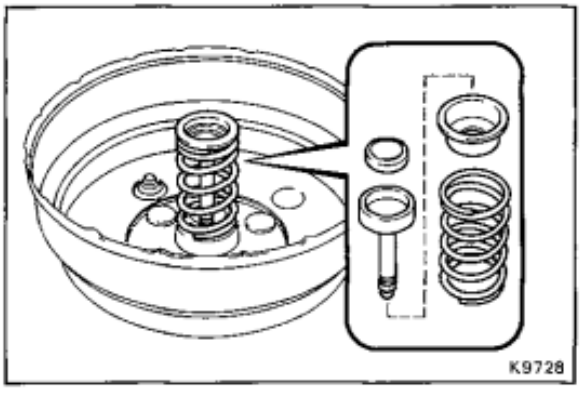

12. ASSEMBLE FRONT AND REAR BODIES

(a) Place the front body on SST.

SST 09753-00013 and 09753-40010

(b) Install the following parts to the front body.

- Return spring
- Spring retainer
- Push rod
- Reaction disc

HINT: Before installing the reaction disc, apply silicon grease to the reaction disc.

(c) Place the rear body assembly into the front body.

(d) Using SST, compress the spring between the front and rear bodies.

SST 09753-00013 and 09753-40010

NOTICE: Be careful not to tighten the two nuts of SST too tight.

(e) Assemble the front and rear bodies by turning the front body counterclockwise until the matchmarks match.

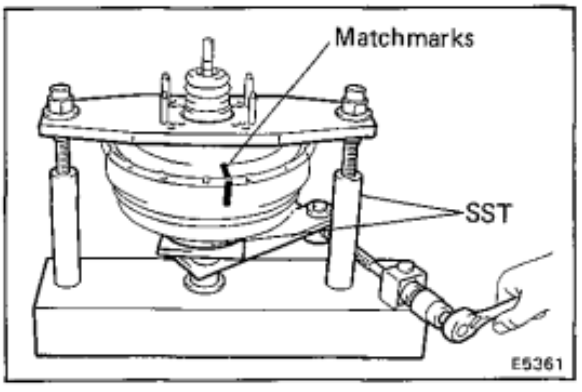

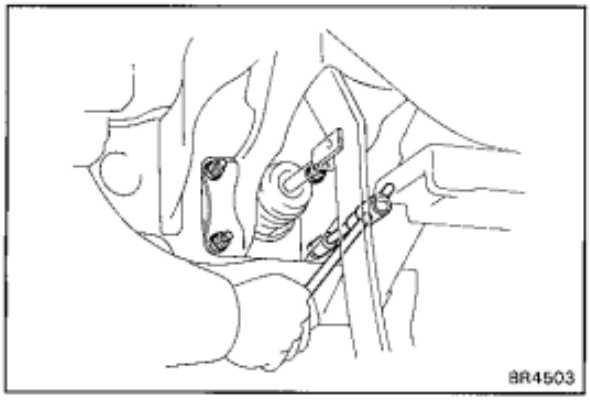

INSTALLATION OF BRAKE BOOSTER

(See page BR-17)

1. INSTALL BRAKE BOOSTER AND CLEVIS

Install the brake booster, and torque the four nuts.

Torque: 130 kg-cm (9 ft-lb, 13 N·m)

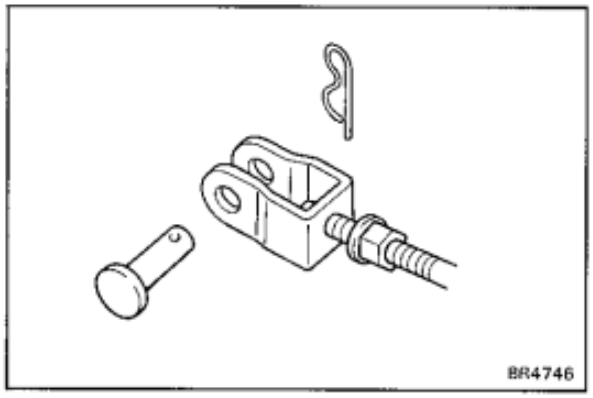

2. CONNECT CLEVIS TO BRAKE PEDAL

Insert the clevis pin into the clevis and brake pedal and install the clip to the clevis pin.

3. INSTALL PEDAL RETURN SPRING

4. CONNECT VACUUM HOSE TO BRAKE BOOSTER

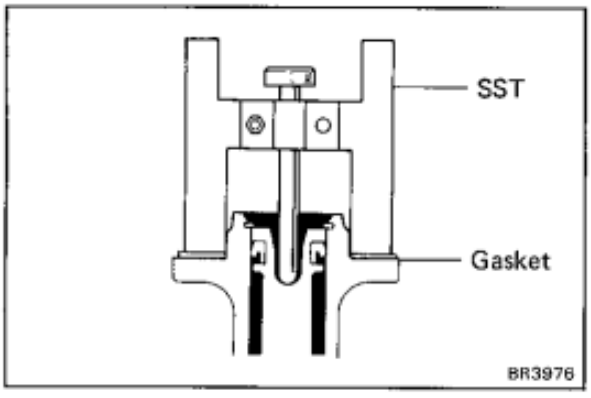

5. ADJUST LENGTH OF BOOSTER PUSH ROD

(a) Install the gasket on the master cylinder.

(b) Set the SST on the gasket, and lower the pin until its tip slightly touches the piston.

SST 09737-00010

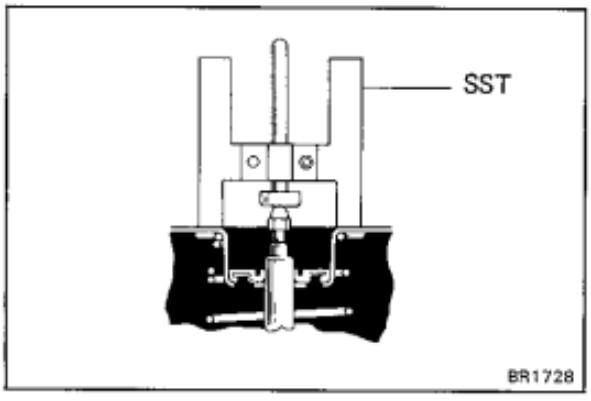

(c) Turn SST upside down, and position it on the booster.

SST 09737-00010

(d) Measure for clearance between the booster push rod and pin head (SST).

Clearance: 0 mm (0 in.)

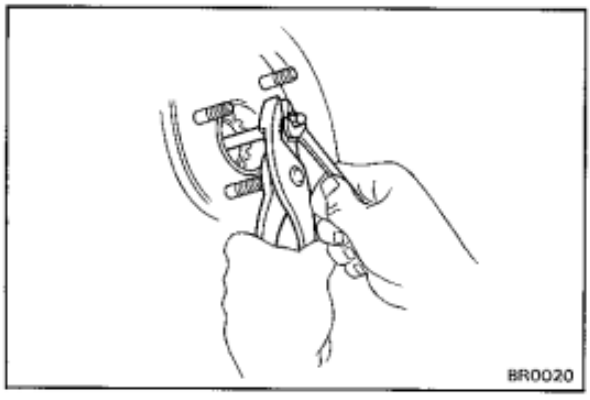

(e) Adjust the booster push rod length until the push rod lightly touches the pin head.

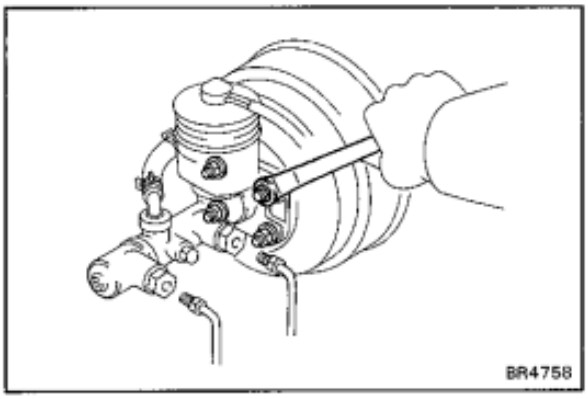

6. INSTALL MASTER CYLINDER
(See page BR-10)

7. FILL BRAKE RESERVOIR WITH BRAKE FLUID AND BLEED BRAKE SYSTEM
(See page BR-7)

8. CHECK FLUID LEAKAGE

9. CHECK AND ADJUST BRAKE PEDAL
(See page BR-6)

10. PERFORM OPERATIONAL CHECK
(See page BR-7)

VACUUM PUMP (For 1HZ, 1PZ Engine)

COMPONENTS

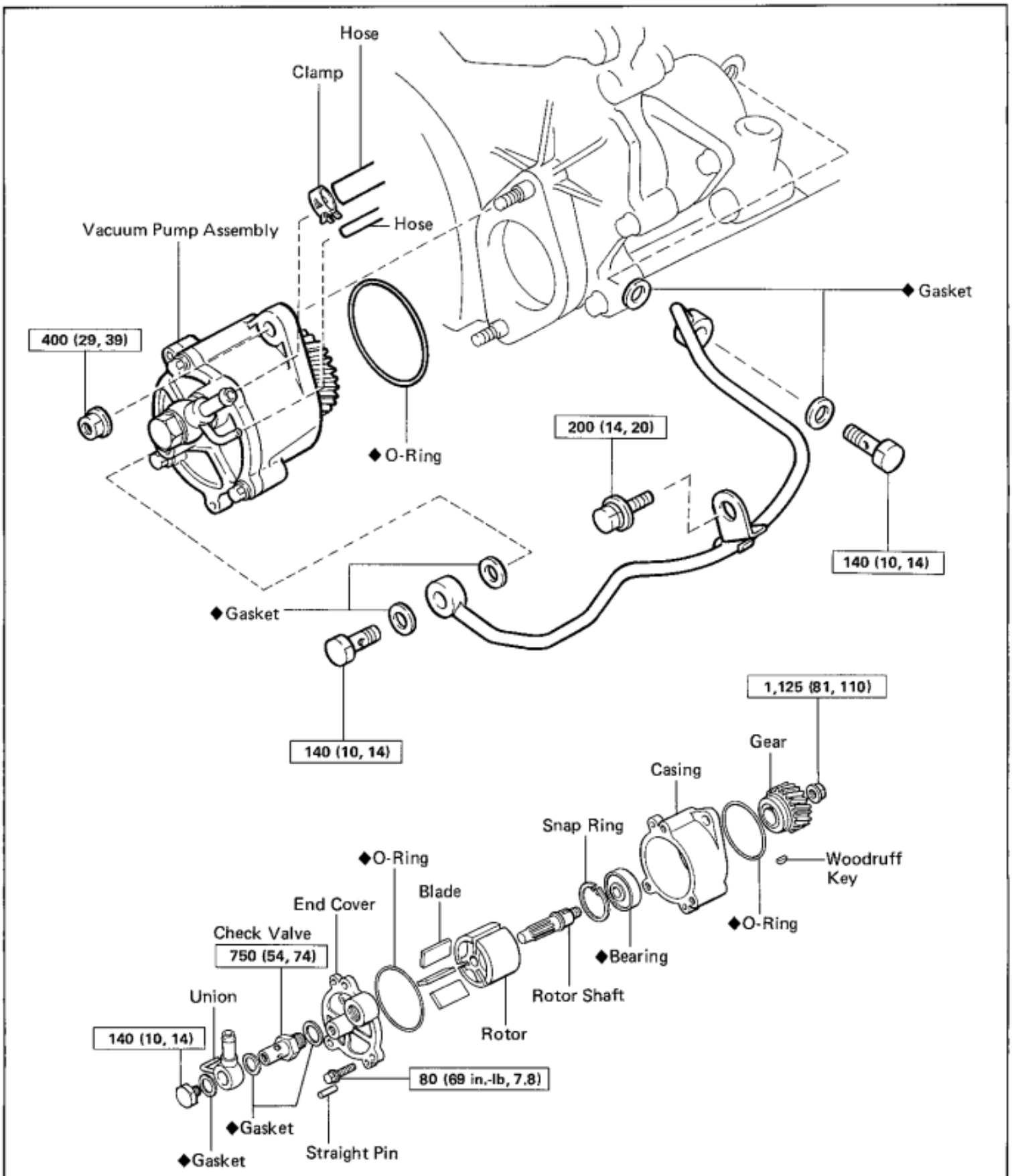

kg-cm (ft-lb, N·m) : Specified torque

◆ Non-reusable part

X3519
BR4507

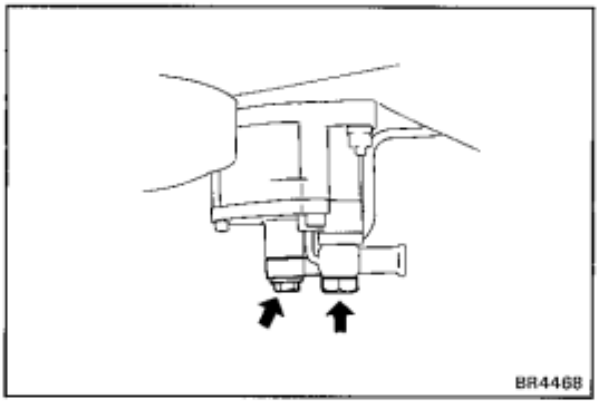

REMOVAL OF VACUUM PUMP

REMOVE VACUUM PUMP

(a) Remove the two union bolt and disconnect oil tube from the vacuum pump.

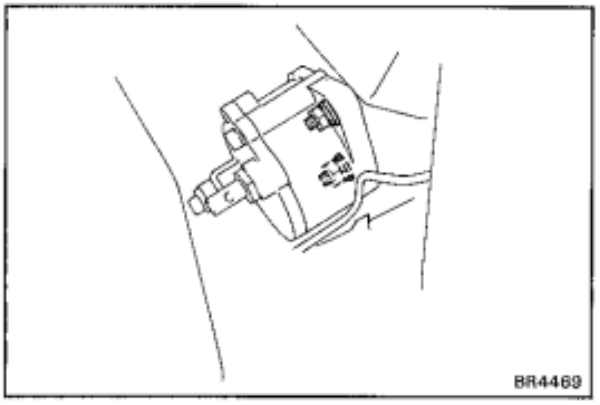

(b) Remove the two bolts and remove the pump from the engine.

(c) Remove the O-ring.

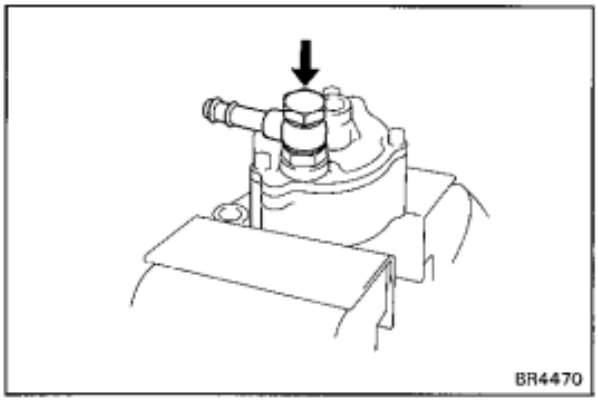

DISASSEMBLY OF VACUUM PUMP

1. REMOVE VACUUM HOSE UNION

(a) Using soft jaws on the vise, place the vacuum pump in the vise.

NOTICE: Do not tighten the vise too tightly.

(b) Remove the union bolt, union and two gaskets.

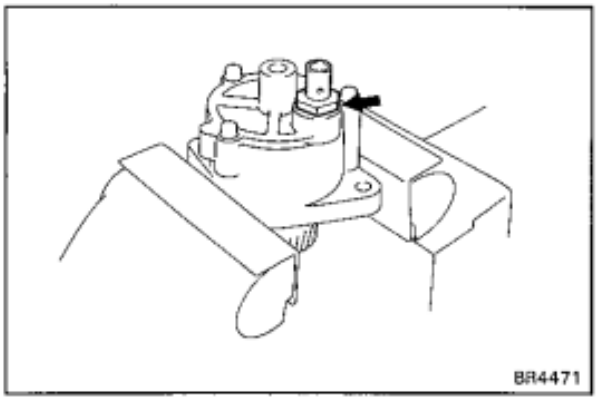

2. REMOVE CHECK VALVE

Remove the check valve and gasket.

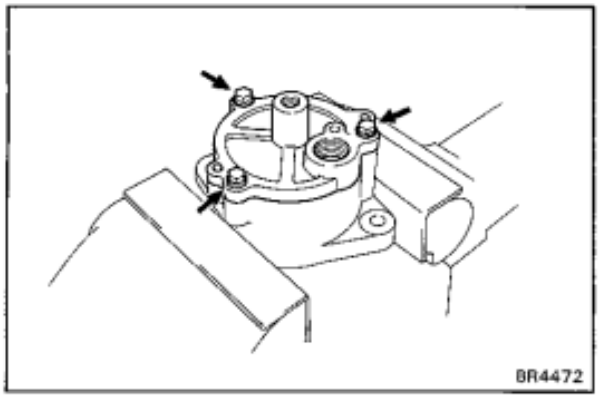

3. REMOVE END COVER

(a) Remove the three bolts.

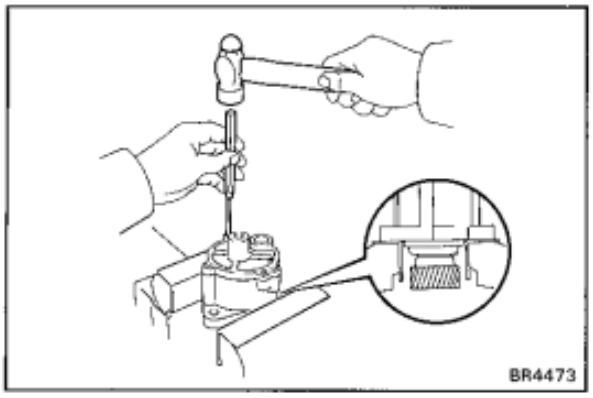

(b) Place the vacuum pump on vise as shown in the illustration.

NOTICE: Do not tighten the vise.

(c) Using a pin punch and a hammer, drive out the two straight pins.

(d) Remove the end cover and O-ring.

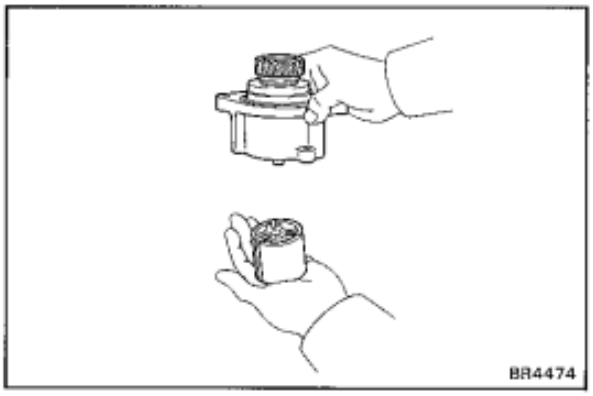

4. REMOVE ROTOR AND THREE BLADES

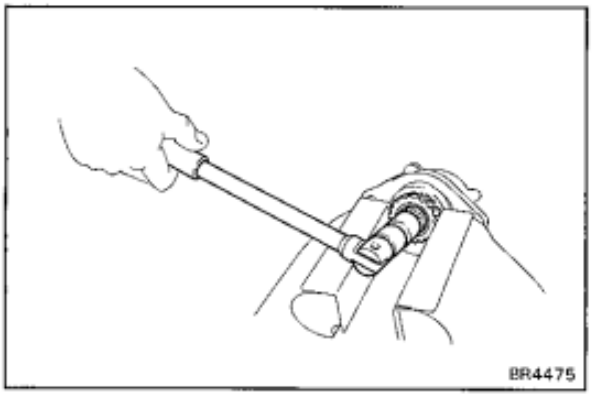

5. REMOVE GEAR

(a) Using soft jaws on the vise, clamp the gear in the vise.

(b) Remove the gear lock nut.

(c) Remove the gear and woodruff key.

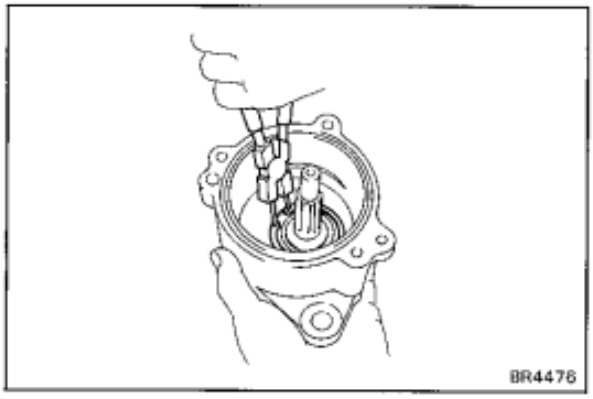

6. REMOVE SNAP RING

Using snap ring pliers, remove the snap ring.

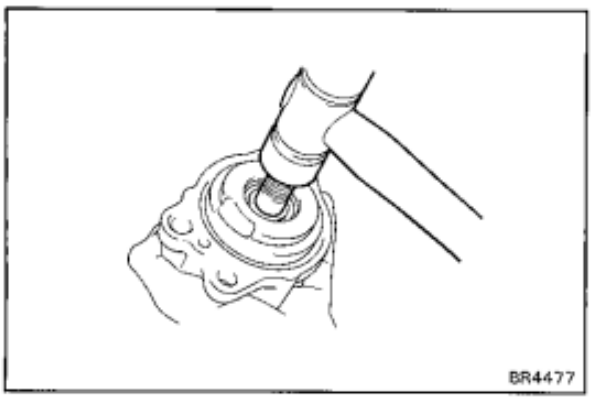

7. REMOVE ROTOR SHAFT

Using a plastic hammer, tap out the rotor shaft.

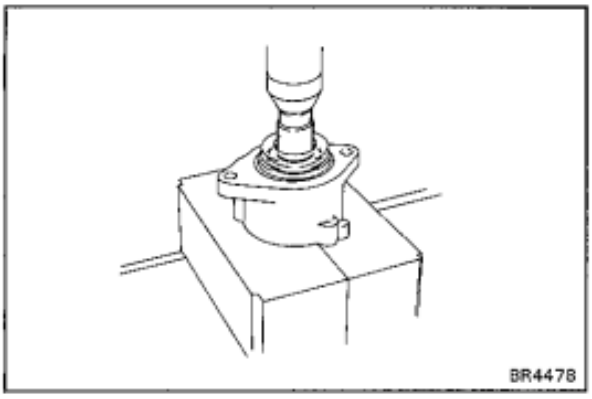

8. REMOVE BEARING

Using a press and 17 mm socket wrench, press out the bearing.

INSPECTION OF VACUUM PUMP

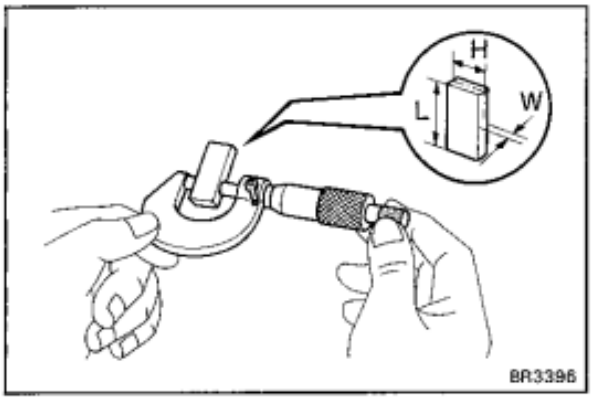

1. INSPECT BLADES

(a) Check the blades for wear or damage.

(b) Using calipers, measure the height, width and length of the blades.

Minimum height: 16.50 mm (0.6496 in.)

Minimum width: 4.95 mm (0.1949 in.)

Minimum length: 44.96 mm (1.7701 in.)

If necessary, replace the blades.

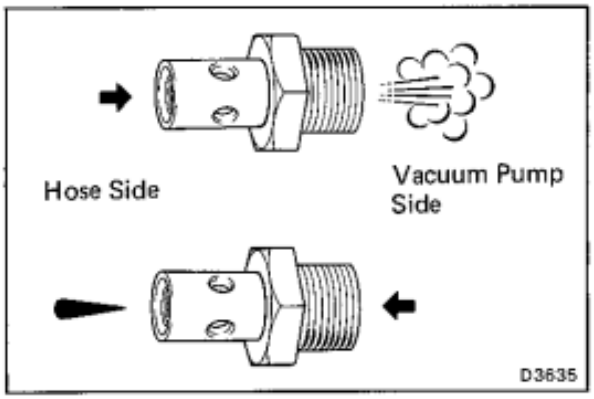

2. INSPECT CHECK VALVE OPERATION

(a) Check that air flows the hose side to the pump side.

(b) Check that air does not flow from the pump side to the hose side.

If necessary, replace the check valve.

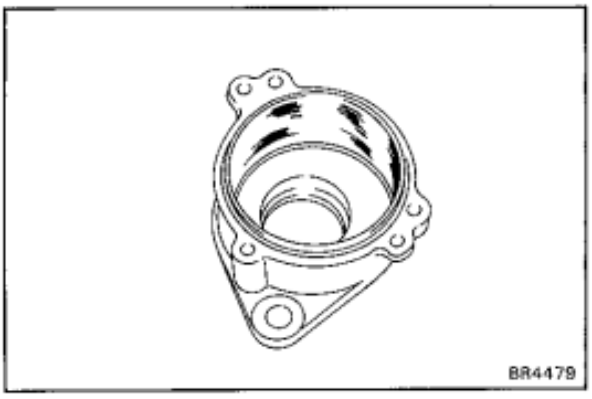

3. INSPECT INSIDE SURFACE OF CASING

Inspect the inside surface of the casing for scoring.

If necessary, replace the vacuum pump assembly.

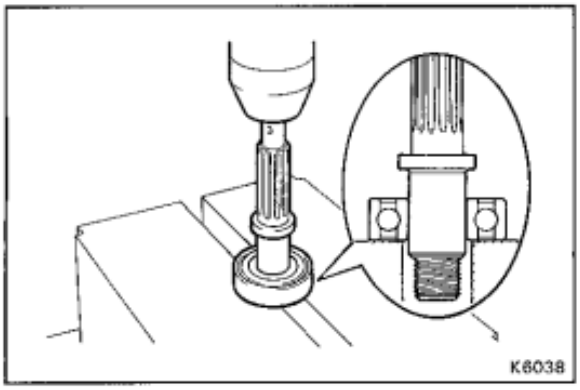

ASSEMBLY OF VACUUM PUMP

(See page BR-49)

1. INSTALL BEARING TO ROTOR SHAFT

Using a press, install the bearing to the rotor shaft.

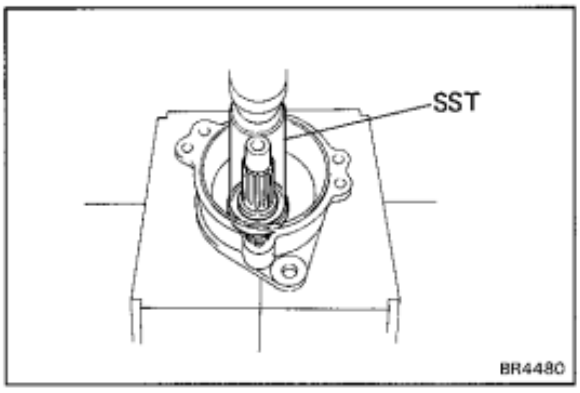

2. INSTALL ROTOR SHAFT

Using SST and press, install the rotor shaft to the casing.

SST 09608-30012 (09608-04030)

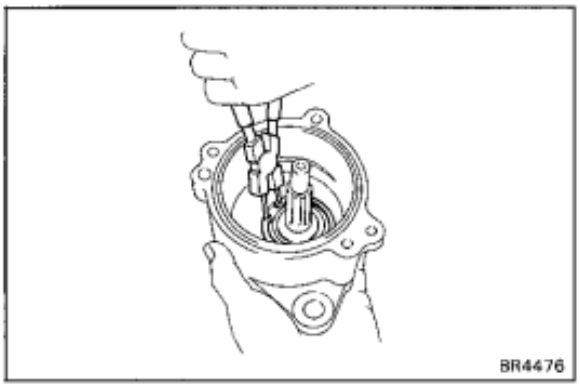

3. INSTALL SNAP RING

Using snap ring pliers, install the snap ring.

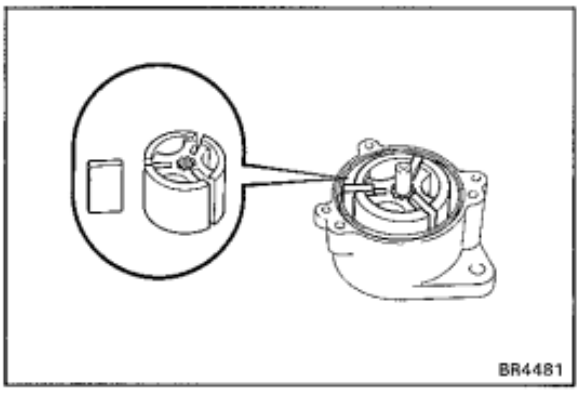

4. INSTALL ROTOR INTO CASING

Apply engine oil to the rotor and install it to the rotor shaft.

5. INSTALL THREE BLADES

(a) Apply engine oil to the blades.

(b) Install the three blades with the round end facing outward.

(c) Be sure that the blades and rotor surfaces are even.

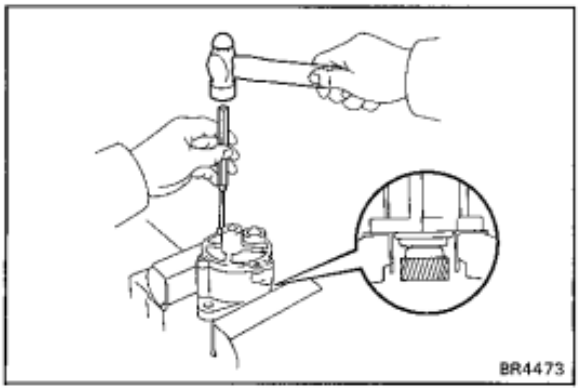

6. INSTALL END COVER

(a) Place the vacuum pump on vise as shown in the illustration.

NOTICE: Do not tighten the vise.

(b) Install the new O-ring.

(c) Install the end cover in place and temporarily install the three bolts.

(d) Using a pin punch and a hammer, drive in the two straight pins.

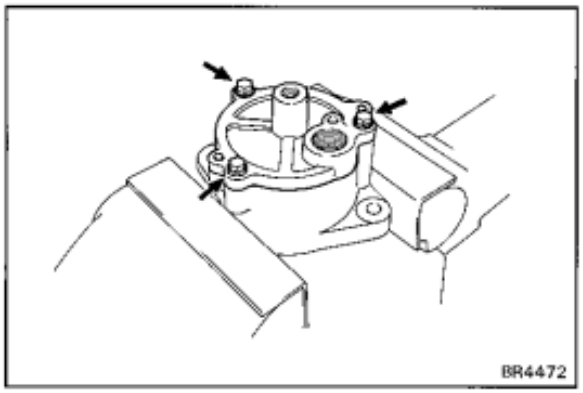

(e) Using soft jaws on the vise, place the vacuum pump in the vise.

NOTICE: Do not tighten the vise too tightly.

(f) Tighten the three bolts.

Torque: 80 kg-cm (69 in.-lb, 7.8 N·m)

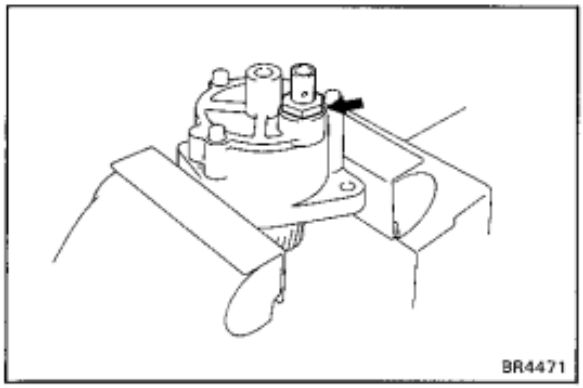

7. INSTALL CHECK VALVE

Install a new gasket and install the check valve.

Torque: 750 kg-cm (54 ft-lb, 74 N·m)

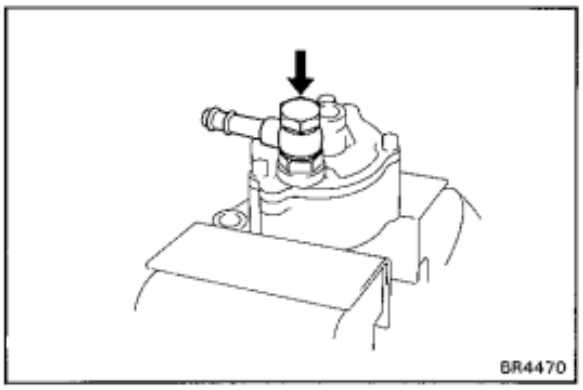

8. INSTALL VACUUM HOSE UNION

Install the vacuum hose union with the two new gaskets and, install and torque the union bolt.

Torque: 140 kg-cm (10 ft-lb, 14 N·m)

HINT: Align and insert the union pin into the matching portion of the casing.

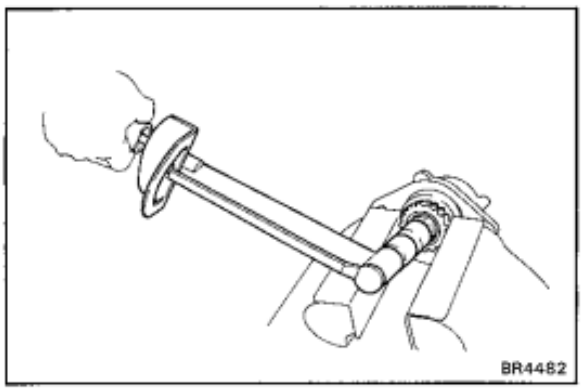

9. INSTALL GEAR

(a) Temporarily install the woodruff key, gear and lock nut to the pump.

(b) Using soft jaws on the vise, clamp the gear in the vise.

(c) Tighten the gear lock nut.

Torque: 1,125 kg-cm (81 ft-lb, 110 N·m)

INSTALLATION OF VACUUM PUMP

INSTALL VACUUM PUMP

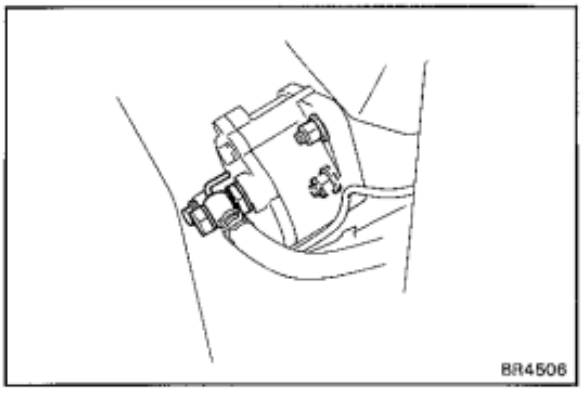

(a) Install the new O-ring to the vacuum pump.

(b) Install the vacuum pump in place and, install and tighten the two bolts.

Torque: 400 kg-cm (29 ft-lb, 39 N·m)

(c) Set the oil tube and new gaskets in place and install the union bolt.

(d) Set the vacuum hose and new gaskets in place and install the union bolt.

(For L Series Engine)

COMPONENTS

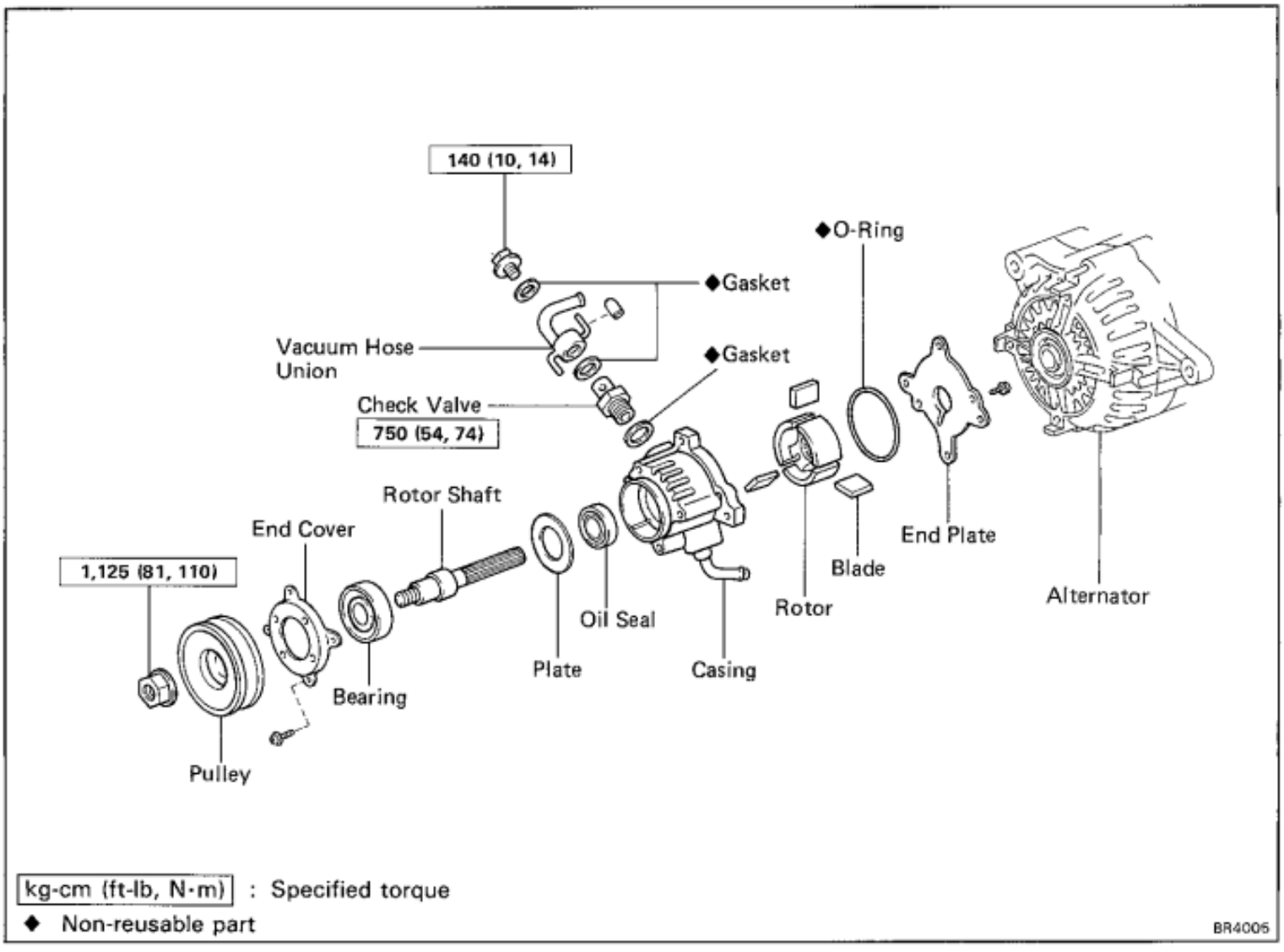

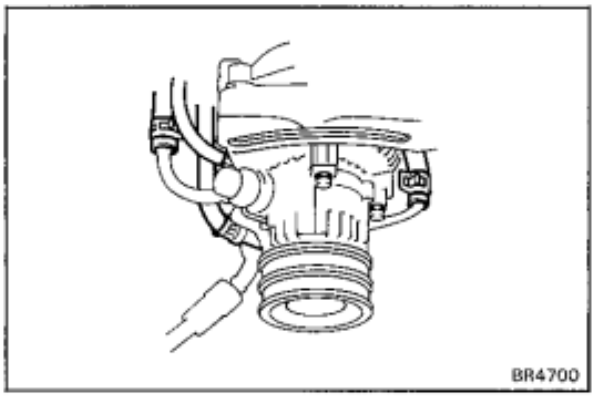

REMOVAL OF VACUUM PUMP

1. DISCONNECT TWO VACUUM HOSES
2. DISCONNECT OIL OUTLET HOSE
3. DISCONNECT INLET TUBE

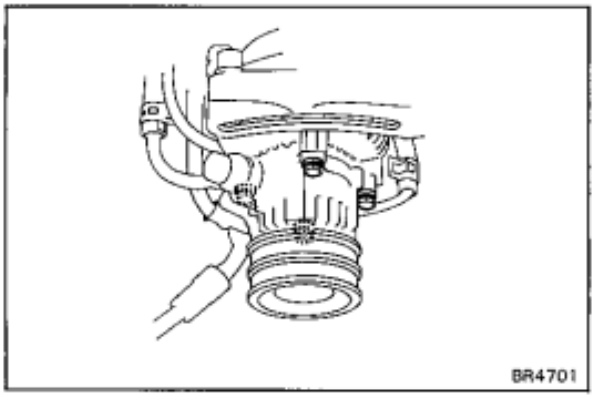

4. REMOVE ALTERNATOR WITH VACUUM PUMP

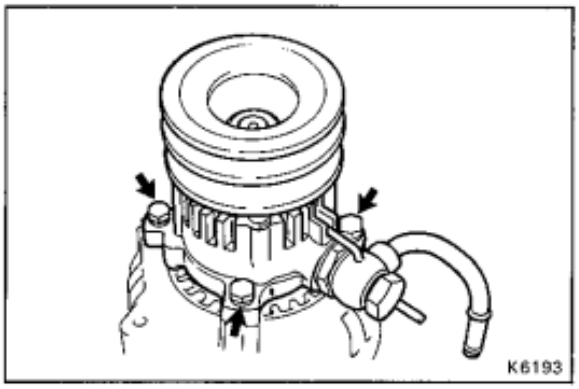

DISASSEMBLY OF VACUUM PUMP

(See page BR-55)

1. REMOVE VACUUM PUMP FROM ALTERNATOR

Remove the four bolts and remove the vacuum pump from the alternator.

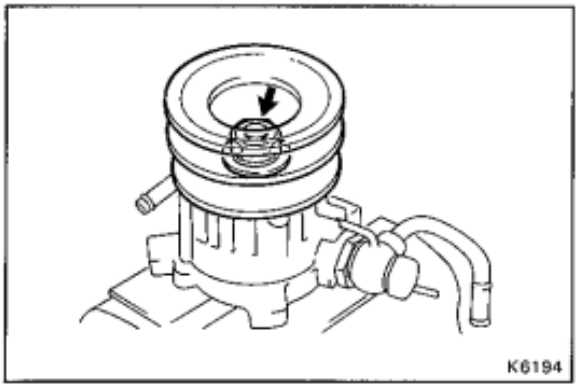

2. REMOVE PULLEY

Using soft jaws on the vise, remove the pulley nut and pulley.

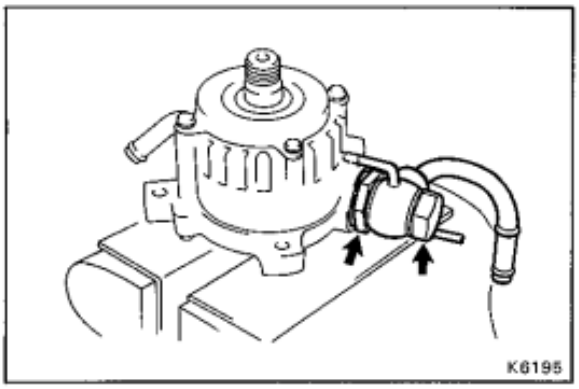

3. REMOVE VACUUM HOSE UNION

Remove the union bolt, union and two gaskets.

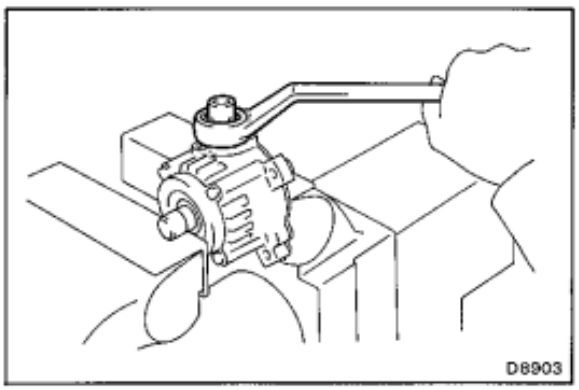

4. REMOVE CHECK VALVE

Remove the check valve and gasket.

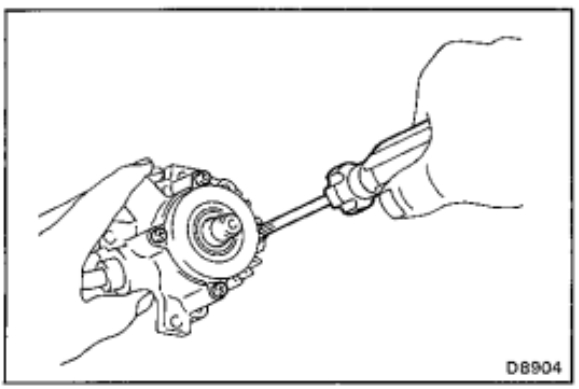

5. REMOVE END COVER

Remove the four screws and end cover.

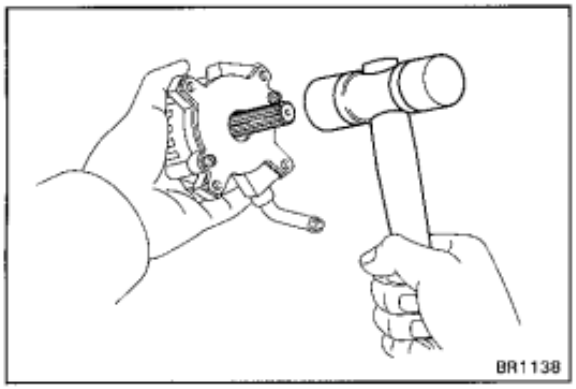

6. REMOVE ROTOR SHAFT WITH BEARING

Using a plastic hammer, tap out the rotor shaft with bearing.

7. REMOVE PLATE

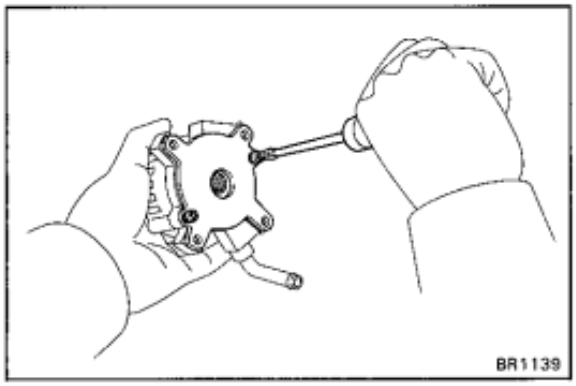

8. REMOVE END PLATE

Remove the two screws and end plate.

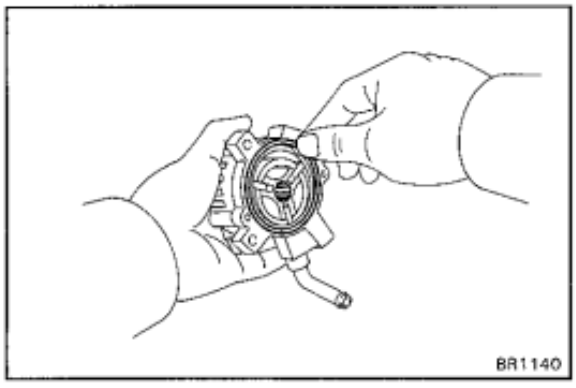

9. REMOVE O-RING

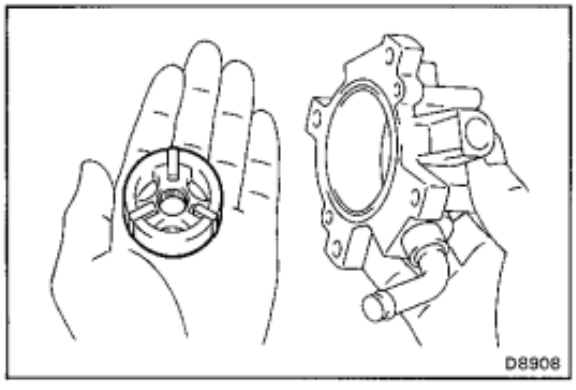

10. REMOVE ROTOR AND BLADES

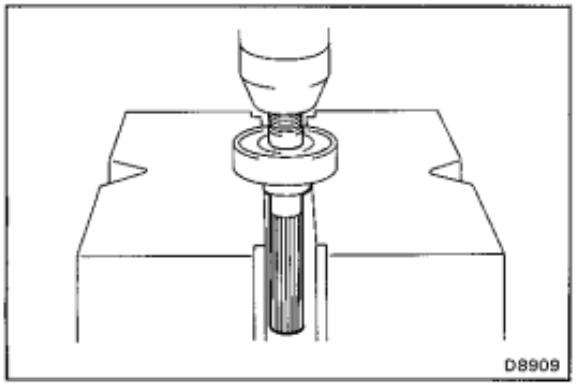

11. IF NECESSARY, REMOVE BEARING

Using a press, remove the bearing from the rotor shaft.

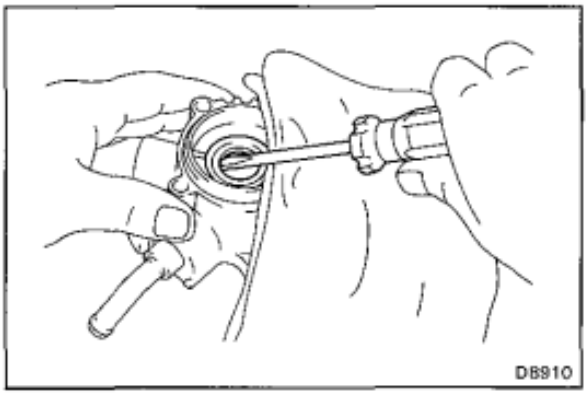

12. REMOVE OIL SEAL

Using a screwdriver, remove the oil seal.

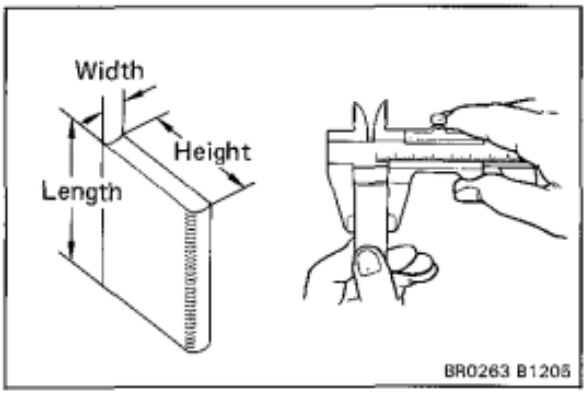

INSPECTION OF VACUUM PUMP

1. INSPECT BLADE

(a) Check the blades for wear or damage.

(b) Using calipers, measure the height, width and length of the blades.

Minimum height: 12.2 mm (0.480 in.)

Minimum width: 3.96 mm (0.1559 in.)

Minimum length: 22.98 mm (0.4047 in.)

If necessary, replace the blade.

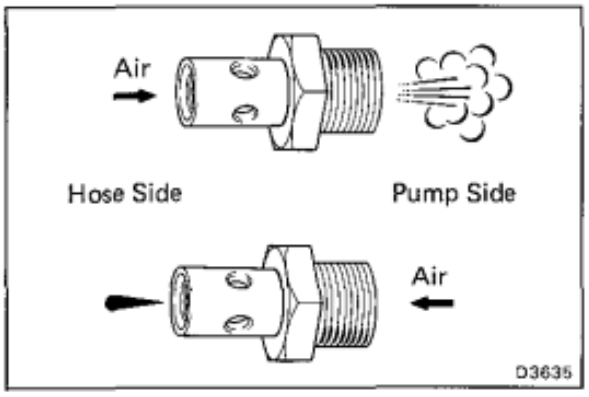

2. INSPECT CHECK VALVE OPERATION

(a) Check that air flows from the hose side to the pump side.

(b) Check that air does not flow from the pump side to the hose side.

If necessary, replace the check valve.

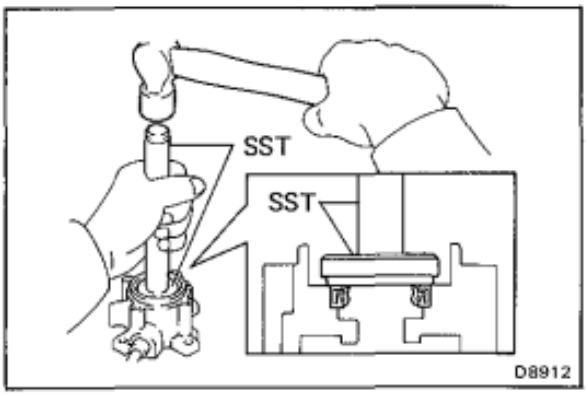

ASSEMBLY OF VACUUM PUMP

(See page BR-55)

1. INSTALL OIL SEAL

Using SST, tap in the oil seal.

SST 09608-20012 (09608-00040, 09608-03020)

2. INSTALL PLATE

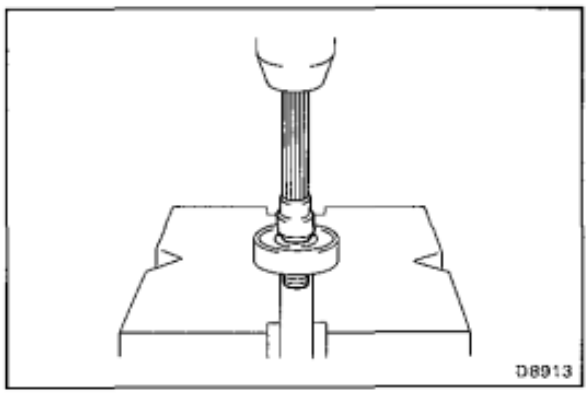

3. INSTALL BEARING

Using a press, install the bearing to the rotor shaft.

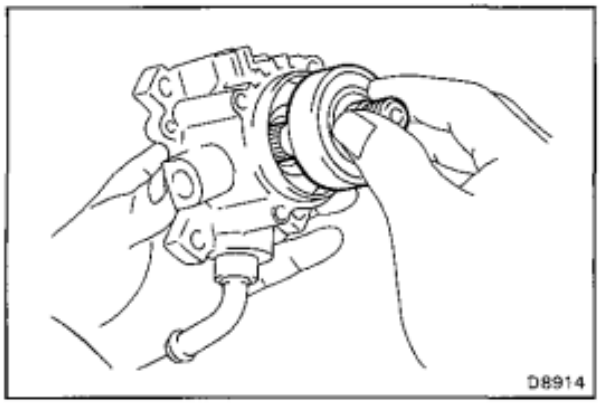

4. INSTALL ROTOR SHAFT WITH BEARING

Install the rotor shaft with the bearing to the casing.

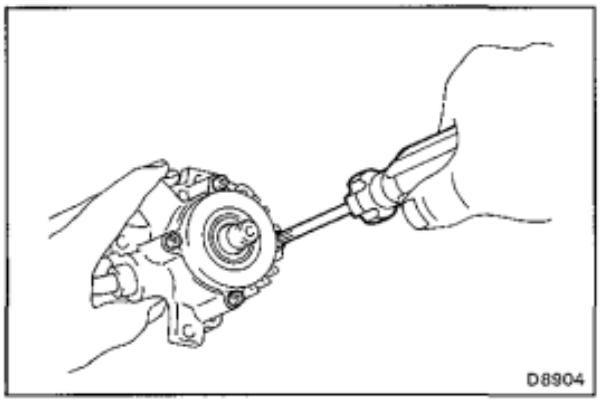

5. INSTALL END COVER

Install the end cover with the four screws.

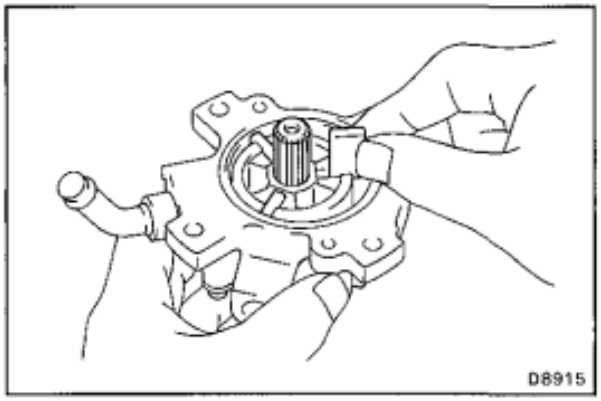

6. INSTALL ROTOR AND BLADES INTO CASING

(a) Install the rotor into the casing.

(b) Install the blades with the round end facing outward.

(c) Be sure that the blades and rotor surfaces are even.

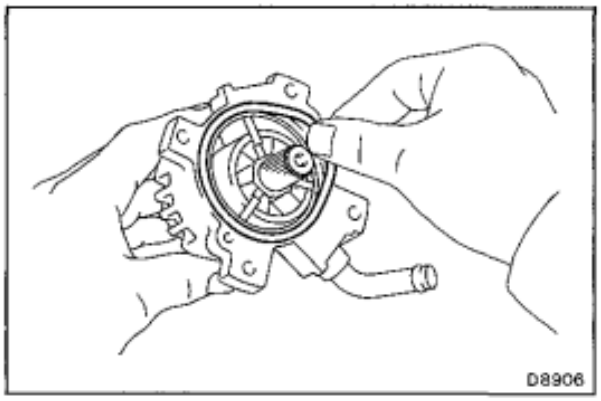

7. *INSTALL NEW O-RING*

Install a new O-ring into the groove of the casing.

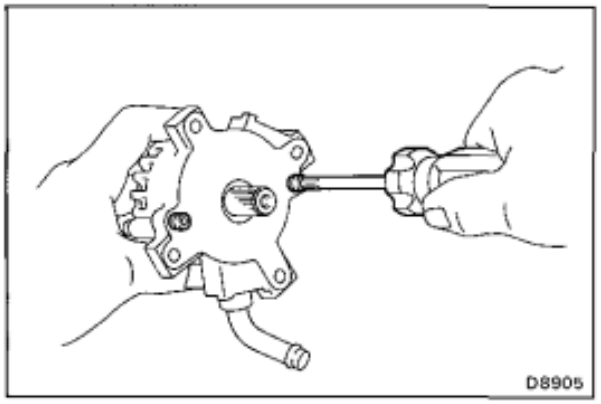

8. INSTALL END PLATE

Install the end plate with the two screws.

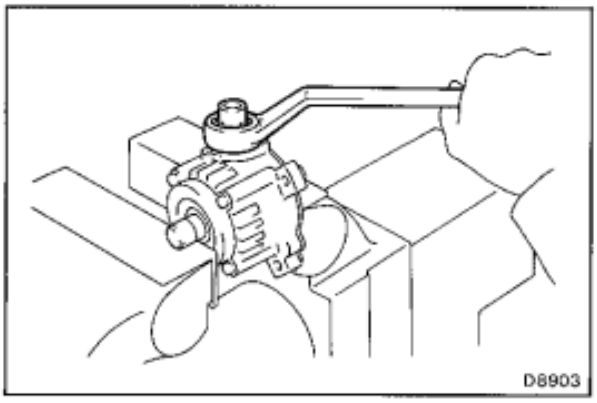

9. INSTALL CHECK VALVE

Install the check valve with a new gasket.

Torque: 750 kg-cm (54 ft-lb, 74 N·m)

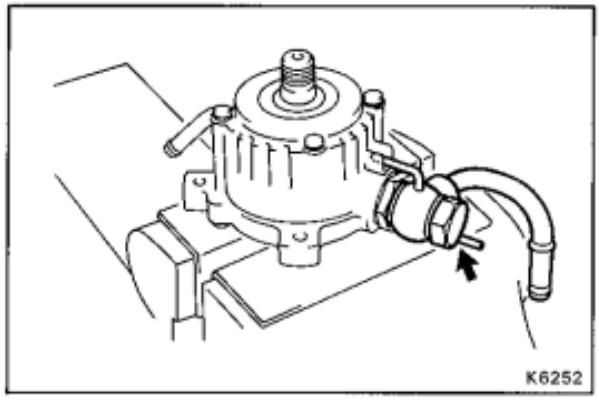

10. INSTALL VACUUM HOSE UNION

Install the vacuum hose union with the two new gaskets, and install and torque the union bolt.

Torque: 140 kg-cm (10 ft-lb, 14 N·m)

HINT: Align and insert the union pin into the matching hole of the casing.

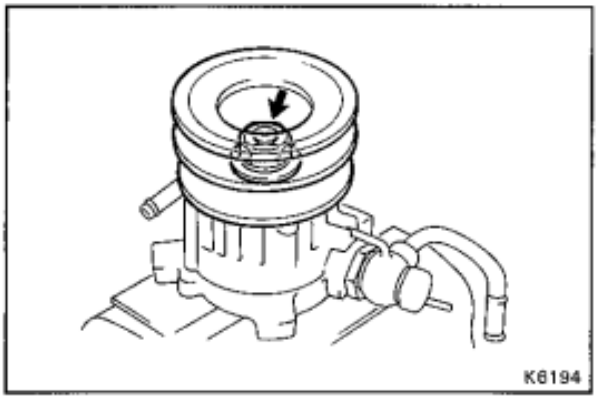

11. INSTALL PULLEY

Using soft jaws on the vise, install the pulley to the vacuum pump and torque the lock nut.

Torque: 1,125 kg-cm (81 ft-lb, 110 N·m)

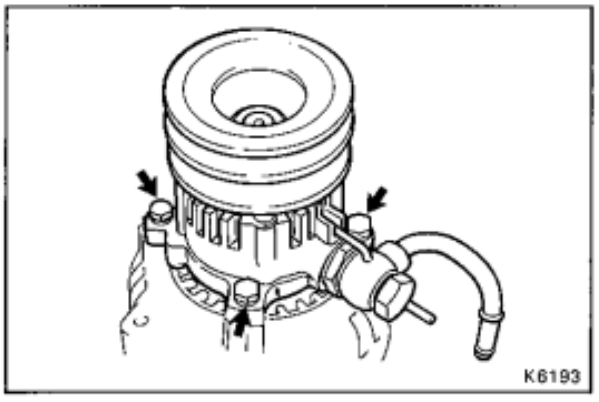

12. INSTALL VACUUM PUMP TO ALTERNATOR

Install the vacuum pump to the alternator with the four bolts.

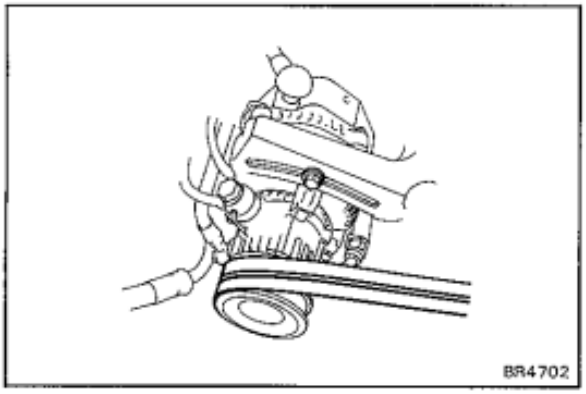

INSTALLATION OF VACUUM PUMP

1. **INSTALL ALTERNATOR WITH VACUUM PUMP**

   Install the alternator with the vacuum pump in place and adjust the belt tension.

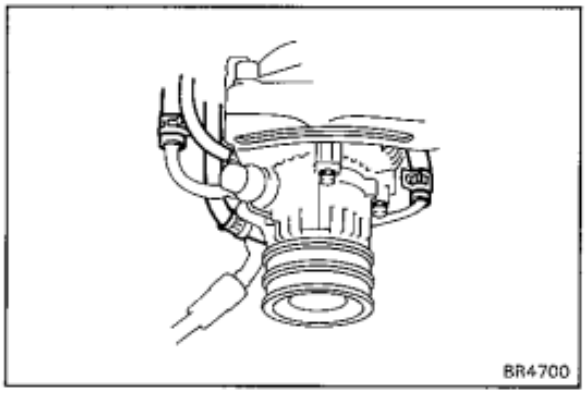

2. **CONNECT OIL INLET TUBE**
3. **CONNECT OIL OUTLET HOSE**
4. **CONNECT TWO VACUUM HOSES**

FRONT BRAKE

Drum Brake

COMPONENTS

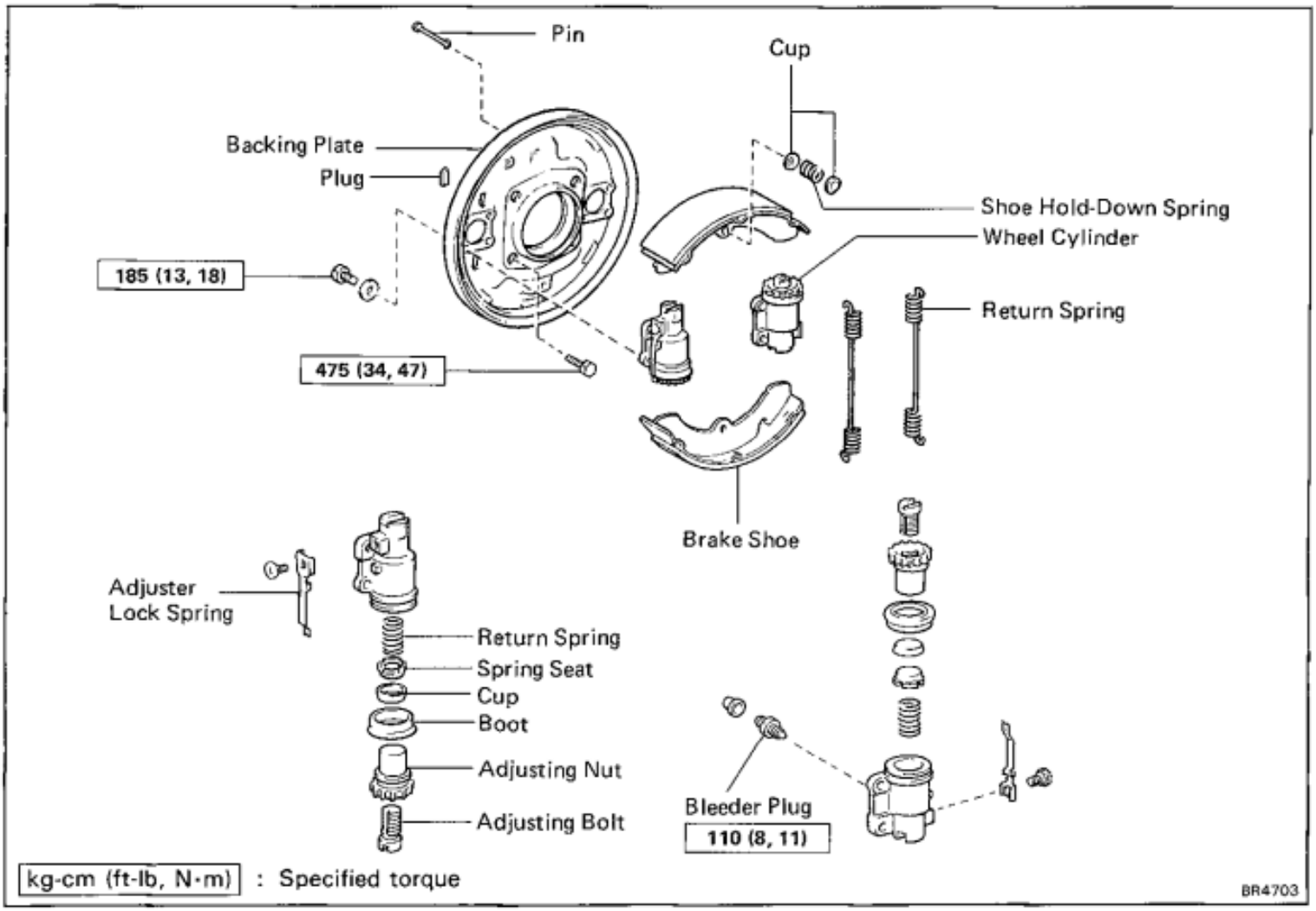

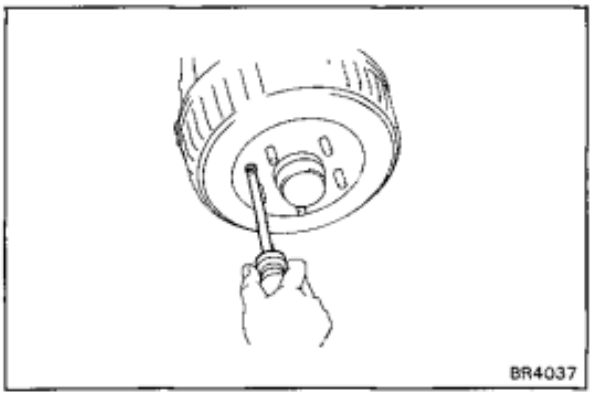

REMOVAL OF FRONT BRAKE

1. **REMOVE FRONT WHEEL**
2. **REMOVE BRAKE DRUM**

   Remove the screw and brake drum.

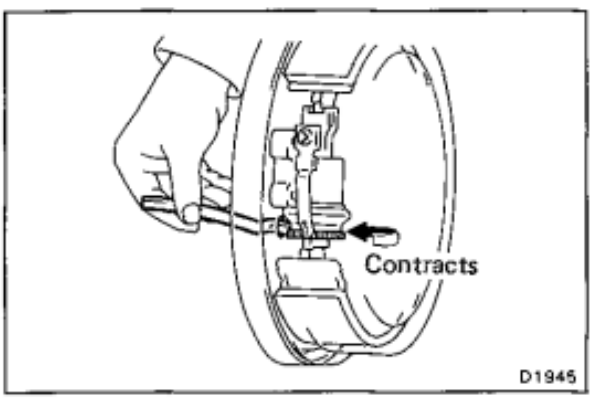

HINT: If the brake drum can not be removed easily, remove the plug in the backing plate and insert a screwdriver through the hole, and reduce the brake shoe adjustment by turning the adjusting nut.

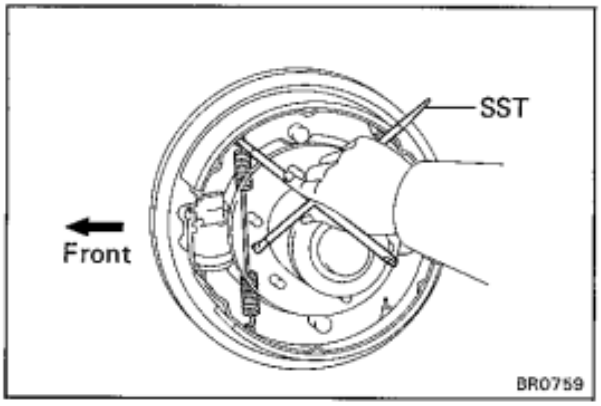

3. REMOVE FRONT SIDE RETURN SPRING

Using SST, remove the front side return spring.

SST 09703-30010

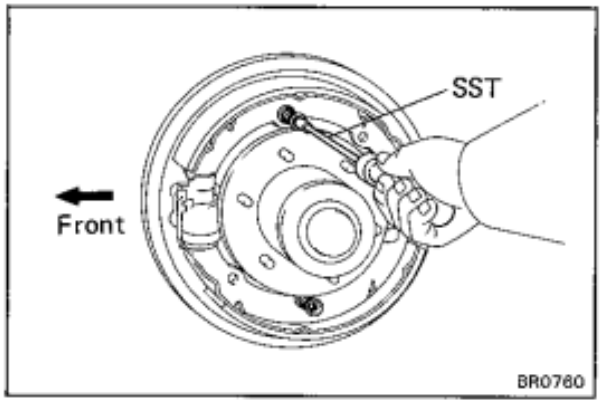

4. REMOVE BRAKE SHOES

Using SST, remove the springs, cups and pins.

SST 09718-00010

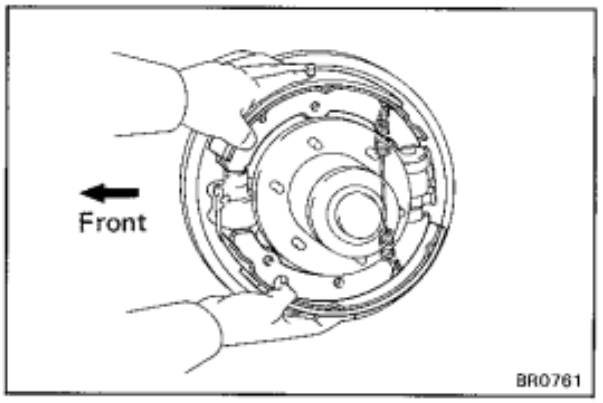

5. REMOVE BRAKE SHOES AND REAR SIDE RETURN SPRING

Slide the shoes and remove them together with the rear side return spring.

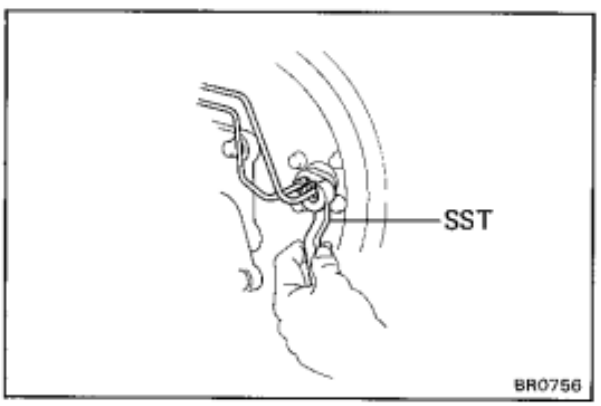

6. IF NECESSARY, REMOVE WHEEL CYLINDER

(a) Remove the brake tube clamp.

(b) Using SST, disconnect the brake tubes from the wheel cylinder.

SST 09751-36011

HINT: Use a container to catch the brake fluid.

(c) Remove the bleeder plug from the rear wheel cylinder.

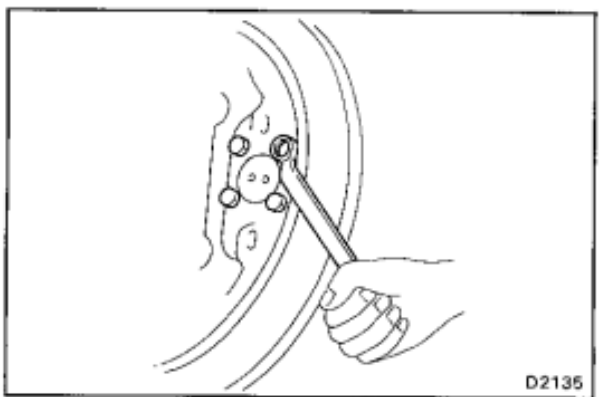

(d) Remove the four bolts and the wheel cylinder.

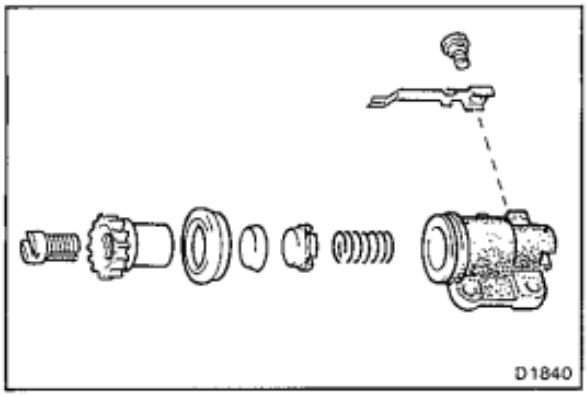

7. IF NECESSARY, DISASSEMBLE WHEEL CYLINDER

(a) Remove the following parts from the wheel cylinder.

- Adjusting bolt and nut
- Boot
- Cup
- Spring seat
- Return spring

(b) Remove the screw and adjuster lock spring.

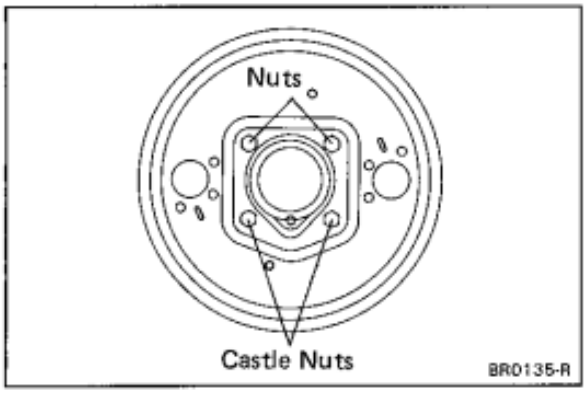

8. IF NECESSARY, REMOVE BACKING PLATE

(a) Remove the front axle hub.
(See page SA-36)

(b) Remove the brake tube clamp from the backing plate and remove the backing plate.

INSPECTION AND REPAIR OF FRONT BRAKE COMPONENTS

1. INSPECT DISASSEMBLED PARTS

Inspect the disassembled parts for wear, rust or damage.

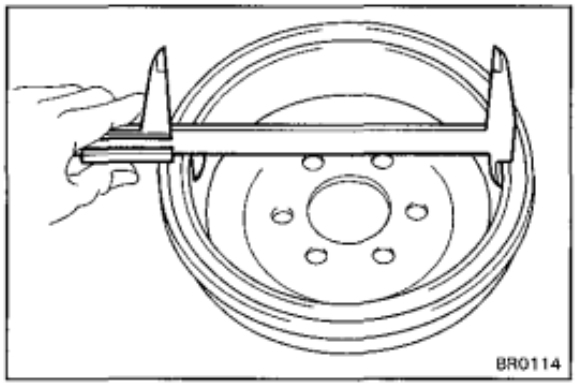

2. INSPECT BRAKE DRUM INSIDE DIAMETER

Maximum inside diameter

Heavy-Duty: 297.0 mm (11.693 in.)
Light-Duty: 281.4 mm (11.079 in.)

Standard inside diameter

Heavy-Duty: 295.0 mm (11.614 in.)
Light-Duty: 279.4 mm (11.000 in.)

If the drum is scored or worn, the brake drum may be lathed.

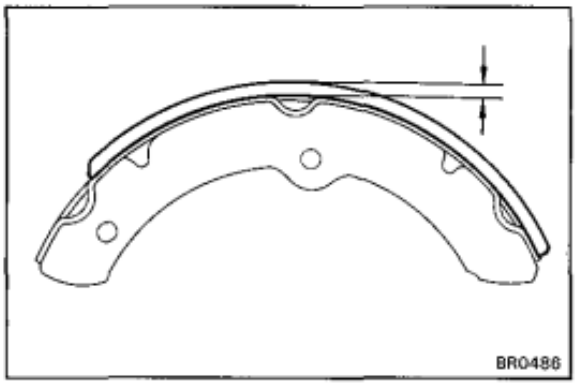

3. INSPECT BRAKE SHOE LINING THICKNESS

Minimum thickness:

Heavy-Duty: 1.5 mm (0.059 in.)
Light-Duty: 1.0 mm (0.039 in.)

Standard thickness:

Heavy-Duty: 6.5 mm (0.256 in.)
Light-Duty: 6.0 mm (0.236 in.)

If the shoe lining is less than minimum or shows signs of uneven wear, replace the brake shoes.

HINT: If any of the brake shoes have to be replaced, replace all of the front brake shoes in order to maintain even braking.

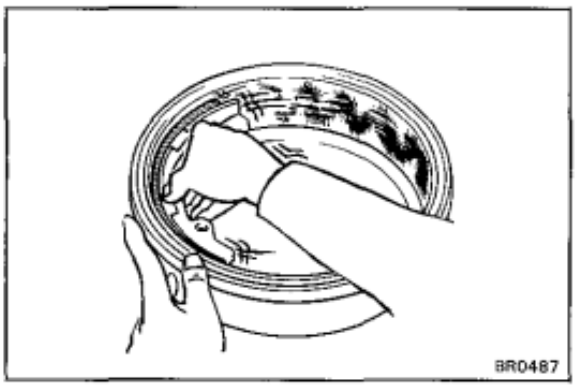

4. INSPECT BRAKE LINING AND DRUM FOR PROPER CONTACT

If the contact between the brake lining and drum is improper, repair the lining with a shoe grinder, or replace the brake shoe assembly.

ASSEMBLY OF FRONT BRAKE

(See page BR-62)

HINT: Assemble the parts in the correct direction as shown below.

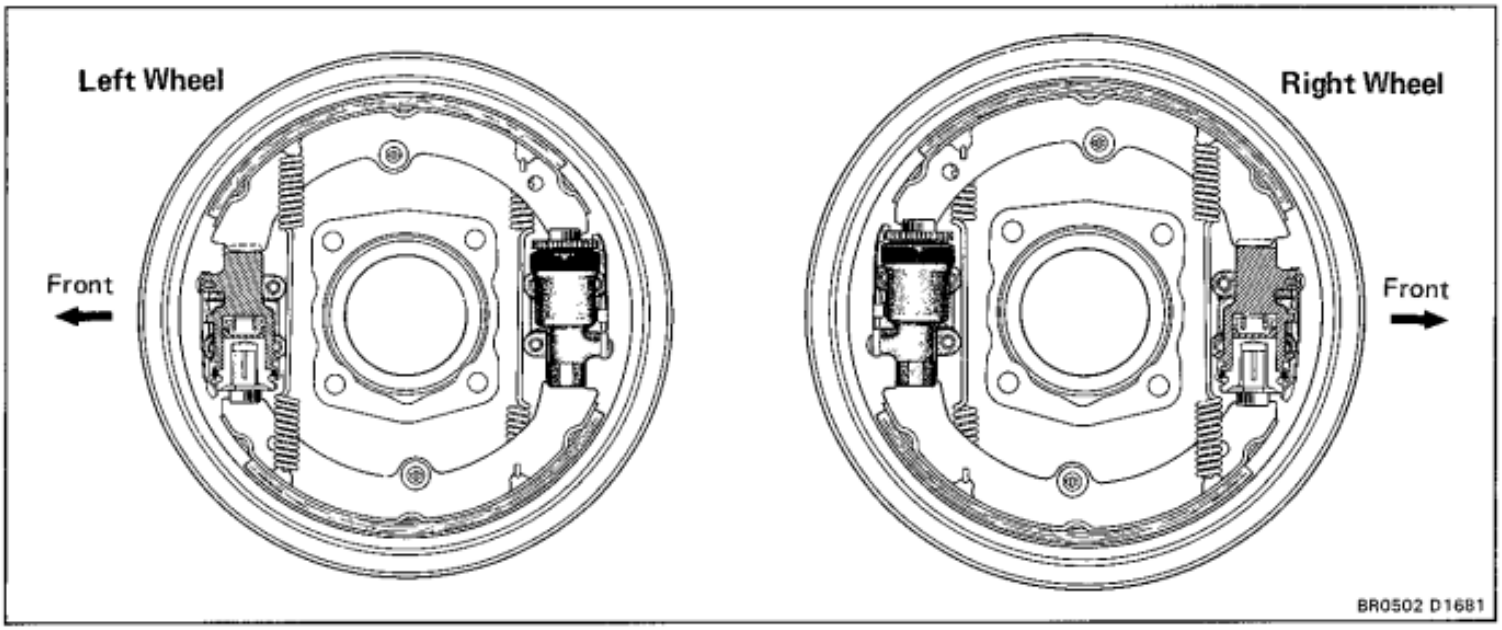

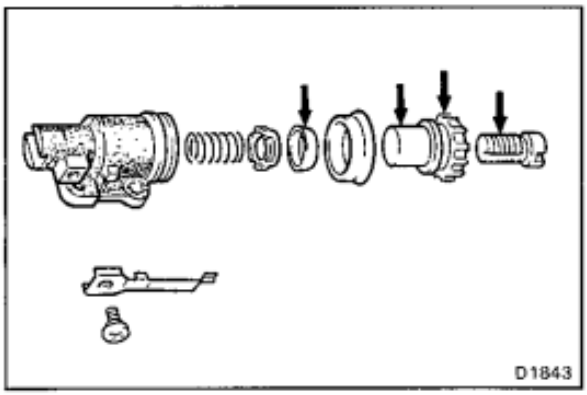

1. ASSEMBLE WHEEL CYLINDER

(a) Apply lithium soap base glycol grease to parts as shown.

(b) Assemble the wheel cylinder.

HINT: Install in proper direction only.

- Return spring
- Spring seat
- Cup
- Boot

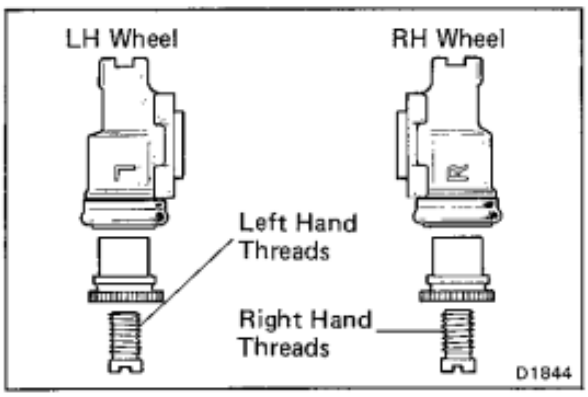

(c) Install the adjusting bolt and nut to the wheel cylinder. There are two kinds of adjusting nuts and bolts. Use each at the proper location.

RH wheel cylinder—Right-hand threads
(R mark) (Yellow color)

LH wheel cylinder—Left-hand threads
(L mark) (White color)

(d) Install the adjusting lock spring with the screw.

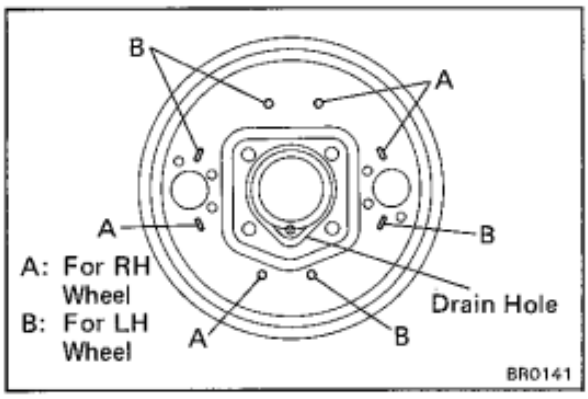

2. INSTALL BACKING PLATE TO STEERING KNUCKLE

(a) Install the backing plate with the nuts and tighten the nuts.

Torque: 475 kg-cm (34 ft-lb, 47 N·m)

(b) Install the front axle hub.
(See page SA-48)

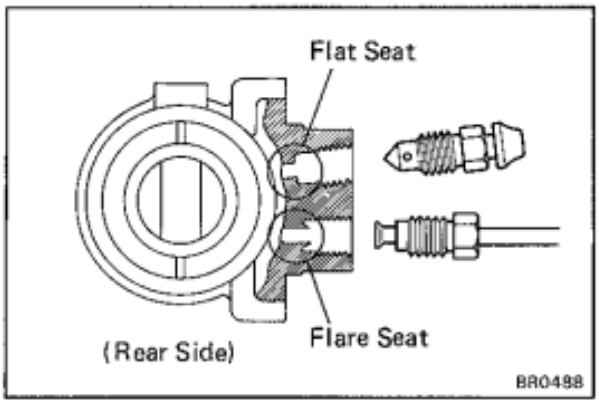

3. INSTALL BLEEDER PLUG

HINT:

- Rear wheel cylinder union seats are flat and flare shaped as shown.
- Both union seats of front wheel cylinder are flat.

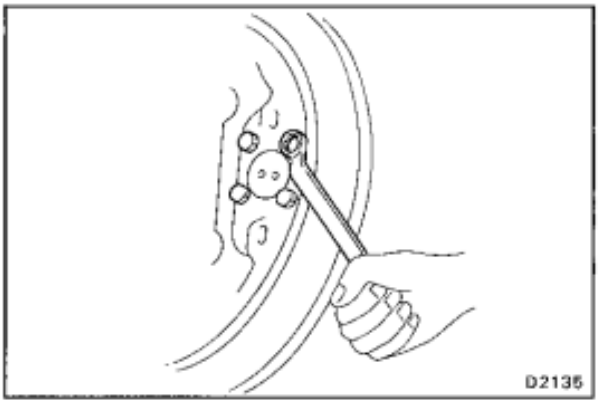

4. INSTALL WHEEL CYLINDER TO BACKING PLATE

(a) Install the front wheel cylinder with the adjuster facing downward.
(See page BR-62)

(b) Install the rear wheel cylinder with the adjuster facing upward.
(See page BR-62)

(c) Tighten the mounting bolts of the wheel cylinders.

Torque: 185 kg-cm (13 ft-lb, 18 N·m)

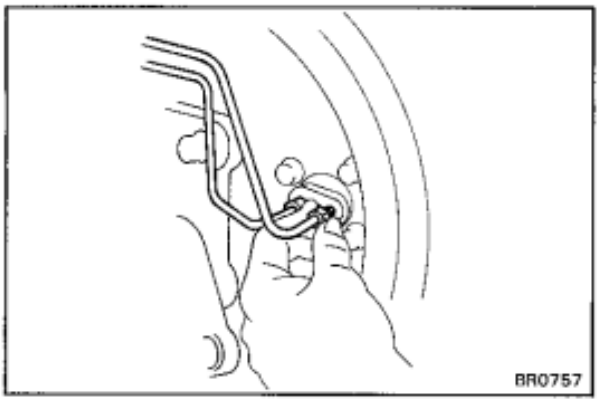

5. INSTALL BRAKE TUBE TO WHEEL CYLINDER

(a) Install the brake tube in place and tighten the nuts by finger, then tighten them with SST.

SST 09751-36011

Torque: 155 kg-cm (11 ft-lb, 15 N·m)

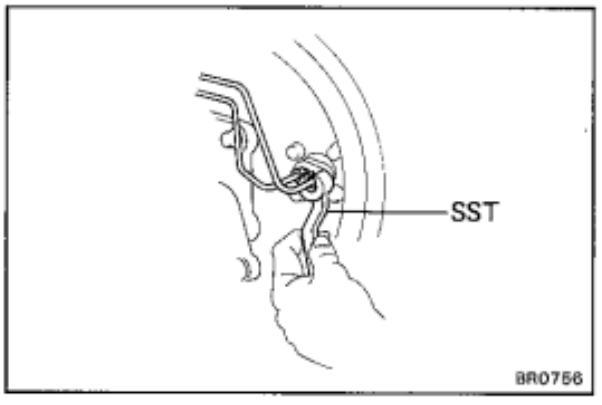

(b) Similarly, connect the brake tube from the vehicle to the wheel cylinder with SST.

SST 09751-36011

Torque: 155 kg-cm (11 ft-lb, 15 N·m)

6. INSTALL BRAKE TUBE CLAMP TO BACKING PLATE

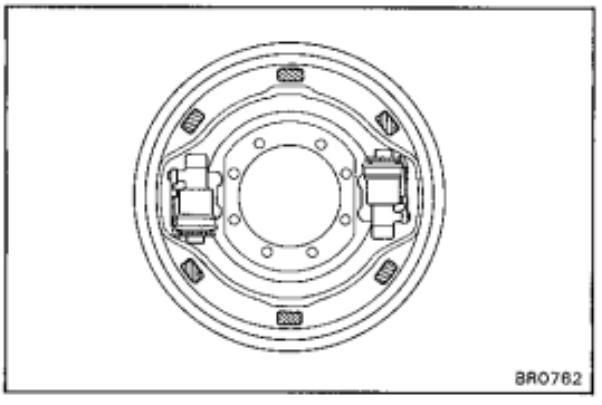

7. INSTALL BRAKE SHOES

(a) Apply high temperature grease to the brake shoe contact surfaces as shown.

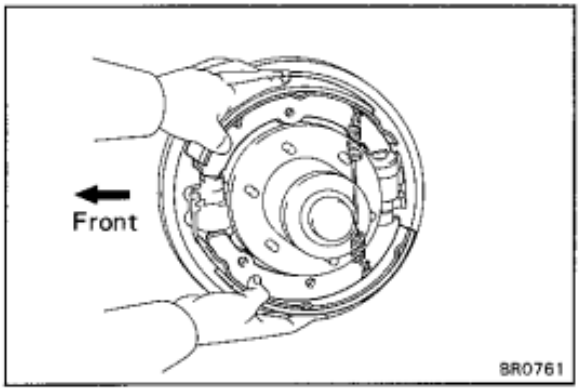

(b) Hook the return spring to the brake shoe rear inner side.

(c) Install the brake shoes assembly.

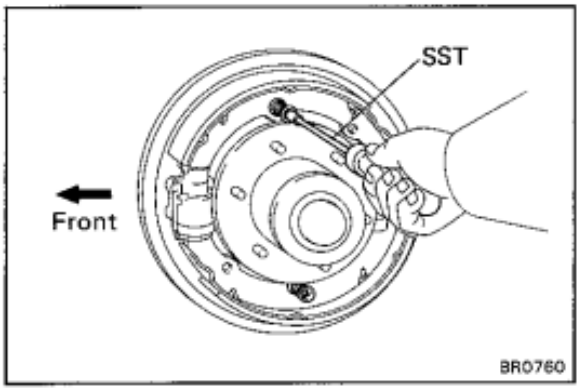

(d) Using SST, install the shoe hold-down spring, two cups and pin.

SST 09718-00010

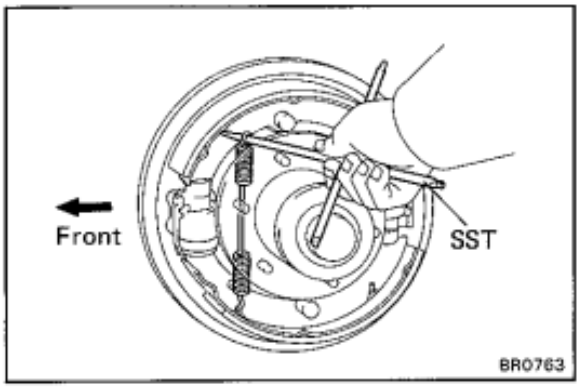

(e) Using SST, install the other side return spring.

SST 09703-30010

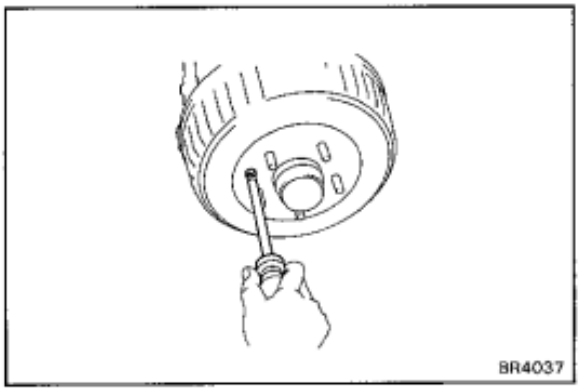

8. INSTALL BRAKE DRUM

Install the brake drum and install the screw.

9. FILL BRAKE RESERVOIR WITH BRAKE FLUID AND BLEED BRAKE SYSTEM
(See page BR-7)

10. CHECK FOR FLUID LEAKAGE

11. ADJUST BRAKE SHOE CLEARANCE
(See page BR-8)

12. INSTALL FRONT WHEEL

Disc Brake

COMPONENTS

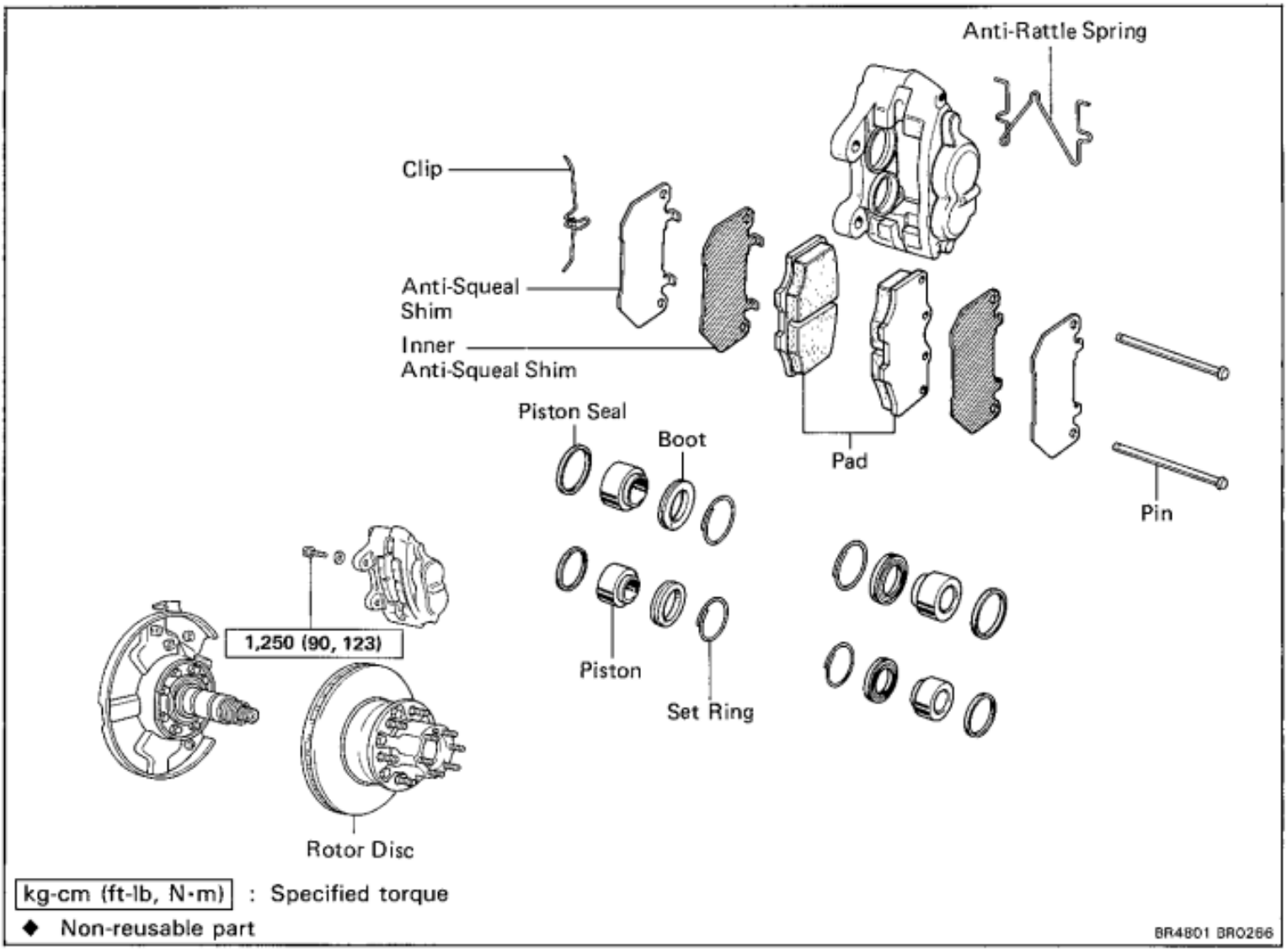

kg-cm (ft-lb, N·m) : Specified torque

◆ Non-reusable part

BR4801 BR0266

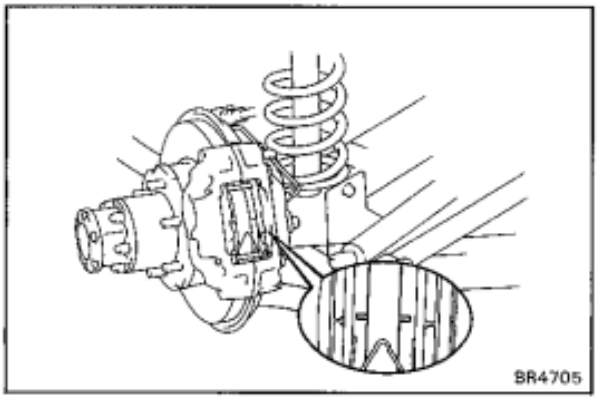

REPLACEMENT OF BRAKE PADS

1. **REMOVE FRONT WHEEL**

2. **INSPECT PAD LINING THICKNESS**

   Check the pad thickness through the cylinder inspection hole and replace pads if not within specification.

   Minimum thickness

   Except Australia: 1.0 mm (0.039 in.)
   Australia: 4.0 mm (0.157 in.)

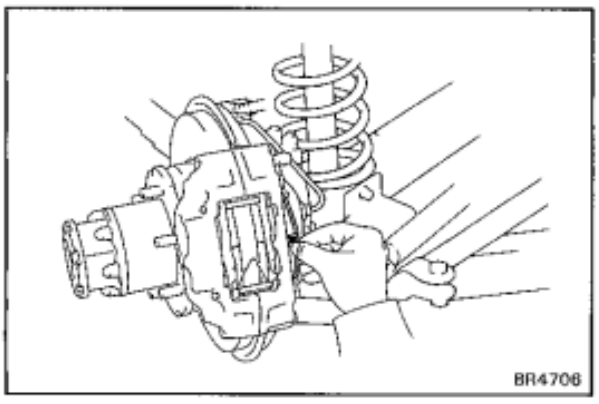

3. **REMOVE FOLLOWING PARTS**

   (a) Anti-rattle clip

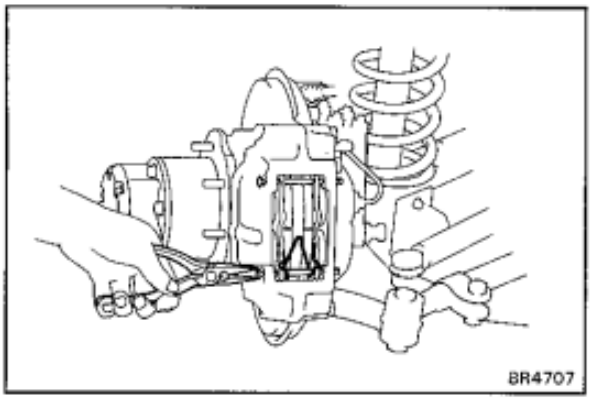

(b) Two pins

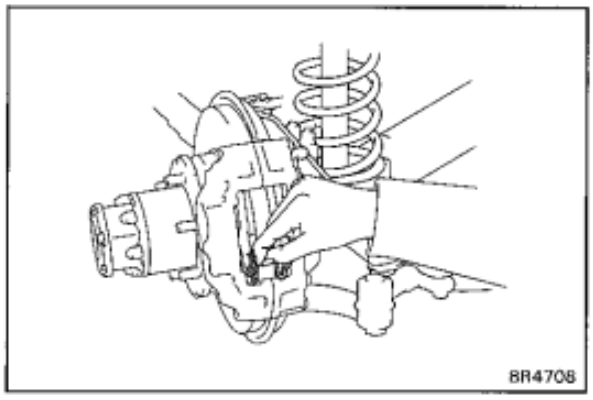

(c) Anti-rattle spring

(d) Two pads

(e) Four anti-squeal shims

4. CHECK ROTOR DISC THICKNESS
(See page BR-73)

5. CHECK ROTOR DISC RUNOUT
(See page BR-73)

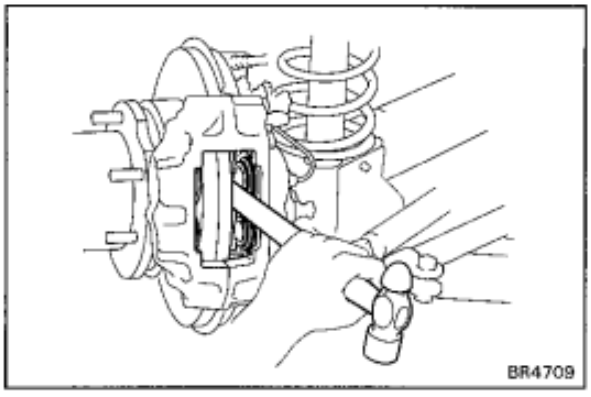

6. INSTALL NEW PADS

(a) Draw out a small amount of brake fluid from the reservoir.

(b) Press in the piston with a hammer handle or an equivalent.

HINT: Always change the pad on one wheel at a time as there is possibility of the opposite piston flying out.

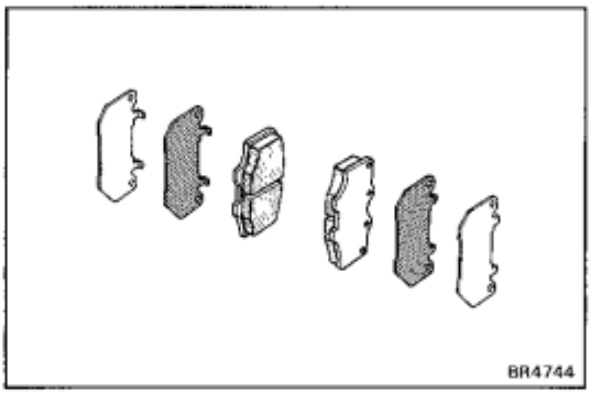

(c) Install the four anti-squeal shims to new pads as shown.

(d) Install the new pads into the cylinder.

NOTICE: Do not allow oil or grease to get on the rubbing face.

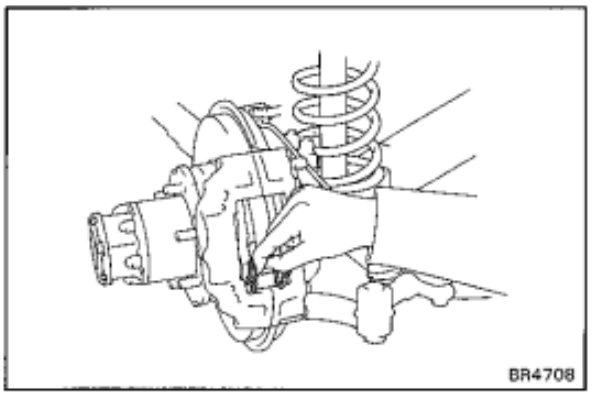

7. INSTALL ANTI-RATTLE SPRING

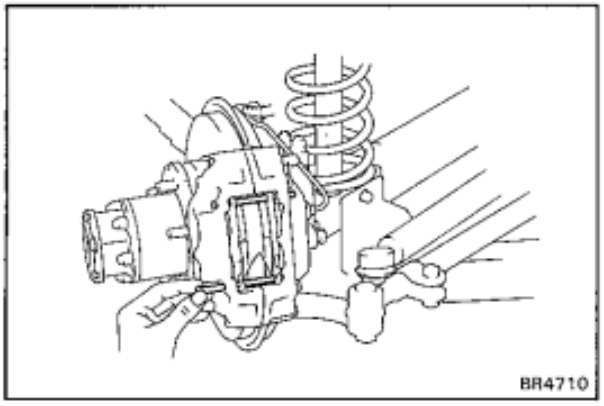

8. **INSTALL TWO PINS**

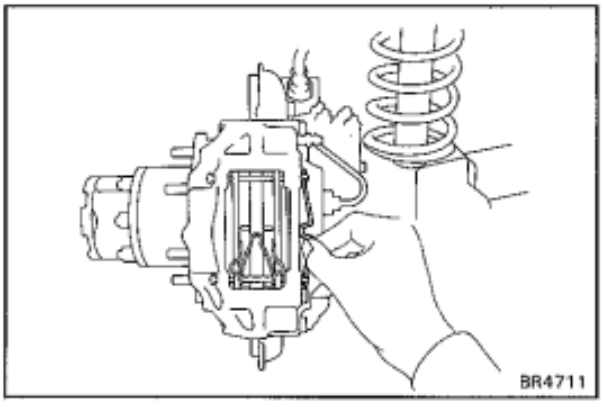

9. **INSTALL ANTI-RATTLE CLIP**

REMOVAL OF CYLINDER

(See page BR-69)

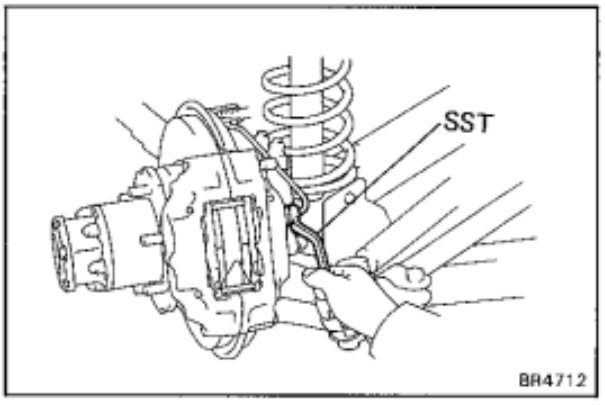

1. **REMOVE FRONT WHEEL**

2. **DISCONNECT BRAKE TUBE**

   Using SST, disconnect the brake tube.

   Use a container to catch the brake fluid.

   SST 09751-36011

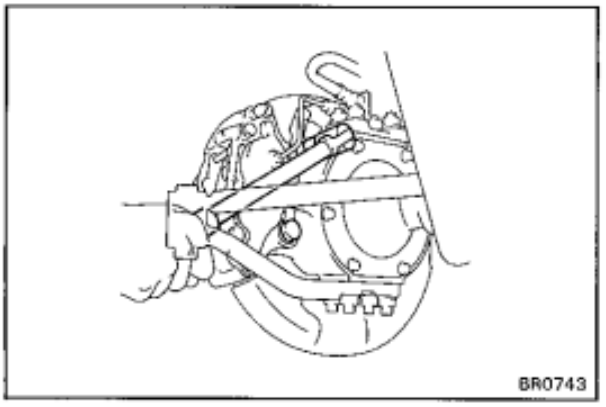

3. **REMOVE CYLINDER**

   Remove the two mounting bolts and cylinder.

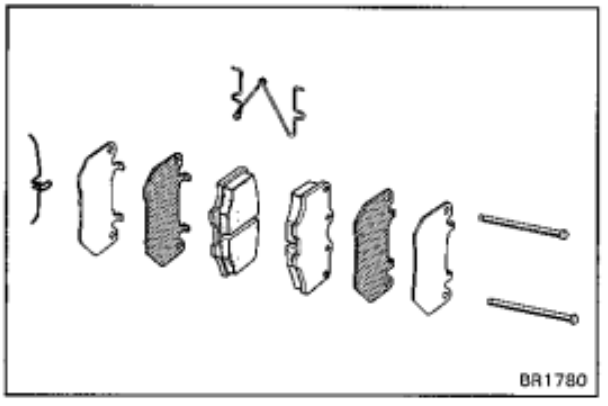

4. **REMOVE FOLLOWING PARTS**

   (a) Anti-rattle clip

   (b) Two pins

   (c) Anti-rattle spring

   (d) Two pads

   (e) Four anti-squeal shims

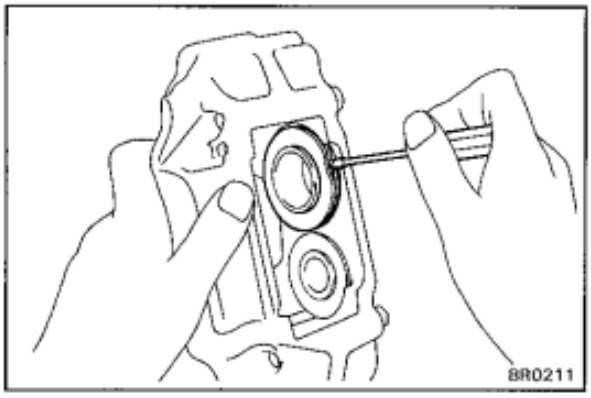

DISASSEMBLY OF CYLINDER

1. REMOVE CYLINDER BOOT SET RINGS AND BOOTS

Using a screwdriver, remove the cylinder boot set rings and boots.

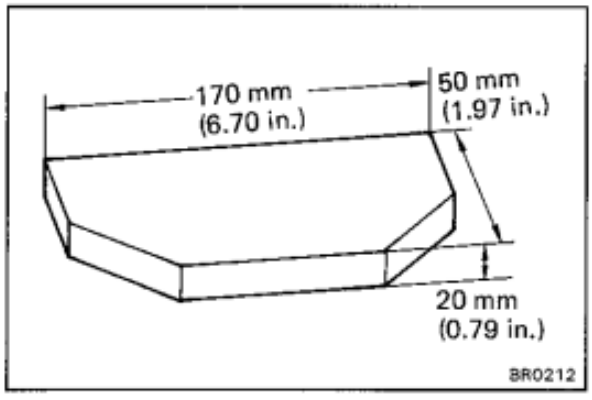

2. REMOVE PISTON FROM CYLINDER

(a) Prepare the wooden plate as shown in the illustration to hold the piston.

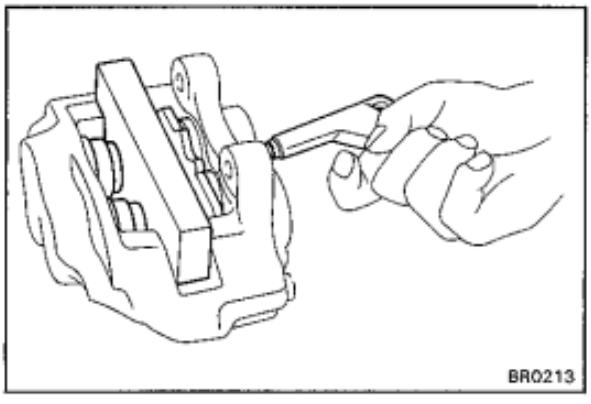

(b) Place the plate between the pistons and insert a pad at one side.

(c) Use compressed air to remove the pistons alternately from the cylinder.

CAUTION: Do not place your fingers in front of the piston when using compressed air.

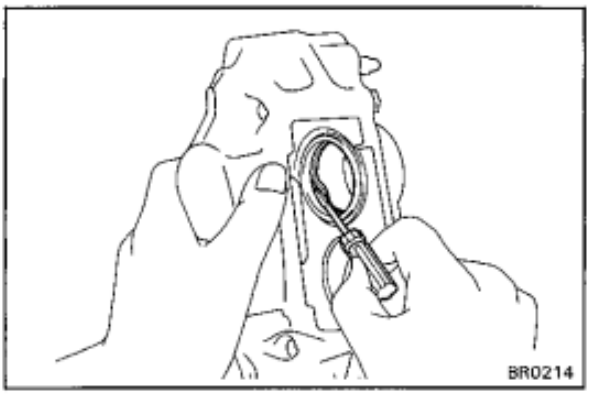

3. REMOVE PISTON SEALS

Using a screwdriver, remove the seals from the cylinder.

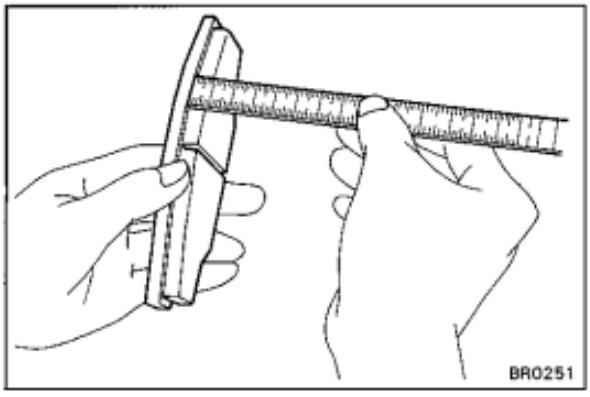

INSPECTION AND REPAIR OF FRONT BRAKE COMPONENTS

1. MEASURE PAD LINING THICKNESS

Minimum thickness:

Except Australia:	**1.0 mm (0.039 in.)**
Australia:	**4.0 mm (0.157 in.)**

Standard thickness: **9.5 mm (0.374 in.)**

Replace the pad if the thickness is less than the minimum (the 1.0 mm slit is no longer visible) or if it shows signs of uneven wear.

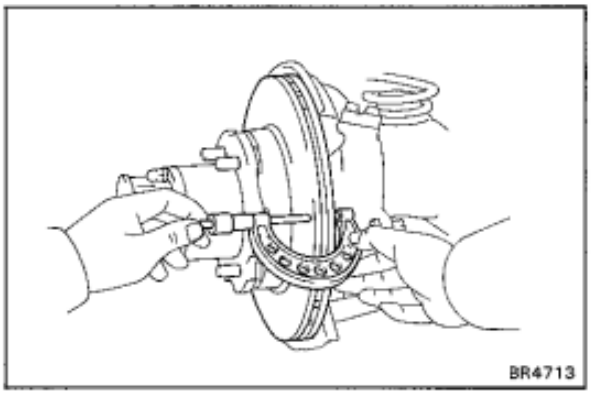

2. MEASURE ROTOR DISC THICKNESS

Minimum thickness:

Light-Duty Rear Drum:	**11.5 mm (0.453 in.)**
Except above model:	**18.0 mm (0.709 in.)**

Standard thickness:

Light-Duty Rear Drum:	**12.5 mm (0.492 in.)**
Except above model:	**20.0 mm (0.787 in.)**

If the disc is scored or worn, or if its thickness is less than minimum, repair or replace.

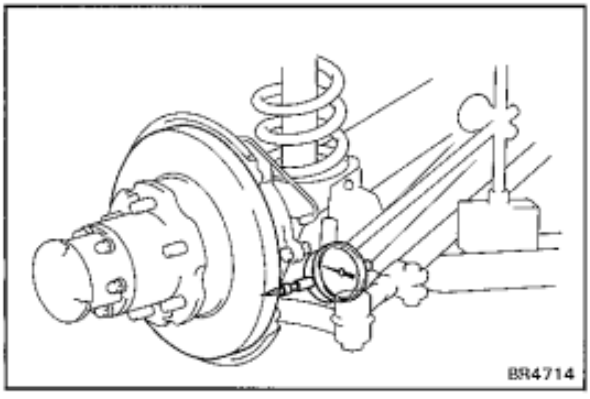

3. MEASURE ROTOR DISC RUNOUT

Measure the rotor disc runout at 10 mm (0.39 in.) from the outer edge of the rotor disc.

Maximum disc runout: 0.15 mm (0.0059 in.)

If the runout is greater than the maximum, replace the disc.

HINT: Before measuring the runout, confirm that the front bearing play is within specification.

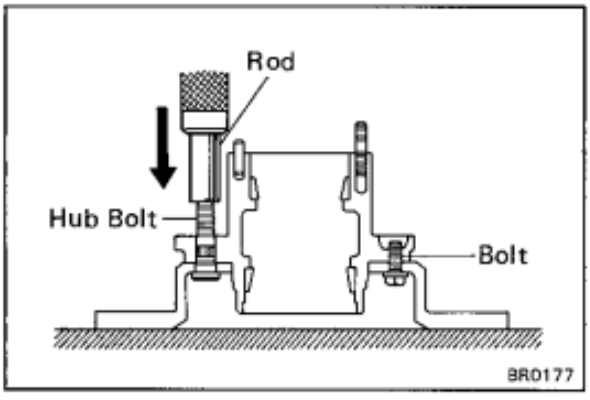

4. IF NECESSARY, REPLACE ROTOR DISC

(a) Remove the axle hub.

(b) Using rod, press the hub bolts out of the axle hub.

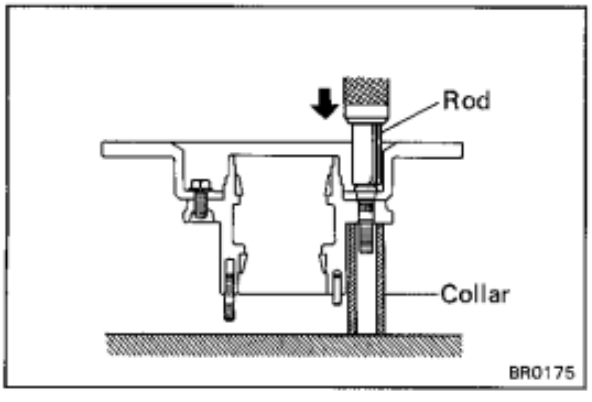

(c) Using a collar and rod, press the hub bolts into the hub.

(d) Install the axle hub and adjust the front bearing preload.

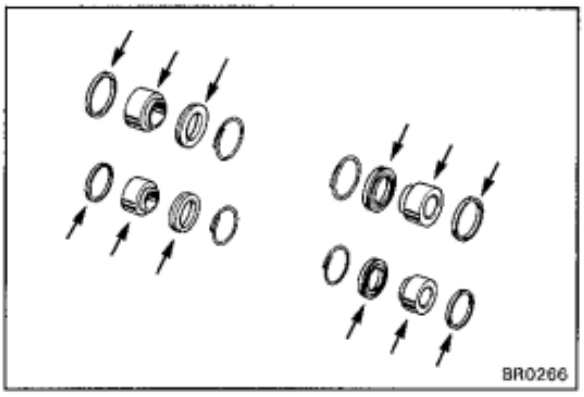

ASSEMBLY OF CYLINDER

(See page BR-69)

1. APPLY LITHIUM SOAP BASE GLYCOL GREASE TO PARTS INDICATED BY ARROWS

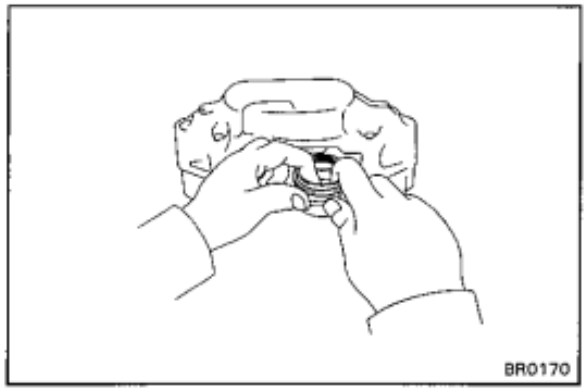

2. INSTALL PISTON SEALS IN CYLINDER

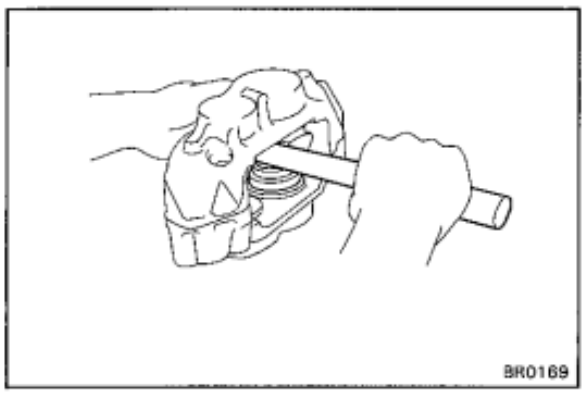

3. INSTALL PISTONS IN CYLINDER

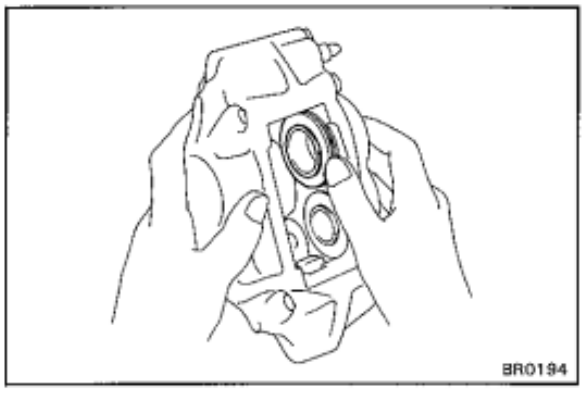

4. INSTALL CYLINDER BOOTS AND SET RINGS IN CYLINDER

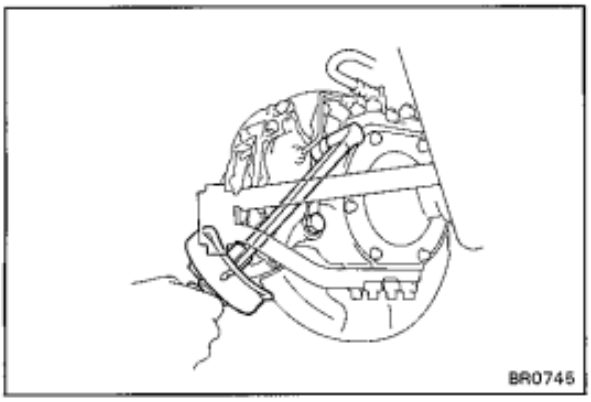

INSTALLATION OF CYLINDER

(See page BR-69)

1. **INSTALL CYLINDER**

   Install and torque the mounting bolts.

   Torque: 1,250 kg-cm (90 ft-lb, 123 N·m)

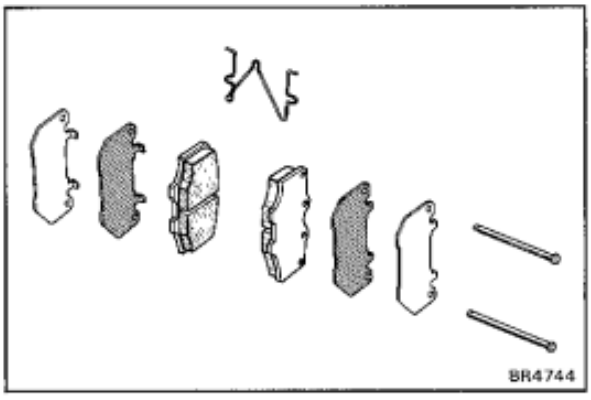

2. **INSTALL FOLLOWING PARTS**

   Before install the pads, install the four anti-squeal shims to the pads as shown.

   (a) Two pads

   (d) Anti-rattle spring

   (c) Two pins

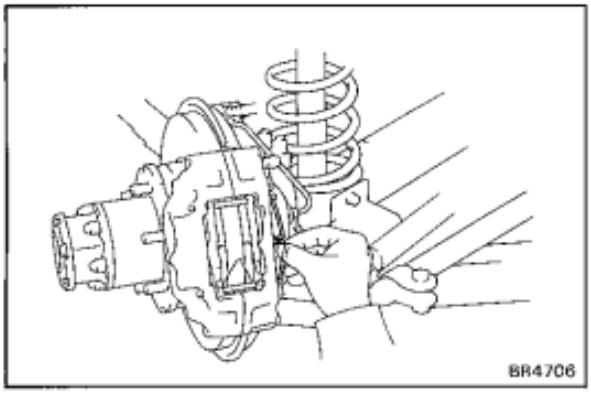

   (d) Anti-rattle clip

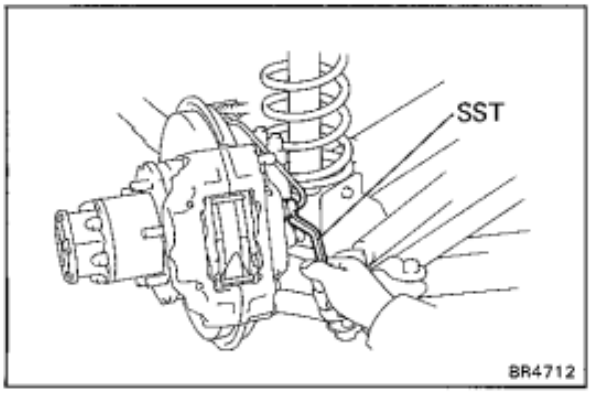

3. **CONNECT BRAKE TUBE**

   Using SST, connect the brake tube.

   SST 09751-36011

   Torque: 155 kg-cm (11 ft-lb, 15 N·m)

4. **FILL BRAKE RESERVOIR WITH BRAKE FLUID AND BLEED BRAKE SYSTEM**

   (See page BR-7)

5. **CHECK FOR FLUID LEAKAGE**

6. **INSTALL FRONT WHEEL**

REAR BRAKE

Drum Brake

COMPONENTS

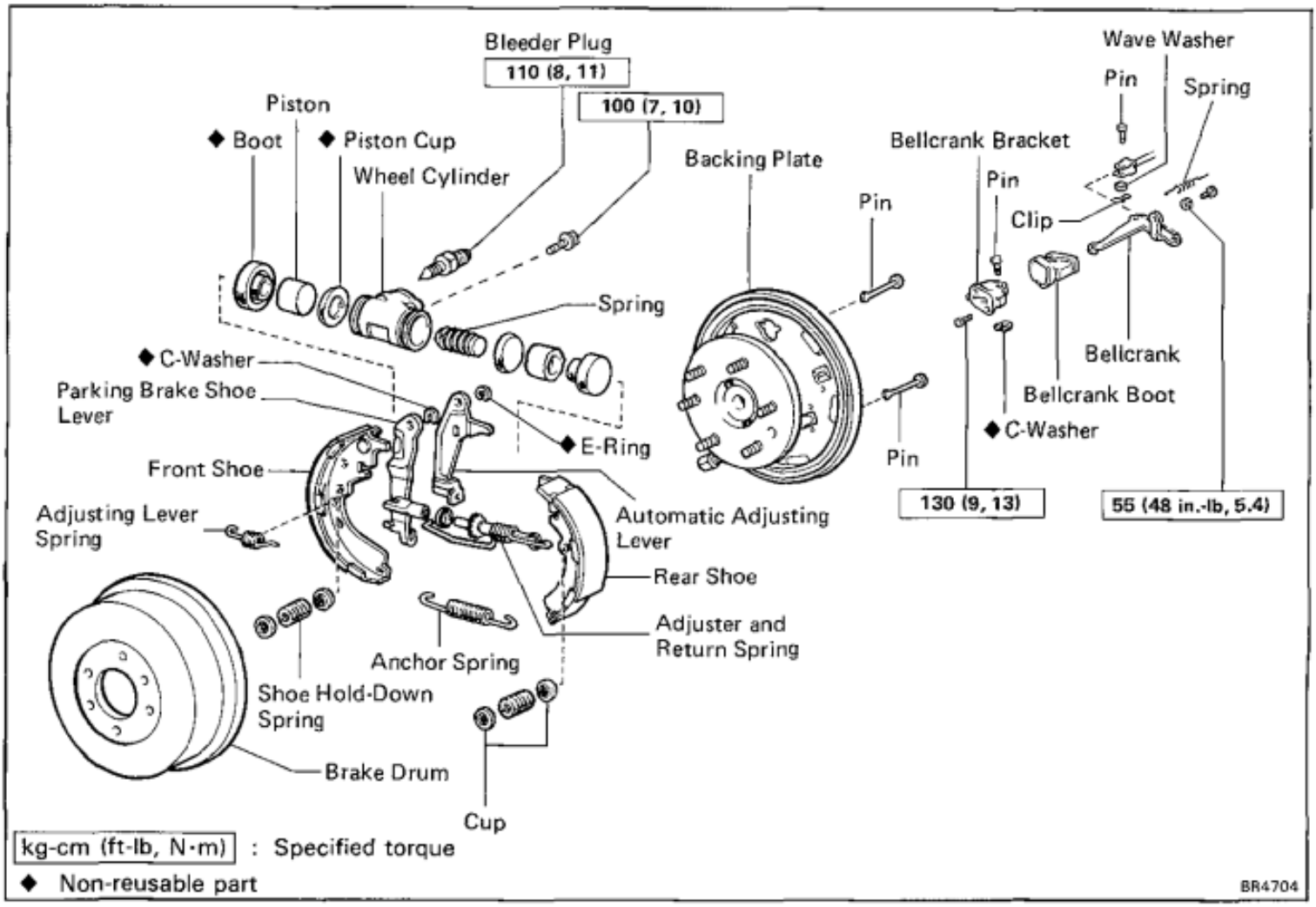

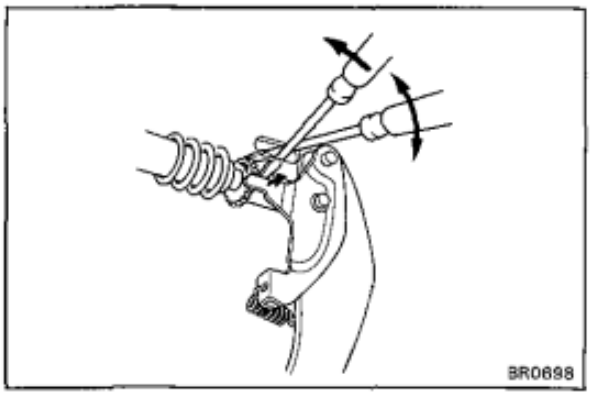

REMOVAL OF REAR BRAKE

1. REMOVE BRAKE DRUM

HINT: If the brake drum cannot be removed easily, perform the following steps.

(a) Remove the hole plug from the backing plate.

(b) Insert a screwdriver through the hole and hold the adjusting lever away from the adjuster.

(c) Using another screwdriver, reduce the brake shoe adjustment by turning the adjuster.

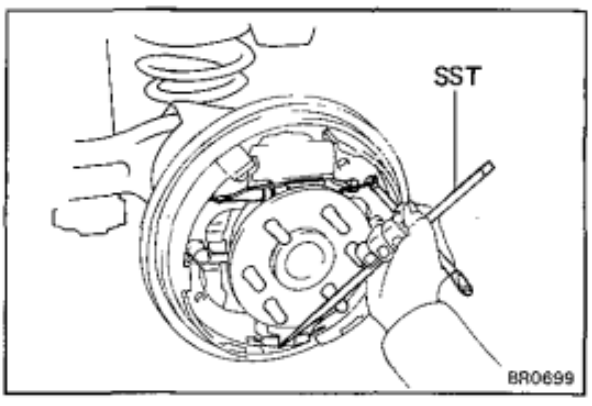

2. REMOVE REAR BRAKE SHOE

(a) Using SST, remove the return spring from the rear shoe side.

SST 09703-30010

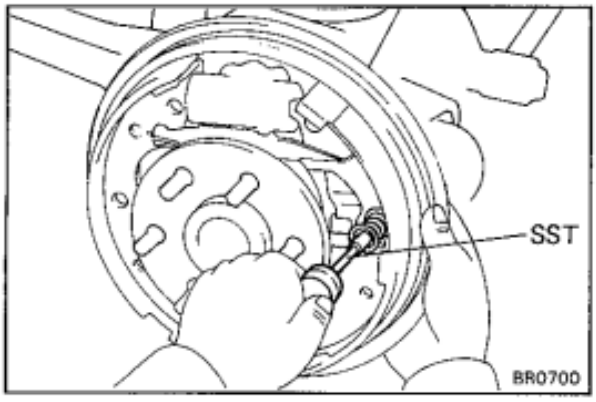

(b) Using SST, remove the two cups, shoe hold-down spring and pin.

SST 09718-00010

(c) Remove the rear brake shoe and anchor spring.

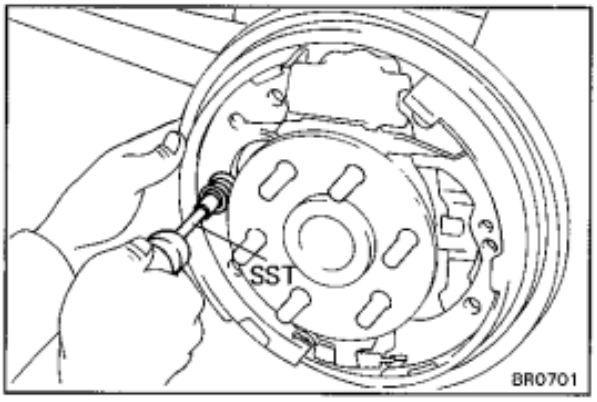

3. REMOVE FRONT BRAKE SHOE AND ADJUSTER

(a) Using SST, remove the two cups, shoe hold-down spring and pin, and remove the shoe.

SST 09718-00010

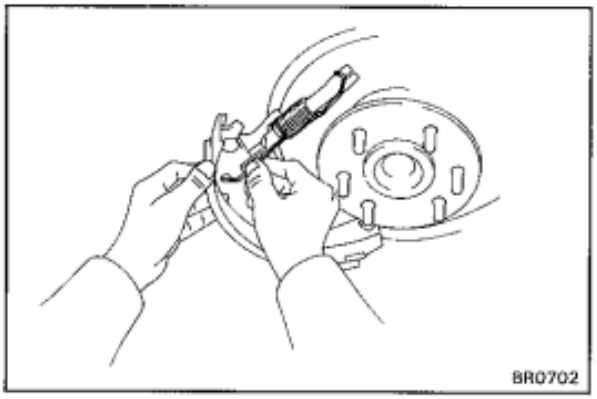

(b) Remove the adjuster and return spring from the parking brake shoe lever.

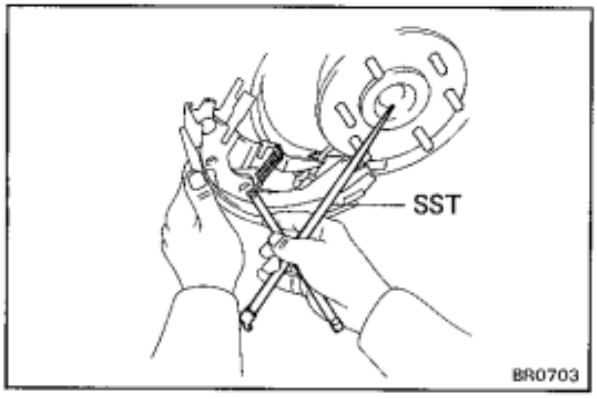

(c) Using SST, remove the adjusting lever spring.

SST 09703-30010

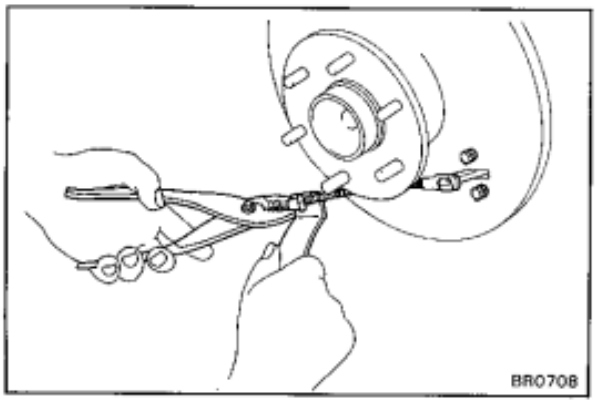

(d) Disconnect the parking brake cable from the parking brake shoe lever.

(e) Remove the parking brake cable.

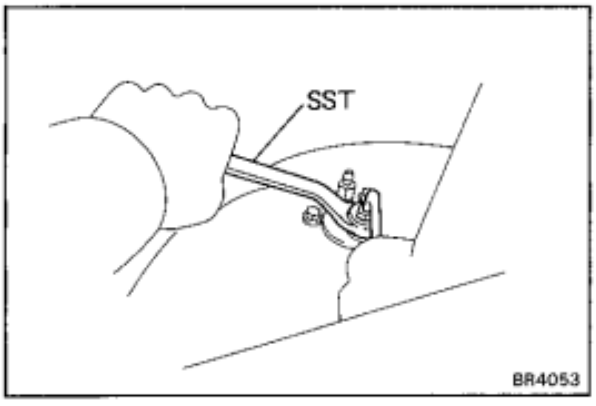

4. IF NECESSARY, REMOVE AND DISASSEMBLE WHEEL CYLINDER

(a) Using SST, disconnect the brake tube.
Use a container to catch the brake fluid.

SST 09751-36011

(b) Remove the two bolts and the wheel cylinder.

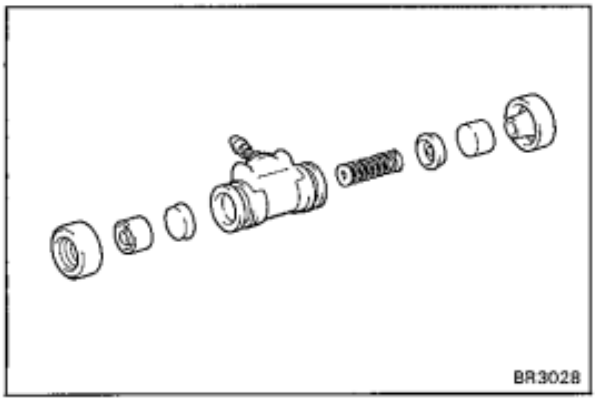

(c) Remove the two boots, two pistons, two piston cups and spring from the cylinder.

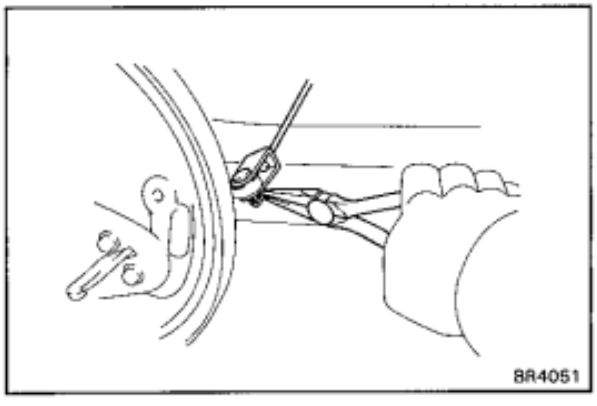

5. IF NECESSARY, REMOVE AND DISASSEMBLE BELLCRANK ASSEMBLY

(a) Remove the two tension springs from the bellcrank.

(b) Remove the clip and pin, then disconnect the parking brake cable.

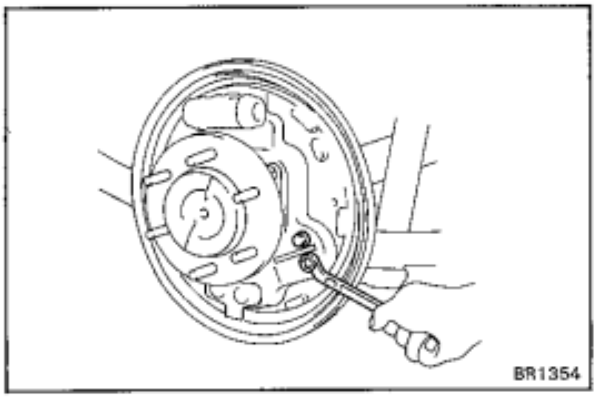

(c) Remove the two bolts and parking brake bellcrank assembly.

(d) Remove the boot from the parking brake bellcrank bracket.

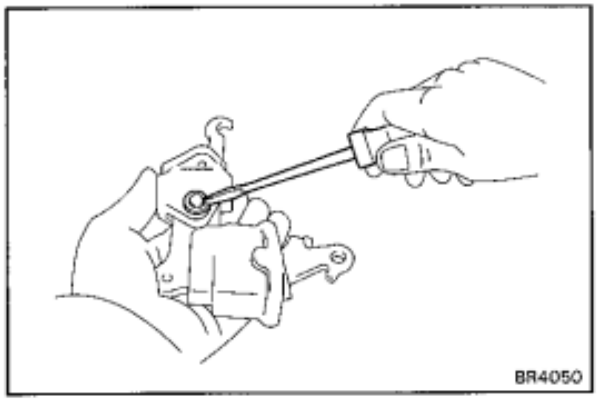

(e) Using a screwdriver, remove the C-washer and pin.

(f) Remove the parking brake bellcrank from the crank bracket.

(g) Remove the boot.

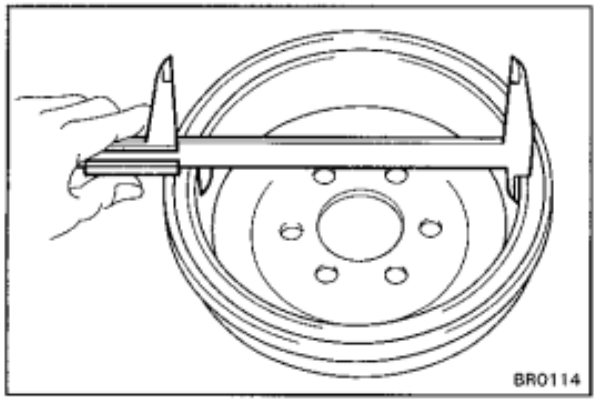

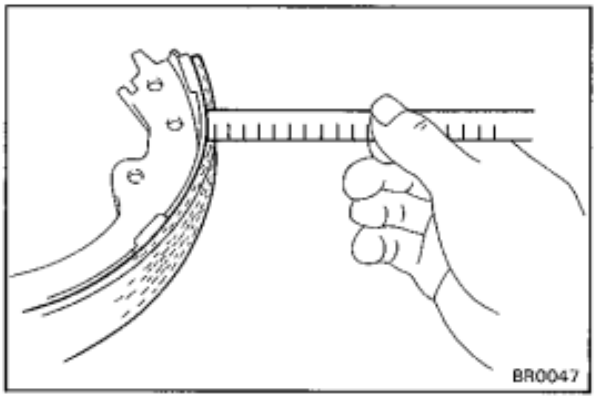

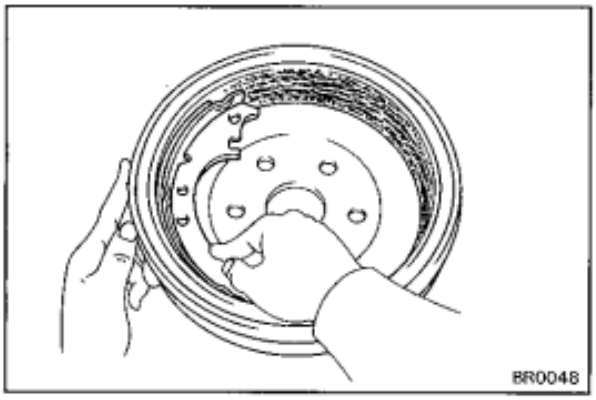

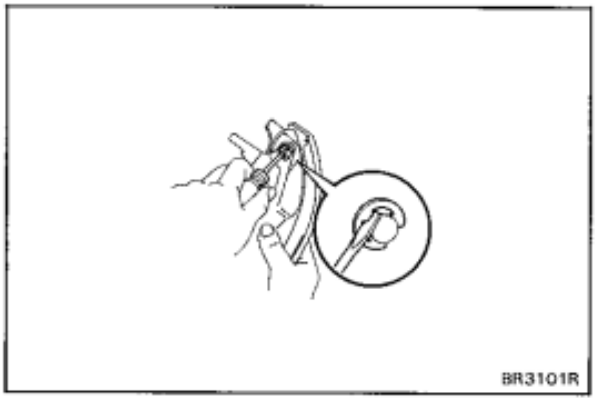

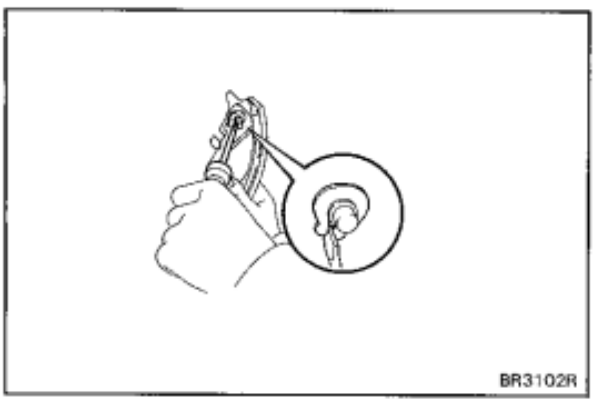

INSPECTION AND REPLACEMENT OF REAR BRAKE COMPONENTS

1. MEASURE BRAKE DRUM INSIDE DIAMETER

Maximum inside diameter:

Heavy-Duty: 297.0 mm (11.693 in.)
Light-Duty: 256.0 mm (10.079 in.)

Standard inside diameter:

Heavy-Duty: 295.0 mm (11.614 in.)
Light-Duty: 254.0 mm (10.000 in.)

If the drum is scored or worn, the brake drum may be lathed.

2. MEASURE BRAKE SHOE LINING THICKNESS

Minimum thickness:

Heavy-Duty: 1.5 mm (0.059 in.)
Light-Duty: 1.0 mm (0.039 in.)

Standard thickness:

Heavy-Duty: 6.5 mm (0.256 in.)
Light-Duty: 5.0 mm (0.197 in.)

If the shoe lining is less than minimum or shows signs of uneven wear, replace the brake shoes.

HINT: If any of the brake shoes have to be replaced, replace all of the brake shoes in order to maintain even braking.

3. INSPECT BRAKE LINING AND DRUM FOR PROPER CONTACT

If the contact between the brake lining and drum is improper, repair the lining with a brake shoe grinder, or replace the brake shoe assembly.

4. IF NECESSARY, REPLACE BRAKE SHOES

(a) Using a screwdriver, remove the automatic adjusting lever from the front shoe.

(b) Using a screwdriver, remove the parking brake shoe lever from the front shoe.

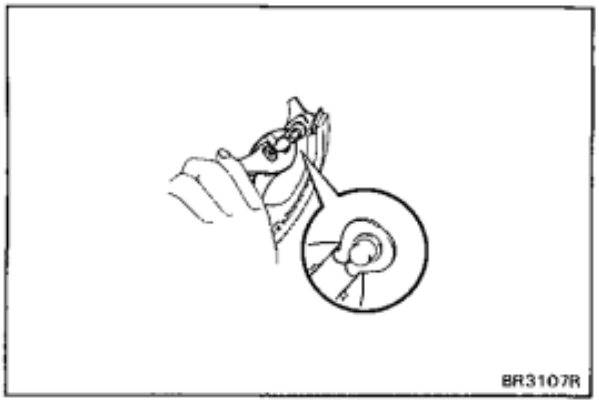

(c) Using pliers, install the parking brake shoe lever with a new C-washer.

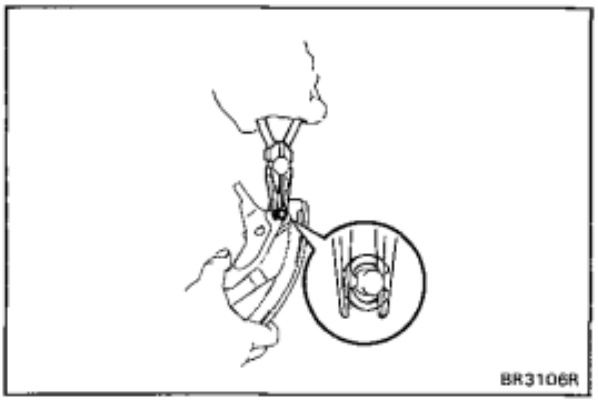

(d) Install the automatic adjusting lever with a new E-ring.

5. **INSPECT WHEEL CYLINDER FOR CORROSION OR DAMAGE**

6. **INSPECT BACKING PLATE FOR WEAR OR DAMAGE**

7. **INSPECT BELLCRANK PARTS FOR BENDING, WEAR OR DAMAGE**

INSTALLATION OF REAR BRAKE

(See page BR-76)

HINT: Assemble the parts in the correct direction as shown.

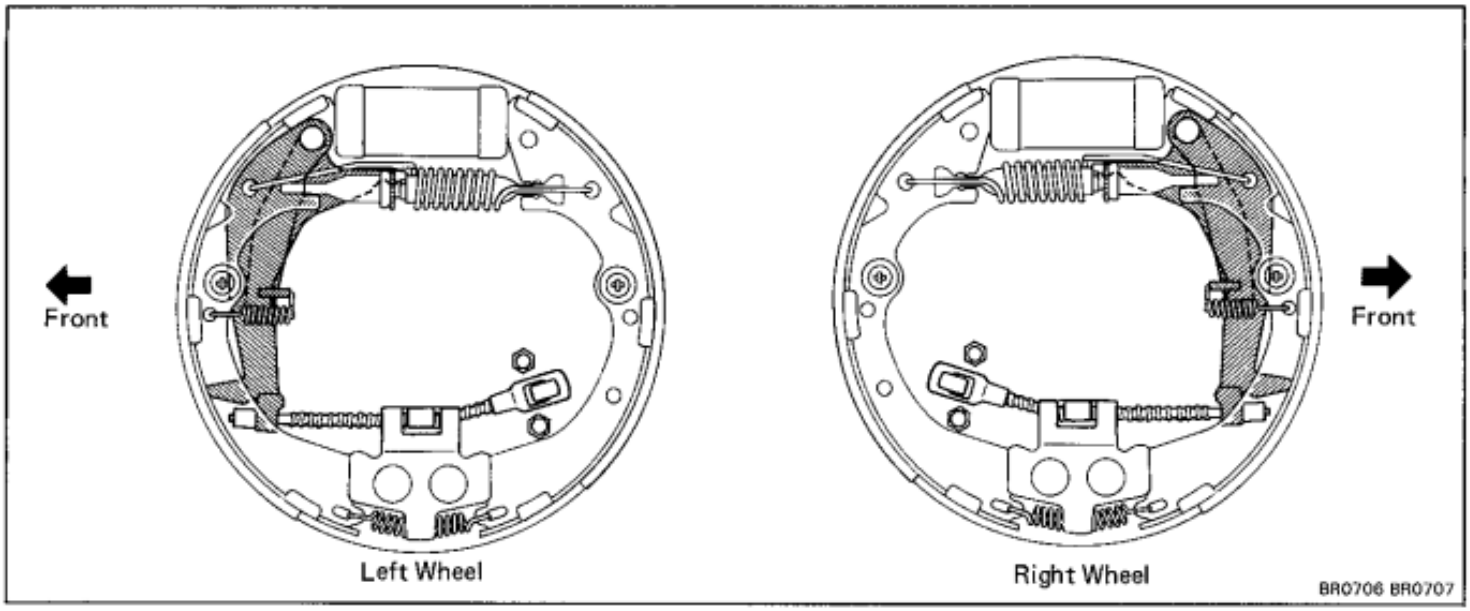

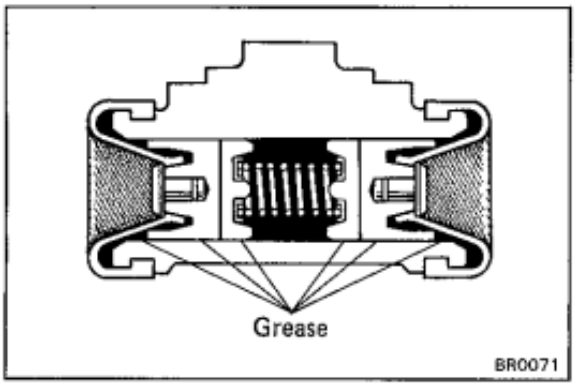

1. **IF NECESSARY, ASSEMBLE AND INSTALL WHEEL CYLINDER**

(a) Apply lithium soap base glycol grease to the piston cups and piston.

Install the spring and two piston cups in the wheel cylinder.

Make sure the flanges of the cups are pointed inward.

(b) Install two pistons. Apply lithium soap base glycol grease as shown, and install the two boots.

(c) Install the wheel cylinder on the backing plate with two bolts.

Torque: 100 kg-cm (7 ft-lb, 10 N·m)

(d) Using SST, connect the brake tube.

SST 09751-36011

Torque: 155 kg-cm (11 ft-lb, 15 N·m)

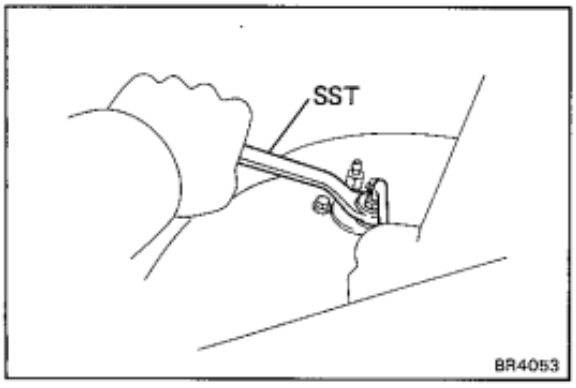

2. **IF NECESSARY, ASSEMBLE AND INSTALL PARKING BRAKE BELLCRANK ASSEMBLY**

(a) Apply lithium soap base glycol grease to the boot.

(b) Install the boot to the parking brake bellcrank.

(c) Install the bellcrank to the crank bracket.

(d) Install the pin with a new C-washer.

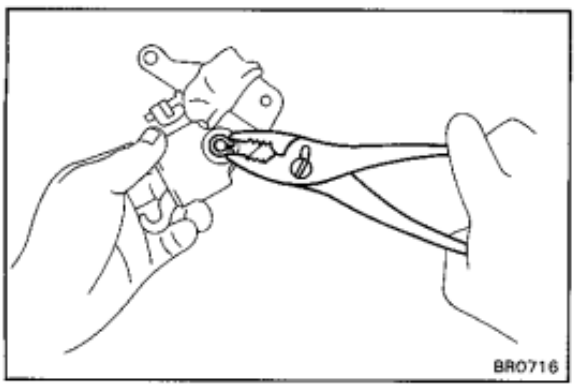

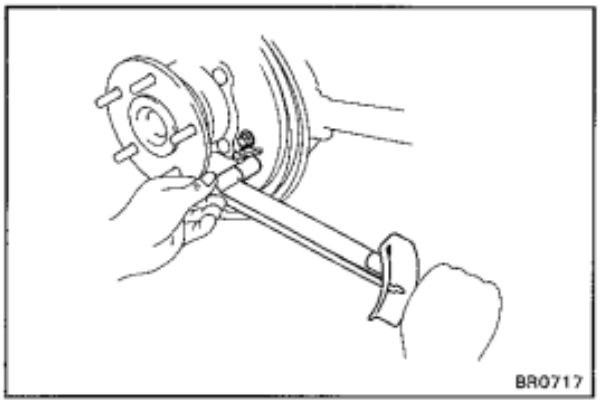

(e) Install the bellcrank assembly on the backing plate with two bolts.

(f) Torque the bolts.

Torque: 130 kg-cm (9 ft-lb, 13 N·m)

(g) Connect the parking brake cable to the bellcrank assembly with the pin and clip.

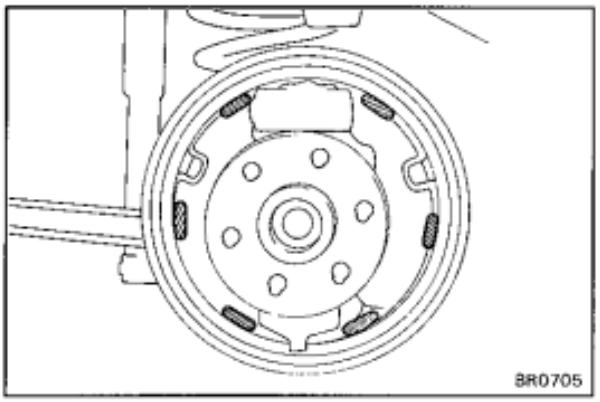

3. APPLY HIGH TEMPERATURE GREASE ON BACKING PLATE, AS SHOWN

Apply high temperature grease to the brake shoe contact surfaces.

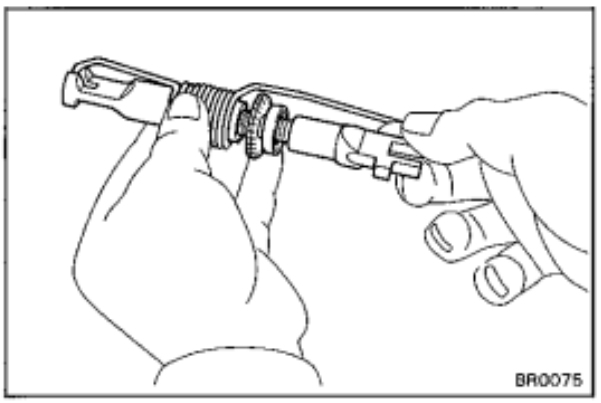

4. APPLY HIGH TEMPERATURE GREASE TO ADJUSTER BOLT THREADS AND ENDS

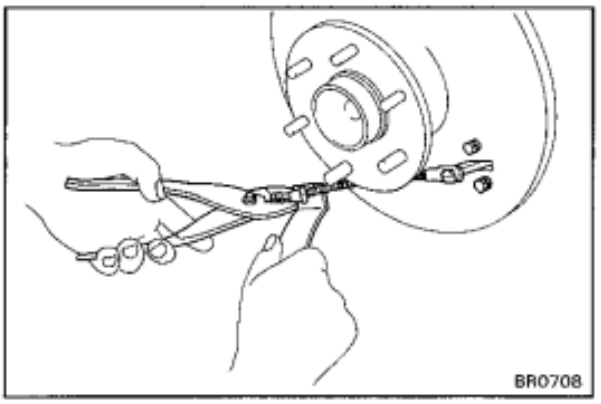

5. INSTALL PARKING BRAKE CABLE AND CONNECT TO PARKING BRAKE SHOE LEVER

(a) Install the parking brake cable to bellcrank as shown.

(b) Install parking brake cable to the parking brake shoe lever.

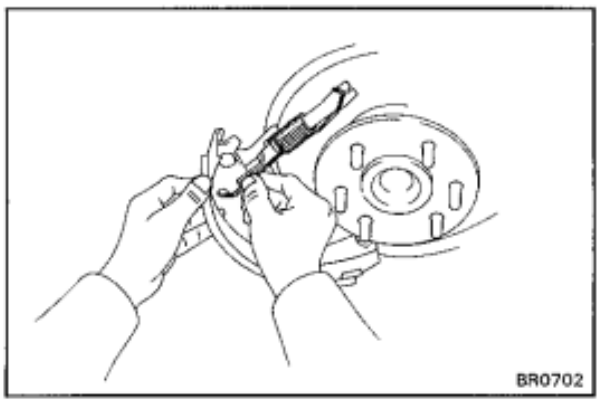

6. INSTALL ADJUSTER ONTO FRONT SHOE

(a) Install the adjuster and return spring onto the front shoe.

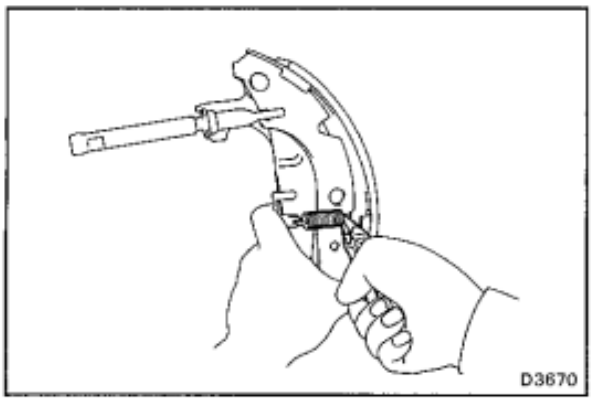

(b) Using SST, install the adjusting lever spring.

SST 09703-30010

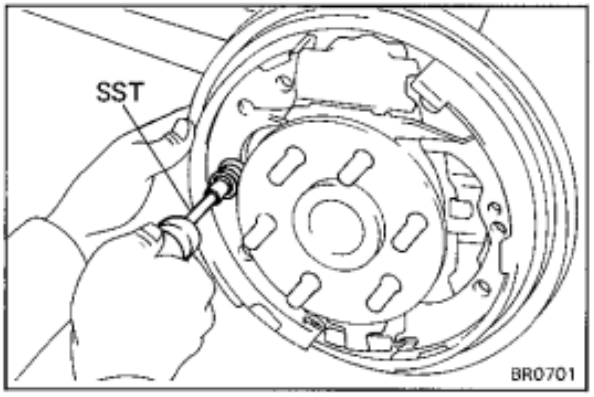

7. INSTALL FRONT SHOE

(a) Set the front shoe in place with the end of the shoe inserted in the wheel cylinder and the other end in the anchor plate.

(b) Using SST, install the pin, two cups and shoe hold-down spring.

SST 09718-00010

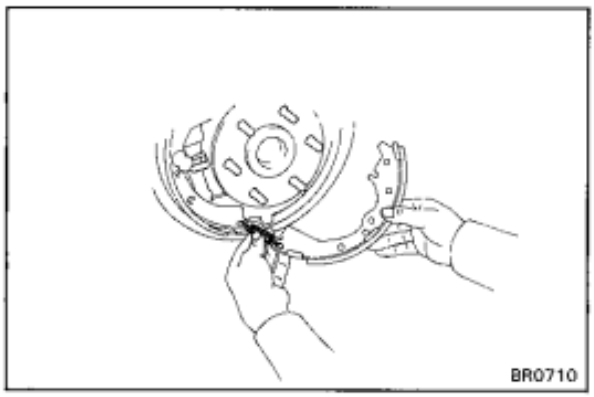

8. INSTALL REAR SHOE

(a) Install the anchor spring between the front and rear shoes.

(b) Set the rear shoe in place with the end of the shoe inserted in the wheel cylinder and the adjuster in place.

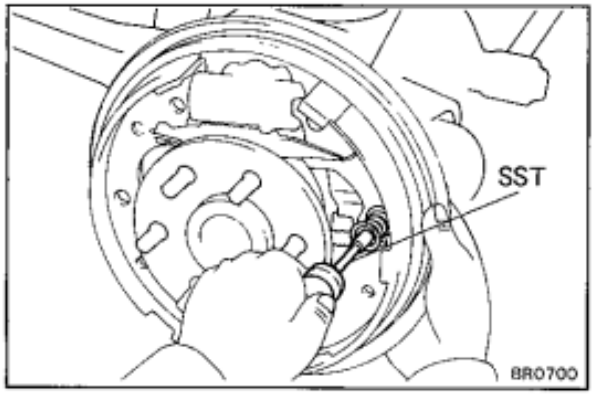

(c) Using SST, install the pin, two cups and shoe hold-down spring.

SST 09718-00010

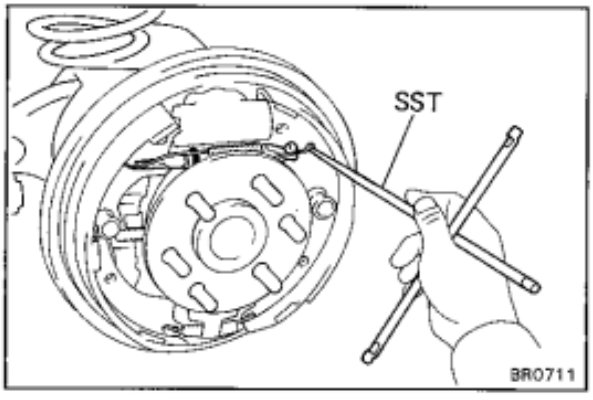

(d) Using SST, connect the return spring to the rear shoe.

SST 09703-30010

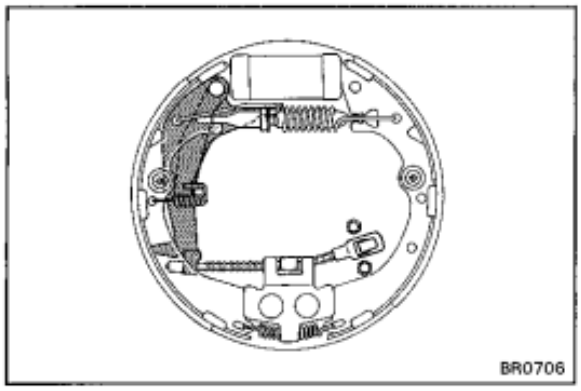
BR0706

9. CHECK OPERATION OF AUTOMATIC ADJUSTING MECHANISM

(a) Check that the adjusting bolt turns while pulling the parking brake cable rearward.

If the bolt does not turn, check the installation of the rear brakes.

(b) Adjust the adjuster to the shortest possible length.

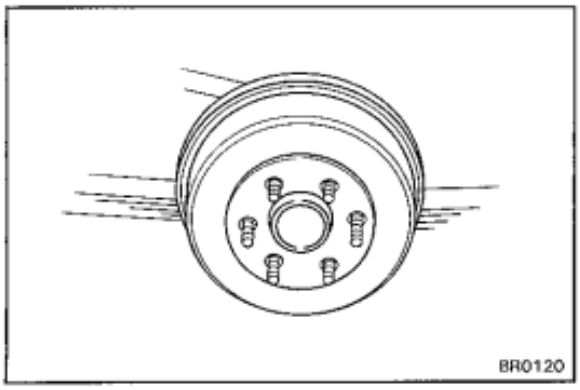
BR0120

(c) Install the drum.

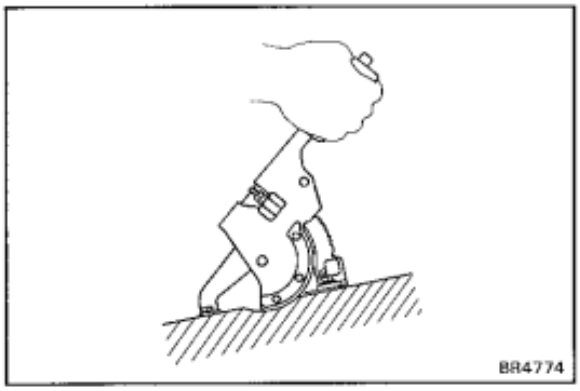
BR4774

(d) Pull the parking brake lever all the way up and down until the clicking sound can no longer be heard.

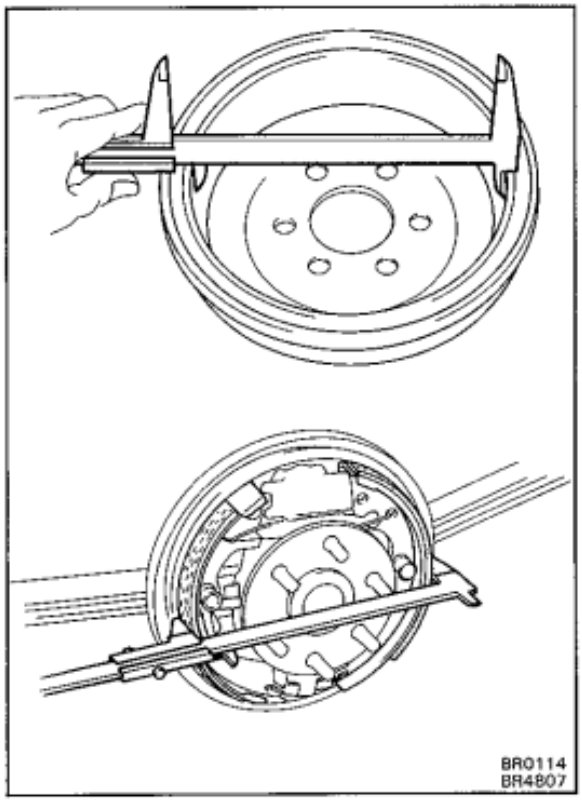
BR0114
BR4807

10. CHECK CLEARANCE BETWEEN BRAKE SHOES AND DRUM

(a) Remove the drum.

(b) Measure the brake drum inside diameter and diameter of the brake shoes. Check that the difference between the diameter is the correct shoe clearance.

Shoe clearance: 0.6 mm (0.024 in.)

If incorrect, check the parking brake system.

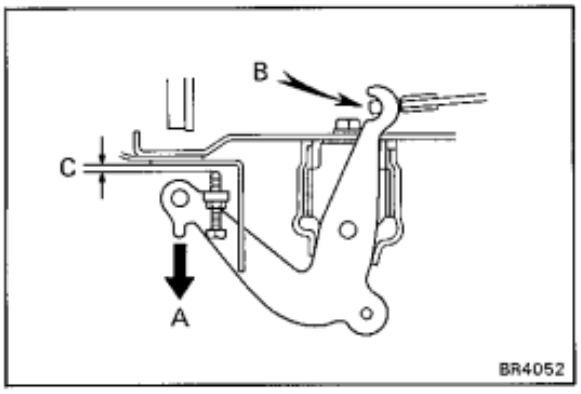

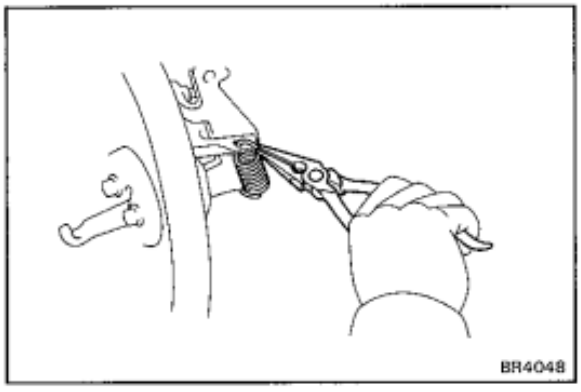

11. IF NECESSARY, ADJUST BELLCRANK

(a) Lightly pull the bellcrank in direction A until there is no slack at part B.

(b) In this condition, turn the adjusting bolt so that dimension C will be the following specification.

Heavy-Duty: 0.4 — 0.8 mm (0.016 — 0.031 in.)
Light-Duty: 0.2 — 0.7 mm (0.008 — 0.028 in.)

(c) Lock the adjusting bolt with the lock nut.

(d) Connect the parking brake cable No. 2 to the bellcrank.

(e) Install the two tension springs.

12. INSTALL BRAKE DRUM AND REAR WHEEL

13. FILL BRAKE RESERVOIR WITH BRAKE FLUID AND BLEED BRAKE SYSTEM
(See page BR-7)

14. CHECK FOR FLUID LEAKAGE

Disc Brake

COMPONENTS

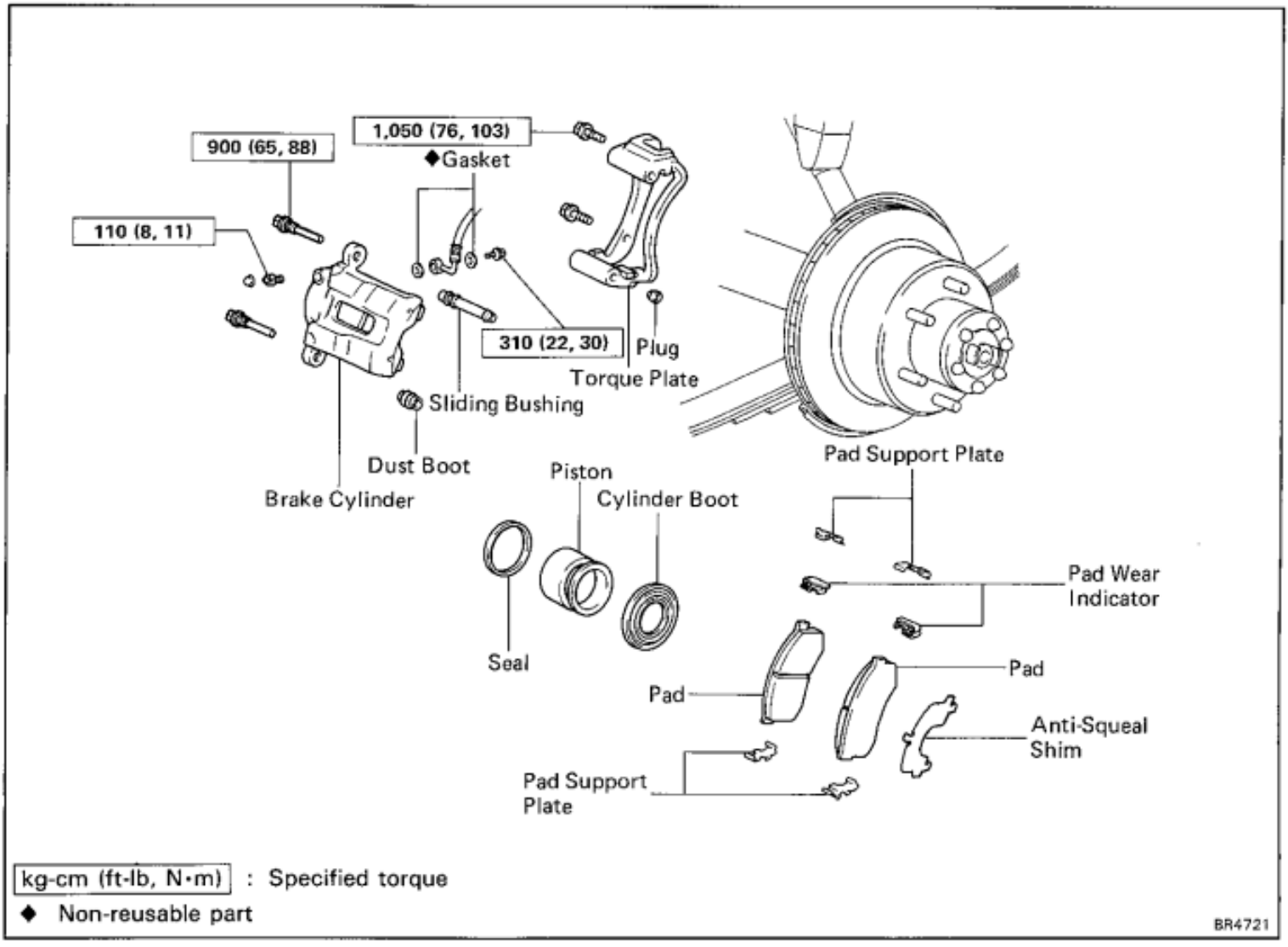

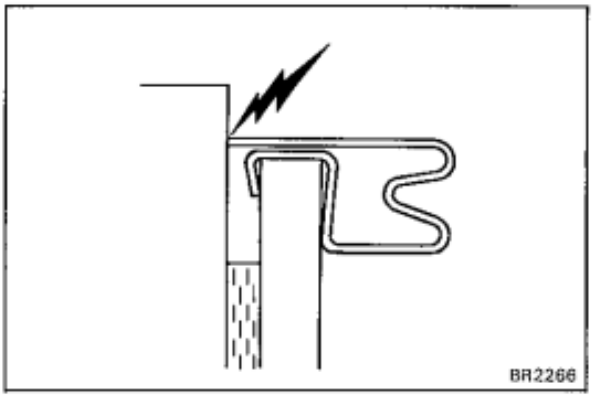

REPLACEMENT OF BRAKE PADS

HINT: If a squealing noise occurs from the brakes while driving, check the pad wear indicator plate. If the pad wear indicator plate contacts the rotor disc, the brake pads should be replaced.

1. **REMOVE REAR WHEEL**

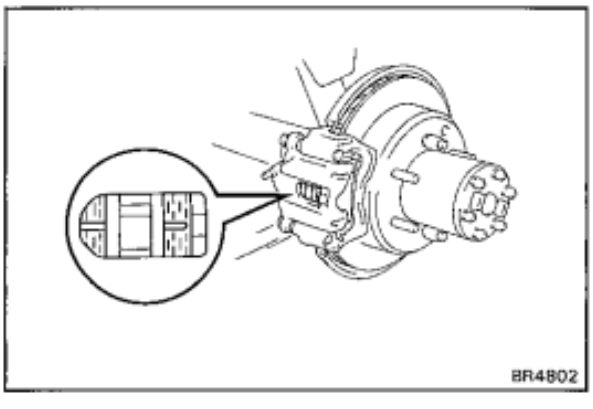

2. **INSPECT PAD LINING THICKNESS**

Check the pad thickness through the cylinder inspection hole and replace pads if not within specification.

Minimum thickness: 1.0 mm (0.039 in.)

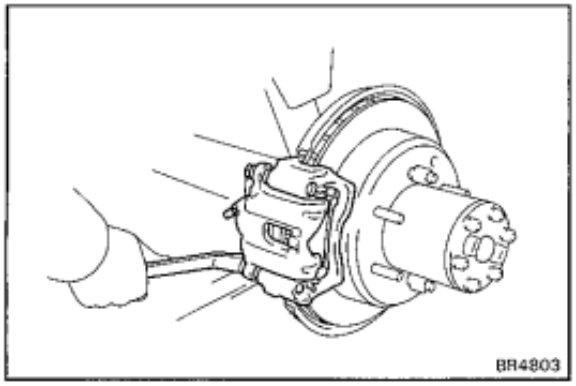

3. REMOVE BRAKE CYLINDER

(a) Remove the sliding main pin and sliding sub pin.

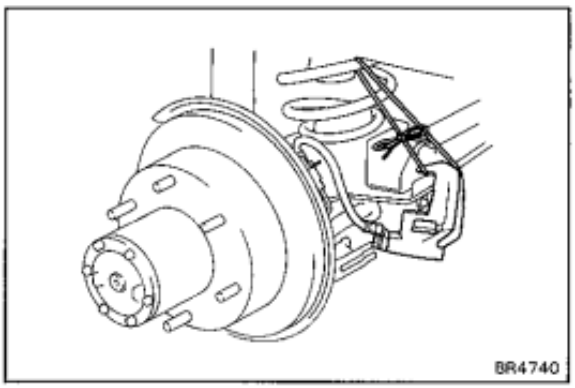

(b) Remove the brake cylinder and suspend it so the hose is not stretched.

HINT: Do not disconnect the brake hose.

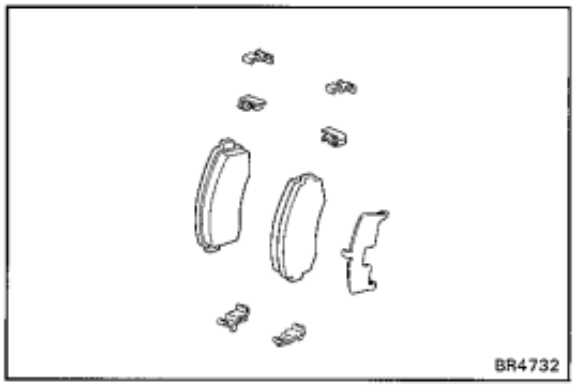

4. REMOVE FOLLOWING PARTS

(a) Two brake pads

(b) Anti-squeal shim

(c) Two pad wear indicator plates

(d) Four pad support plates

5. CHECK ROTOR DISC THICKNESS
(See step 2 on page BR-90)

6. CHECK ROTOR DISC RUNOUT
(See step 3 on page BR-90)

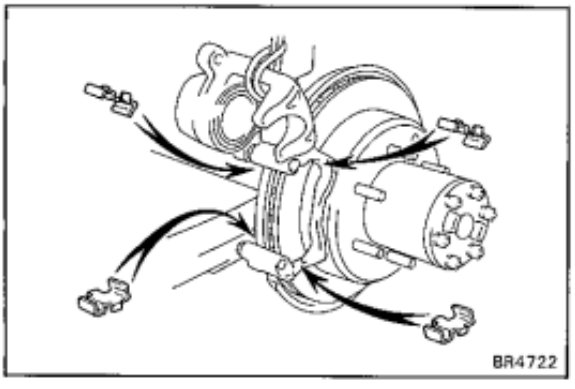

7. INSTALL PAD SUPPORT PLATES

Install the four pad support plates.

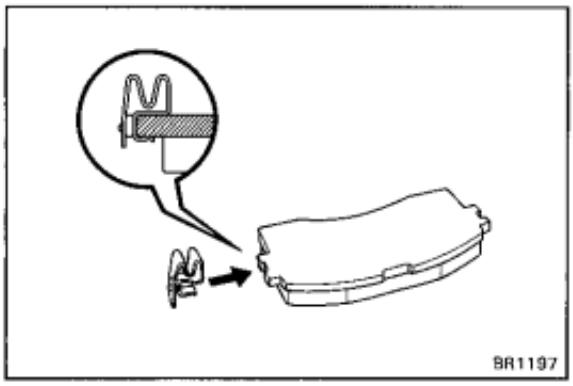

8. INSTALL NEW PADS

(a) Install two pad wear indicator plates to the each pad.

(b) Install the anti-squeal shim to the outside pad.

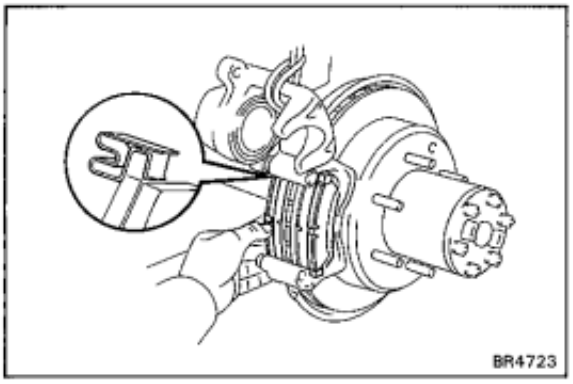

(c) Install the two pads so the wear indicator plate is facing upward.

NOTICE: Do not allow oil or grease to get on the rubbing face.

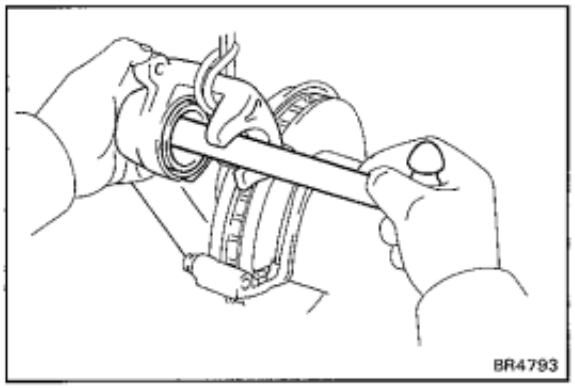

9. INSTALL CYLINDER

(a) Draw out a small amount of brake fluid from reservoir.

(b) Press in piston with a hammer handle or an equivalent.

HINT: Always change the pads on one wheel at a time as there is a possibility of the opposite piston flying out.

(c) Install the brake cylinder carefully so the boot is not wedged.

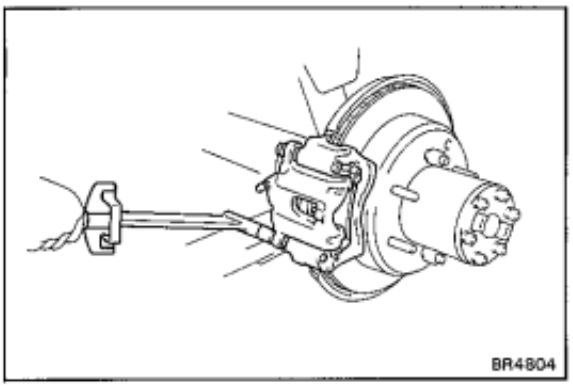

(d) Install and torque the sliding main pin and sub pin.

Torque: 900 kg-cm (65 ft-lb, 88 N·m)

10. INSTALL REAR WHEEL

11. FILL BRAKE FLUID

REMOVAL OF CYLINDER

(See page BR-86)

1. **DISCONNECT BRAKE HOSE**

   Remove the union bolt and disconnect the brake hose.

   Use a container to catch the brake fluid.

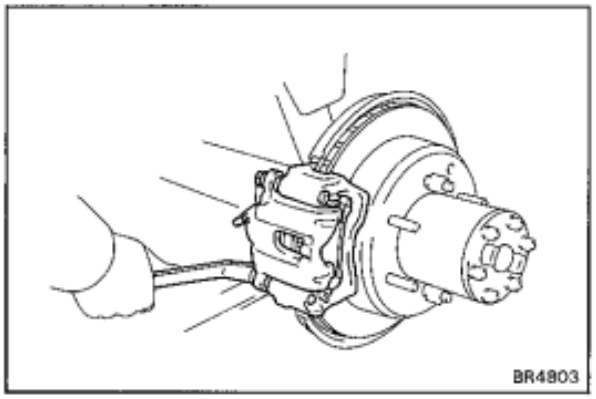

2. **REMOVE CYLINDER FROM TORQUE PLATE**

   Remove the two sliding pins and cylinder.

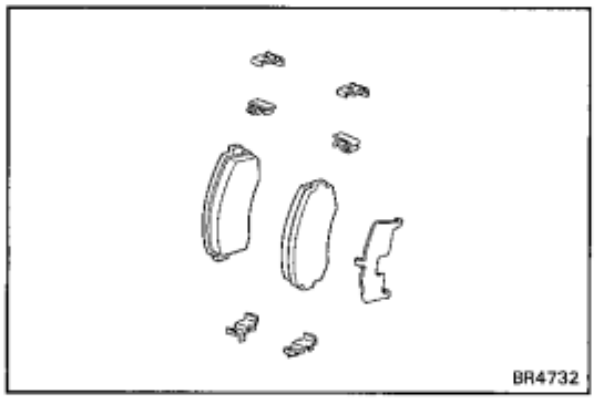

3. **REMOVE PADS**

   (See step 3 on page BR-87)

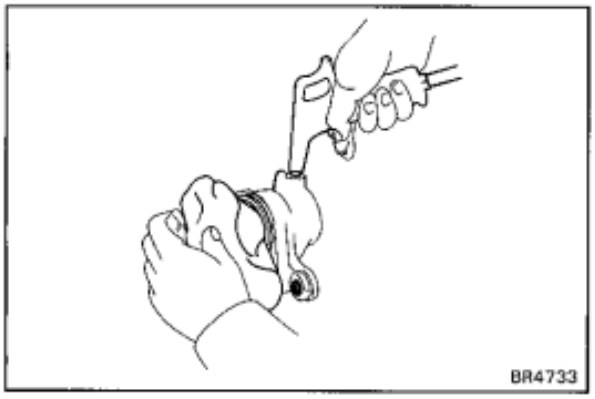

DISASSEMBLY OF CYLINDER

(See page BR-86)

1. **REMOVE PISTON FROM CYLINDER**

   (a) Put a piece of cloth or equivalent between the piston and cylinder.

   (b) Use compressed air to remove the piston and cylinder boot from the cylinder.

   NOTICE: Do not place your fingers in front of the piston when using compressed air.

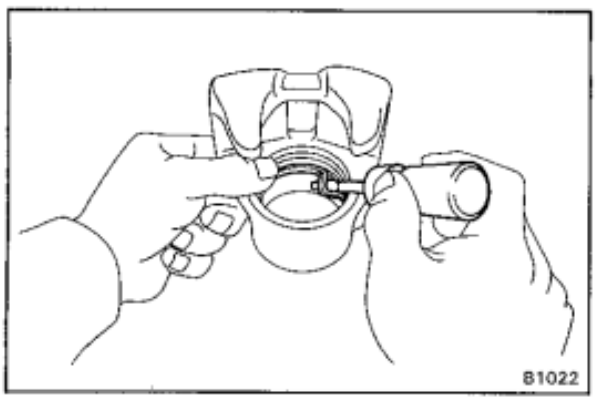

2. **REMOVE PISTON SEAL FROM BRAKE CYLINDER**

   Using a screwdriver, remove the piston seal.

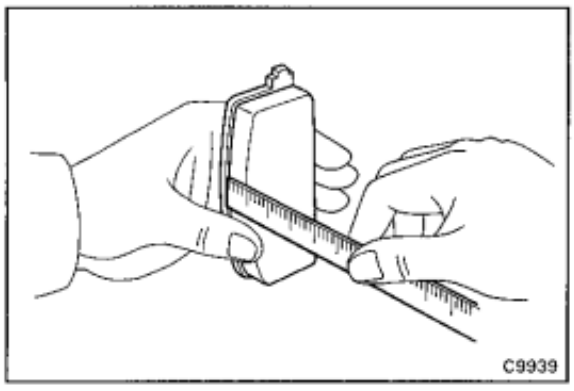

INSPECTION AND REPAIR OF REAR BRAKE COMPONENTS

1. MEASURE PAD LINING THICKNESS

Minimum thickness: 1.0 mm (0.039 in.)

Standard thickness: 10.0 mm (0.394 in.)

Replace the pad if the thickness is less than the minimum or if it shows sign of uneven wear.

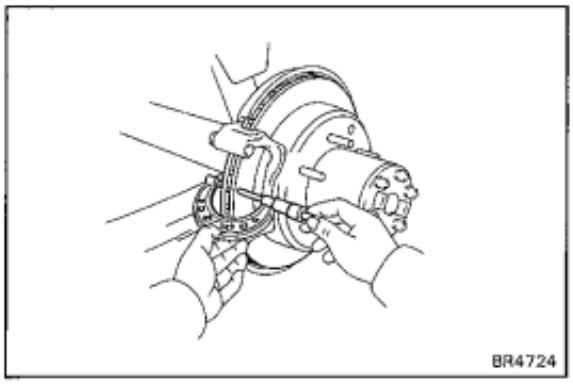

2. MEASURE ROTOR DISC THICKNESS

Minimum thickness: 16.0 mm (0.630 in.)

Standard thickness: 18.0 mm (0.709 in.)

If the disc is scored or worn, or if thickness is less than minimum, repair or replace the disc.

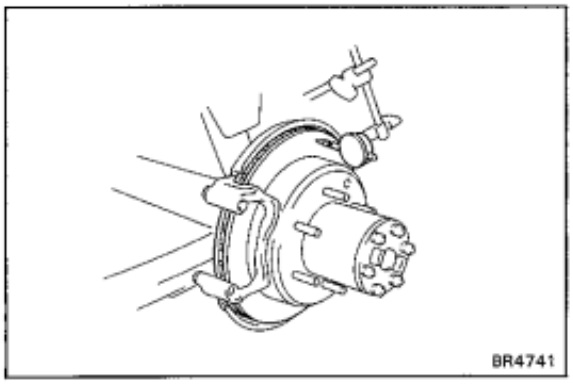

3. MEASURE ROTOR DISC RUNOUT

Measure the rotor disc runout at 10 mm (0.39 in.) from the outer edge of the rotor disc.

Maximum disc runout: 0.15 mm (0.0059 in.)

If the runout is greater than maximum, replace the disc.

HINT: Before measuring the runout, confirm that the front bearing play is within specification.

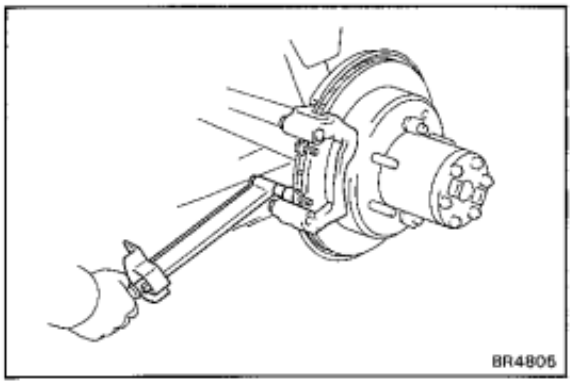

4. IF NECESSARY, REPLACE ROTOR DISC

(a) Remove the torque plate from the knuckle.

(b) Remove the wheel nuts of temporarily installed rotor disc and pull off the rotor disc from the axle hub.

(c) Install a new rotor disc and temporarily fasten it with the wheel nuts.

(d) Install the torque plate onto the knuckle.

Torque: 1,050 kg-cm (76 ft-lb, 103 N·m)

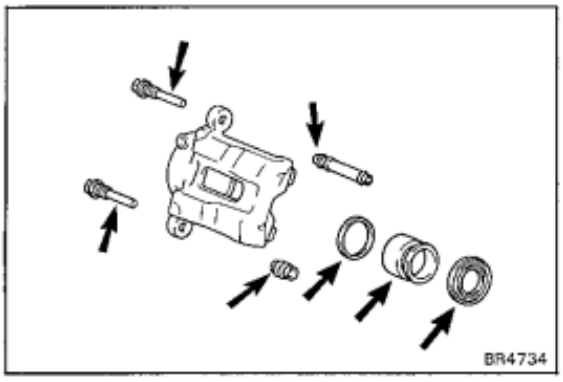

ASSEMBLY OF CYLINDER

(See page BR-86)

1. **APPLY LITHIUM SOAP BASE GLYCOL GREASE TO FOLLOWING PARTS**
   (a) Sliding bushing, hole plug and dust boot.
   (b) Piston, piston seal and cylinder boot.

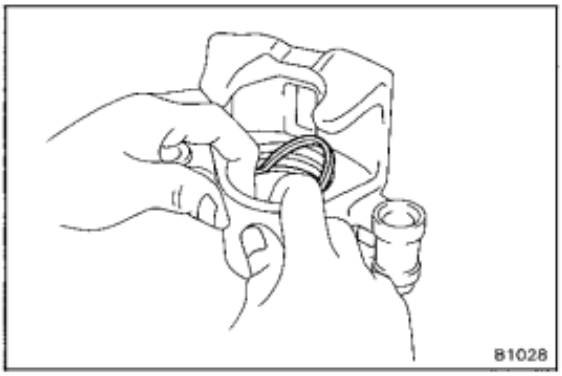

2. **INSTALL PISTON SEAL IN CYLINDER**

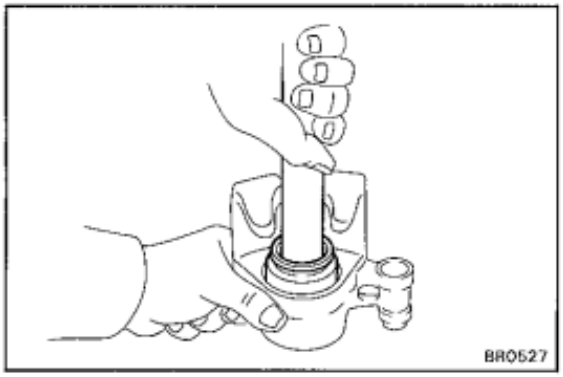

3. **INSTALL PISTON AND CYLINDER BOOT IN CYLINDER**

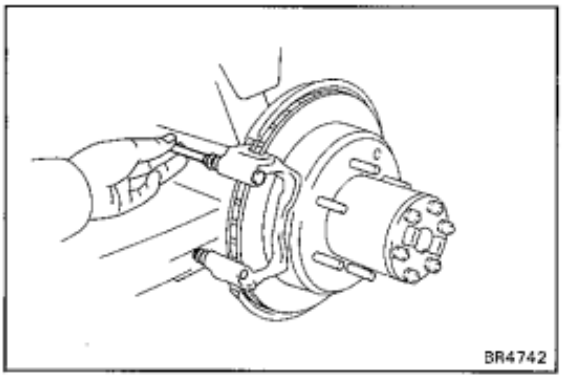

4. **INSTALL DUST BOOT AND SLIDING BUSHING**
   (a) Install the dust boot into the sliding sub pin side.
   (b) Using a plastic bar, install the cylinder sliding bushing into the sliding main pin side.

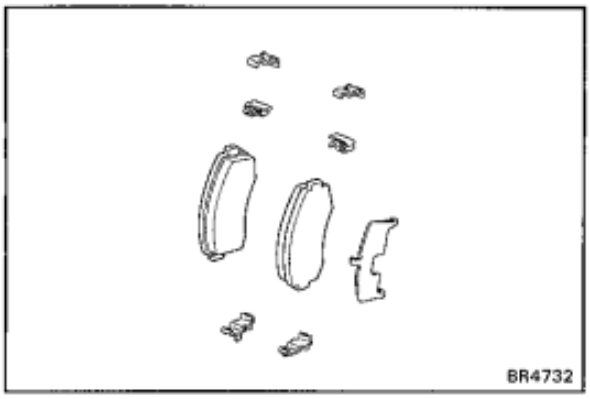

INSTALLATION OF CYLINDER

(See page BR-86)

1. **INSTALL PADS**
   (See steps 7 to 8 on pages BR-87 and 89)

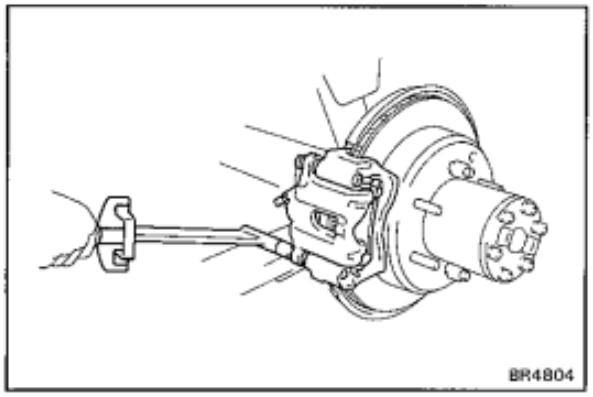

2. **INSTALL CYLINDER**
   (a) Insert the brake cylinder.
   (b) Install and torque the two installation bolts.
   Torque: 900 kg-cm (65 ft-lb, 88 N·m)

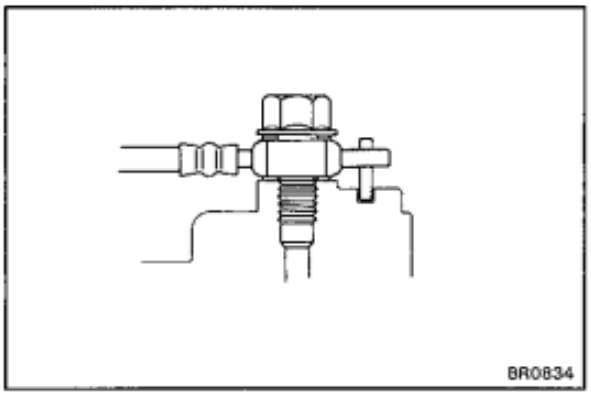

3. **CONNECT BRAKE HOSE TO CYLINDER**
   Set the brake hose and new gaskets in position and install the union bolt.
   Torque: 310 kg-cm (22 ft-lb, 30 N·m)

4. **FILL BRAKE RESERVOIR WITH BRAKE FLUID AND BLEED BRAKE SYSTEM**
   (See page BR-7)

5. **CHECK FOR FLUID LEAKAGE**

Parking Brake (w/ Rear Disc Brake)

COMPONENTS

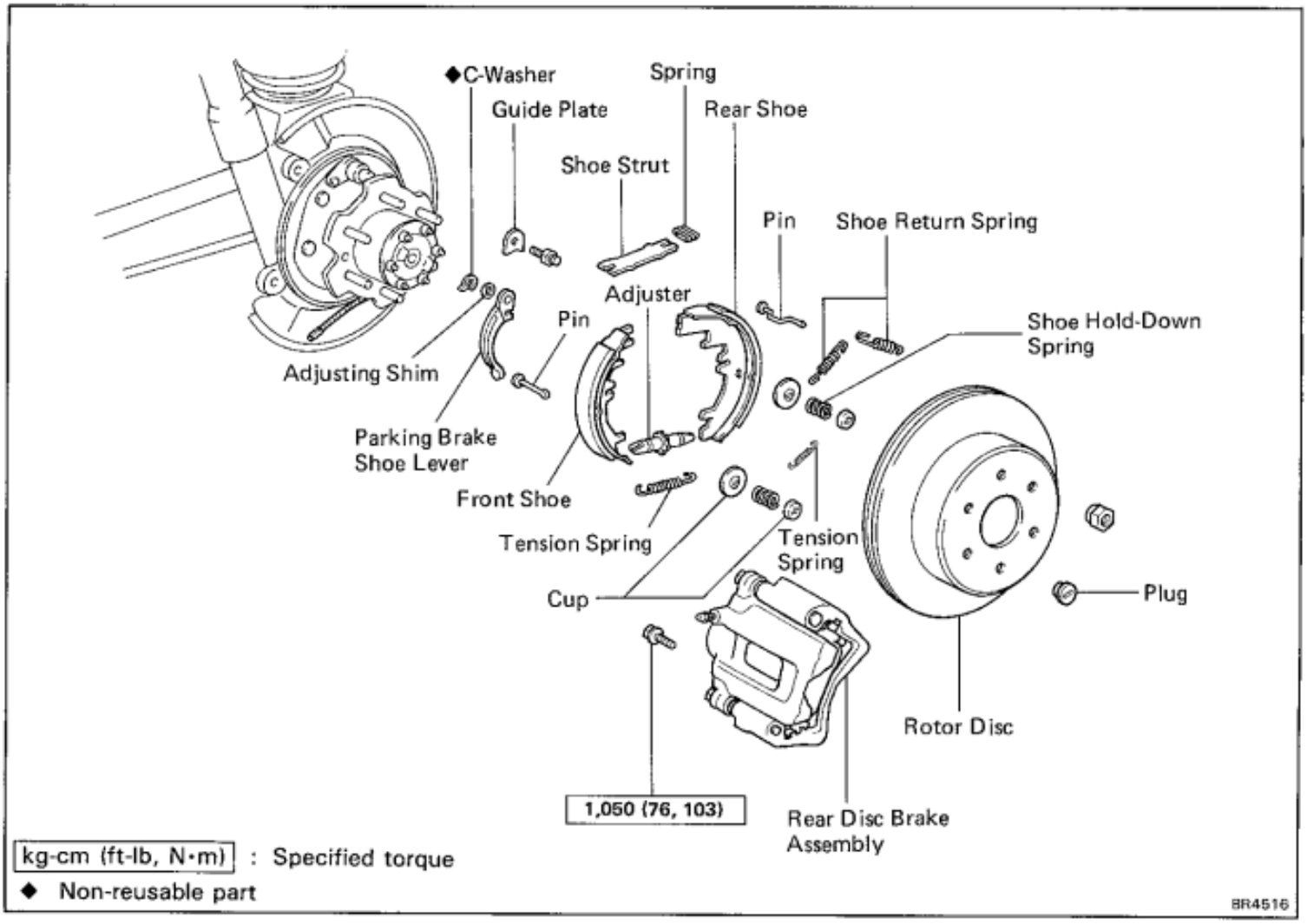

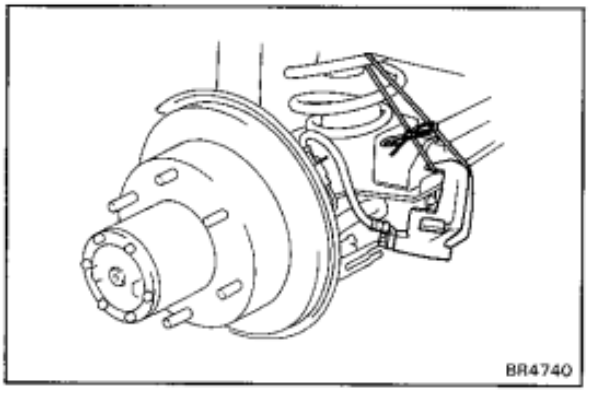

DISASSEMBLY OF PARKING BRAKE

1. REMOVE REAR DISC BRAKE ASSEMBLY

(a) Remove the two mounting bolts and remove the disc brake assembly.

(b) Suspend the disc brake so the hose is not stretched.

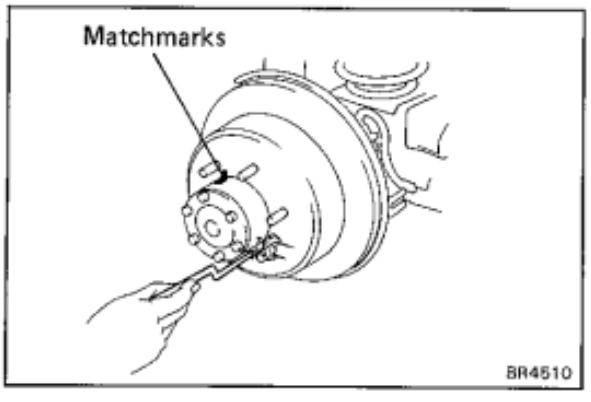

2. REMOVE ROTOR DISC

Place the matchmarks on the rotor disc and rear axle shaft, and remove the rotor disc.

HINT: If the drum cannot be removed easily, turn the shoe adjuster until the wheel turns freely.

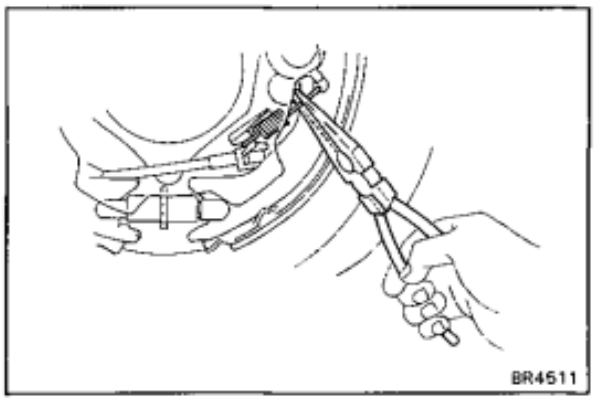

3. REMOVE TENSION SPRING

Using pliers, remove the tension spring.

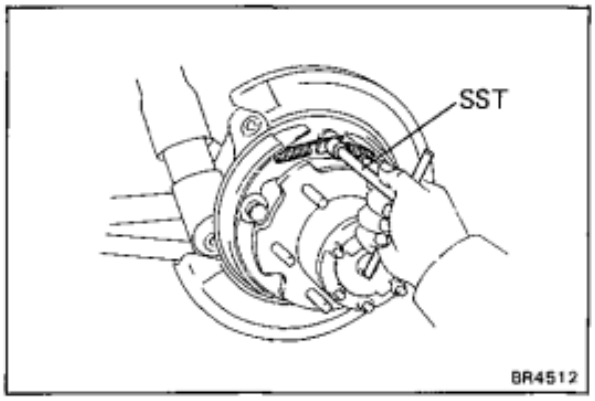

4. REMOVE SHOE RETURN SPRINGS

Using SST, remove the shoe return springs.

SST 09717-20010

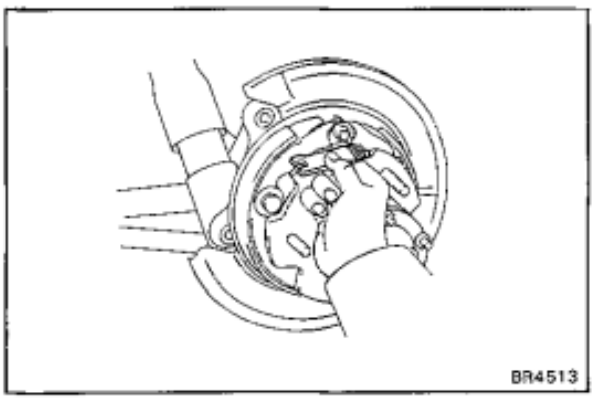

5. REMOVE SHOE STRUT WITH SPRING

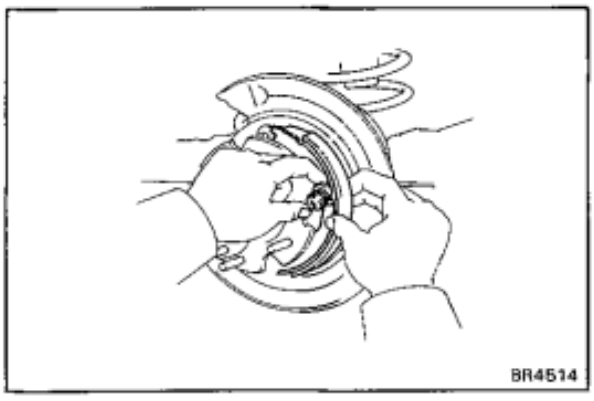

6. REMOVE REAR SHOE, ADJUSTER AND TENSION SPRING

(a) Slide out the rear shoe, and remove the rear shoe and adjuster.

(b) Remove the lower side tension spring.

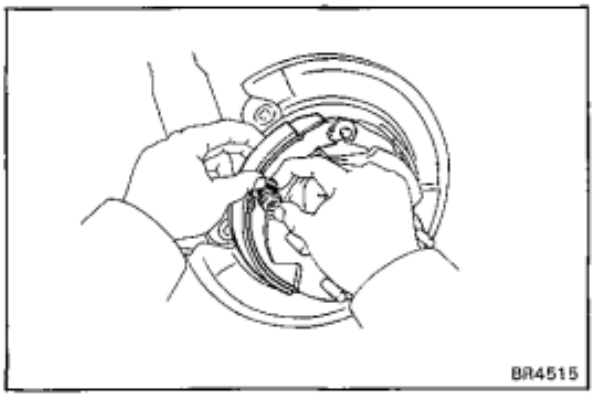

7. REMOVE FRONT SHOE

(a) Slide out the front shoe.

(b) Disconnect the parking brake cable from the parking brake shoe lever.

(c) Remove the cups, springs and pins.

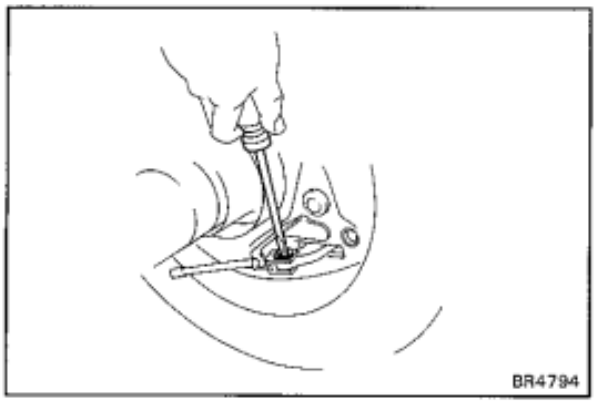

8. IF NECESSARY, REMOVE AND DISASSEMBLE PARKING BRAKE BELLCRANK ASSEMBLY

(a) Using a screwdriver, remove the C-washer.

(b) Remove the pin and disconnect the parking brake cable No. 2 from the bellcrank.

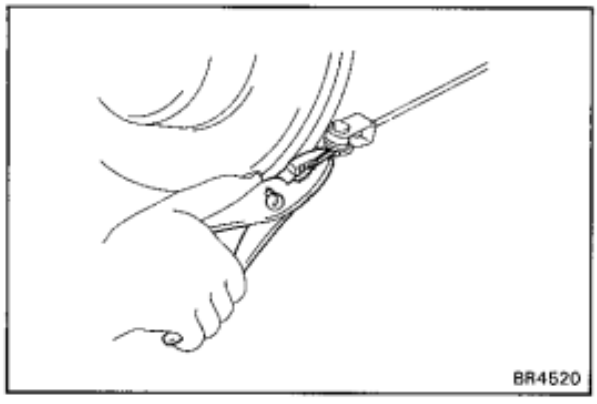

(c) Remove the clip.

(d) Remove the pin and wave washer, then disconnect the parking brake cable.

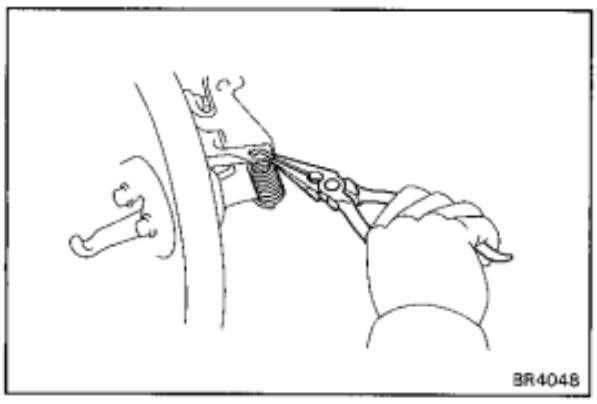

(e) Remove the two tension springs.

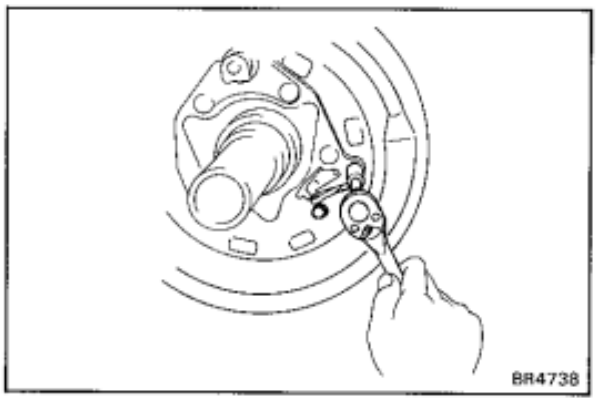

(f) Remove the two bolts and parking brake bellcrank assembly.

(g) Remove the boot from parking brake bellcrank bracket.

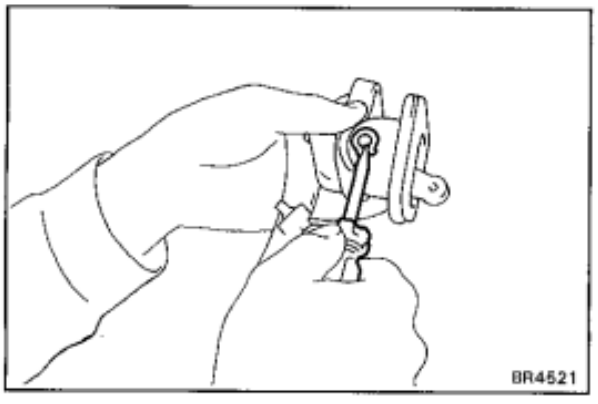

(h) Using a screwdriver, remove the C-washer and pin.

(i) Remove the parking brake bellcrank from the crank bracket.

(j) Remove the boot.

INSPECTION AND REPAIR OF PARKING BRAKE COMPONENTS

1. INSPECT DISASSEMBLED PARTS

Inspect the disassembled parts for wear, rust or damage.

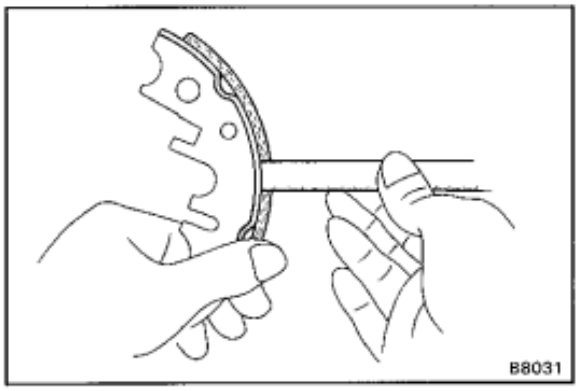

2. MEASURE BRAKE SHOE LINING THICKNESS

Minimum thickness: 1.0 mm (0.039 in.)

Standard thickness: 4.0 mm (0.157 in.)

If the shoe lining is less than minimum or shows sign of uneven wear, replace the parking brake shoes.

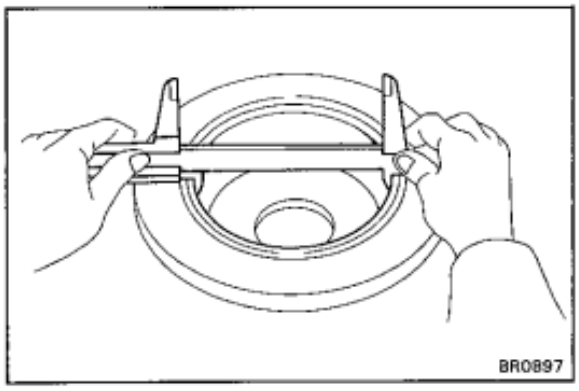

3. MEASURE BRAKE DISC INSIDE DIAMETER

Maximum inside diameter: 211 mm (8.31 in.)

Standard inside diameter: 210 mm (8.27 in.)

If the disc is scored or worn, the brake disc may be lathed to the maximum inside diameter.

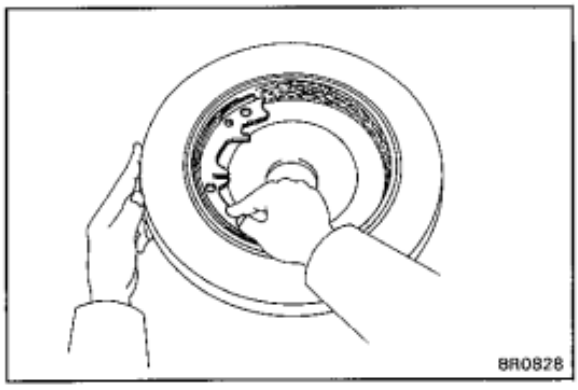

4. INSPECT PARKING BRAKE SHOE LINING AND DISC FOR PROPER CONTACT

If the contact between the brake lining and disc is improper, repair the lining with a brake shoe grinder, or replace the brake shoe assembly.

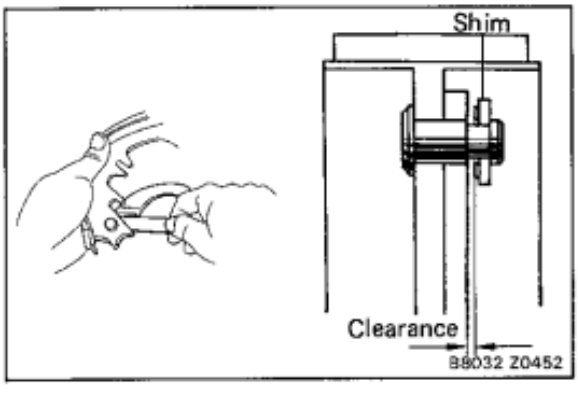

5. MEASURE CLEARANCE BETWEEN PARKING BRAKE SHOE AND LEVER

Using a feeler gauge, measure the clearance.

Standard clearance: Less than 0.35 mm (0.0138 in.)

If the clearance is not within specification, replace the shim with one of the correct size.

Thickness mm (in.)	
0.3 (0.012) 0.6 (0.024)	0.9 (0.035)

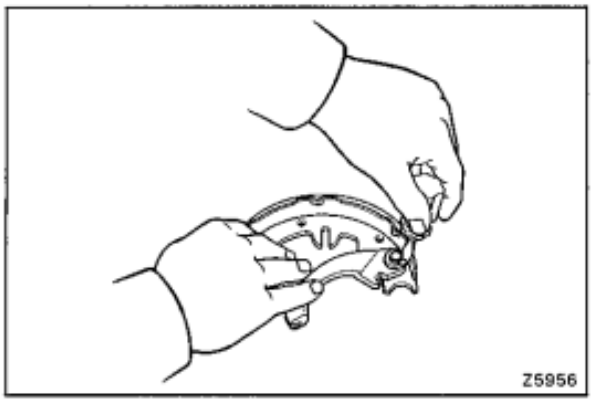

6. IF NECESSARY, REPLACE SHIM

(a) Remove the parking brake shoe lever, and install the correct size shim.

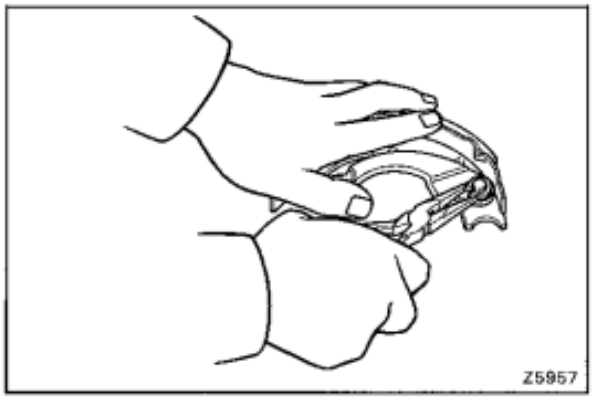

(b) Install the parking brake shoe lever with a new C-washer.

(c) Remeasure the clearance.

ASSEMBLY OF PARKING BRAKE

(See page BR-93)

HINT: Assemble the parts in the correct direction as shown.

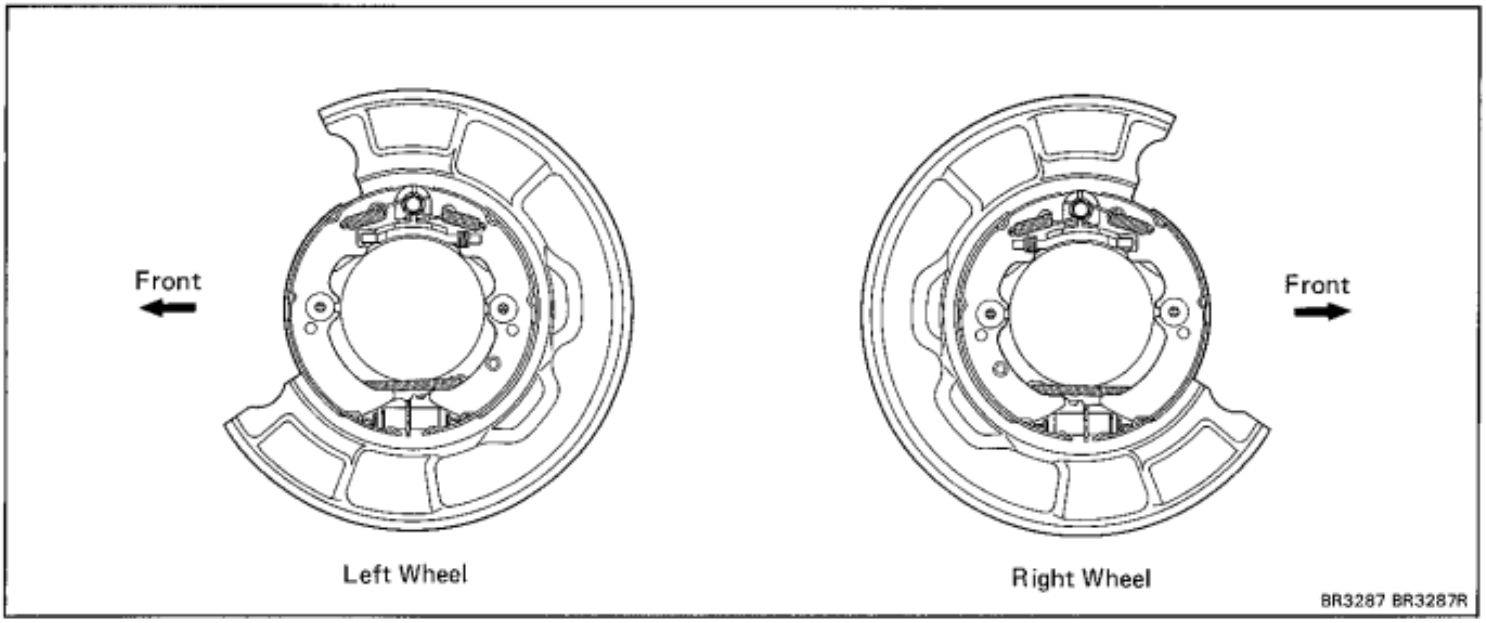

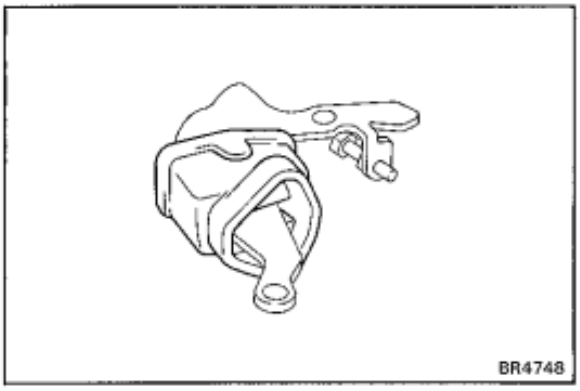

1. **IF NECESSARY, ASSEMBLE AND INSTALL PARKING BRAKE BELLCRANK ASSEMBLY**
   (a) Apply lithium soap base glycol grease to the boot.
   (b) Install the boot to the parking brake bellcrank.

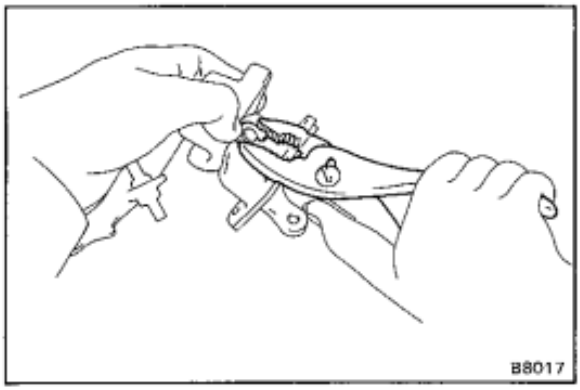

   (c) Install the parking brake bellcrank to the bellcrank bracket.
   (d) Install the pin with the new C-washer.

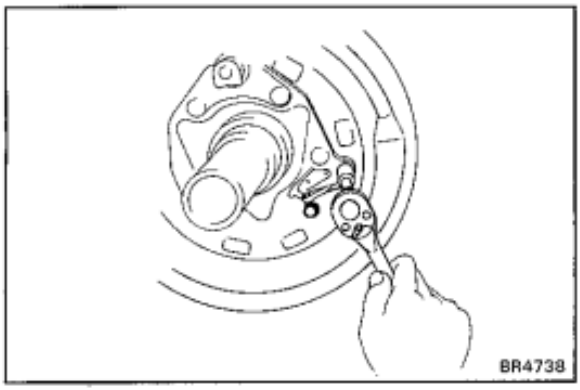

   (e) Install the parking brake bellcrank assembly on the backing plate with two bolts.
   (f) Torque the bolts.

   Torque: 130 kg-cm (9 ft-lb, 13 N·m)

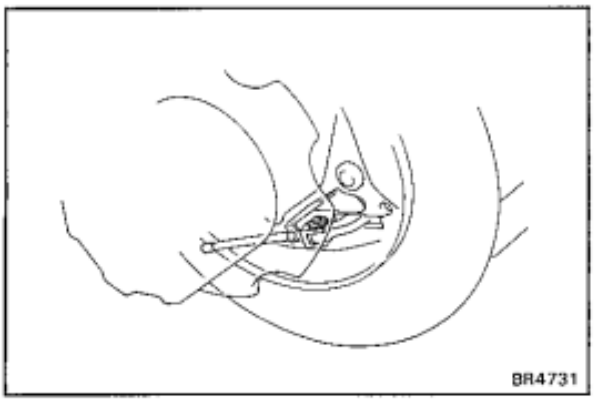

(g) Using pliers, connect parking brake cable No. 2 to the bellcrank with the pin and a new C-washer.

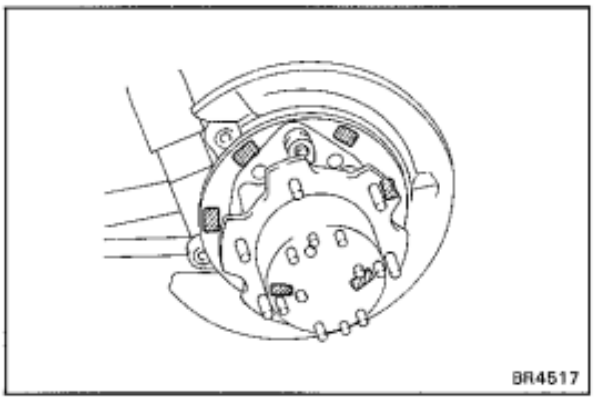

2. APPLY HIGH TEMPERATURE GREASE ON BACKING PLATE AS SHOWN

Apply high temperature grease to the sliding surfaces of the shoe.

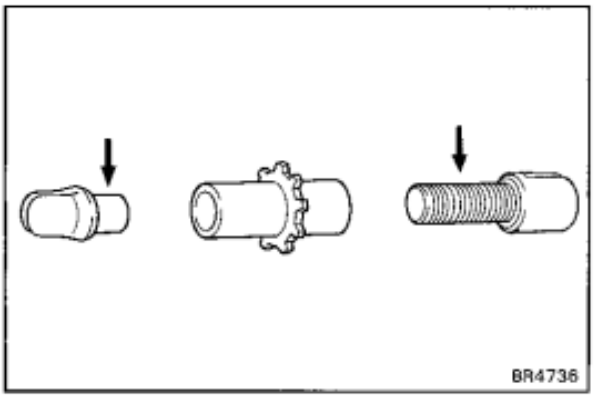

3. APPLY HIGH TEMPERATURE GREASE TO ADJUSTER AS SHOWN

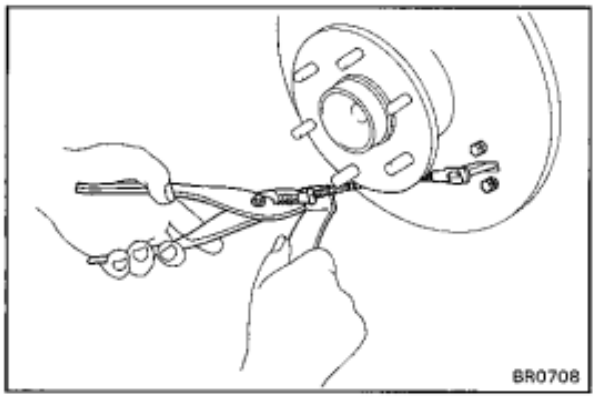

4. CONNECT PARKING BRAKE CABLE TO FRONT SHOE

Connect the parking brake cable to the front shoe.

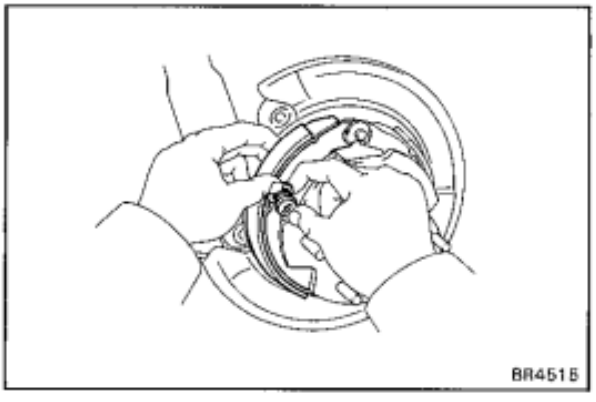

5. INSTALL FRONT SHOE

(a) Install the pins, cups and shoe hold-down springs to the backing plate.

(b) Slide in the front shoe between the cup and the backing plate.

NOTICE: Do not allow oil or grease to get on the rubbing face.

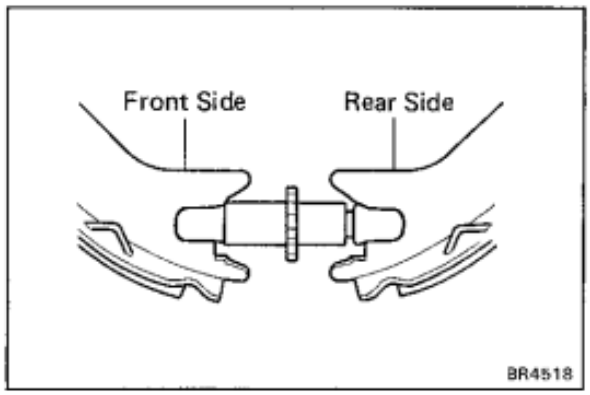

6. **INSTALL TENSION SPRINGS, REAR SHOE AND ADJUSTER**

(a) Install the lower side tension spring to the front shoe.

(b) Install the rear shoe to the tension spring.

(c) Install the adjuster between the front and rear shoes.

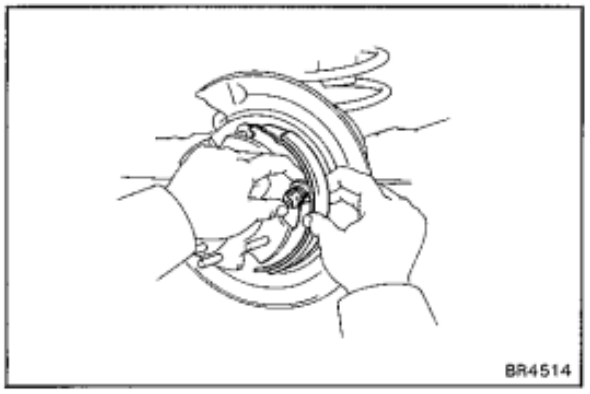

(d) Slide in the front shoe between the shoe hold-down spring cup and the backing plate.

NOTICE: Do not allow oil or grease on the rubbing face.

(e) Using pliers, install the tension spring.

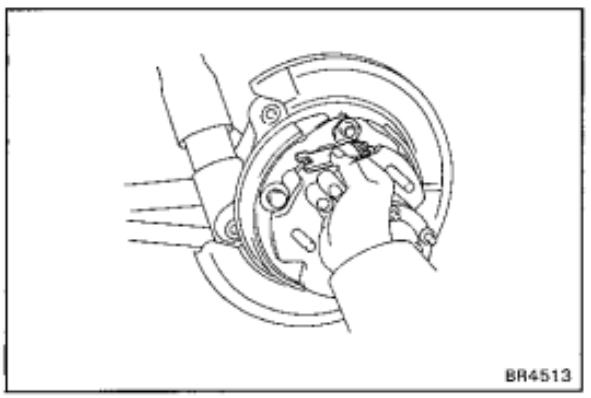

7. **INSTALL STRUT WITH SPRING**

Install the strut and spring with spring facing rearward.

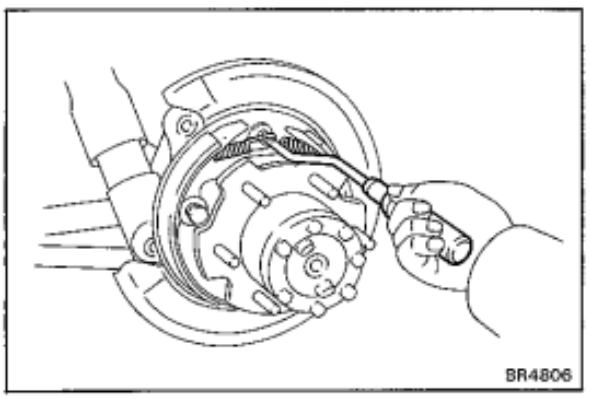

8. **INSTALL SHOE RETURN SPRINGS**

Using SST, install the front return spring and then install the rear return spring.

SST 09718-20010

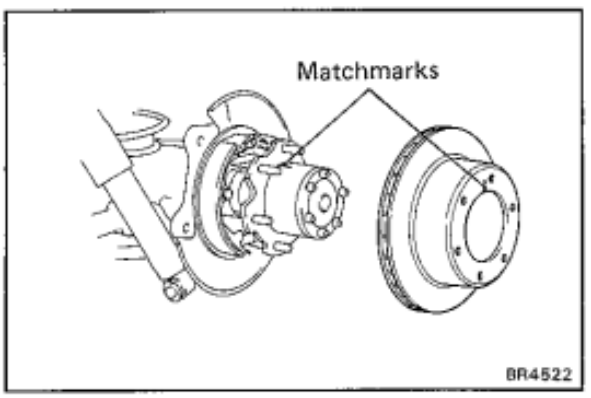

9. **INSTALL ROTOR DISC**

Align the matchmarks and install the rotor disc.

HINT: If there aren't matchmarks, align the groove on the rear axle shaft flange with the service hole on the disc, then install the rotor disc.

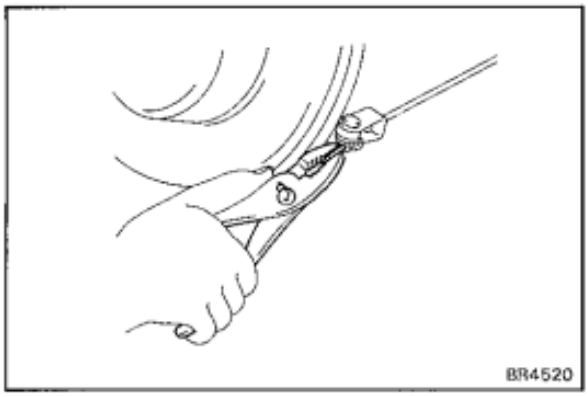

10. CONNECT PARKING BRAKE CABLE

(a) Connect the parking brake cable to the bellcrank with the pin and wave washer.

(b) Using pliers, install the clip.

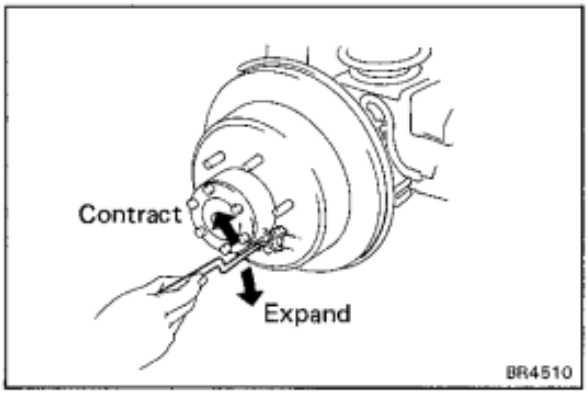

11. ADJUST PARKING BRAKE SHOE CLEARANCE

(a) Temporarily install the hub nuts.

(b) Remove the hole plug.

(c) Turn the adjuster and expand the shoes until rotor disc locks.

(d) Return the adjuster eight notches.

(e) Install the hole plug.

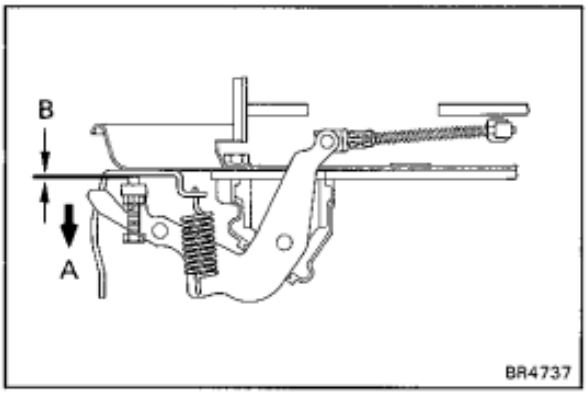

12. IF NECESSARY ADJUST BELLCRANK

(a) Lightly pull the bellcrank in direction A.

(b) In this condition, turn the adjusting bolt dimension B will be 0.5 — 0.9 mm (0.02 — 0.04 in.).

(c) Lock the adjust bolt with the lock nut.

Torque: 55 kg-cm (47 in-lb, 5.4 N·m)

(d) Install the two tension springs.

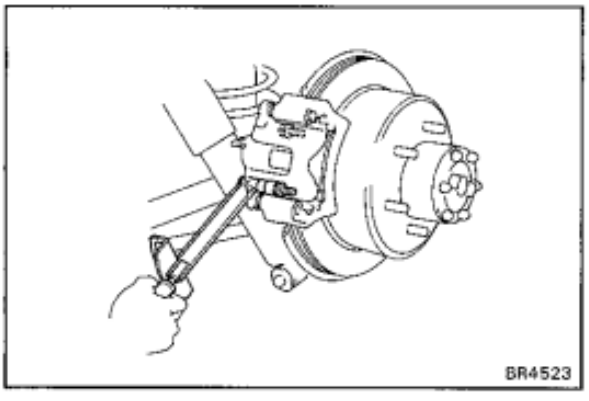

13. INSTALL REAR DISC BRAKE ASSEMBLY

Install the disc brake assembly and torque the two mounting bolts.

Torque: 1,050 kg-cm (76 ft-lb, 103 N·m)

14. INSTALL REAR WHEEL

15. BEDDING DOWN PARKING BRAKE SHOES AND DISC

(a) Drive the vehicle at about 50 km/h (31 mph) on a safe, level and dry road.

(b) With the parking brake release button pushed in, pull on the lever with 9 kg (19.8 lb, 88 N) of force.

(c) Drive the vehicle for about 400 meters (0.25 mile) in this condition.

(d) Repeat this procedure two or three times.

16. RECHECK AND ADJUST PARKING BRAKE LEVER TRAVEL

LOAD SENSING PROPORTIONING VALVE (LSPV)

COMPONENTS

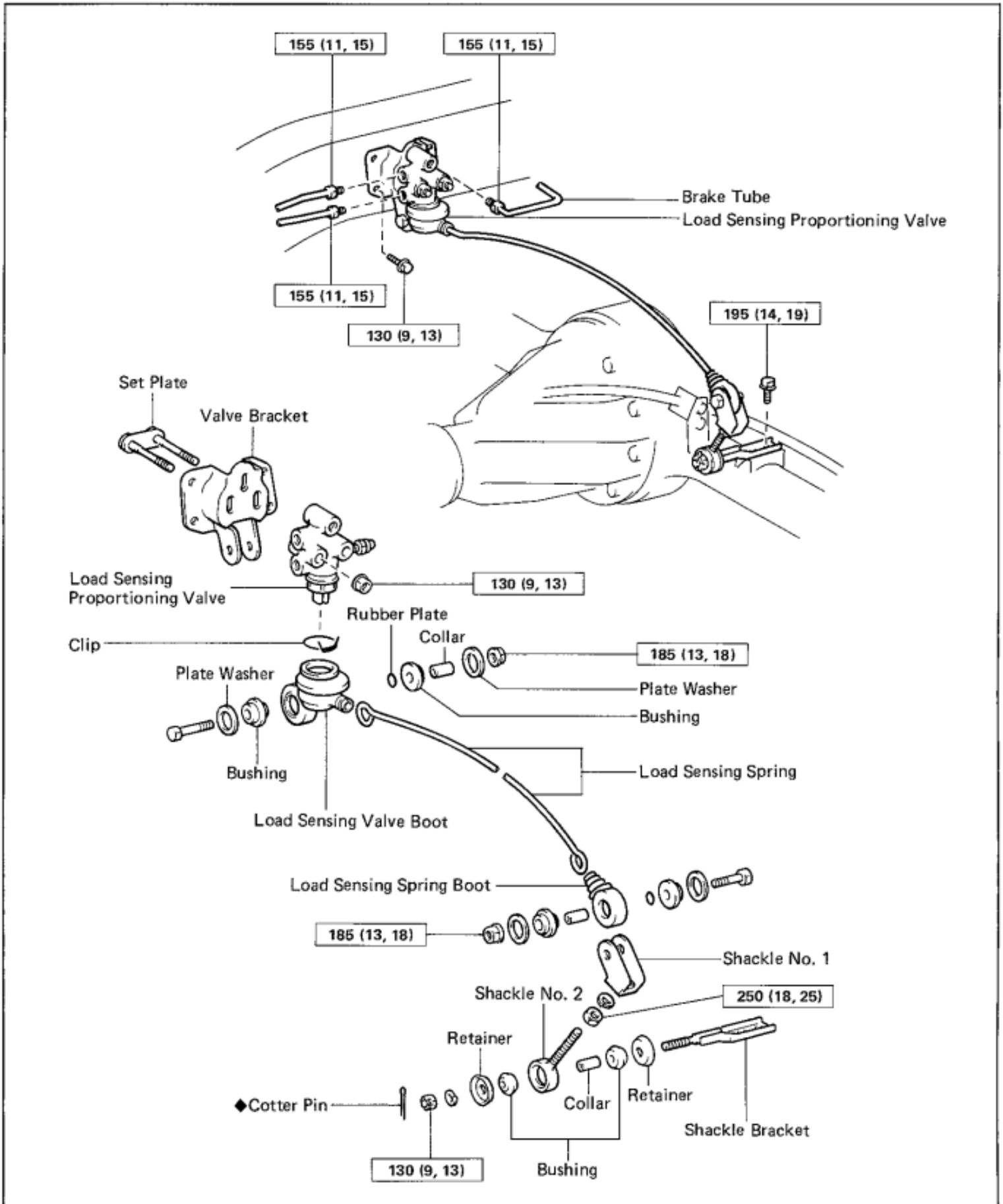

kg-cm (ft-lb, N·m) : Specified torque

◆ Non-reusable part

9R4739

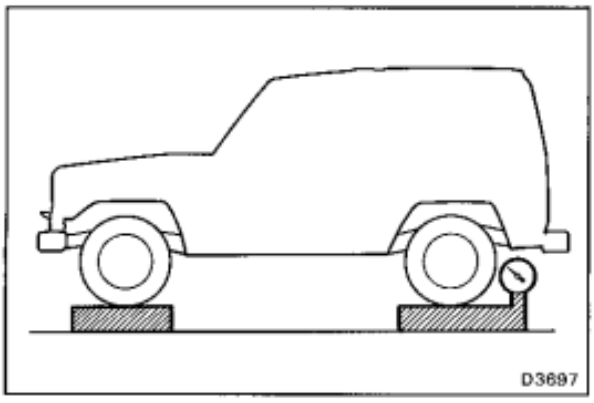

CHECK AND ADJUSTMENT OF FLUID PRESSURE

1. SET REAR AXLE LOAD

Rear axle load (include vehicle weight):
1,010 kg (2,227 lb)

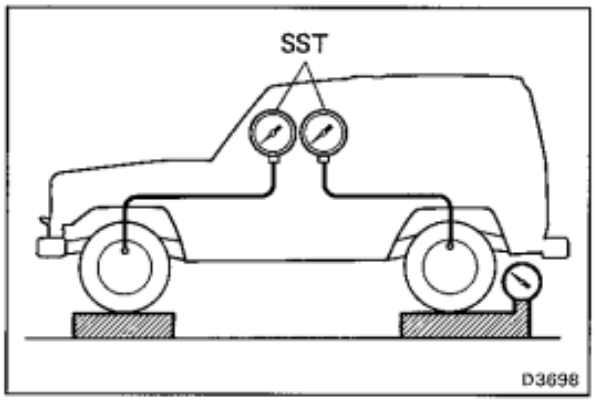

2. INSTALL LSPV GAUGE (SST) AND BLEED AIR

SST 09709-29017

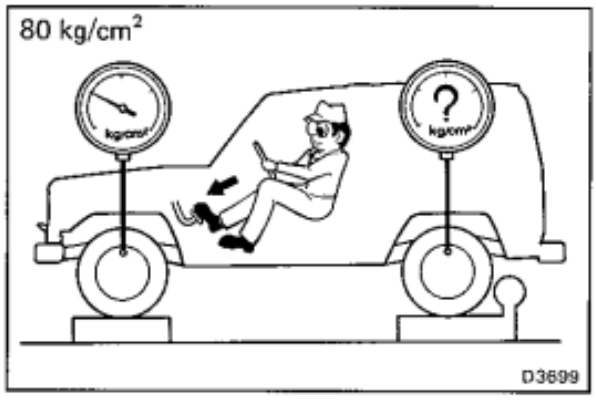

3. RAISE FRONT BRAKE PRESSURE TO 80 kg/cm² (1,138 psi, 7,845 kPa) AND CHECK REAR BRAKE PRESSURE

Rear brake pressure:
Heavy-Duty:
41.2 ± 6 kg/cm² (586 ± 85 psi, 4,040 ± 588 kPa)

Light-Duty:
40.8 ± 6 kg/cm² (580 ± 85 psi, 4,001 ± 588 kPa)

HINT: The brake pedal should not be depressed twice and/or returned while setting to the specified pressure.

Read the value of rear brake pressure two seconds after adjusting the specified fluid pressure.

If the brake pressure is incorrect, adjust the fluid pressure.

4. IF NECESSARY, ADJUST FLUID PRESSURE

(a) Adjust the length of No. 2 shackle.

Low pressure — Lengthen A
High pressure — Shorten A

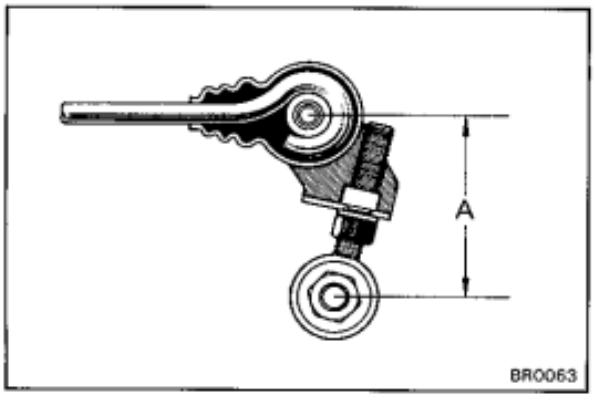

Initial set length:
Heavy-Duty: 78 mm (3.07 in.)
Light-Duty: 90 mm (3.54 in.)

Adjusting range:
Heavy-Duty: 72 — 84 mm (2.83 — 3.31 in.)
Light-Duty: 84 — 96 mm (3.31 — 3.78 in.)

HINT: One turn of the No. 2 shackle changes the fluid pressure about following specification.

Heavy-Duty: 0.84 kg/cm² (12.0 psi, 82.4 kPa)
Light-Duty: 0.67 kg/cm² (9.5 psi, 65.7 kPa)

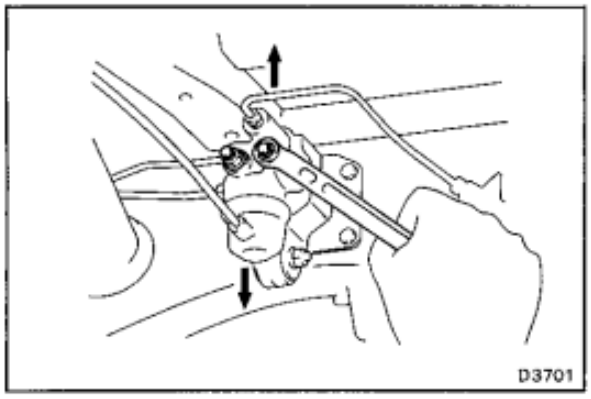

(b) In the event pressure cannot be adjusted by the No.2 shackle, raise or lower the valve body.
Low pressure — Lower
High pressure — Raise

(c) Torque the nuts.

Torque: 130 kg-cm (9 ft-lb, 13 N·m)

(d) Adjust the length of the No.2 shackle again.

If it cannot be adjusted, inspect the valve housing.

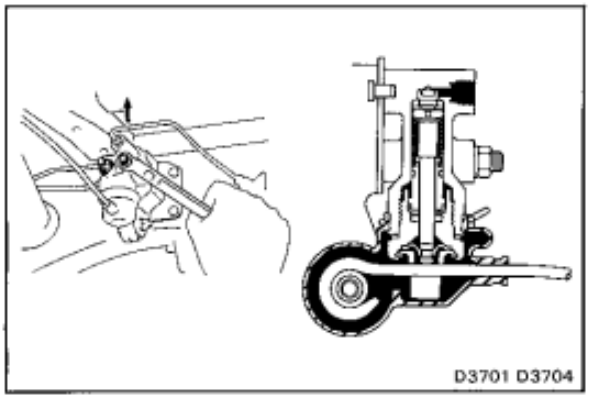

6. IF NECESSARY, CHECK VALVE BODY

(a) Assemble the valve body in the uppermost position.

HINT: When the brakes are applied, the piston will move down about 1 mm (0.04 in.). Even at this time, the piston should not make contact with or move the load sensing spring.

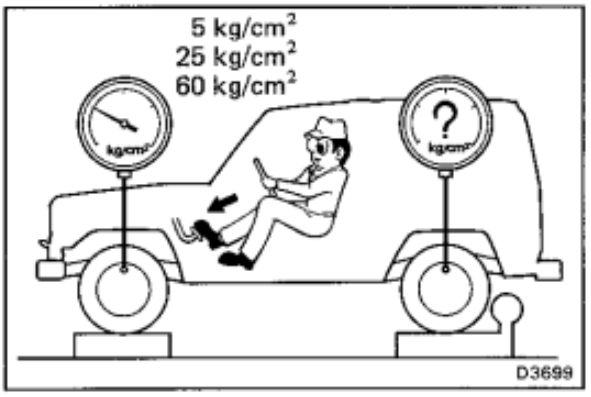

(b) In this position, check the rear brake pressure.

kg/cm² (psi, kPa)

Front brake pressure	Rear brake pressure
5 (71, 490)	5 (71, 490)
25 (356, 2,452)	8.0 — 12.0 (114 — 171, 785 — 1,177)
60 (853, 5,884)	15.3 — 22.3 (218 — 317, 1,500 — 2,187)

If the measured value is not within standard, replace the valve body.

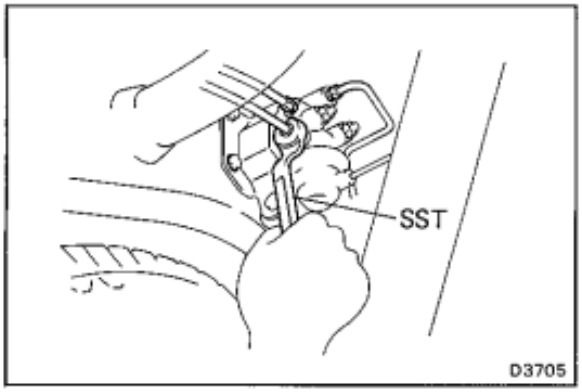

REMOVAL OF LSPV ASSEMBLY

(See page BR-102)

1. DISCONNECT BRAKE TUBES

Using SST, disconnect the brake tubes from the valve body.

SST 09751-36011

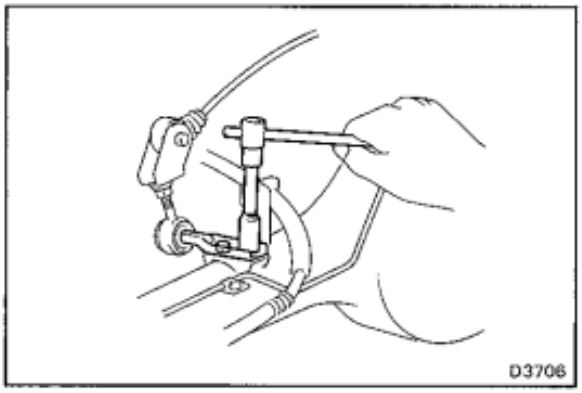

2. REMOVE LSPV ASSEMBLY

(a) Remove the two bolts and remove the shackle bracket.

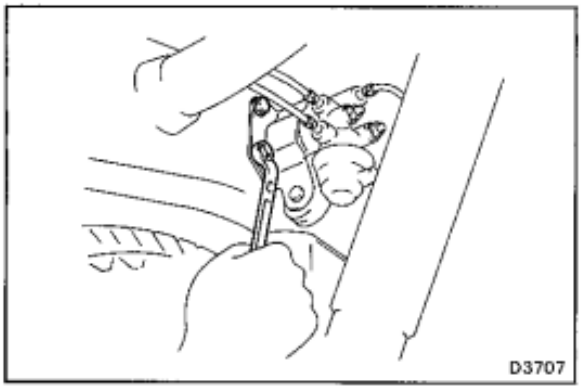

(b) Remove the valve bracket mounting bolts and remove the LSPV assembly.

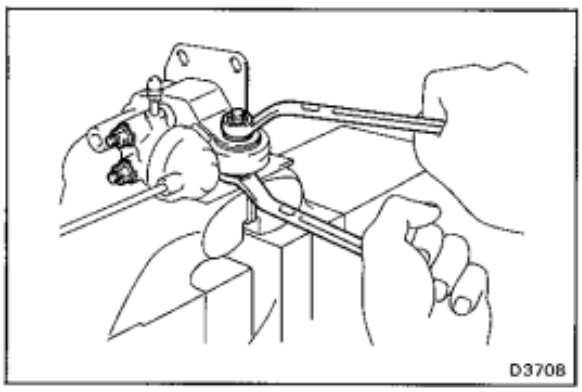

DISASSEMBLY OF LOAD SENSING SPRING ASSEMBLY

1. REMOVE VALVE BRACKET

Remove the three nuts, and remove the valve bracket.

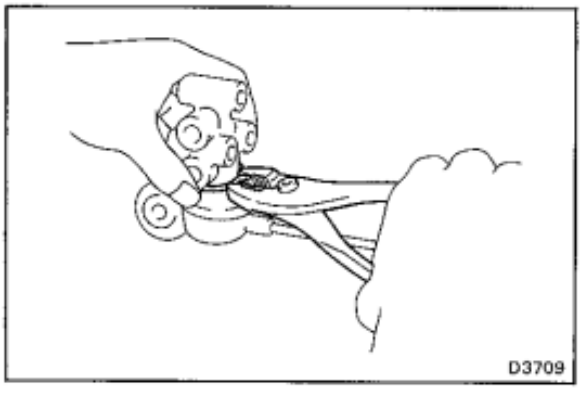

2. DISCONNECT SPRING FROM VALVE

Using pliers, remove the clip and spring from the valve.

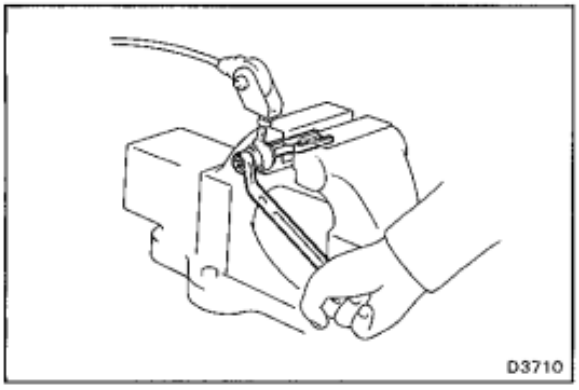

3. REMOVE SHACKLE BRACKET

(a) Remove the cotter pin.

(b) Remove the nut, and remove the shackle bracket, two retainers, two bushings and a collar.

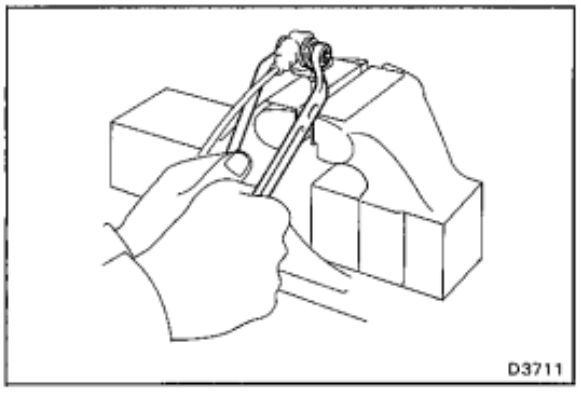

4. REMOVE SHACKLE NO.1 AND NO.2

Remove the nut and bolt, and then remove the shackle No. 1 and No. 2 and two plate washers from the load sensing spring assembly.

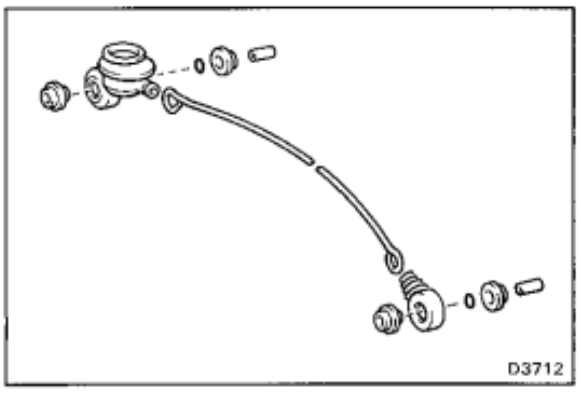

5. DISASSEMBLE LOAD SENSING SPRING

Disassemble the following parts.

(a) Bushings

(b) Collars

(c) Rubber plates

(d) Load sensing valve boot

(e) Load sensing spring boot

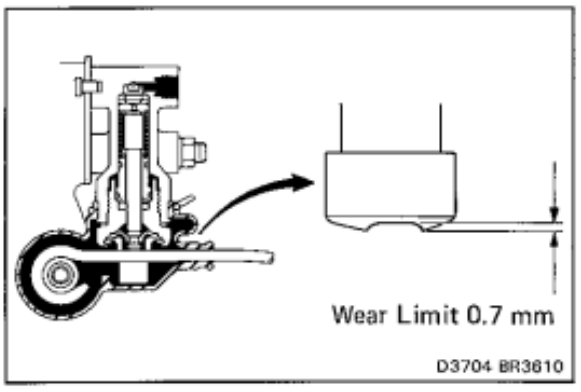

INSPECTION OF LSPV

INSPECT VALVE PISTON PIN AND LOAD SENSING SPRING CONTACT SURFACE FOR WEAR

Wear limit: 0.7 mm (0.028 in.)

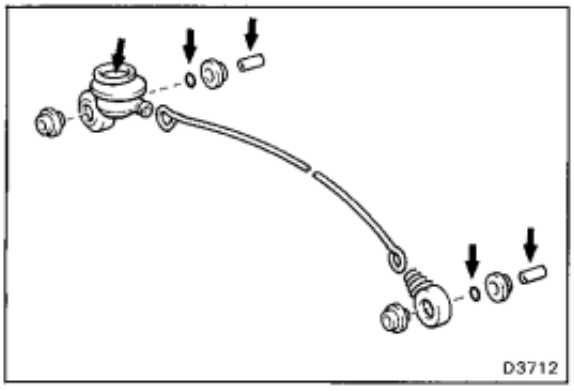

ASSEMBLY OF LSPV ASSEMBLY

(See page BR-102)

1. ASSEMBLE FOLLOWING PARTS TO LOAD SENSING SPRING

(a) Load sensing valve boot

(b) Load sensing spring boot

(c) Collars

(d) Rubber plates

(e) Bushings

HINT:

- Apply lithium soap base glycol grease to all rubbing areas.
- Do not mistake the valve side for the shackle side of the load sensing spring.

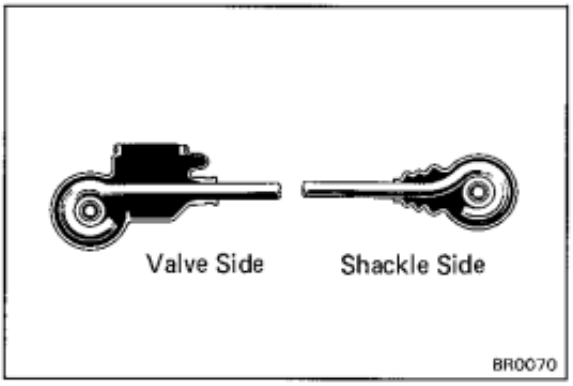

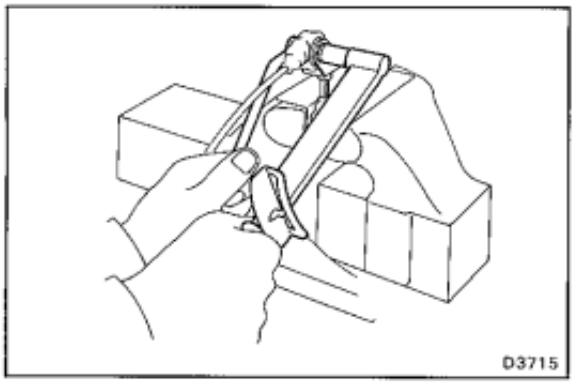

2. INSTALL SHACKLE NO.1 AND NO.2 TO LOAD SENSING SPRING

Install the shackle to the load sensing spring through the two plate washers.

Torque: 185 kg-cm (13 ft-lb, 18 N·m)

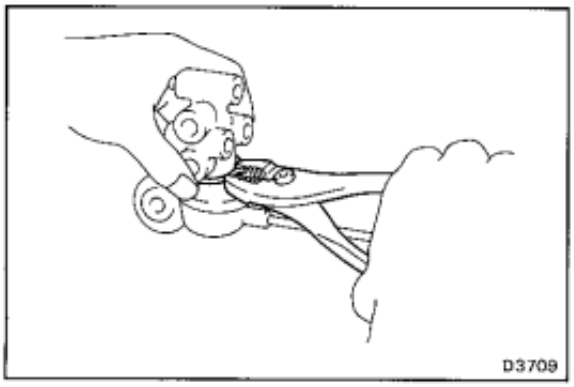

3. INSTALL LOAD SENSING SPRING TO VALVE BODY

Install the load sensing spring assembly to the load sensing valve with a clip.

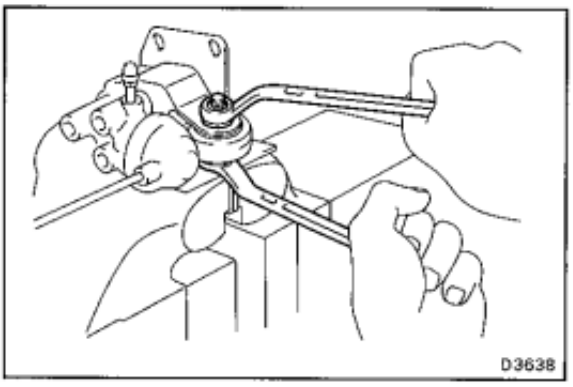

4. INSTALL VALVE BRACKET

(a) Install the load sensing spring assembly to the bracket, and torque the bolt and nut of load sensing spring boot through the two plate washers.

Torque: 185 kg-cm (13 ft-lb, 18 N·m)

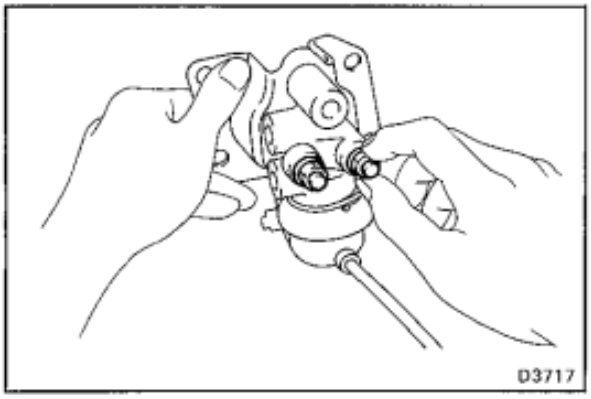

(b) Install the set plate to the valve assembly and temporarily tighten the two valve body mounting nuts.

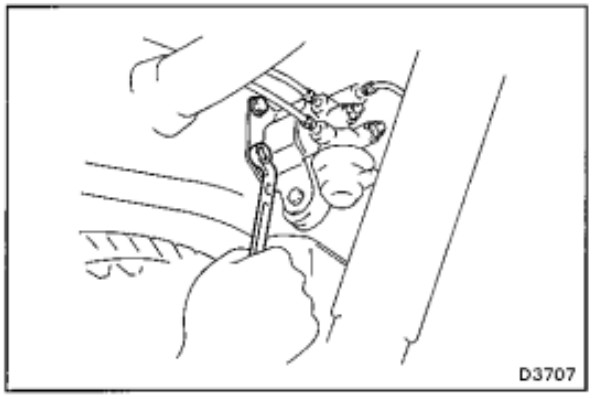

INSTALLATION OF LSPV

1. INSTALL LSPV ASSEMBLY

(a) Install the LSPV assembly to the No. 2 valve bracket with four bolts.

Torque: 130 kg-cm (9 ft-lb, 13 N·m)

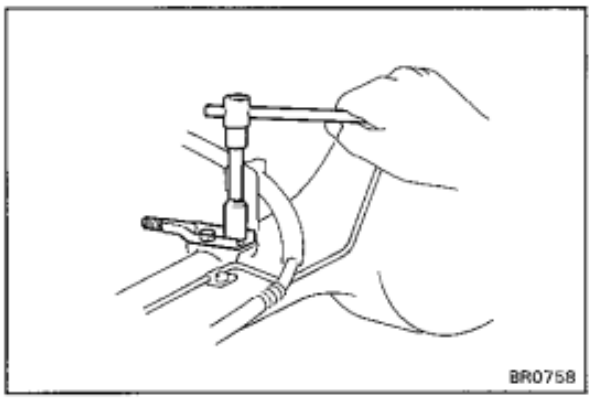

(b) Install the shackle bracket to rear axle housing with two bolts.

Torque: 195 kg-cm (14 ft-lb, 19 N·m)

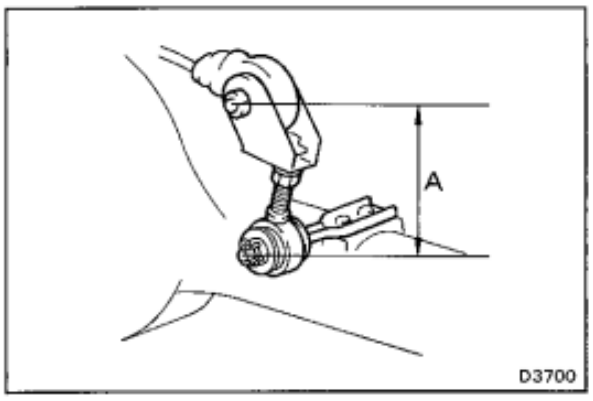

2. CONNECT SHACKLE NO.2 TO BRACKET

(a) Set dimension A by turning shackle No. 2.

Initial set:

Heavy-Duty: 78 mm (3.07 in.)
Light-Duty: 90 mm (3.54 in.)

(b) Tighten the lock nut.

Torque: 250 kg-cm (18 ft-lb, 25 N·m)

(c) Install the two bushings and a collar to the load sensing spring shackle.

(d) Install the load sensing spring to the shackle bracket with the two retainers and a nut.

Torque: 130 kg-cm (9 ft-lb, 13 N·m)

(e) Install a new cotter pin.

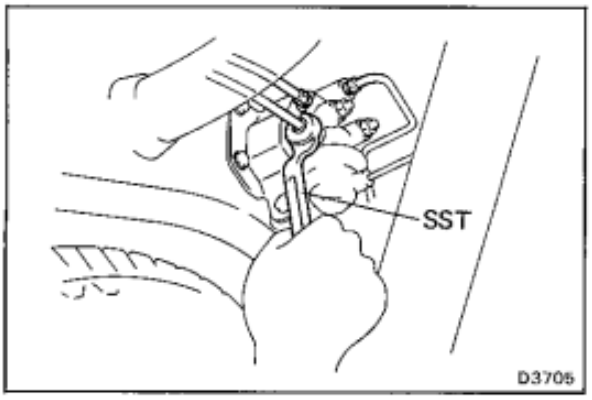

3. **CONNECT BRAKE TUBES**

Using SST, connect the brake tubes.

SST 09751-36011

Torque: 155 kg-cm (11 ft-lb, 15 N·m)

4. **SET REAR AXLE LOAD**
(See page BR-103)

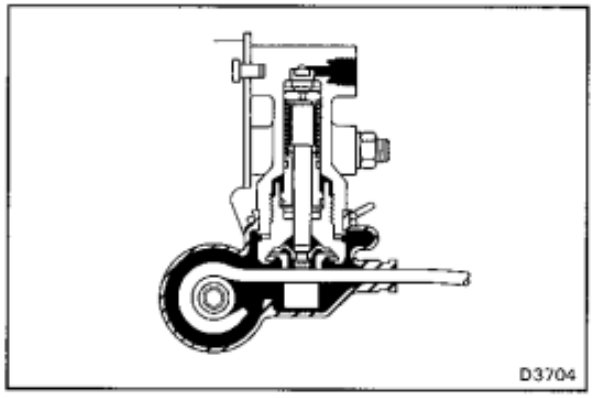

5. **SET VALVE BODY**

(a) When pulling down the load sensing spring, confirm that the valve piston moves down smoothly.

(b) Position the valve body so that the valve piston lightly contacts the load sensing spring.

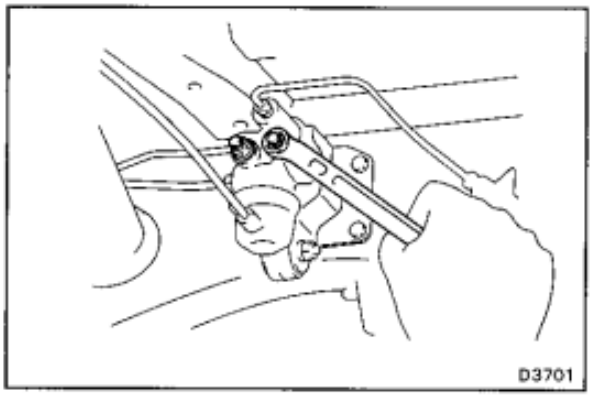

(c) Tighten the valve body mounting nuts.

Torque: 130 kg-cm (9 ft-lb, 13 N·m)

6. **BLEED BRAKE SYSTEM**
(See page BR-7)

7. **CHECK FOR FLUID LEAKAGE**

8. **CHECK AND ADJUST LSPV FLUID PRESSURE**
(See page BR-103)

BRAKE SYSTEM

Specifications

Brake pedal	Pedal height (from asphalt sheet)		161 – 171 mm	6.34 – 6.73 in.
	Pedal freeplay		3 – 6 mm	0.12 – 0.24 in.
	Pedal reserve distance at 50 kg (110.2 lb, 490 N)			
	Front disc type		More than 68 mm (2.68 in.)	
	Front drum type			
	• Heavy-duty			
	70, 73 series		More than 100 mm (3.94 in.)	
	75 series		More than 90 mm (3.54 in.)	
	• Light-duty		More than 105 mm (4.13 in.)	
Brake booster	Booster push rod to piston clearance			
	at Idling vacuum		0.1 – 0.5 mm	0.004 – 0.020 in.
	w/ SST		0 mm	0 in.
Vacuum pump	Blade	Height	16.50 mm	0.6496 in.
		Width	4.95 mm	0.1949 in.
		Lengh	44.96 mm	1.7701 in.
	Rotation play		1.0 mm	0.039 in.
Front brake (Drum)	Drum inside diameter			
	• Heavy-duty	STD	295.0 mm	11.614 in.
		Limit	297.0 mm	11.693 in.
	• Light-duty	STD	279.4 mm	11.000 in.
		Limit	281.4 mm	11.079 in.
Front brake (Dsic)	Pad thickness STD		9.5 mm	0.374 in.
	Limit	(Australia)	4.0 mm	0.157 in.
		(Ex. Australia)	1.0 mm	0.039 in.
	Disc thickness			
	• Light-duty rear drum	STD	12.5 mm	0.492 in.
		Limit	11.5 mm	0.453 in.
	• Ex. above model	STD	20.0 mm	0.787 in.
		Limit	18.0 mm	0.709 in.
	Disc runout	Limit	0.15 mm	0.0059 in.
Rear brake (Drum)	Drum inside diameter			
	• Heavy-duty	STD	295.0 mm	11.614 in.
		Limit	297.0 mm	11.693 in.
	• Light-duty	STD	254.0 mm	10.000 in.
		Limit	256.0 mm	10.079 in.
	Lining thickness			
	• Heavy-duty	STD	6.5 mm	0.256 in.
		Limit	1.5 mm	0.059 in.
	• Light-duty	STD	5.0 mm	0.197 in.
		Limit	1.0 mm	0.039 in.
Rear brake (Disc)	Pad thickness	STD	10.0 mm	0.394 in.
		Limit	1.0 mm	0.039 in.
	Disc thickness	STD	18.0 mm	0.710 in.
		Limit	16.0 mm	0.630 in.
	Disc runout	Limit	0.15 mm	0.0059 in.
Parking brake	Rear disc inner diameter	STD	210 mm	8.27 in.
		Limit	211 mm	8.31 in.
	Lining thickness	STD	4.0 mm	0.157 in.
		Limit	1.0 mm	0.039 in.
	Lever travel at 20 kg (44.1 lb, 196 N)		7 – 9 clicks	
	Clearance between rear shoe and lever		Less than 0.35 mm (0.0138 in.)	
	Adjusting shim thickness		0.3 mm	0.012 in.
			0.6 mm	0.024 in.
			0.9 mm	0.035 in.

Torque Specifications

Part tightened	kg-cm	ft-lb	N·m
Bleeder plug	110	8	11
Piston stopper bolt × Master cylinder	100	7	10
Outlet plug × Master cylinder	450	33	44
Reservoir set bolt × Master cylinder	250	18	25
Master cylinder × Brake booster	130	9	13
Brake tube union nut	155	11	15
Brake booster × Pedal bracket	130	9	13
Brake booster clevis lock nut	375	27	37
Vacuum pump × Check valve	750	54	74
Vacuum pump × Engine	400	29	39
Vacuum pump end cover × Casing	80	69 in.-lb	7.8
Vacuum pump gear × Rotor shaft	1,125	81	110
Vacuum pump union bolt	140	10	14
Backing plate × Steering knuckle	1,100	80	108
Wheel cylinder × Backing plate	185	13	18
Wheel cylinder × Brake tube	155	11	15
Brake drum × Axle hub	70	61 in.-lb	6.9
Front brake wheel cylinder × Backing plate	185	13	18
Front brake tube clamp	80	69 in.-lb	7.8
Front disc × Front axle hub	475	34	47
Front disc brake cylinder × Steering knuckle	1,250	90	123
Drum brake backing plate × Rear axle housing	1,250	90	123
Parking brake bellcrank bracket × Backing plate	130	9	13
Rear brake wheel cylinder × Backing plate	100	7	10
Rear disc brake torque plate × Axle carrier	475	34	47
Rear disc brake cylinder installation bolt	255	18	25
LSP & BV bracket × Frame	195	14	19
LSP & BV × LSP & BV bracket	130	9	13
LSP & BV spring × LSP & BV bracket	185	13	18
LSP & BV spring × Shackle No.1	185	13	18
LSP & BV shackle lock nut	250	18	25
LSP & BV shackle × Shackle bracket	130	9	13
LSP & BV shackle bracket × Rear axle housing	195	14	19

PRECAUTION

Care must be taken to replace parts properly because they may affect the performance of the steering system and result in a driving hazard.

TROUBLESHOOTING

Problem	Possible cause	Remedy	Page
Hard steering	Tires improperly inflated	Inflate tires to proper pressure	A-15
	Insufficient lubricant	Lubricate suspension and steering linkage	
	Excessive caster	Check front wheel alignment	SA-3
	Steering system joints worn	Replace steering system joints	SR-72, 76
	Steering column binding	Inpsect steering column	SR-4
	Steering gear out of adjustment or broken	Adjust or repair steering gear	SR-20, 62
	Power steering belt loose	Adjust belt	SR-33
	Fluid level in reservoir low	Check reservoir	SR-34
	Power steering unit faulty	Check power steering unit	SR-38, 62
Poor return	Tires improperly inflated	Inflate tires to proper pressure	A-15
	Insufficient lubricant	Lubricate suspension	
	Wheel alignment incorrect	Check front wheel alignment	SA-3
	Steering column binding	Inspect steering column	SR-4
	Steering gear out of adjustment or broken	Adjust or repair steering gear	SR-20, 62
Excessive play	Front wheel bearing worn	Replace front wheel bearing	SA-29
	Main shaft yoke or intermediate shaft yoke worn	Replace main shaft or intermediate shaft	SR-4
	Steering system joints worn	Replace steering system joints	SR-72, 76
	Steering gear out of adjustment or broken	Adjust or repair steering gear	SR-20, 62
Abnormal noise	*Steering linkage loose*	Tighten steering linkage	SR-72, 76
	Steering system joints worn	Replace steering system joints	SR-72, 76
	Steering gear out of adjustment or broken	Adjust or repair steering gear	SR-20, 62

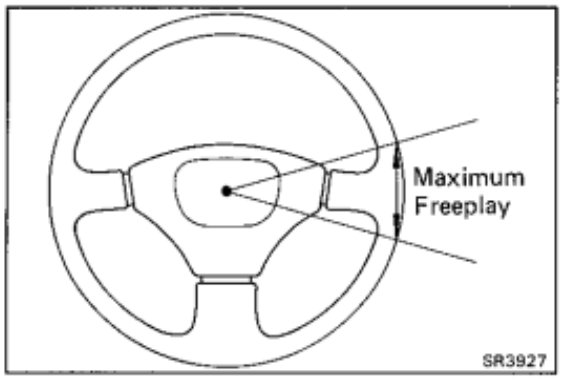

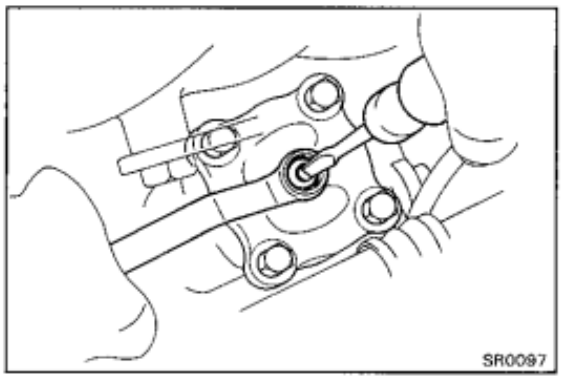

ON-VEHICLE INSPECTION

STEERING WHEEL FREEPLAY

1. **CHECK THAT STEERING WHEEL FREEPLAY IS CORRECT**

   With the vehicle stopped and pointed straight ahead, rock the steering wheel gently back and forth with light finger pressure. Freeplay should not exceed the maximum limit.

   Maximum play: 40 mm (1.58 in.)

   If incorrect, adjust or repair as required.

2. **POINT WHEELS STRAIGHT AHEAD**

3. **ADJUST STEERING GEAR HOUSING**

   (a) Loosen the lock nut.

   (b) Turn the adjusting screw clockwise to decrease wheel freeplay and counterclockwise to increase it.

   HINT: Turn the adjusting screw in small increments and check the wheel freeplay between each adjustment.

4. **CHECK THAT STEERING DOES NOT BIND**

   Turn the steering wheel half way around in both directions.

   Check that the freeplay is correct and steering is smooth and without rough spots.

5. **HOLD ADJUSTING SCREW AND TIGHTEN LOCK NUT**

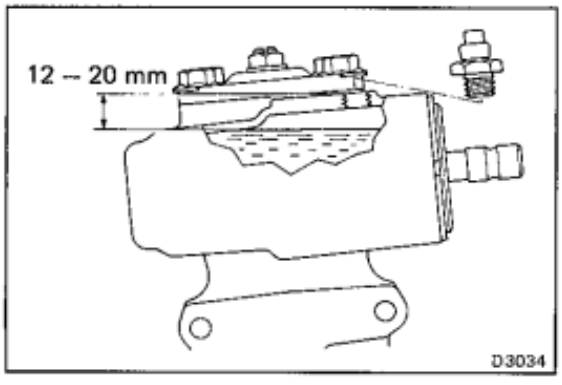

OIL LEVEL

CHECK STEERING GEAR HOUSING OIL LEVEL

Oil level: 12 – 20 mm (0.47 – 0.79 in.)

If low, fill with gear oil and check for leakage.

STEERING COLUMN

REMOVAL AND INSTALLATION OF STEERING COLUMN

Remove and install the parts as shown.

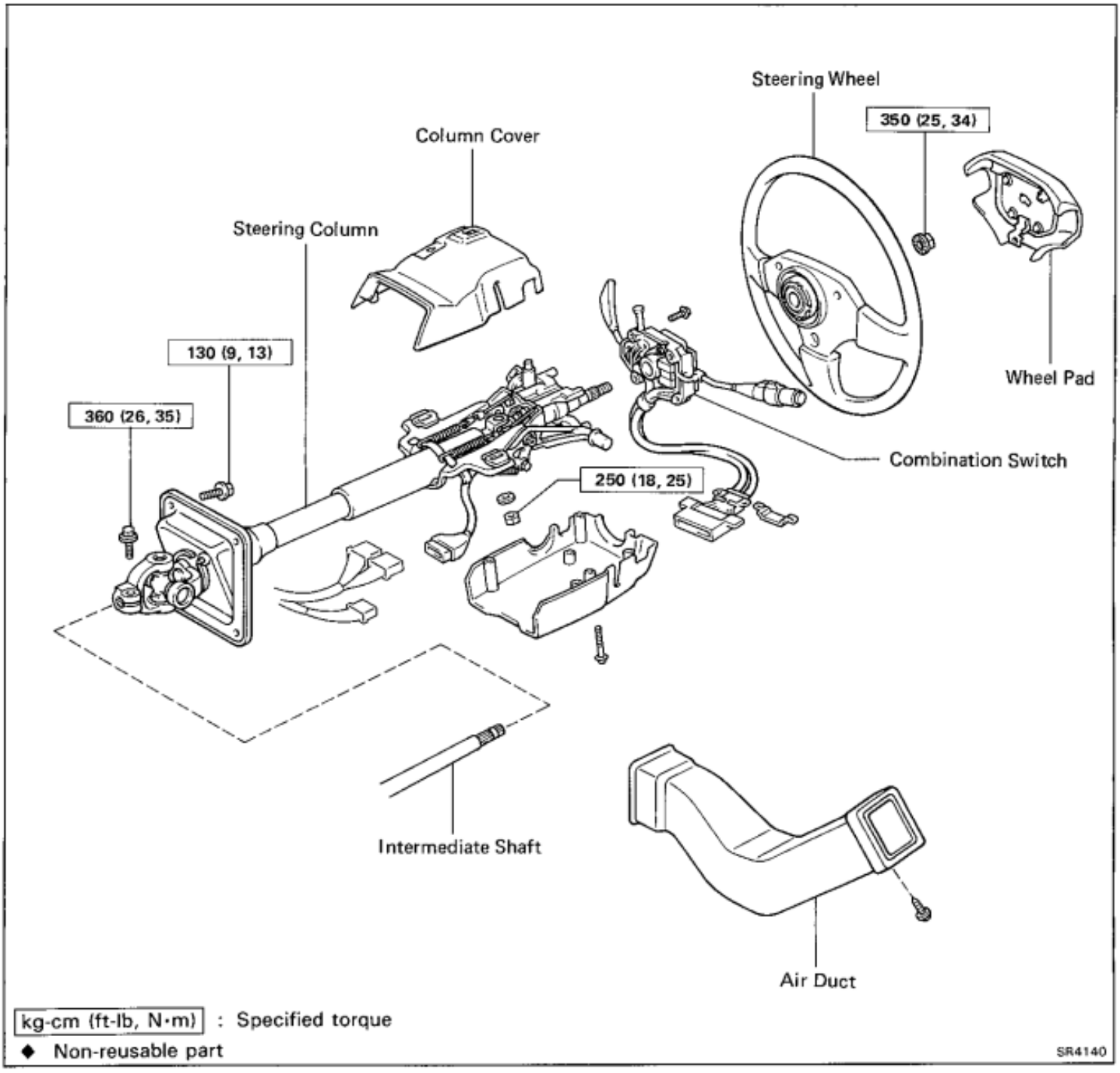

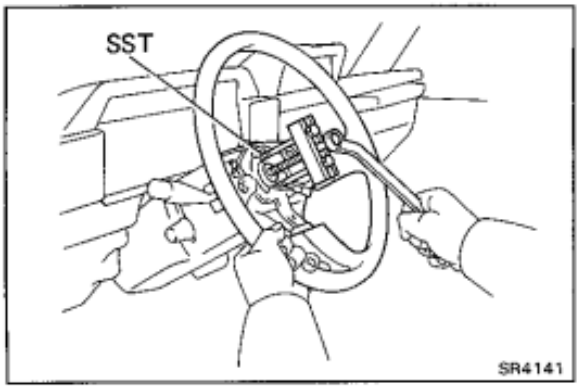

(MAIN POINT OF REMOVAL)

1. **REMOVE STEERING WHEEL**

   Using SST, remove the steering wheel.

   SST 09609-20011

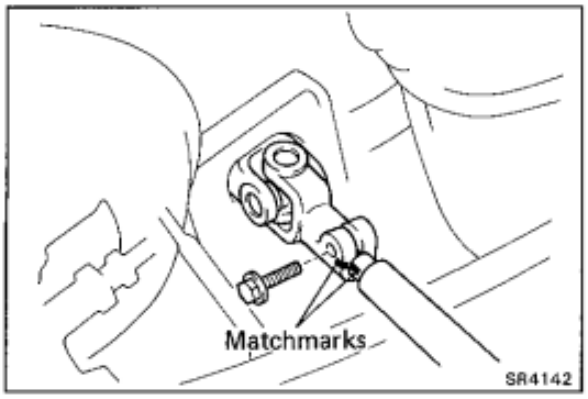

2. DISCONNECT UNIVERSAL JOINT

(a) Place matchmarks on the intermediate shaft and the universal joint.

(b) Disconnect the universal joint from the intermediate shaft.

Non-Tilt Steering Column

COMPONENTS

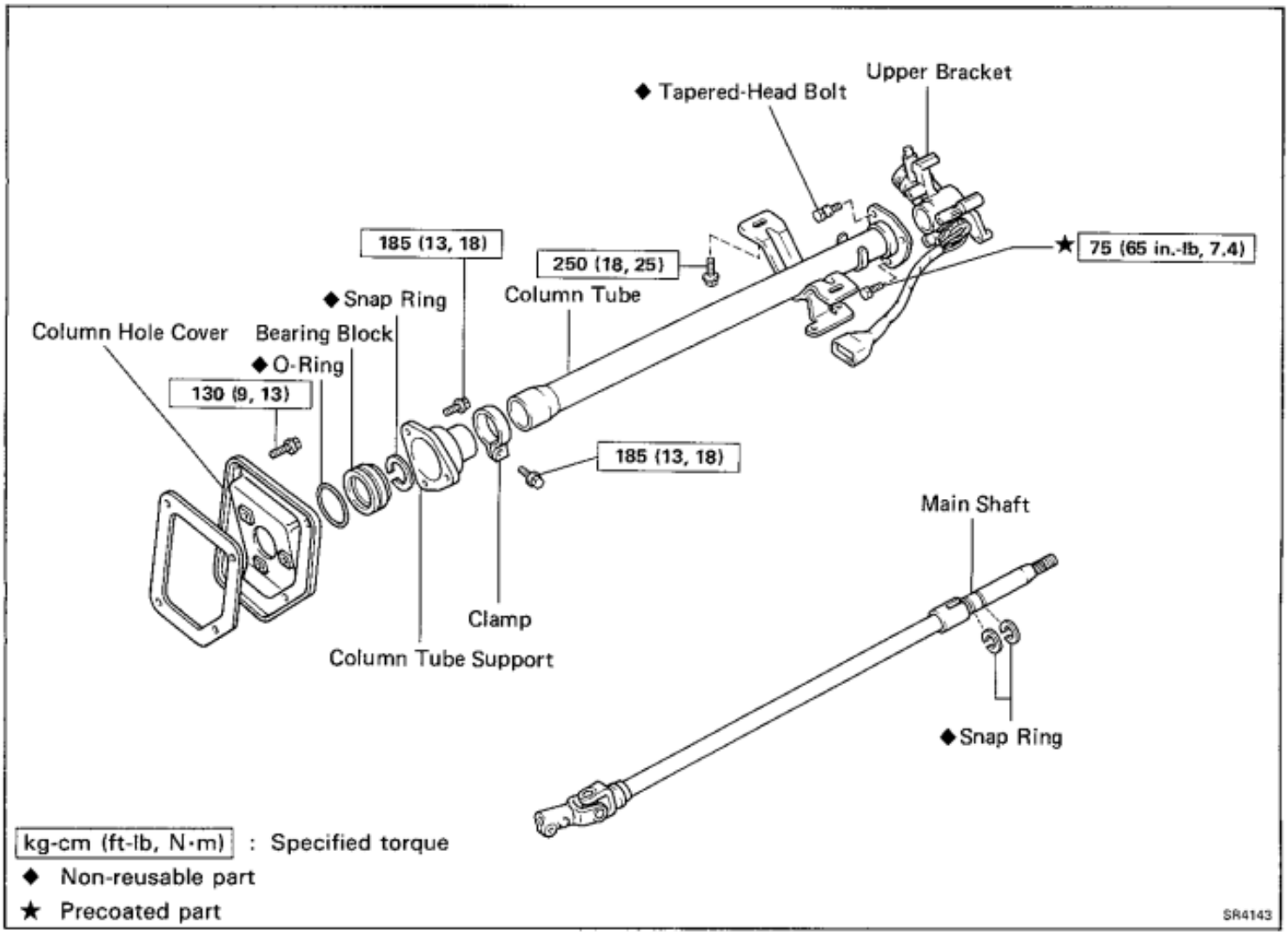

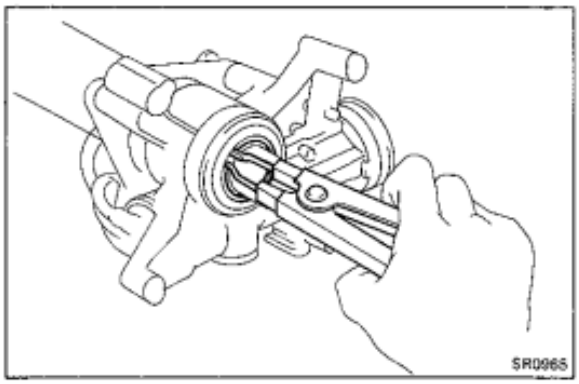

DISASSEMBLY OF STEERING COLUMN

1. REMOVE MAIN SHAFT

(a) Turn ignition key to the "ACC" position.

(b) Using snap ring pliers, remove the snap ring.

(c) Pull out the main shaft.

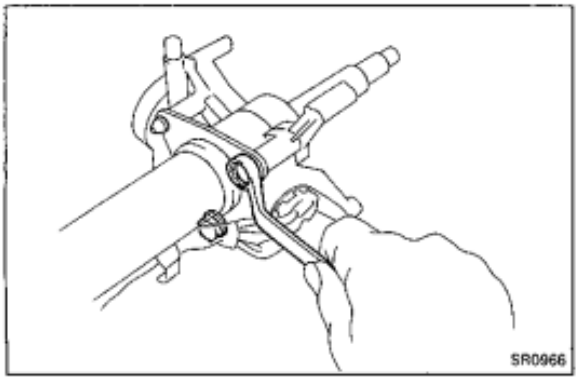

2. REMOVE UPPER BRACKET FROM COLUMN TUBE

(a) Loosen the broken bolt by tapping the chisel.

(b) Remove the three bolts.

(c) Disconnect the upper bracket from the breakaway bracket.

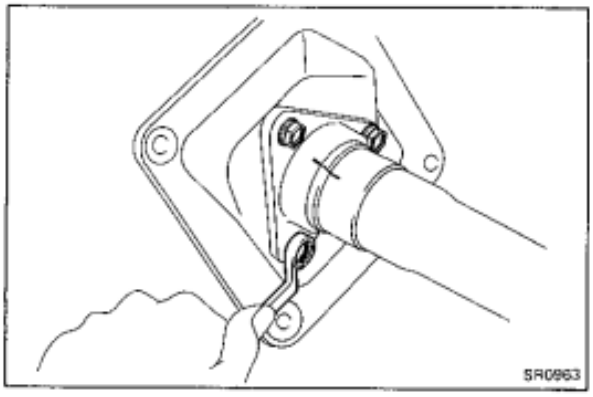

3. REMOVE COLUMN HOLE COVER FROM COLUMN TUBE

(a) Remove the three bolts.

(b) Remove the column hole cover.

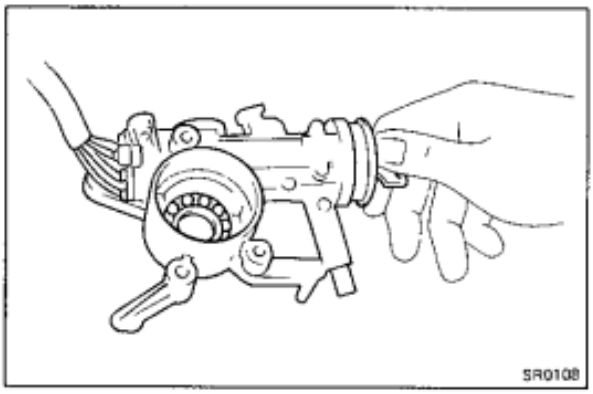

INSPECTION AND REPLACEMENT OF STEERING COLUMN

1. INSPECT UPPER BRACKET

(a) Check that the steering lock mechanism operates properly.

(b) Check the upper bearing rotation condition and check for abnormal noise.

If the bearing is worn or damaged, replace the upper bracket.

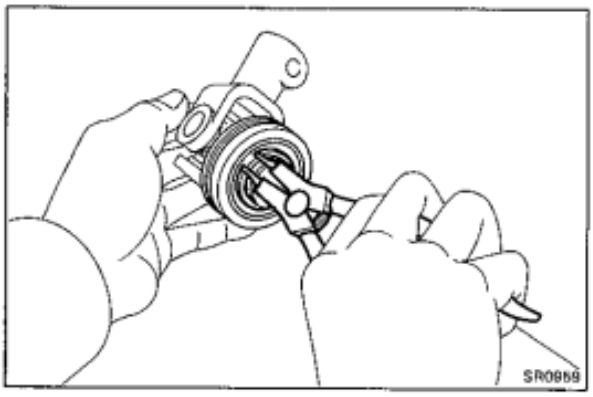

2. IF NECESSARY, REPLACE MAIN SHAFT LOWER BEARING

(a) Remove the dust seal.

(b) Using snap ring pliers, remove the snap ring.

(c) Pull out the lower bearing.

(d) Push in the lower bearing.

(e) Using snap ring pliers, install the snap ring.

(f) Install the dust seal.

3. IF NECESSARY, REPLACE SPIDER BEARING
(See page SR-14)

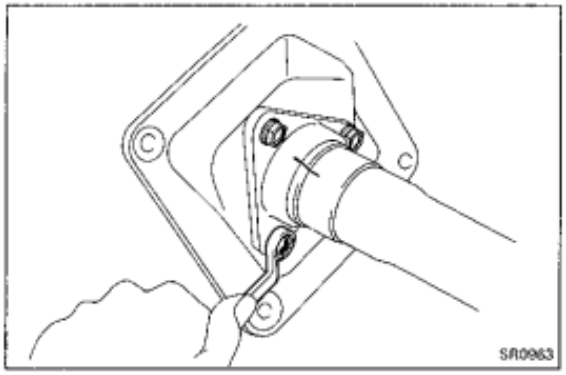

ASSEMBLY OF STEERING COLUMN

(See page SR-18)

1. INSTALL COLUMN HOLE COVER TO COLUMN TUBE

   Install the column hole cover with three bolts.

   Torque: 185 kg-cm (13 ft-lb, 18 N·m)

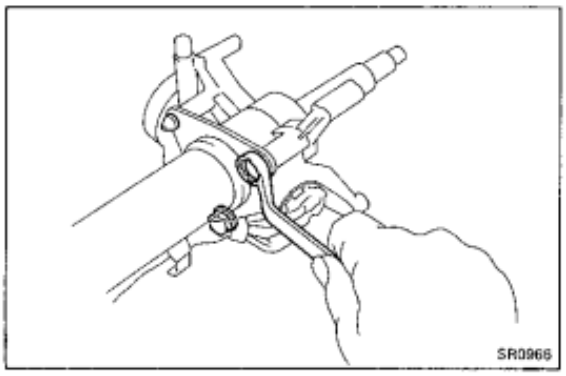

2. INSTALL UPPER BRACKET TO COLUMN TUBE

   Install the upper bracket with three bolts.
   (See page SR-18)

   Torque: 75 kg-cm (65 in.-lb, 7.4 N·m)

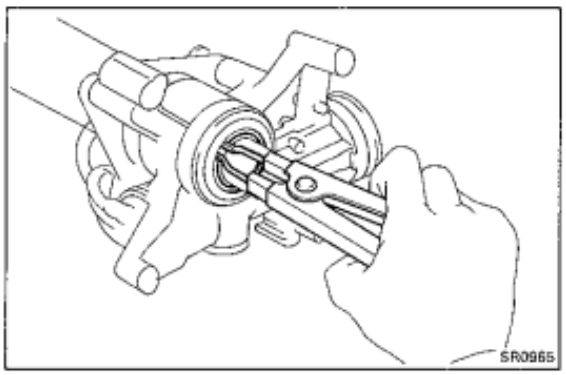

3. INSTALL MAIN SHAFT TO COLUMN TUBE

   (a) Turn the ignition key to the ACC position.

   (b) Insert the main shaft in the column tube.

   (c) Using snap ring pliers, install the snap ring.

Tilt Steering Column

COMPONENTS

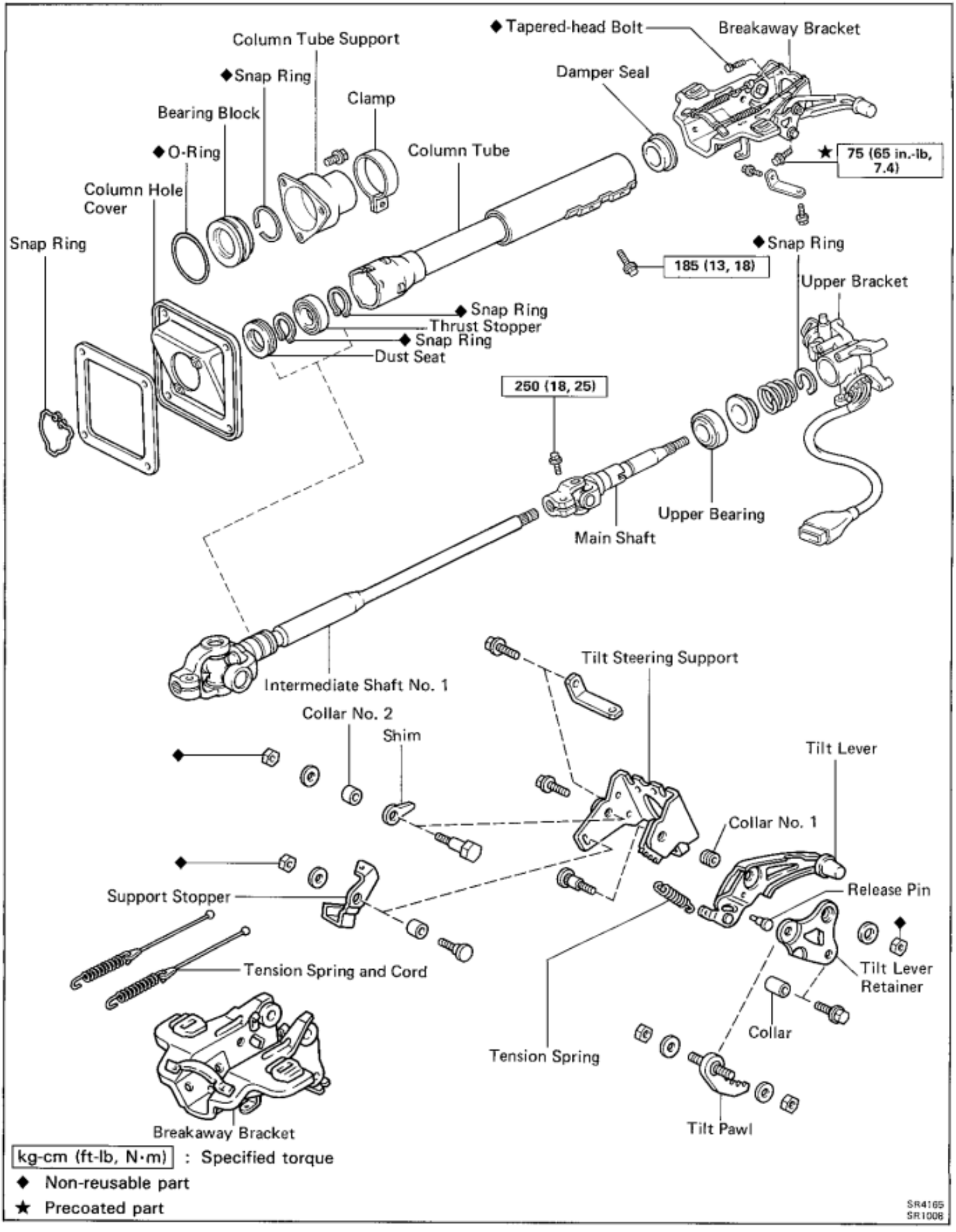

kg-cm (ft-lb, N·m) : Specified torque

◆ Non-reusable part

★ Precoated part

SR4165
SR1008

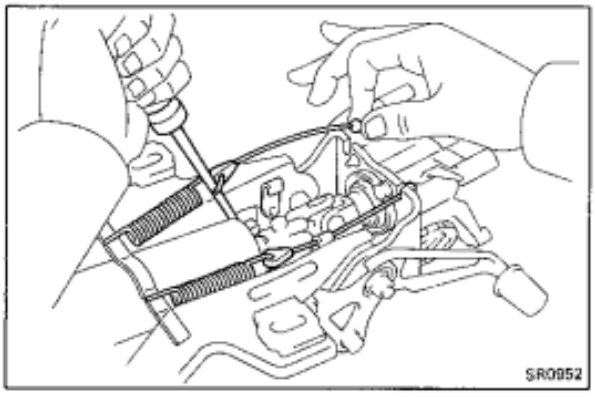

DISASSEMBLY OF STEERING COLUMN

(See page SR-9)

1. REMOVE TENSION SPRINGS AND CORDS

(a) Fully tilt the main shaft upward.

(b) Release the cord from the hook.

(c) Using a screwdriver, pry out the cord tip and remove the spring and cord.

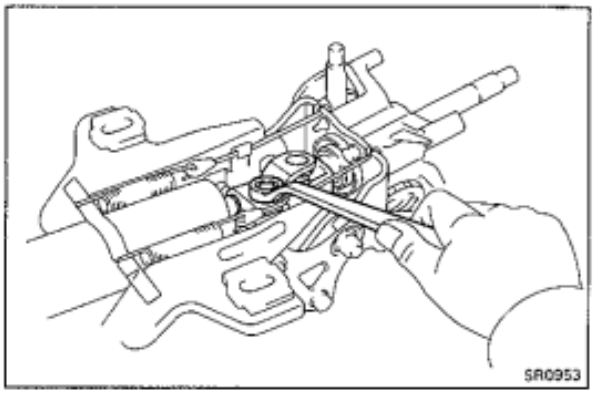

2. DISCONNECT INTERMEDIATE SHAFT FROM MAIN SHAFT

(a) Place matchmarks on the intermediate shaft and universal joint.

(b) Remove the bolt.

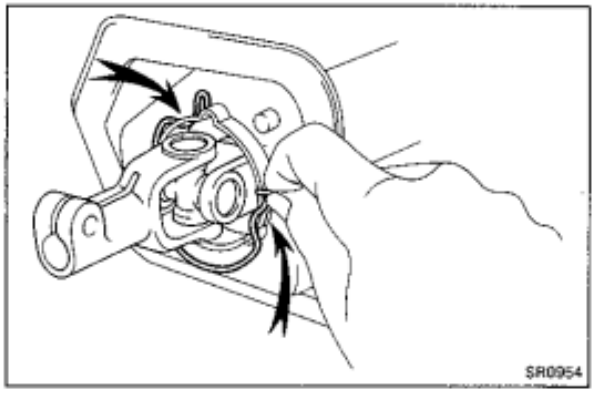

(c) Remove the snap ring.

(d) Pull out the intermediate shaft from the main shaft.

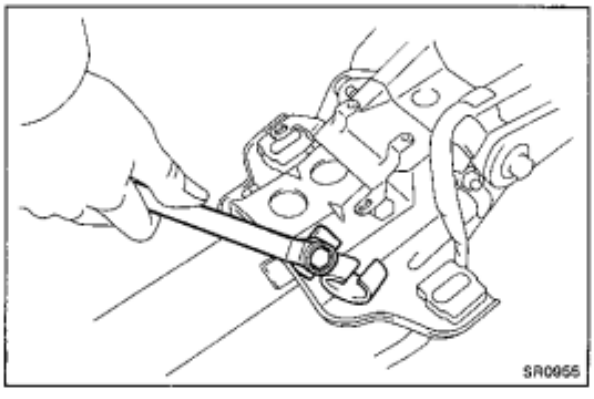

3. REMOVE COLUMN TUBE FROM BREAKAWAY BRACKET

Remove the four bolts with a clamp.

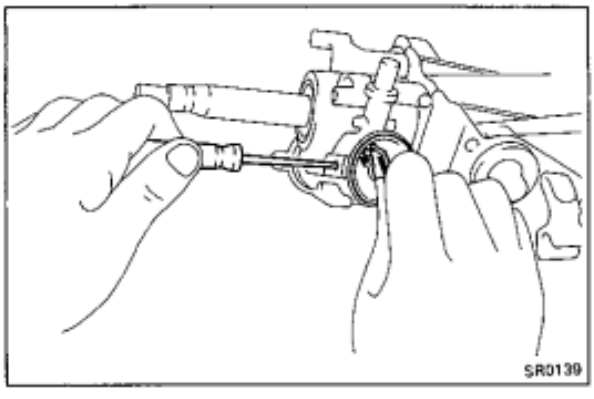

4. REMOVE IGNITION KEY CYLINDER

(a) Place the ignition key at the "ACC" position.

(b) Push down the stop key with a thin rod, and pull out the key cylinder.

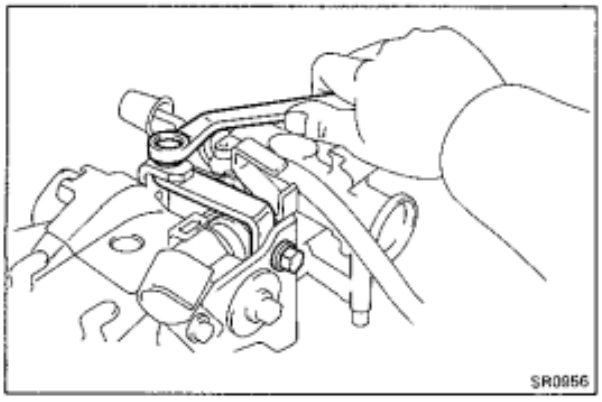

5. REMOVE UPPER BRACKET WITH MAIN SHAFT FROM BREAKAWAY BRACKET

(a) Remove the support reinforcement with two bolts.

(b) Loosen the broken bolt by tapping the chisel.

(c) Remove the three bolts.

(d) Disconnect the upper bracket from the breakaway bracket.

6. REMOVE IGNITION SWITCH

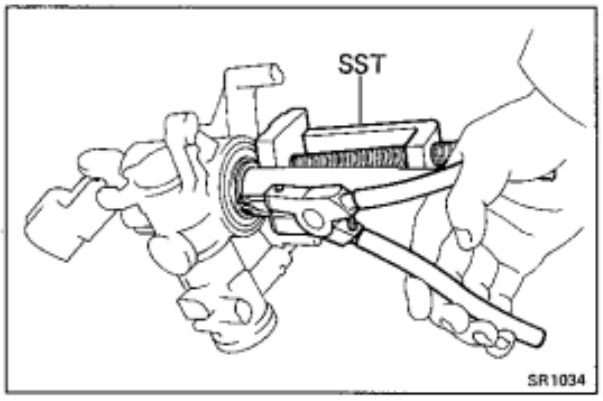

7. REMOVE MAIN SHAFT FROM UPPER BRACKET

(a) Using SST, compress the main shaft and upper bracket.

SST 09950-20017

NOTICE: Do not tighten the SST too tightly.

(b) Using snap ring pliers, remove the snap ring.

(c) Loosen SST and remove the main shaft, spring and collar from the upper bracket.

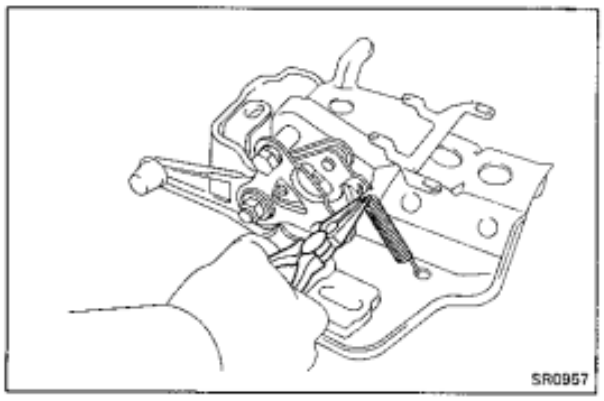

8. DISASSEMBLE TILT STEERING SUPPORT AND BREAKAWAY BRACKET

(a) Remove the tension spring.

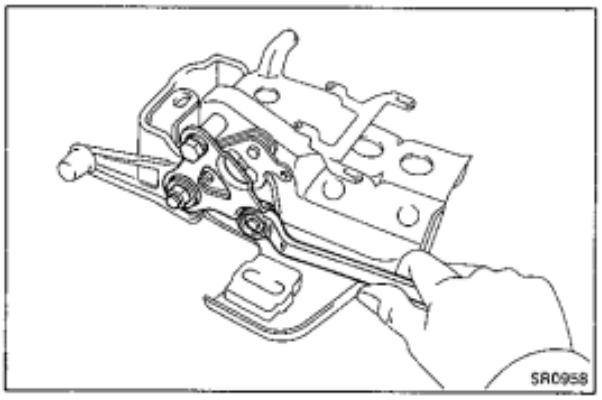

(b) Remove the two nuts and bolt.

(c) Remove the tilt lever retainer and collar.

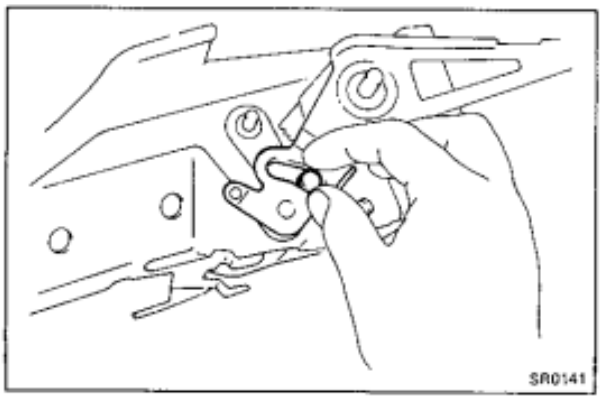

(d) Remove the release pin.

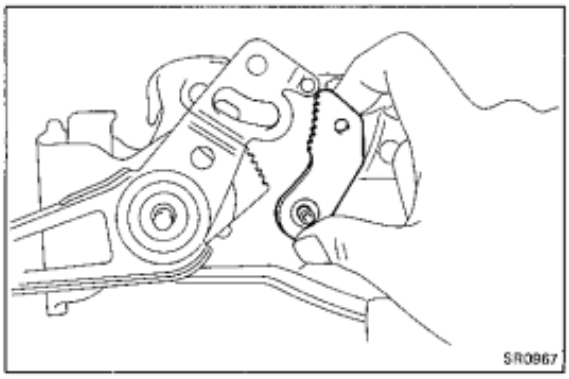

(e) Remove the tilt steering pawl.

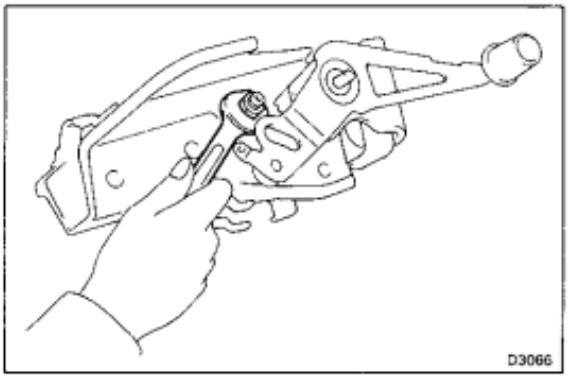

(f) Remove the tilt pawl set bolt.

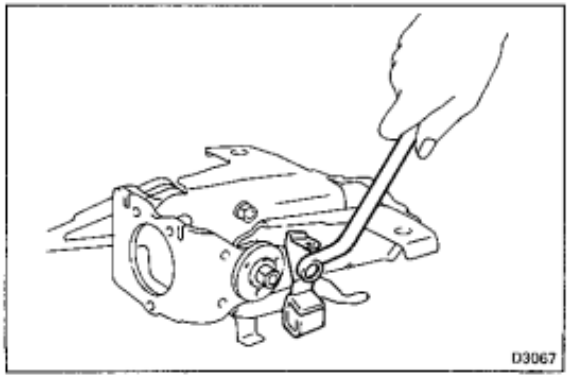

(g) Remove the nut and support stopper bolt with a clamp.

(h) Remove the tilt lever set nut.

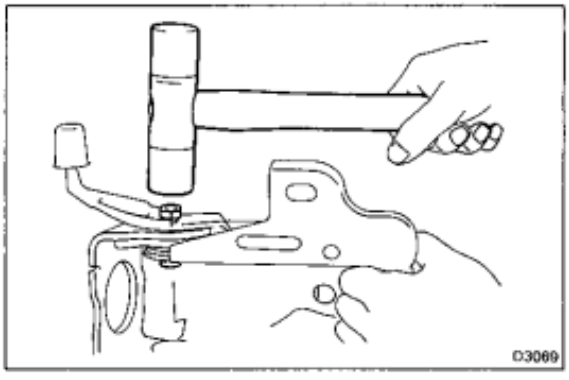

(i) Temporarily install the nut flat with the end of the bolt and tap it with a hammer.

(j) Remove the nut.

(k) Remove the collar and shim.

(l) Remove the another set bolt, nut and collar.

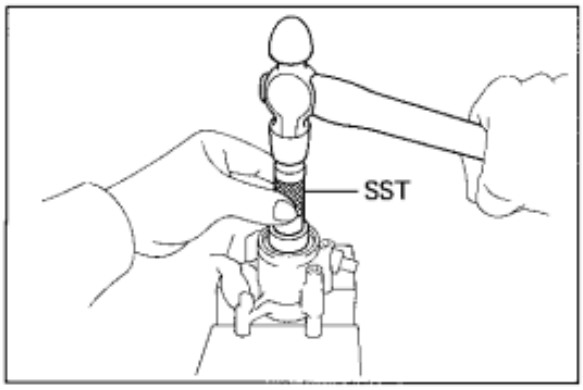

INSPECTION AND REPLACEMENT OF STEERING COLUMN

1. IF NECESSARY, REPLACE BEARING IN UPPER BRACKET

(a) Using SST and a hammer, remove the bearing.

SST 09620-30010 (09623-30010)

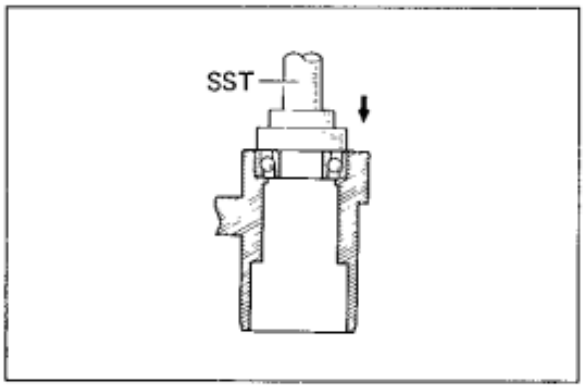

(b) Pack MP grease into the bearing.

(c) Using SST and a hammer, drive the bearing into the bracket.

SST 09620-30010 (09624-30010, 09631-00020)

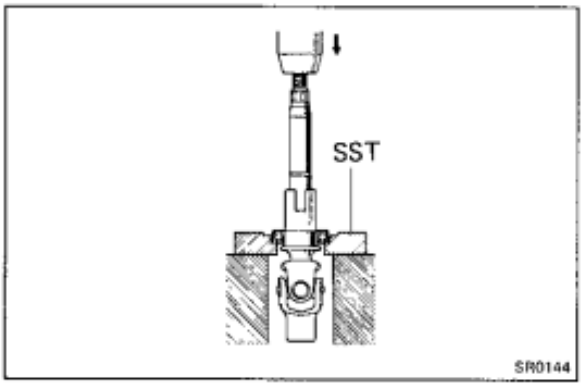

2. IF NECESSARY, REPLACE LOWER BEARING

(a) Using SST and a press, remove the lower bearing from the main shaft.

SST 09527-20011

(b) Pack MP grease into the bearing.

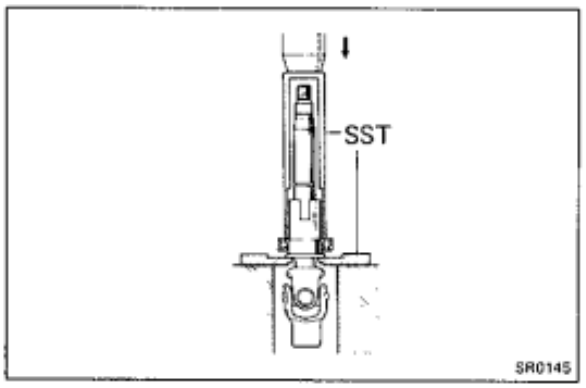

(c) Using SST and a press, assemble the lower bearing and main shaft.

SST 09236-00101 (09237-00010) and 09612-22011

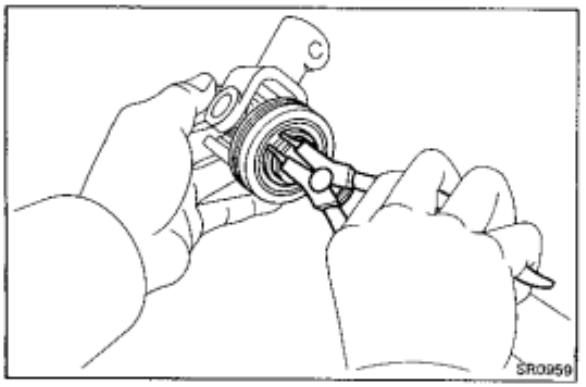

3. IF NECESSARY, REPLACE INTERMEDIATE SHAFT BEARING

(a) Using snap ring pliers, remove the snap ring.

(b) Pull out the bearing from the intermediate shaft.

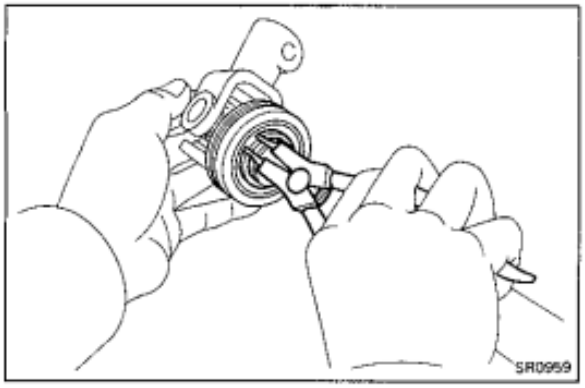

(c) Install the bearing.

(d) Using snap ring pliers, install the snap ring.

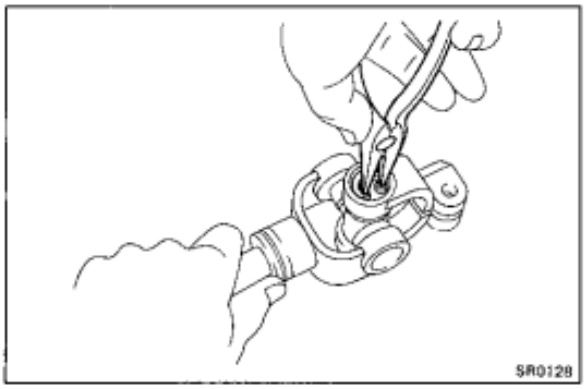

4. IF NECESSARY, REPLACE SPIDER BEARING

(a) Using needle-nose pliers, remove the four snap rings.

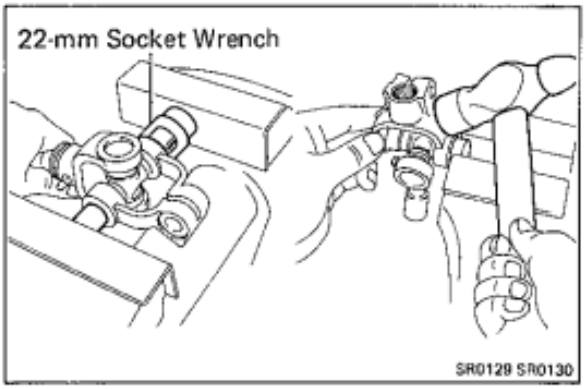

(b) Using a 12-mm and 22-mm socket wrench and vise, press out the yoke side outer race.

(c) Clamp the outer race in a vise and tap off the yoke with a hammer.

HINT: Remove the other bearing races in the same procedure.

(d) Apply molybdenum disulphide lithium base grease to the spider and bearings.

HINT: Be careful not to apply too much grease.

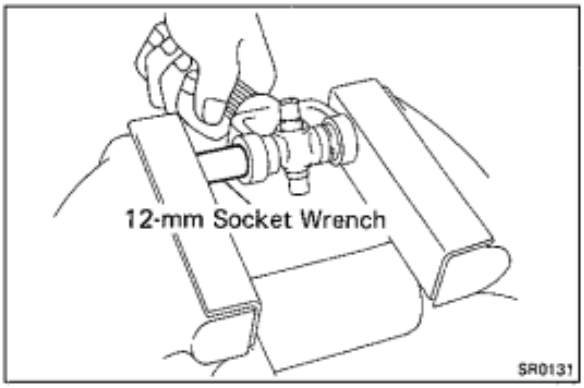

(e) Using a 12-mm socket wrench and vise, press the bearing outer race.

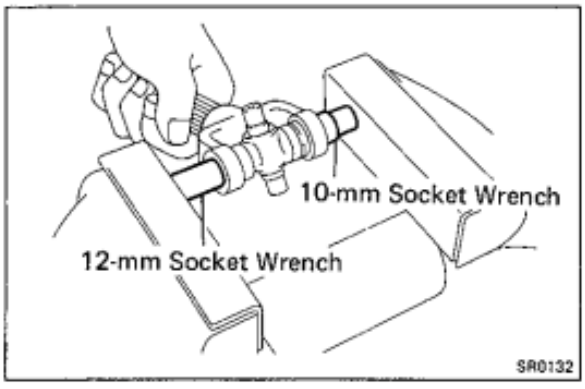

(f) Using a 10-mm and 12-mm socket wrench, adjust both bearings so that the snap ring grooves are at maximum and equal widths.

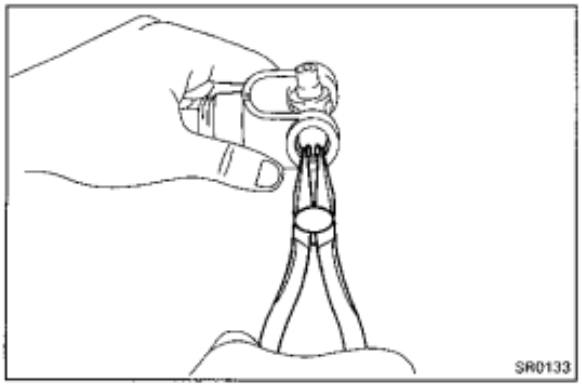

(g) Select two snap rings of the same thickness, which will allow 0 – 0.05 mm (0 – 0.0020 in.) of axial play.

HINT: Do not reuse the snap rings.

Snap ring thickness

Mark	Thickness	mm (in.)
None	1.175 – 1.225	(0.0463 – 0.0482)
Brown	1.225 – 1.275	(0.0482 – 0.0502)
Blue	1.275 – 1.325	(0.0502 – 0.0522)

(h) Using needle-nose pliers, install the snap rings.

HINT: Install the bearing outer races in the yoke side using the same procedure.

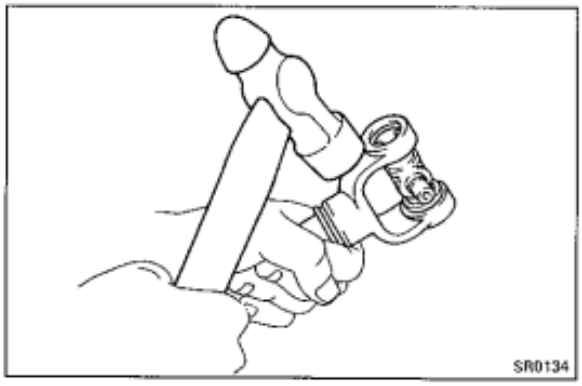

(i) Using a hammer, tap the shaft and yoke until the clearance between the bearing outer race and snap ring is zero.

(j) Check the spider bearing.

- Check that the spider bearing moves smoothly.
- Check the spider bearing axial play.

Bearing axial play: 0.05 mm (0.0020 in.) or less

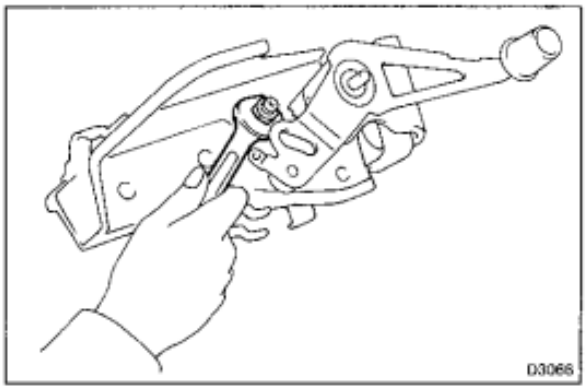

ASSEMBLY OF STEERING COLUMN

(See page SR-6)

1. COAT ALL RUBBING PARTS WITH MP GREASE

2. ASSEMBLE PAWL SET BOLT

   Torque: 185 kg-cm (13 ft-lb, 18 N·m)

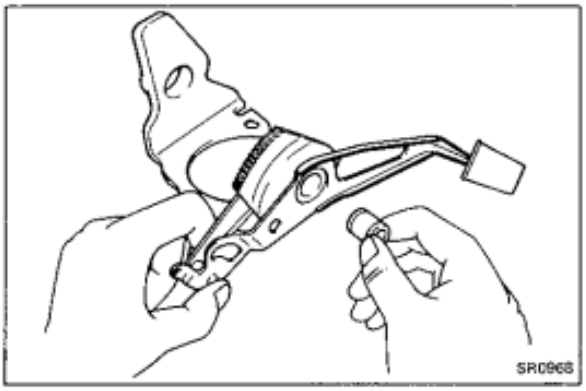

3. ASSEMBLE TILT LEVER TO SUPPORT

   (a) Select a collar No. 1 which will eliminate play.

Outer diameter	mm (in.)
17.989 – 17.996	(0.7082 – 0.7085)
17.996 – 18.003	(0.7085 – 0.7088)
18.003 – 18.010	(0.7088 – 0.7091)
18.010 – 18.017	(0.7091 – 0.7093)
18.017 – 18.024	(0.7093 – 0.7096)

   (b) Install tilt lever and collar No. 1 to the support.

   (c) Select a collar No. 2 which will eliminate all play.

Outer diameter	mm (in.)
17.982 – 18.000	(0.7080 – 0.7087)
18.000 – 18.018	(0.7087 – 0.7094)

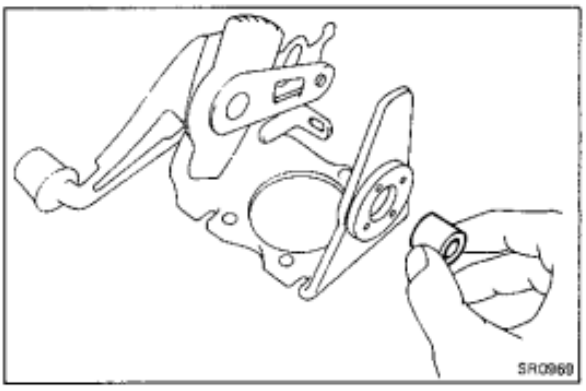

   (d) Install collar No. 2 to the support.

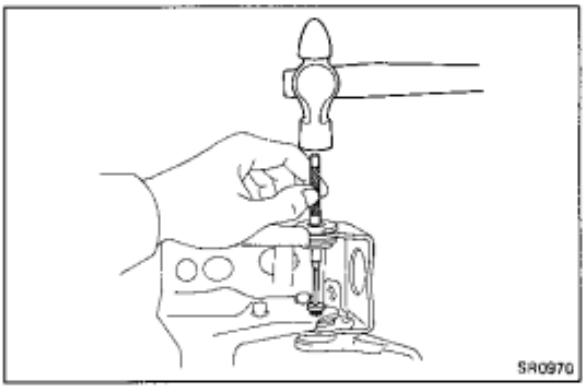

   (e) Drive in the serration bolt to the support.

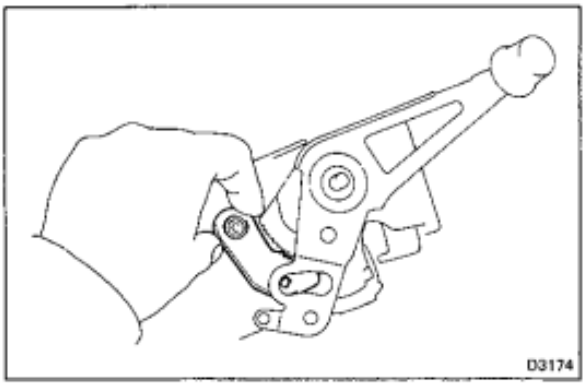

   (f) Install the tilt pawl.

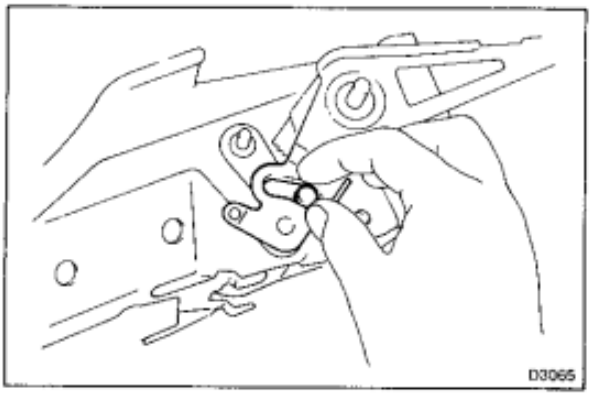

(g) Install the tension spring and the release pin.

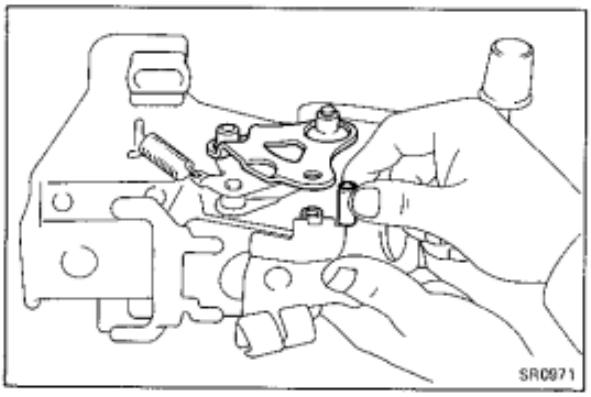

(h) Assemble the collar and tilt lever retainer.

Torque: 185 kg-cm (13 ft-lb, 18 N·m)

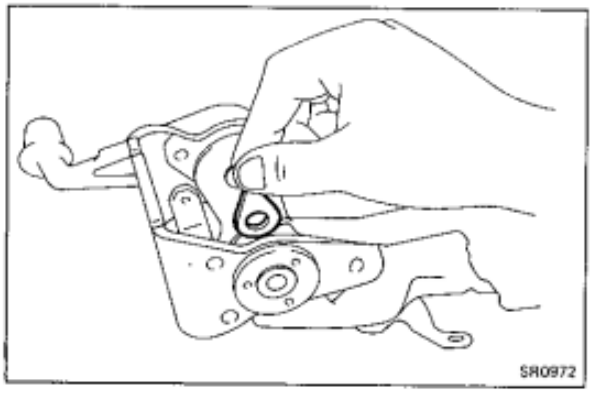

4. INSTALL SHIM, BOLT AND NUT

(a) Select a shim which fits snugly when pressed in by hand.

Mark	Thickness	mm (in.)
None	0.197 – 0.203	(0.0078 – 0.0080)
5	0.495 – 0.505	(0.0195 – 0.0199)
8	0.795 – 0.805	(0.0313 – 0.0317)
14	1.395 – 1.405	(0.0549 – 0.0553)
18	1.795 – 1.805	(0.0707 – 0.0711)

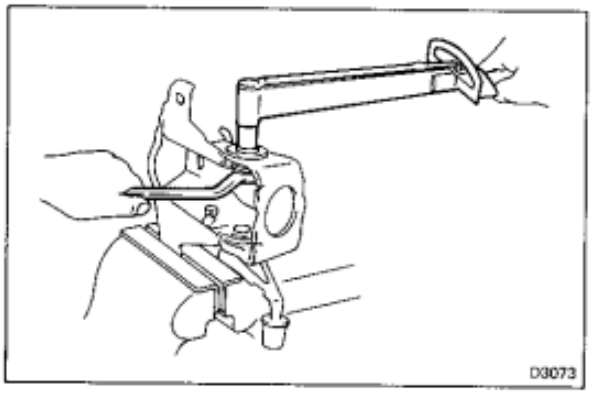

(b) Install the shim, bolt, washer and a lock nut.

Torque: 185 kg-cm (13 ft-lb, 18 N·m)

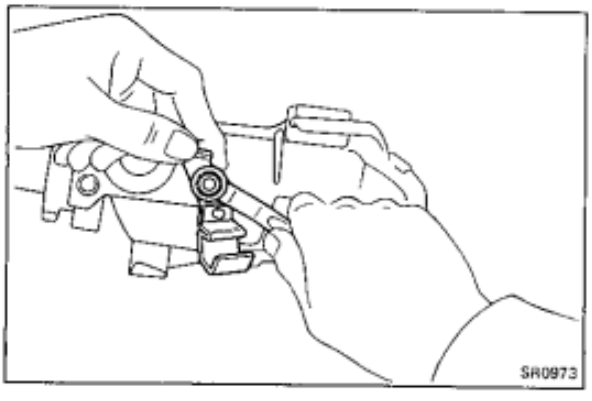

5. INSTALL TILT STEERING SUPPORT STOPPER BOLT

(a) Install the stopper bolt, bracket, washer and nut.

(b) Tighten the nut by holding the bracket as shown.

Torque: 100 kg-cm (7 ft-lb, 10 N·m)

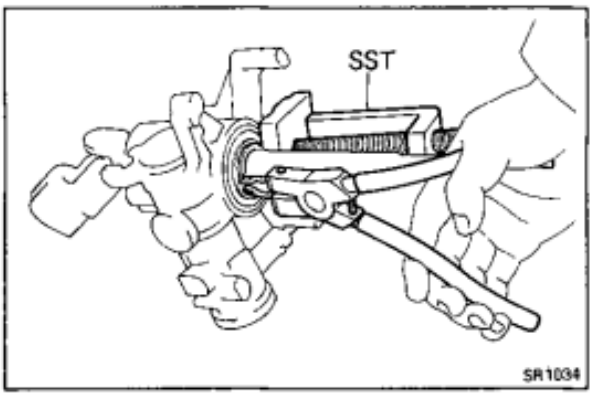

6. ASSEMBLE MAIN SHAFT AND UPPER BRACKET

(a) Assemble the collar, spring and main shaft, and insert them into the bracket.

(b) Using SST and snap ring pliers, install the snap ring by compressing the main shaft and upper bearing.

SST 09950-20017

NOTICE: Do not tighten the SST more than necessary.

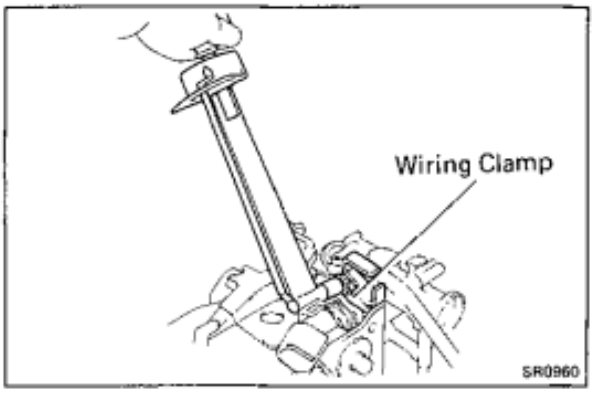

7. ASSEMBLE UPPER BRACKET AND SUPPORT

(a) Apply sealant to one or two threads of the bolt end.

Sealant: Part No. 08833-00070, Three bond 1324 or equivalent

HINT: This adhesive will not harden while exposed to air. It will act as a sealer or binding agent only when applied to threads, etc. and the air is cut off.

(b) Install the two bolts; one with a wiring clamp.

Torque: 75 kg-cm (65 in.-lb, 7.4 N·m)

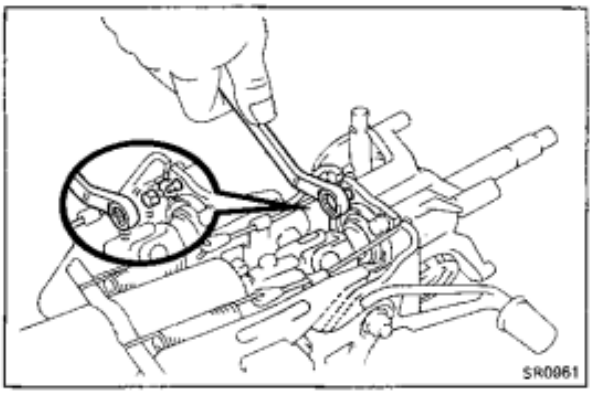

(c) Install the break down bolt and tighten until the bolt head breaks off.

(d) Install the support reinforcement.

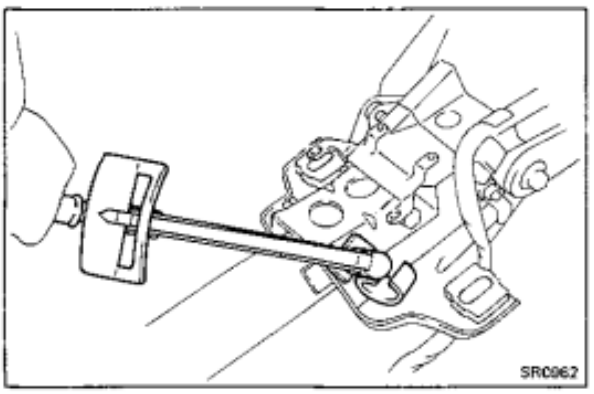

8. INSTALL BREAKAWAY BRACKET TO COLUMN TUBE

Torque: 185 kg-cm (13 kg-cm, 18 N·m)

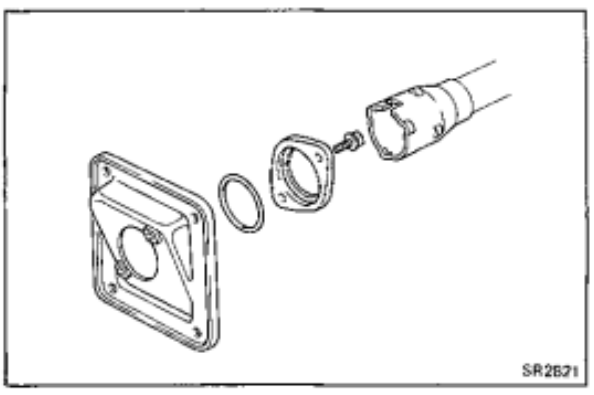

9. INSTALL COLUMN HOLE COVER TO COLUMN TUBE

Install the following parts on the column.

- Hole cover plate
- New O-ring
- Column hole cover

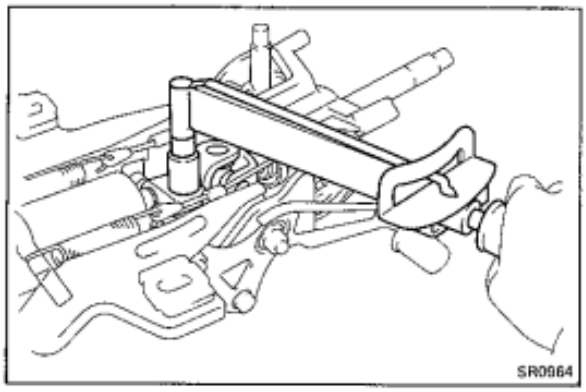

10. CONNECT MAIN SHAFT AND INTERMEDIATE SHAFT

(a) Align the marks on the joint yoke and intermediate shaft and tighten the bolt.

Torque: 250 kg-cm (18 ft-lb, 25 N·m)

HINT: Be careful not to push out the damper seal while installing the intermediate shaft.

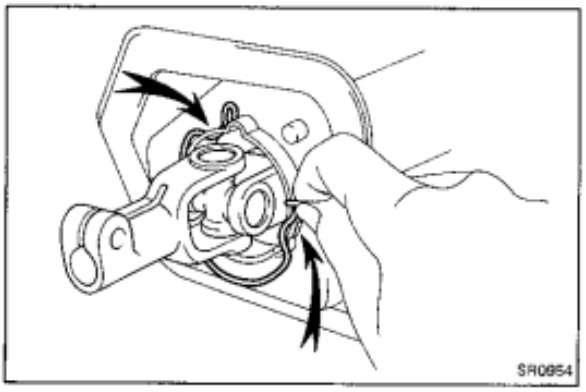

(b) Install the snap ring.

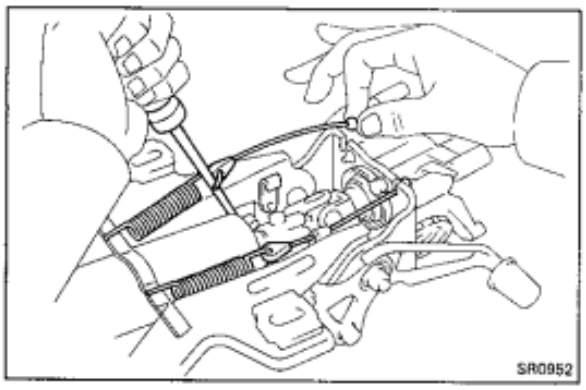

11. INSTALL TWO SPRINGS AND TWO CORDS

(a) Connect the tension spring and cord, and hook the spring to the hanger.

(b) Pry the spring end and hook the cord end to the support.

(c) Hook the cord to the cord guides.

12. CHECK OPERATION OF TILT STEERING LEVER AND SUPPORT

(a) Check that there is no axial or horizontal play at the end of the main shaft.

(b) Check that the main shaft locks securely in all six positions.

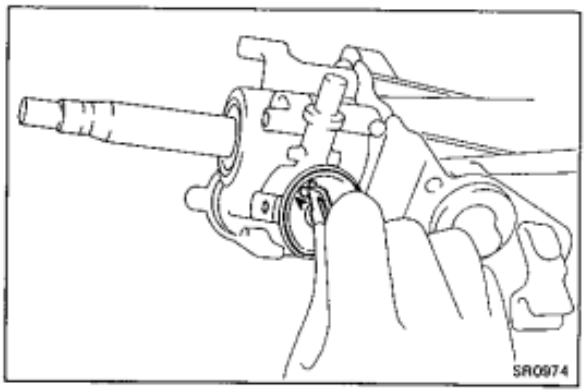

13. INSTALL IGNITION SWITCH

(a) Turn the ignition key plate to the "ACC" position and install the key cylinder into the upper bracket.

(b) Install the ignition switch.

MANUAL GEAR HOUSING

REMOVAL AND INSTALLATION OF MANUAL GEAR HOUSING

Remove and install the parts as shown.

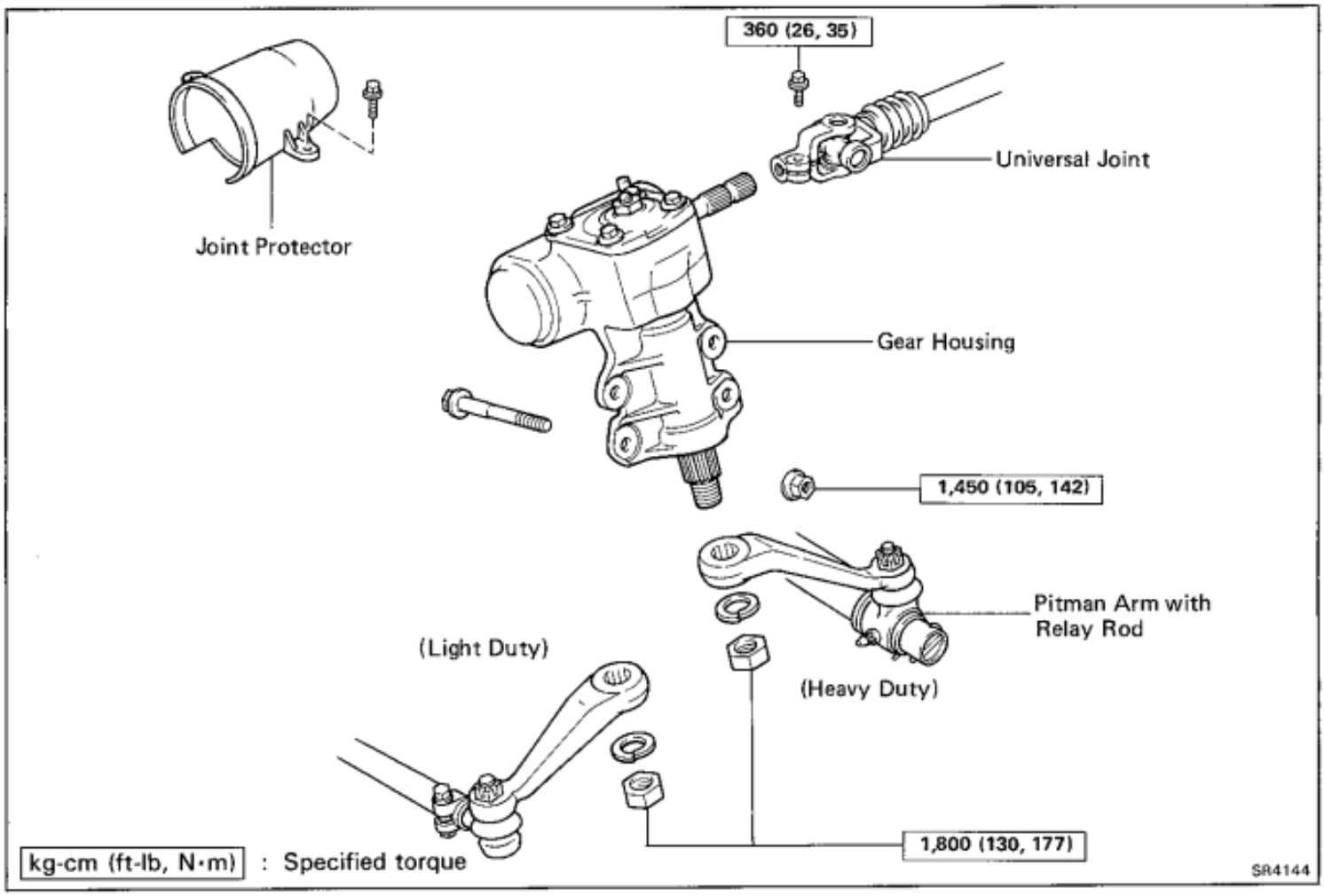

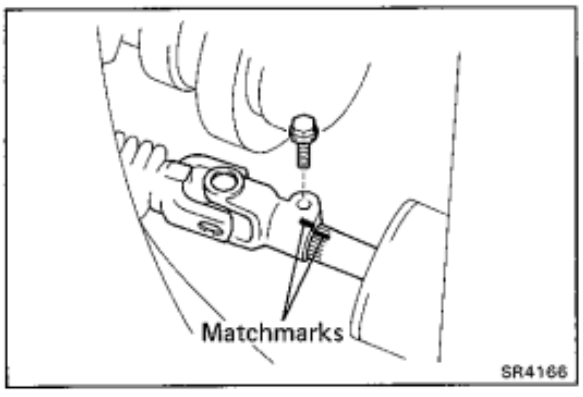

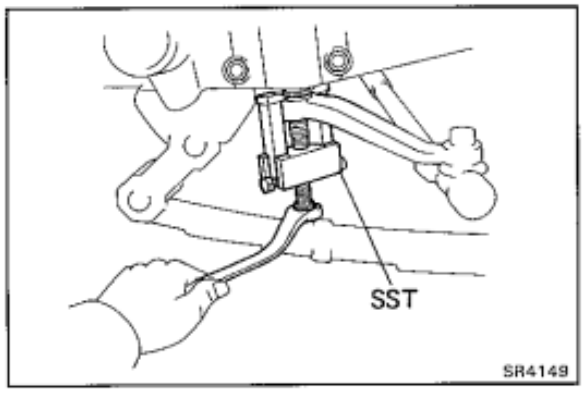

(MAIN POINT OF REMOVAL AND INSTALLATION)

1. DISCONNECT UNIVERSAL JOINT

(a) Loosen the column side set bolt.

(b) Remove the gear side set bolt.

(c) Place matchmarks on the universal joint and worm shaft.

(d) Slide the shaft rearward to disconnect the shaft from the worm shaft.

2. DISCONNECT PITMAN ARM FROM GEAR HOUSING

(a) Loosen the pitman arm nut.

(b) Using SST, disconnect pitman arm from the gear housing.

SST 09628-62011

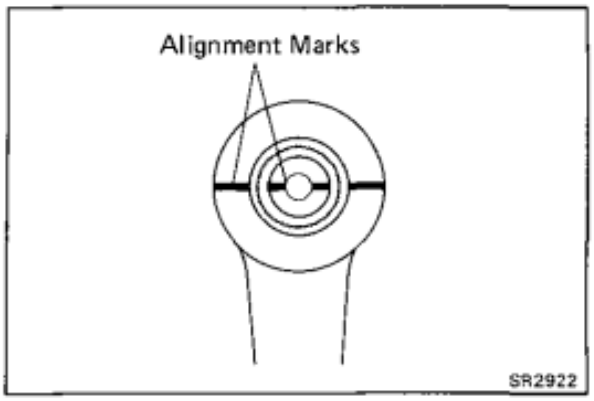

3. CONNECT PITMAN ARM TO GEAR HOUSING

(a) Align the alignment marks on the sector shaft and pitman arm and install the spring washer and arm.

(b) Tighten the pitman arm nut.

Torque: 1,800 kg-cm(130 ft-lb, 177 N·m)

COMPONENTS

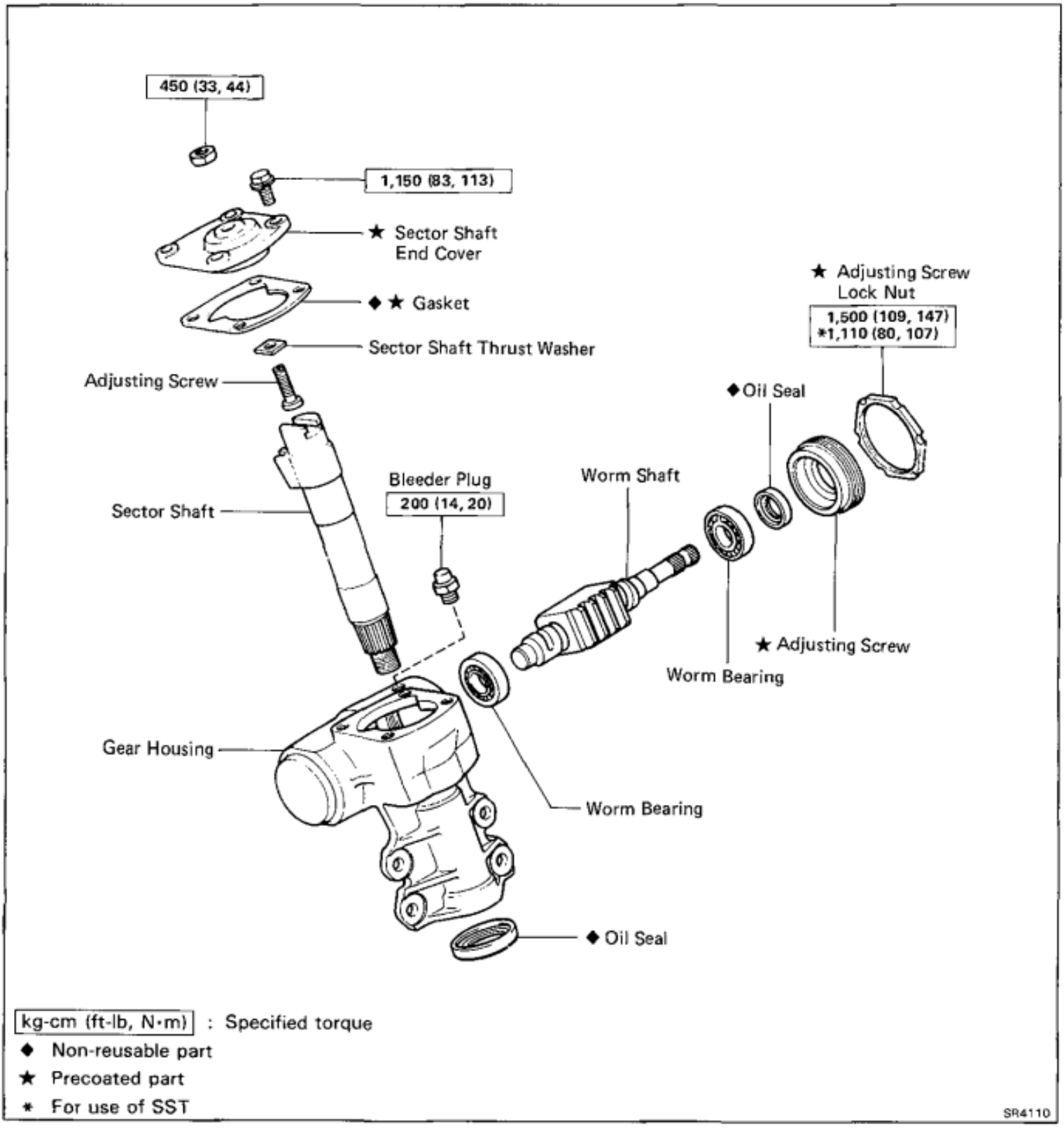

kg-cm (ft-lb, N·m) : Specified torque

◆ Non-reusable part

★ Precoated part

* For use of SST

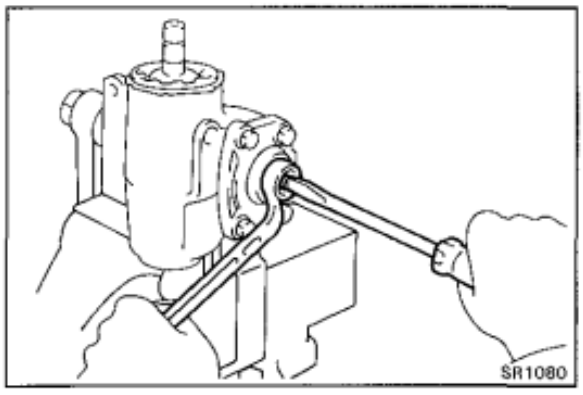

DISASSEMBLY OF MANUAL GEAR HOUSING

(See page SR-21)

1. **REMOVE BLEEDER PLUG AND DRAIN GEAR OIL**

2. **REMOVE END COVER AND SECTOR SHAFT**

   (a) Remove the adjusting screw lock nut and four bolts.

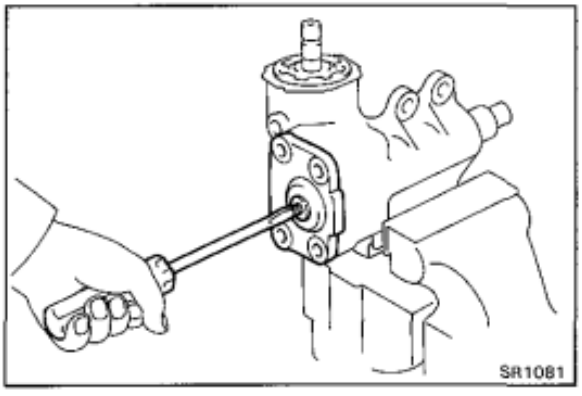

   (b) Remove the end cover by turning the adjusting screw clockwise with a screwdriver.

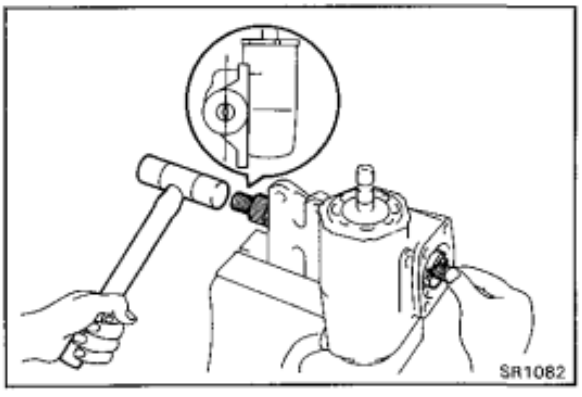

   (c) Using a plastic hammer, tap out the sector shaft and adjusting screw from the gear housing.

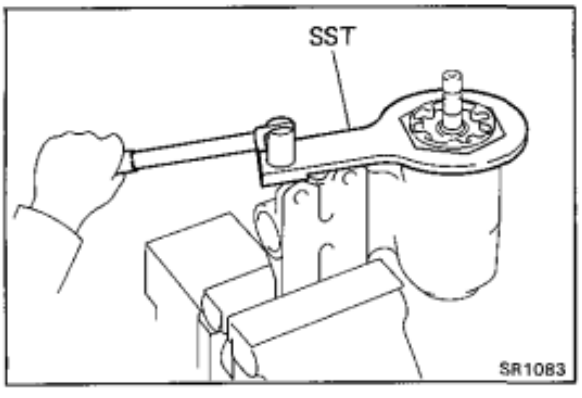

3. **REMOVE LOCK NUT**

   Using SST, remove the lock nut.

   SST 09617-60010

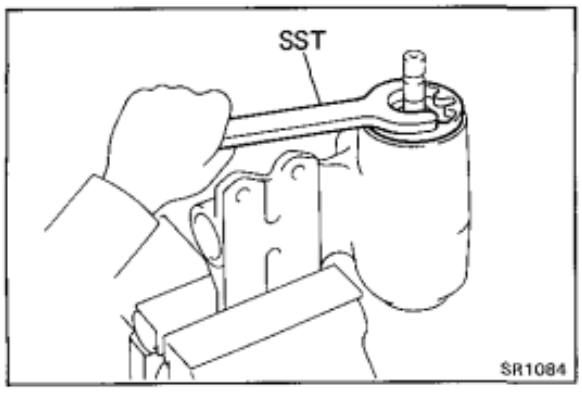

4. **REMOVE BEARING ADJUSTING SCREW**

   Using SST, remove the adjusting screw.

   SST 09616-30020

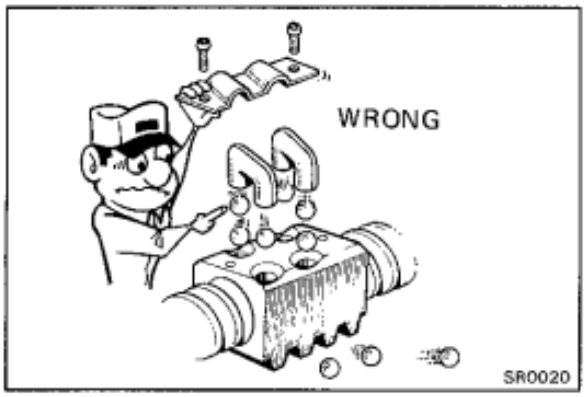

5. **REMOVE WORM SHAFT**

Pull the worm shaft out of the gear housing.

NOTICE: Do not disassemble the ball nut from the steering worm shaft.

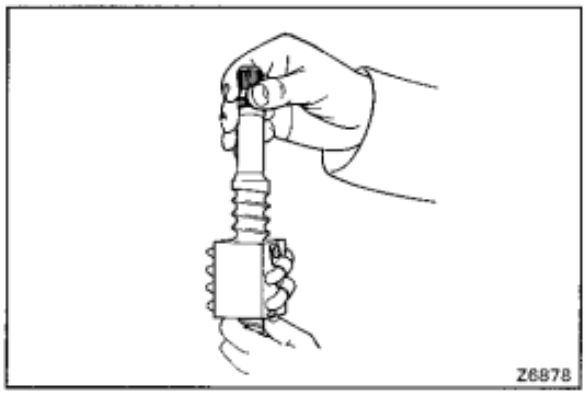

INSPECTION AND REPLACEMENT OF MANUAL GEAR HOUSING

1. **INSPECT WORM AND BALL NUT**

(a) Check the worm and ball nut for wear or damage.

(b) Check that the nut rotates smoothly down the shaft by its own weight.

If a problem is found, repair or replace the worm.

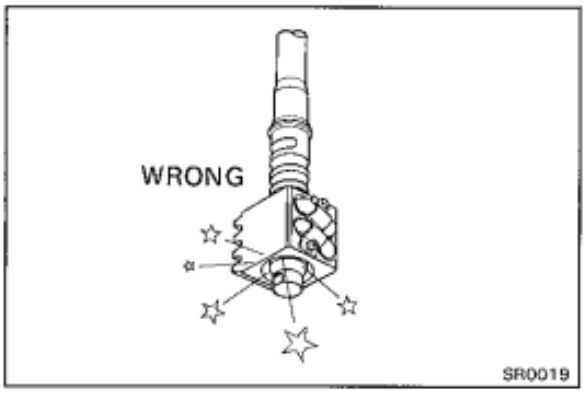

NOTICE: Do not allow the ball nut to hit the end of the worm shaft.

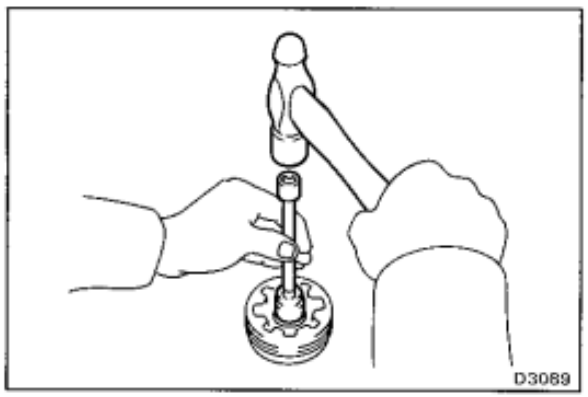

2. **INSPECT WORM BEARINGS AND OIL SEAL**

Check for wear or damage.

If a problem is found, replace the bearings, bearing races and oil seal.

3. **IF NECESSARY, REPLACE OIL SEAL**

(a) Using a 19 mm socket wrench, drive out the oil seal.

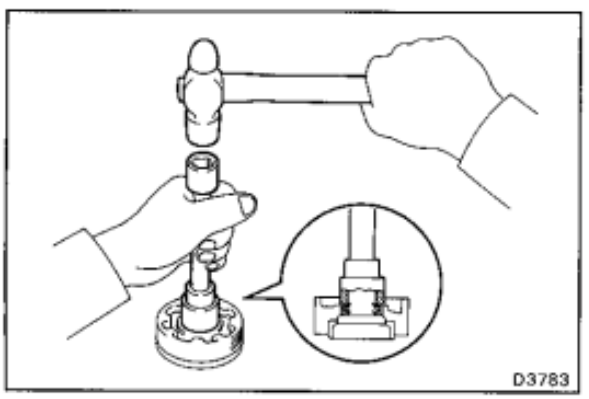

(b) Using a 23 mm socket wrench, drive in the oil seal.

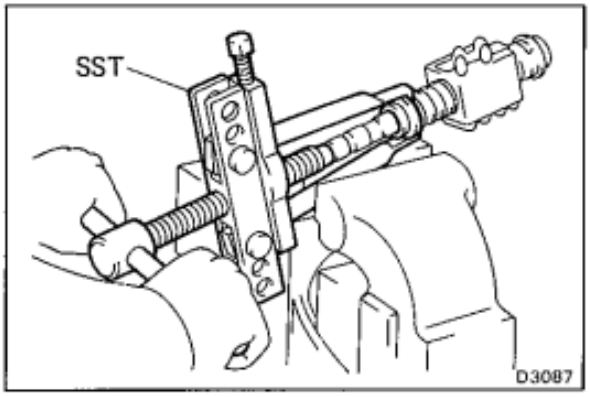

4. **IF NECESSARY, REPLACE WORM BEARINGS**

(a) Using SST, remove the both side bearings.

SST 09950-20017

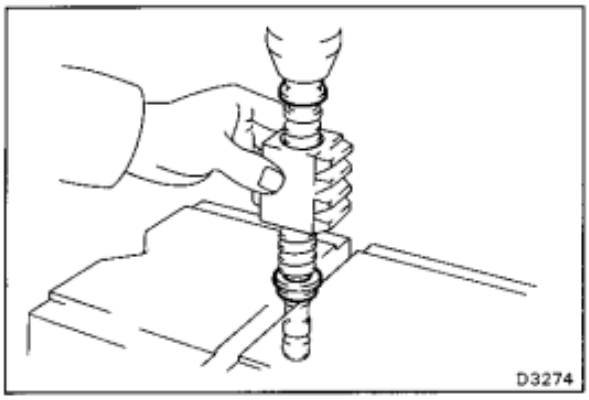

(b) Using a press, install the both side bearings.

NOTICE: Be careful not to damage the ball nut while holding it by hand.

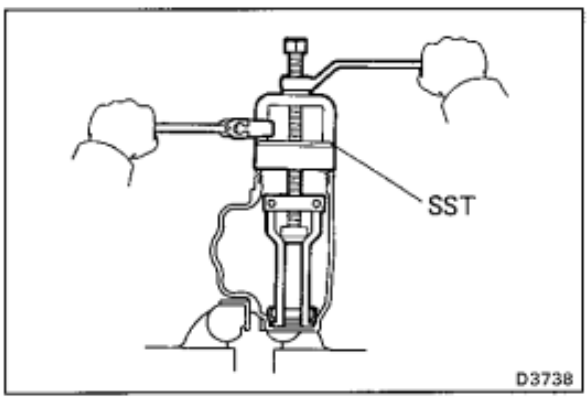

(c) Using SST, remove the outer race from the gear housing.

SST 09612-65014 (09612-01030)

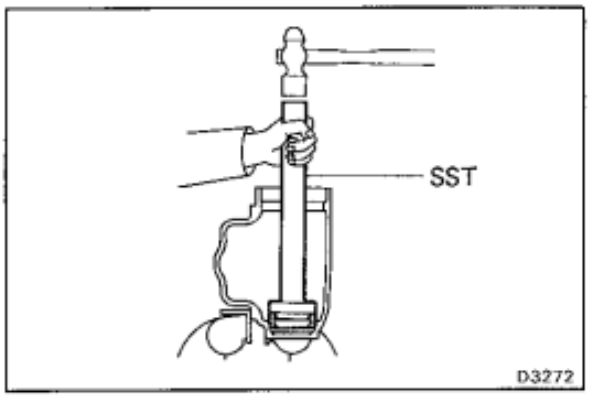

(d) Using SST, drive in the outer race into the gear housing.

SST 09550-10012 (09552-10010, 09559-10010)

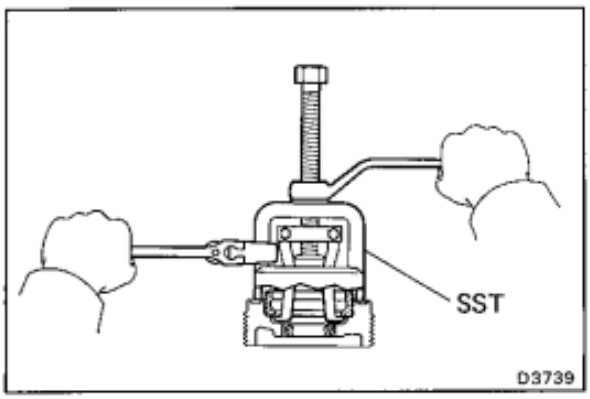

(e) Using SST, remove the outer race from the adjusting screw.

SST 09612-65014 (09612-01040)

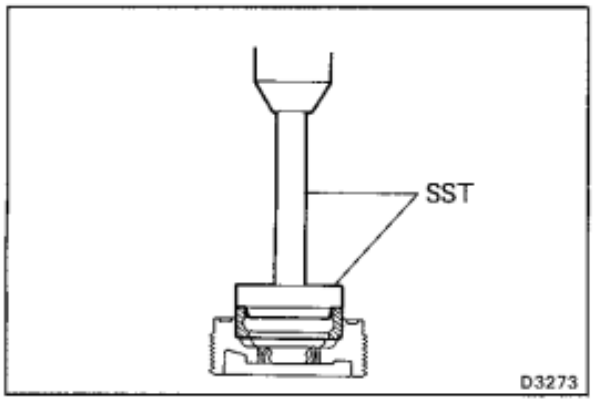

(f) Using SST, press in the outer race into the adjusting screw.

SST 09550-10012 (09552-10010, 09559-10010)

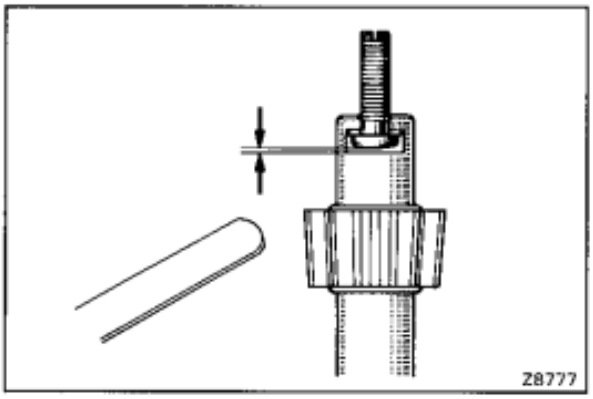

5. INSPECT SECTOR SHAFT

Measure shaft thrust clearance with a feeler gauge.

Maximum clearance: 0.05 mm (0.0020 in.) or less.

If necessary, install a new thrust washer which will provide the minimum clearance between the sector shaft and the adjusting screw.

Thrust washer thickness mm (in.)	
1.95 (0.0768)	2.05 (0.0807)
2.00 (0.0787)	

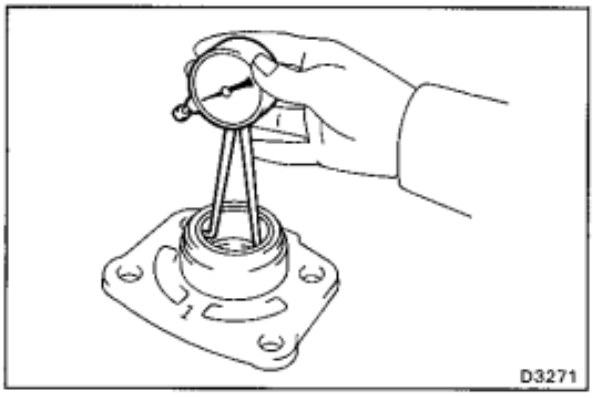

6. INSPECT SECTOR SHAFT END COVER

(a) Check for damage.

(b) Check the bushing for wear or damage.

If necessary, replace the end cover.

HINT: When replacing the end cover, replace with one bearing the same number.

No.	Bushing inside diameter mm (in.)
1	36.055 — 36.065 (1.4195 — 1.4199)
2	36.045 — 36.055 (1.4191 — 1.4195)
3	36.035 — 36.045 (1.4187 — 1.4191)
4	36.025 — 36.035 (1.4183 — 1.4187)

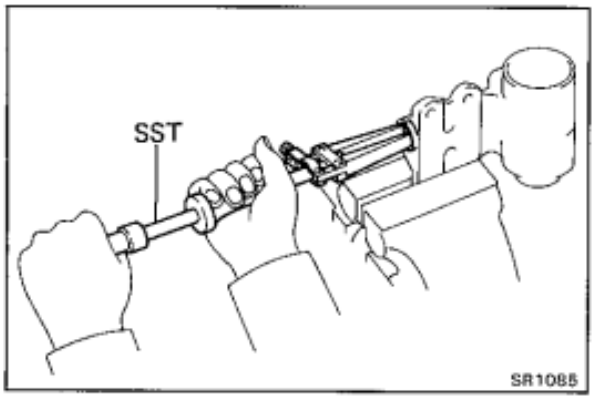

7. IF NECESSARY, REPLACE OIL SEAL

(a) Using SST, remove the oil seal.

SST 09308-00010

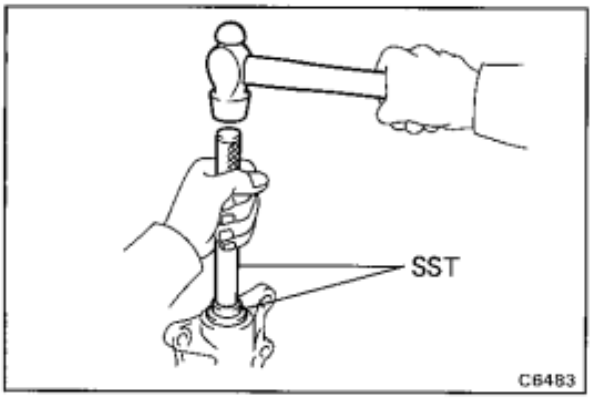

(b) Using SST, drive in the new oil seal.

SST 09550-10012 (09558-10010, 09552-10010)

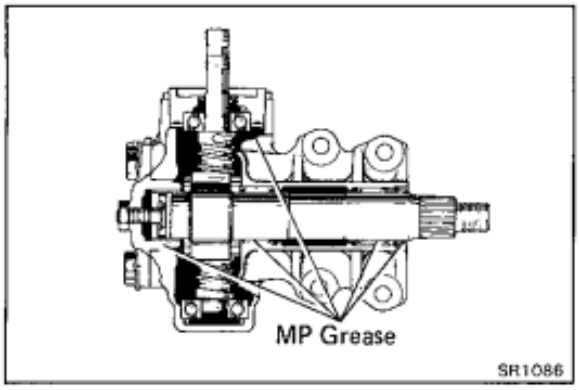

ASSEMBLY OF STEERING GEAR HOUSING

(See page SR-21)

1. APPLY MP GREASE TO BUSHING, NEEDLE ROLLER BEARINGS AND OIL SEALS

2. INSERT WORM SHAFT INTO GEAR HOUSING

Place the worm bearings on the shaft and insert the shaft into the housing.

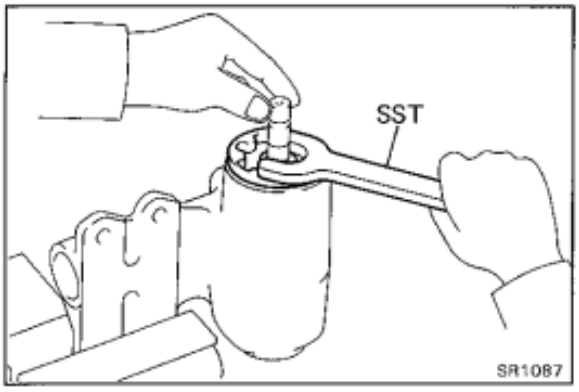

3. INSTALL AND ADJUST BEARING ADJUSTING SCREW

(a) Using SST, gradually tighten the adjusting screw until it is snug.

SST 09616-30020

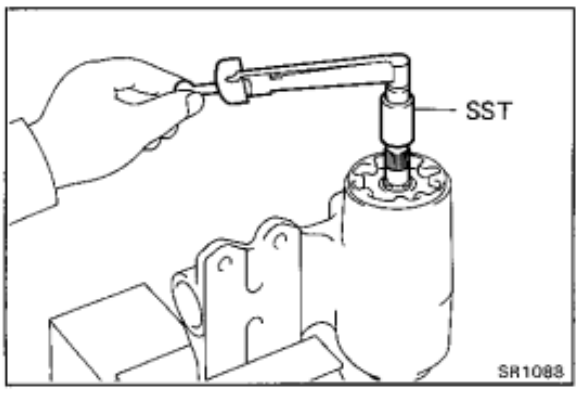

(b) Using a torque meter and SST, measure the bearing preload in both directions. Turn the adjusting screw until the preload is correct.

Preload (starting): 3.5 — 5 kg-cm (3.0 — 4.3 in.-lb, 0.34 — 0.49 N·m)

SST 09616-00010

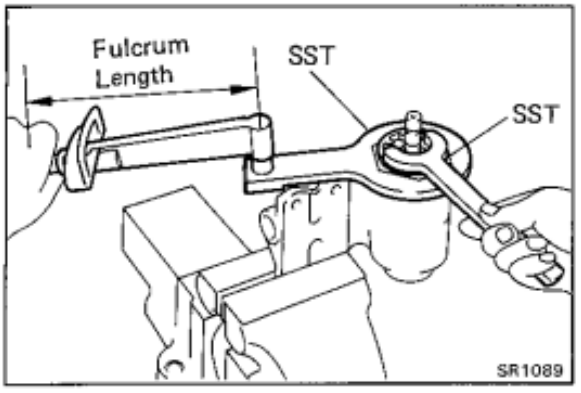

(c) Apply sealant to the lock nut.

Sealant: Part No. 08833-00080, THREE BOND 1344, LOCTITE 242 or equivalent

(d) Hold the adjusting screw in position with SST and tighten the lock nut with SST.

Torque: 1,110 kg-cm (80 ft-lb, 109 N·m)

SST 09616-30020, 09617-60010

HINT:

- Check that the bearing preload is still correct.
- Use a torque wrench with a fulcrum length of 425 mm (16.73 in.)

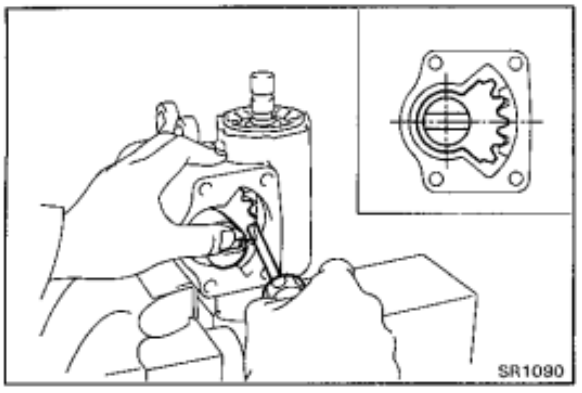

4. INSTALL SECTOR SHAFT

(a) Install the adjusting screw and thrust washer onto the sector shaft.

(b) Set the ball nut at the center of the worm shaft. Insert the sector shaft into the gear housing so that the center teeth mesh together.

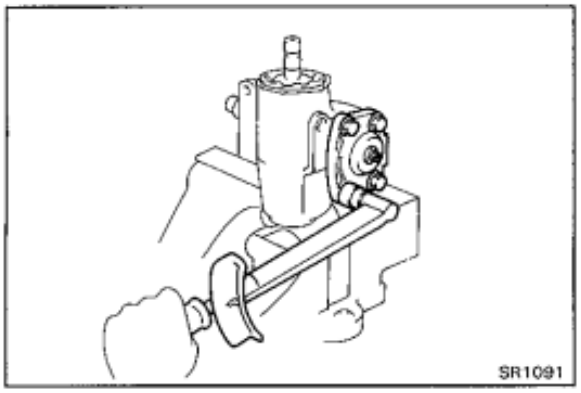

5. INSTALL END COVER

(a) Apply sealant to the gasket.

Sealant: Part No. 08833-00080, THREE BOND 1344, LOCTITE 242 or equivalent

(b) Install the end cover over the gasket.

(c) Using a screwdriver, loosen the adjusting screw as far as possible.

(d) Torque the four cover bolts.

Torque: 1,000 kg-cm (72 ft-lb, 98 N·m)

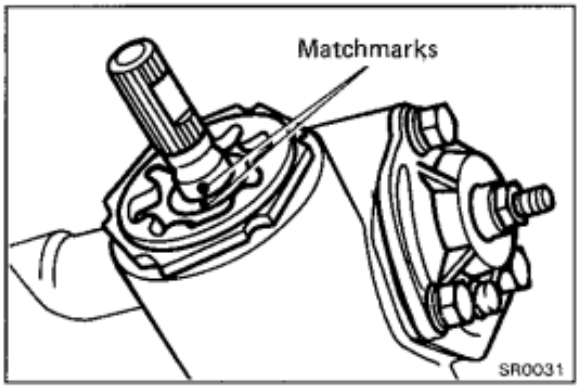

6. PLACE WORM SHAFT IN NEUTRAL POSITION

(a) Count the total shaft rotations and turn the shaft back half of that number.

(b) The worm shaft is now in neutral position.

(c) Place matchmarks on the worm shaft and housing to show neutral position.

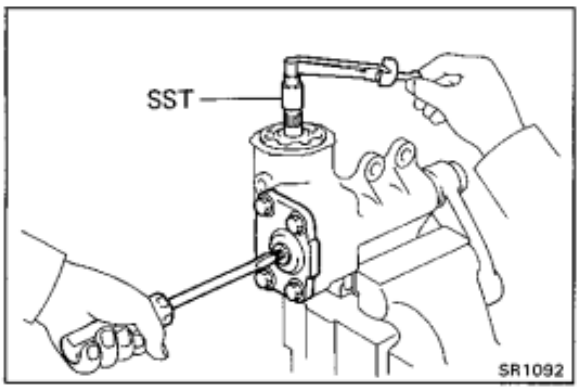

7. ADJUST TOTAL PRELOAD

Using a torque meter and SST, turn the adjusting screw while measuring the preload until it is correct.

HINT: Be sure that the worm shaft is in neutral position.

Preload (starting): 8 — 11 kg-cm (6.9 — 9.5 in.-lb, 0.78 — 1.08 N·m)

SST 09616-00010

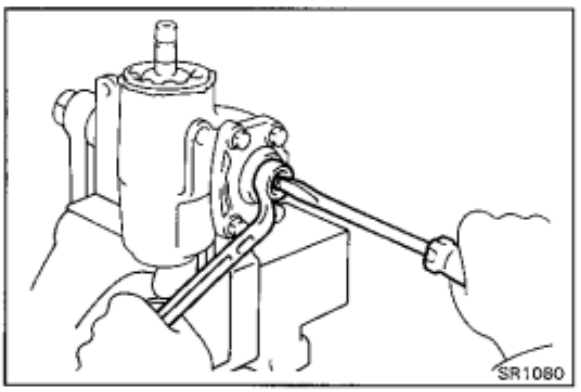

8. TIGHTEN ADJUSTING SCREW LOCK NUT

(a) Apply sealant to the lock nut.

Sealant: Part No. 08833-00080, THREE BOND 1344, LOCTITE 242 or equivalent

(b) Hold the screw with a screwdriver while tightening the lock nut.

(c) Torque the lock nut.

Torque: 450 kg-cm (33 ft-lb, 44 N·m)

HINT: Check that the preload is still correct.

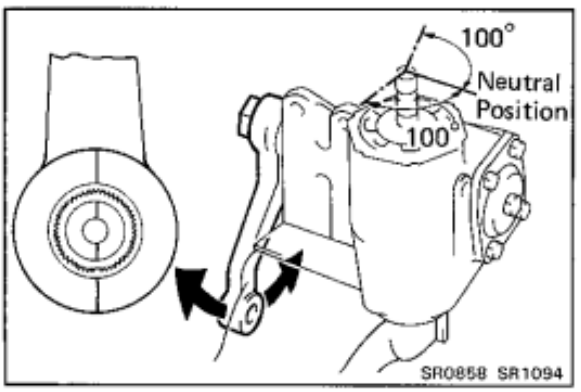

9. MEASURE SECTOR SHAFT BACKLASH

(a) Align the alignment marks on the pitman arm and sector shaft, and install the nut by hand.

(b) Install a dial indicator. Check that the sector shaft has no backlash within 100 degrees of the left and right sides from neutral position.

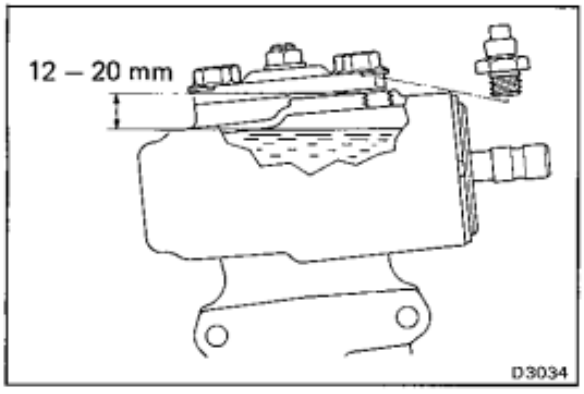

10. **REPLENISH WITH GEAR OIL**

    Oil type: API GL-4, SAE 90

    Capacity (Minimum): 640 cc (39.1 cu in.)

    Oil level: (at installation)
    12 – 20 mm (0.47 – 0.79 in.) from top

11. **INSTALL BLEEDER PLUG**

    Torque: 200 kg-cm (15 ft-lb, 20 N·m)

POWER STEERING

Description

PRINCIPLES OF POWER STEERING

Power steering is one type of a hydraulic device for utilizing engine power as a steering effort. Consequently, the engine is used to drive a pump to develop fluid pressure, and this pressure acts on a piston within the power cylinder so that the pinion assists the rack effort. The amount of this assistance depends on the extent of pressure acting on the piston. Therefore, if more steering force is required, the pressure must be raised. The variation in the fluid pressure is accomplished by a control valve which is linked to the steering main shaft.

• NEUTRAL (STRAIGHT-AHEAD) POSITION

Fluid from the pump is sent to the control valve. If the control valve is in the neutral position, all the fluid will flow pass through the control valve into the relief port and back to the pump. At this time, hardly any pressure is created and because the pressure on the cylinder piston is equal on both sides, the piston will not move in either direction.

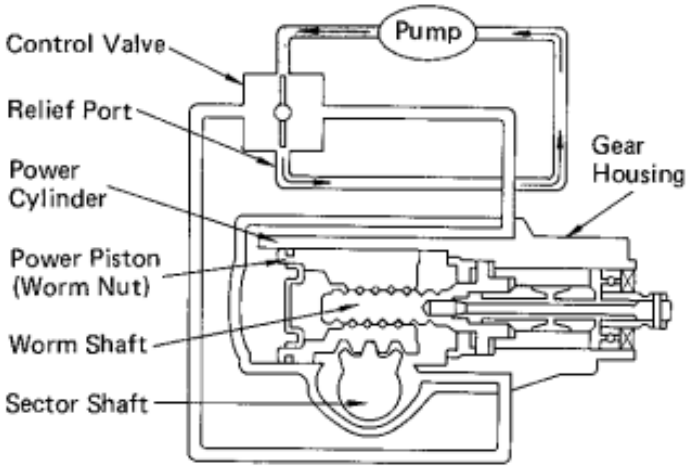

SR2452

• WHEN TURNING

When the steering main shaft is turned in either direction, the control valve also moves, closing one of the fluid passages. The other passage then opens wider, causing a change in fluid flow volume and, at the same time, pressure is created. Consequently, a pressure difference occurs between both sides of the piston and the piston moves in the direction of the lower pressure so that the fluid in that cylinder is forced back to the pump through the control valve.

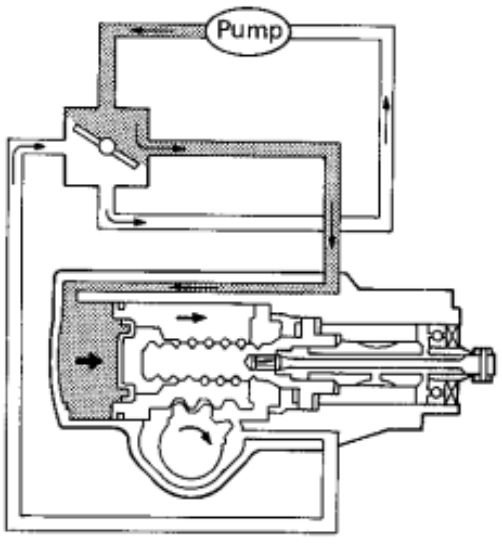

SR2453

SERVICE HINT

Troubles with the power steering system are usually concerned with hard steering due to the fact that there is no assist. In such case, before attempting to make repairs, it is necessary to determine whether the trouble lies with the pump or with the gear housing. To do this, an on-vehicle inspection can be made by using a pressure gauge.

ON-VEHICLE INSPECTION

Power steering is a hydraulic device and any problems are normally due to insufficient fluid pressure acting on the piston. This could be caused by either the pump not producting the specified fluid pressure or the control valve in the gear housing not functioning properly so that the proper amount of fluid pressure can be obtained.

If the fault lies with the pump, the same symptoms will generally occur whether the steering wheel is turned fully to the right or left. On the other hand, if the fault lies with the control velve, there will generally be a difference between the amount of assist when the steering wheel is turned to the left and right, causing harder steering. However, if the piston seal of the power cylinder is worn, there will be a loss of fluid pressure whether the steering wheel is turned to the right or left and symptoms will be the same for both.

Before performing an on-vehicle inspection, a check must first be made to confirm that the power steering system is completely free of any air. If there is any air in the system, the volume of this air will change when the fluid pressure is raised, causing a fluctuation in the fluid pressure so that the power steering will not function properly. To determine if there is any air in the system, check to see if there is a change of fluid level in the reservoir tank when the steering wheel is turned fully to the right or left.

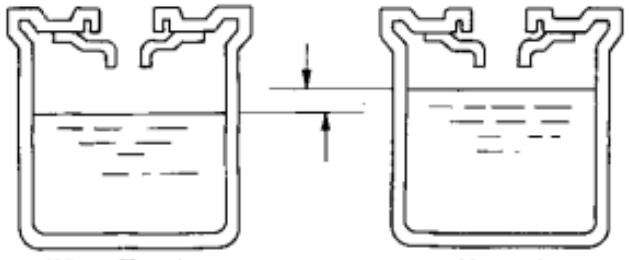

SR2392 SR2393

Also, air in the system will sometimes result in an abnormal noise occurring from the pump or gear housing when the steering wheel is fully turned in either direction. This on-vehicle inspection must always be performed to insure that the power steering system is working properly after overhauling or repairing the pump or gear housing.

VANE PUMP

The main component parts of the vane pump, such as the cam ring, rotor, vanes and flow control valve are highly precision parts and must be handled carefully. Also, because this pump produces a very high fluid pressure, O-rings are used for sealing each part. When reassembling the pump, always use new O-rings.

In the flow control valve, there is a relief valve which controls the maximum pressure of the pump. The amount of this maximum pressure is very important; if it is too low, there will be insufficient power steering assist and if too high, it will have an adverse effect on the pressure hoses, oil seals, etc. If the maximum pressure is either too high or too low due to a faulty relief valve, do not disassemble or adjust the relief valve, but replace the flow control valve as an assembly.

The clearance between the flow control valve and pump body installation hole is very important. When replacing the flow control valve, be sure to do so with one having the same mark in order to insure the proper clearance.

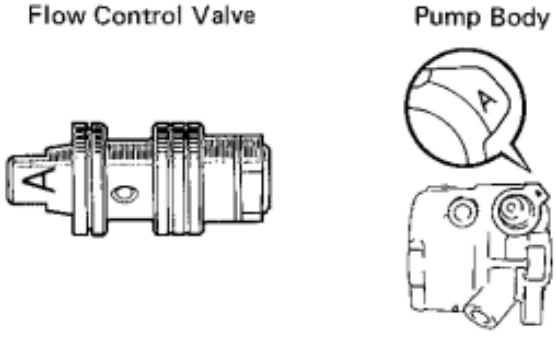

B1325 SR2434

The function parts of the pump which produce fluid pressure are the cam ring, rotor and vanes, and these should be checked to wear. If the clearance between each is not within standard when reassembling, any worn parts should be replaced. In this case, the replaced cam ring and rotor should be of the same length (have the same mark), and the vanes should be replaced with those having a length corresponding to that mark, otherwise the proper thrust clearance cannot be obtained. If there is too much thrust clearance, there will be insufficient fluid pressure at low speeds. If there is too little thrust clearance, it may result seizure of the vanes.

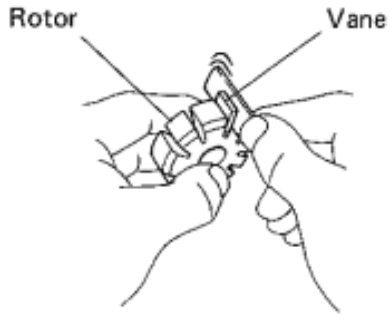

SR2397

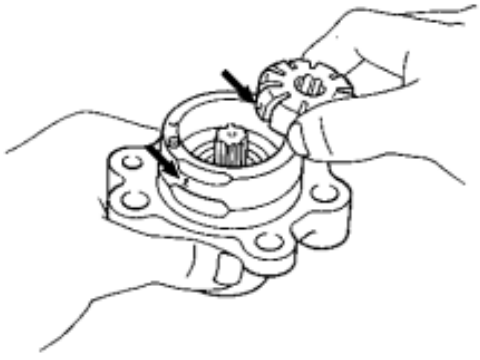

SR2398

GEAR HOUSING

Because of the high pressure, even the slightest scratch will cause fluid leakage, resulting in an inoperative power steering system.

Teflon rings are used for the cross shaft, piston and control valve. These teflon rings are highly durable against wear, but if it is necessary to replace them, be careful not to stretch the new ones. After installing a teflon ring into its groove, snug it down into the groove before assembly of the cylinder or housing to prevent possible damage.

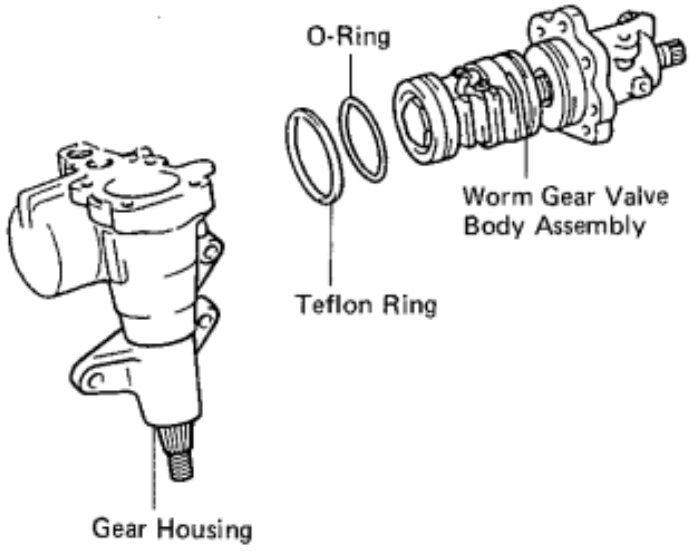

SR3616

As with the recirculating ball type steering, preload is very important. If the preload is not correct, it could result in such trouble as steering wheel play or lack of durability so always make sure that it is correct.

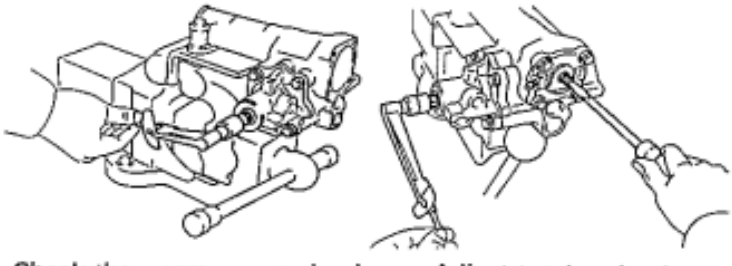

Check the worm gear preload — Adjust total preload

SR2455 SR2456

IDLE-UP DEVICE

The pump produces the maximum fluid pressure when the steering wheel is turned fully to the right or left and, at this time, there is a maximum load on the pump which causes a decrease in engine idle rpm. To solve this problem, some vehicles are equipped with an idle-up device which acts to raise the engine idle rpm whenever there is a heavy load on the pump.

EFI ENGINES

On EFI engines, when the piston of the air control valve is pushed by fluid pressure, the air valve opens and the volume of air by-passing the throttle valve is increased to regulate engine rpm.

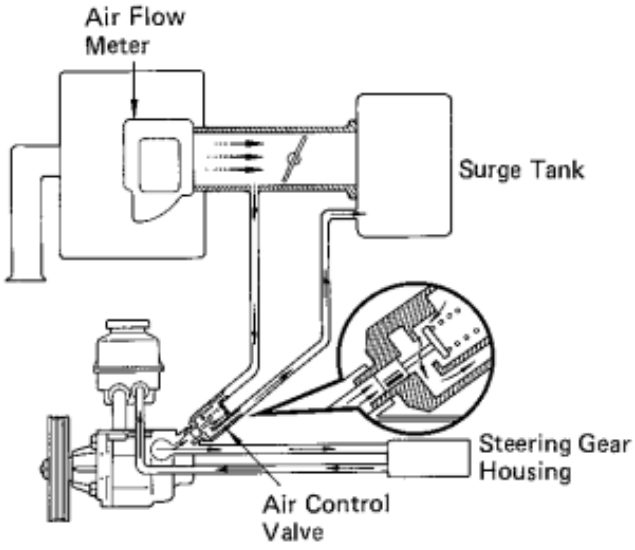

SR3154

The idle-up device functions to raise engine idle rpm when pump fluid pressure acts on the air control valve, installed to the pump body, to control the flow of air.

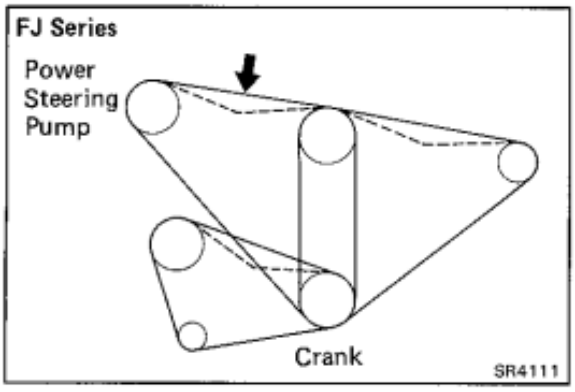

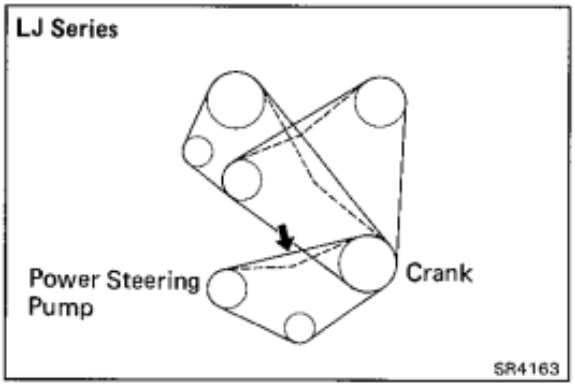

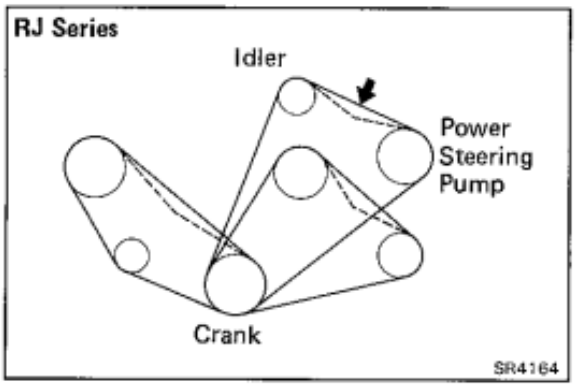

On-Vehicle Inspection

CHECK DRIVE BELT TENSION

Measure the drive belt tension.

Drive Belt tension:
[FJ Series]
New belt: 7 — 9.5 mm (0.28 — 0.37 in.)
Used belt: 8 — 10 mm (0.32 — 0.39 in.)

[LJ Series]
New belt: 8 — 12 mm (0.32 — 0.47 in.)
Used belt: 10 — 15 mm (0.39 — 0.59 in.)

[RJ Series]
New belt: 6 — 10 mm (0.24 — 0.39 in.)
Used belt: 7 — 11 mm (0.28 — 0.43 in.)

HINT:
- ''New belt'' refers to a belt which has been less than 5 minutes on a running engine.
- ''Used belt'' refers to a belt which has been used on a running engine for 5 minutes or more.

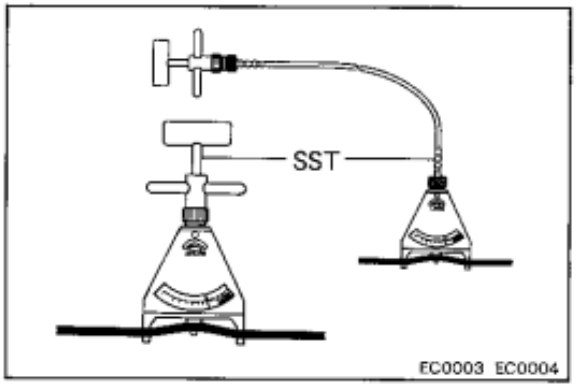

(Reference)

- Using SST, check the drive belt tension.

SST 09216-00020 and 09216-00030

Drive belt tension:
New belt: 45 — 55 kg
Used belt: 20 — 35 kg

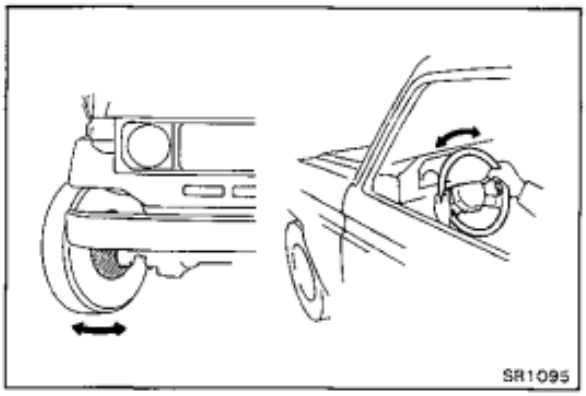

FLUID LEVEL CHECK

1. **KEEP VEHICLE LEVEL**

2. **BOOST FLUID TEMPERATURE**

   With the engine idling at 1,000 rpm or less, turn the steering wheel from lock to lock several times to boost fluid temperature.

   Fluid temperature: 80°C (176°F)

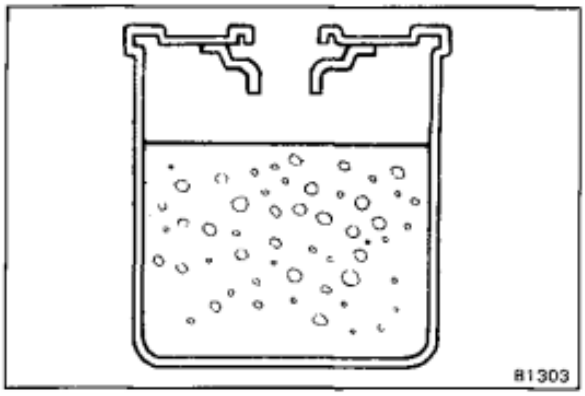

3. **CHECK FOR FOAMING OR EMULSIFICATION**

   HINT: Foaming and emulsification indicate either the existence of air in the system or that the fluid level is too low.

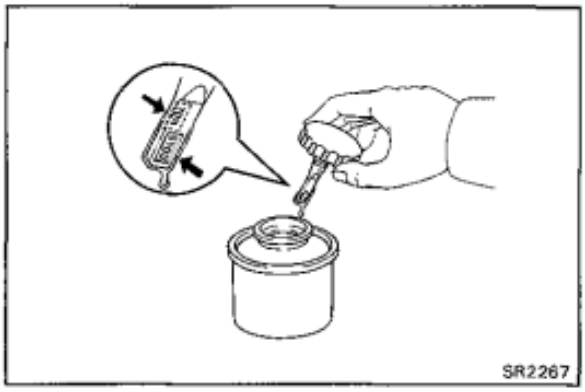

4. **CHECK FLUID LEVEL IN RESERVOIR**

   Check the fluid level and add fluid if necessary.

   Fluid: ATF DEXRON® II

   HINT: Check that the fluid level is within the HOT LEVEL of the dipstick. If the fluid is cold, check that it is within the COLD LEVEL of the dipstick.

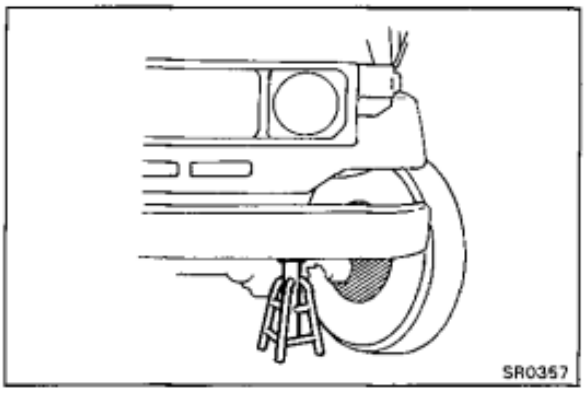

REPLACEMENT OF POWER STEERING FLUID

1. **JACK UP FRONT OF VEHICLE AND SUPPORT IT WITH STANDS**

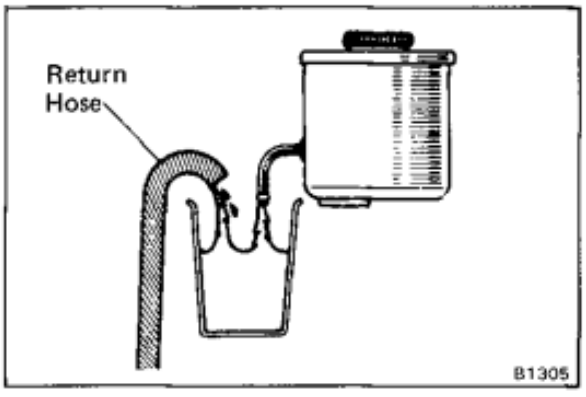

2. **REMOVE FLUID RETURN HOSE FROM RESERVOIR TANK AND DRAIN FLUID INTO CONTAINER**

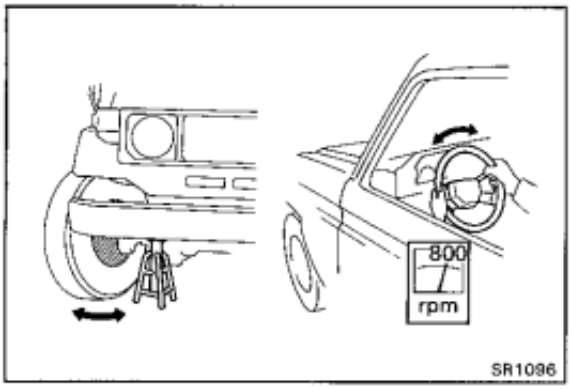

3. **TURN STEERING WHEEL FROM LOCK TO LOCK WHILE DRAINING FLUID**

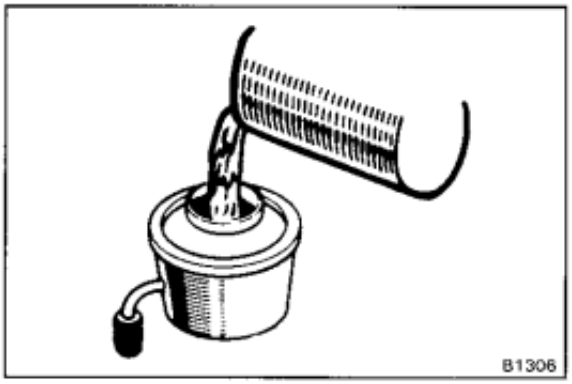

4. **FILL RESERVOIR TANK WITH FRESH FLUID**

Fluid : ATF DEXRON® II

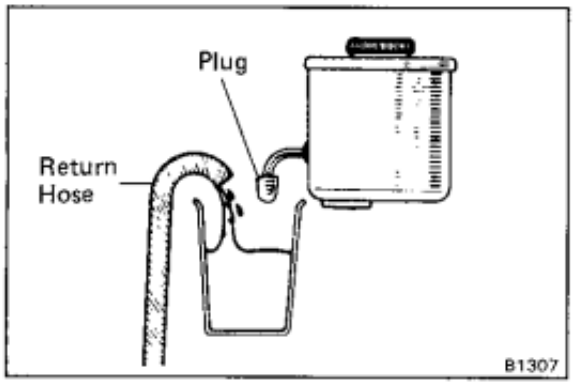

5. **START ENGINE AND RUN IT AT 1,000 RPM**

After 1 or 2 seconds, fluid will begin to discharge from the return hose. Stop the engine immediately at this time.

NOTICE: Take care that some fluid remains left in the reservoir tank.

6. **REPEAT STEPS 4 AND 5 FOUR OR FIVE TIMES UNTIL THERE IS NO MORE AIR IN FLUID**

7. **CONNECT RETURN HOSE TO RESERVOIR TANK**

8. **BLEED POWER STEERING SYSTEM**

BLEEDING OF POWER STEERING SYSTEM

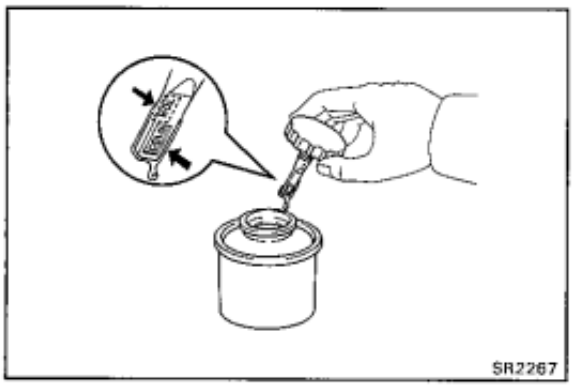

1. **CHECK FLUID LEVEL IN RESERVOIR TANK**

Check the fluid level and add fluid if necessary.

Fluid: ATF DEXRON® II

HINT: Check that the fluid level is within the HOT LEVEL of the dipstick. If the fluid is cold, check that it is within the COLD LEVEL of the dipstick.

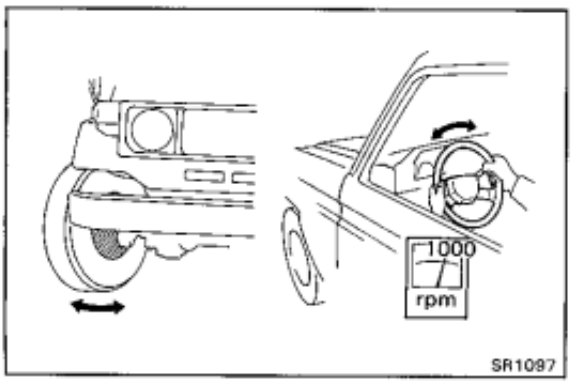

2. **START ENGINE AND TURN STEERING WHEEL FROM LOCK TO LOCK THREE OR FOUR TIMES**

With the engine speed below 1,000 rpm, turn the steering wheel to left or right full lock and keep it there for 2 — 3 seconds, then turn the wheel to the reverse full lock and keep it there for 2 — 3 seconds.

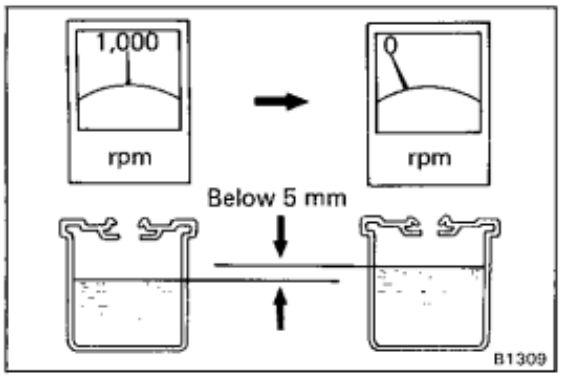

3. CHECK THAT FLUID IN RESERVOIR IS NOT FOAMY OR CLOUDY AND DOES NOT RISE OVER MAXIMUM WHEN ENGINE IS STOPPED

Measure the fluid level with the engine running. Stop the engine and measure the fluid level.

Maximum rise: 5 mm (0.20 in.)

If a problem is found, repeat steps 4 and 5 on page SR-35.

Repair the PS if the problem persists.

OIL PRESSURE CHECK

1. CONNECT PRESSURE GAUGE

(a) Using SST, disconnect the pressure line joint.

SST 09631-22020

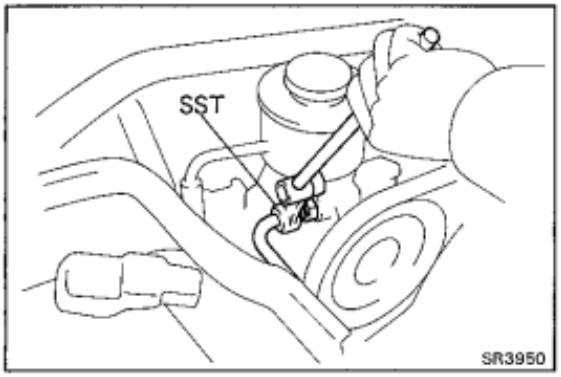

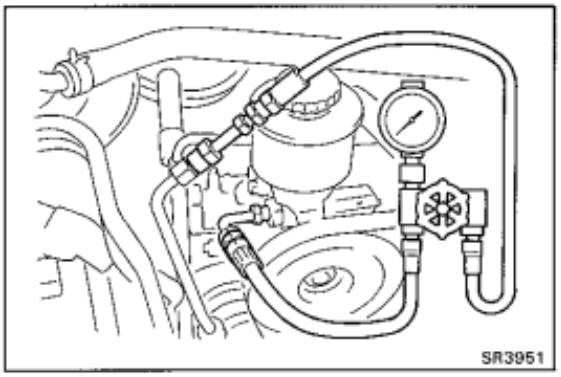

(b) Connect the gauge side of the pressure gauge to the PS pump side and the valve side to the pressure line side.

(c) Bleed the system. Start the engine and turn the steering wheel from lock to lock two or three times.

(d) Check that the fluid level is correct.

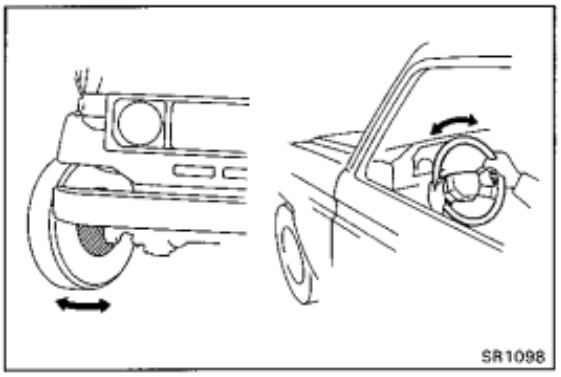

2. CHECK THAT FLUID TEMPERATURE IS AT LEAST 80°C (176°F)

3. START ENGINE AND RUN IT AT IDLE

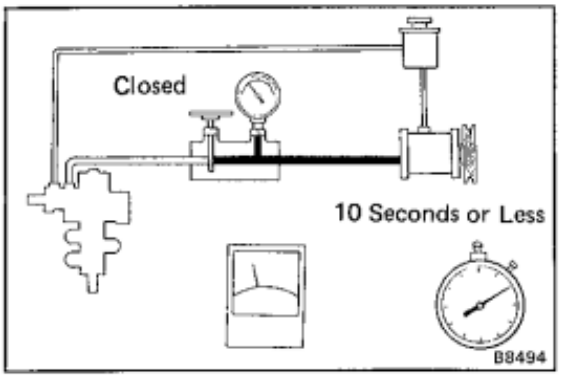

4. CHECK FLUID PRESSURE READING WITH VALVE CLOSED

Close the pressure gauge valve and observe the reading on the gauge.

Minimum pressure: FJ Series
80 kg/cm^2 (1,138 psi, 7,845 kPa)
HZJ and PZJ Series
85 kg/cm^2 (1,209 psi, 8,336 kPa)
LJ and RJ Series
75 kg/cm^2 (1,067 psi, 7,355 kPa)

NOTICE:

- **Do not keep the valve closed for more than 10 seconds.**
- **Do not let the fluid temperature become too high.**

If pressure is low, repair or replace the PS pump.

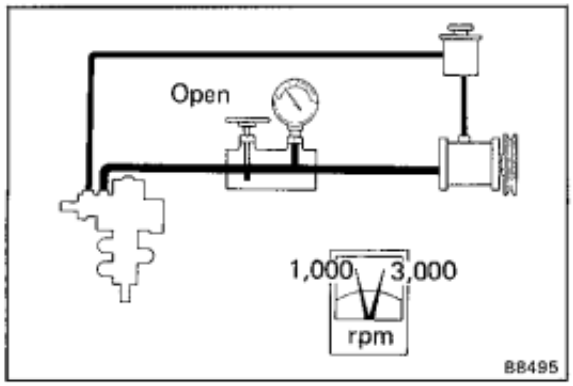

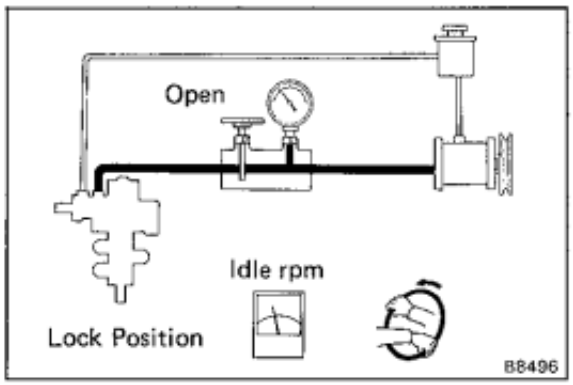

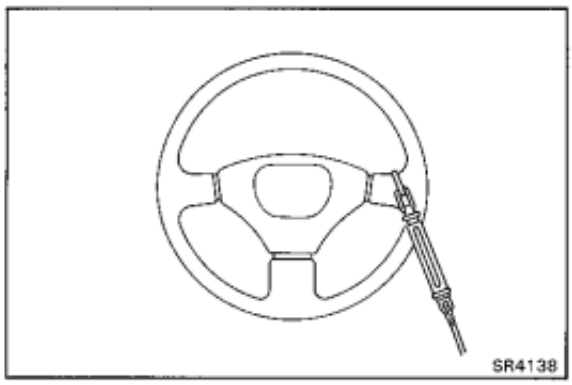

5. OPEN VALVE FULLY

6. CHECK AND RECORD PRESSURE READING AT 1,000 RPM

7. CHECK AND RECORD PRESSURE READING AT 3,000 RPM

Check that there is 5 kg/cm^2 (71 psi, 490 kPa) or less difference in pressure between the 1,000 rpm and 3,000 rpm checks.

If the difference is excessive, repair or replace the flow control valve of the PS pump.

8. CHECK PRESSURE READING WITH STEERING WHEEL TURNED TO FULL LOCK

Be sure the pressure gauge valve is fully opened and the engine idling.

Minimum pressure: **FJ Series**
80 kg/cm^2 (1,138 psi, 7,845 kPa)
HZJ and PZJ Series
85 kg/cm^2 (1,209 psi, 8,336 kPa)
LJ and RJ Series
75 kg/cm^2 (1,067 psi, 7,355 kPa)

NOTICE:

- **Do not maintain lock position for more than 10 seconds.**
- **Do not let the fluid temperature become too high.**

If pressure is low, the gear housing has an internal leak and must be repaired or replaced.

9. MEASURE STEERING EFFORT

(a) Center the steering wheel and run the engine at idle.

(b) Using a spring scale, measure the steering effort in both directions.

Maximum steering effort: 4 kg (8.8 lb, 39 N)

If steering effort is excessive, repair the power steering unit.

HINT: Be sure to consider tire type, pressure and contact surface before making your diagnosis.

Power Steering Pump

REMOVAL AND INSTALLATION OF POWER STEERING PUMP

Remove and install the parts as shown.

FJ Series

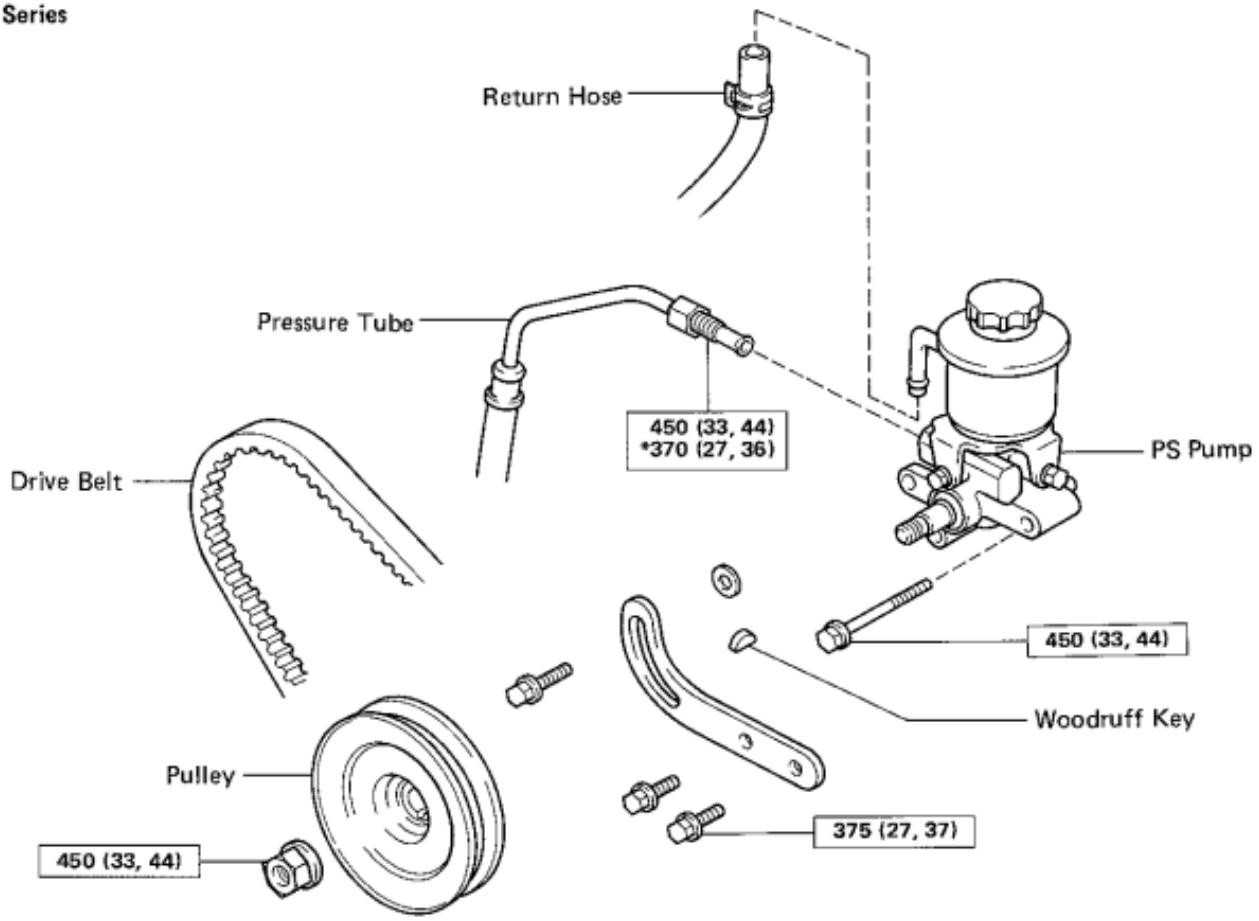

HZJ and PZJ Series

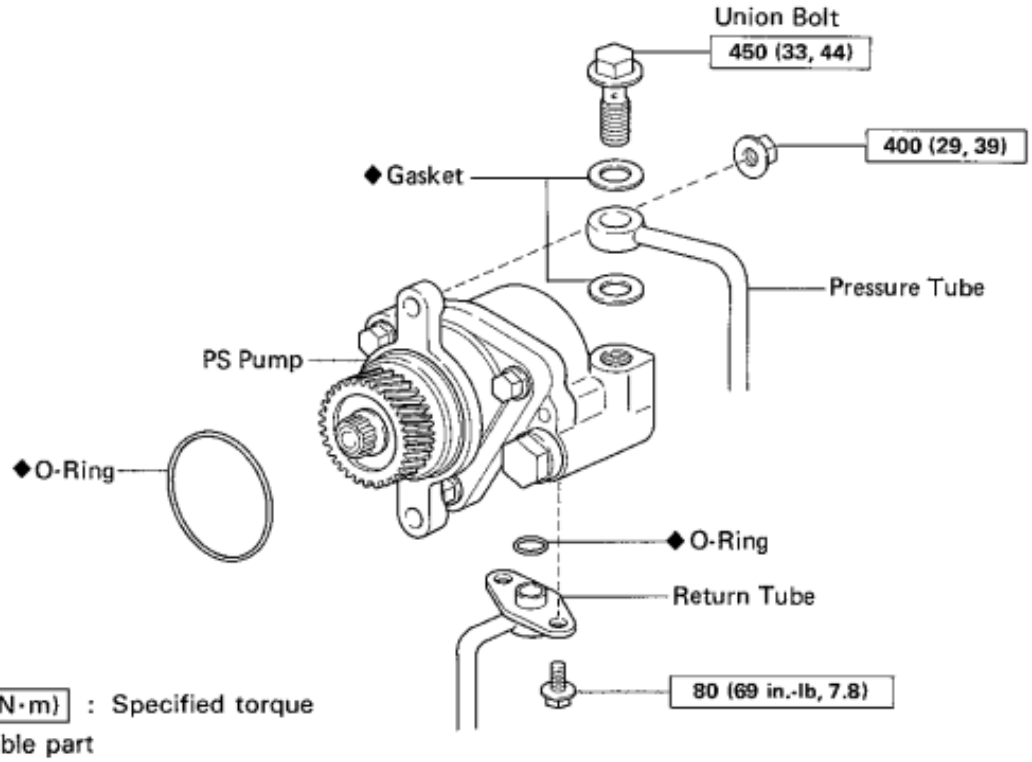

kg-cm (ft-lb, N·m) : Specified torque

◆ Non-reusable part

* For use of SST

SR4139

LJ and RJ Series

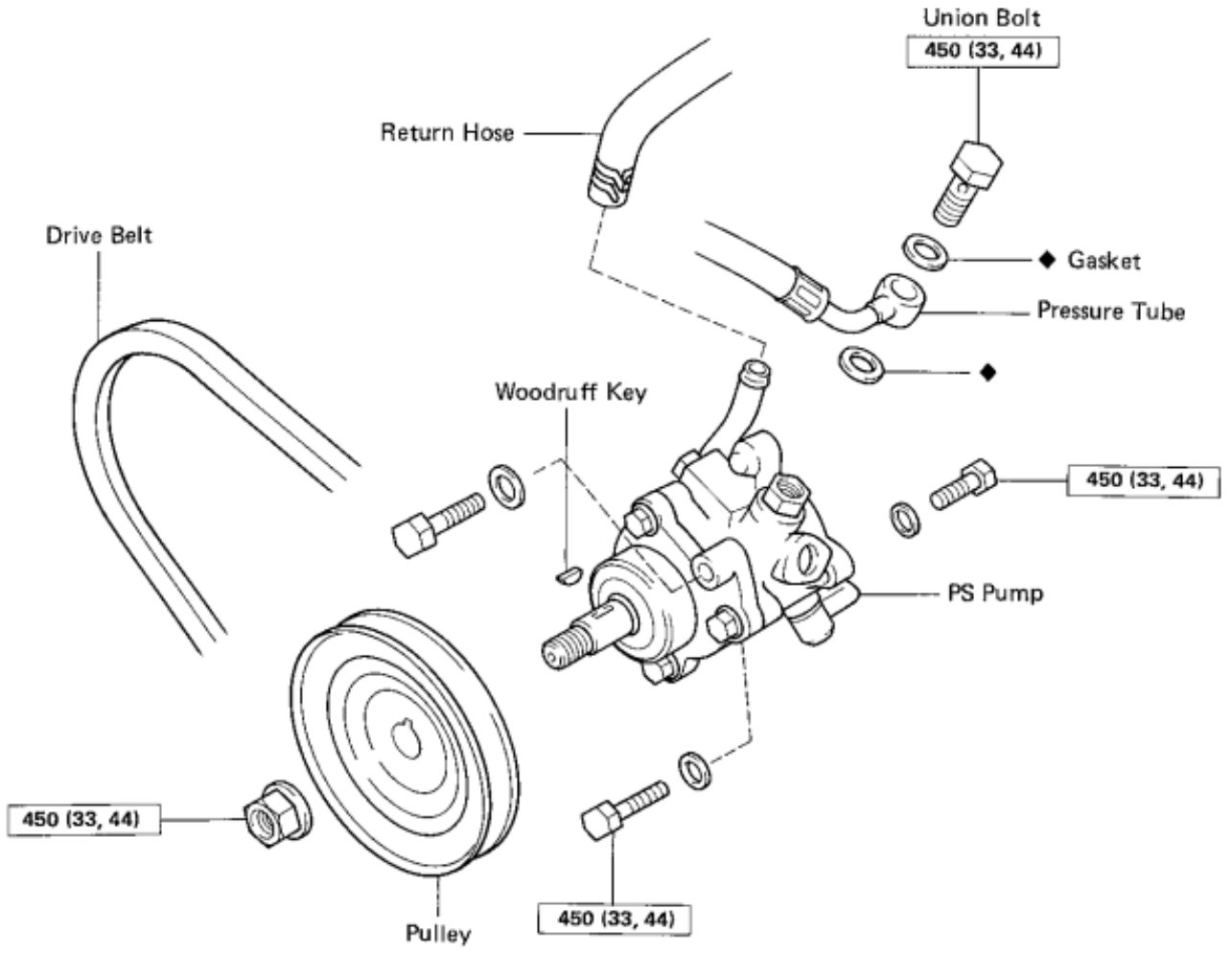

kg-cm (ft-lb, N·m) : Specified torque
◆ Non-reusable part

SR4145

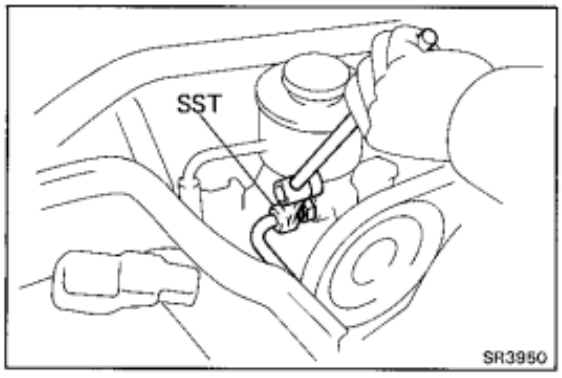

SR3950

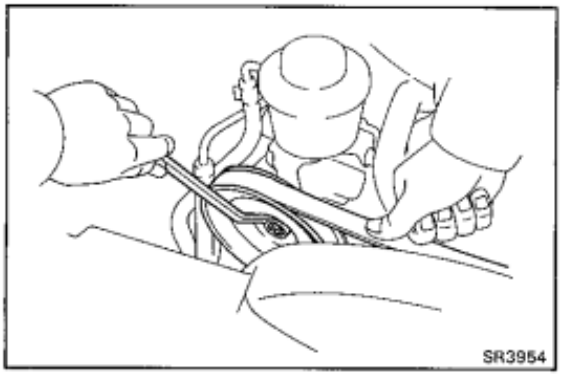

SR3954

(MAIN POINT OF REMOVAL AND INSTALLATION)

1. **(FJ Series)**
DISCONNECT AND CONNECT PRESSURE TUBE

Using SST, disconnect and connect the pressure tube from/to the PS pump.

SST 09631-22020

Torque: 370 kg-cm (27 ft-lb, 36 N·m)

HINT: Use a torque wrench with a fulcrum length of 300mm (11.81 in.).

2. **(Ex. HZJ and PZJ Series)**
LOOSEN PULLEY NUT

Push on the drive belt with your hand to hold the pulley in place and loosen the pulley nut.

3. **(Ex. HZJ and PZJ Series)**
ADJUST DRIVE BELT TENSION AFTER INSTALLING PS PUMP
(See page SR-33)

COMPONENTS (FJ series)

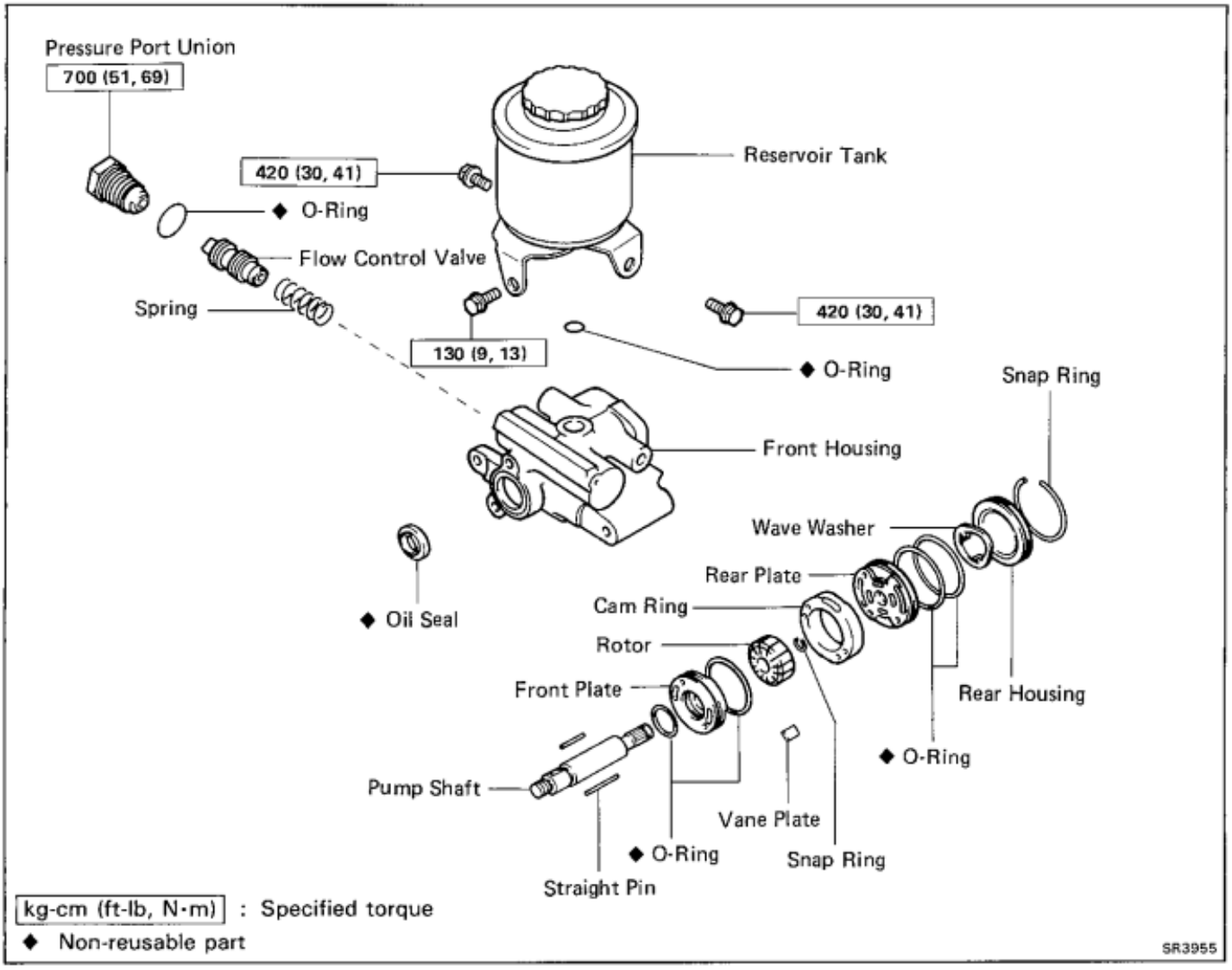

DISASSEMBLY OF POWER STEERING PUMP

1. **CLAMP PS PUMP IN VISE**

   NOTICE: Do not tighten the vise too tight.

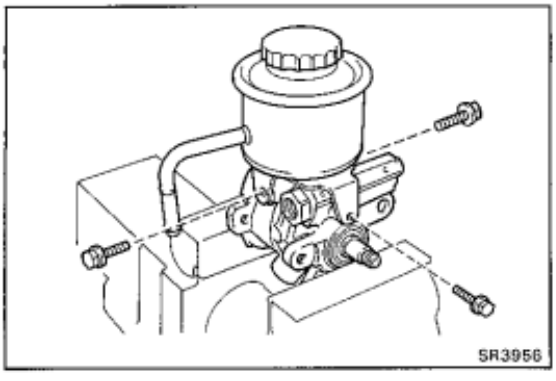

2. **REMOVE RESERVOIR TANK**

   (a) Remove the three bolts and reservoir tank.

   (b) Remove the O-ring from the reservoir tank.

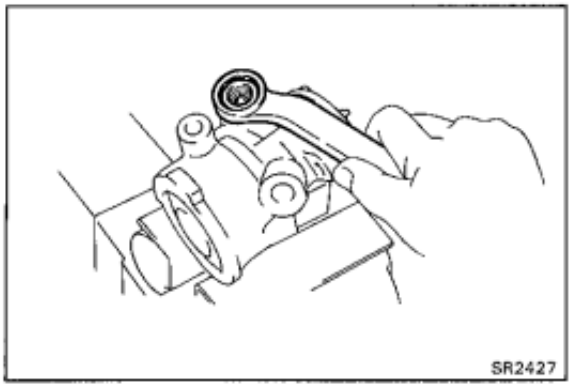

3. REMOVE PRESSURE PORT UNION AND FLOW CONTROL VALVE

(a) Remove the pressure port union.

(b) Remove the O-ring from the pressure port union.

(c) Remove the flow control valve and spring.

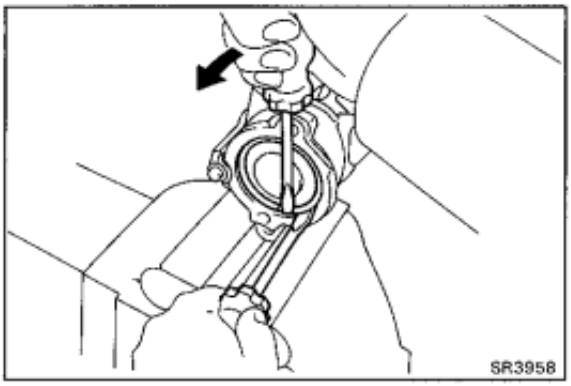

4. REMOVE REAR HOUSING

(a) Using two screwdrivers, remove the snap ring.

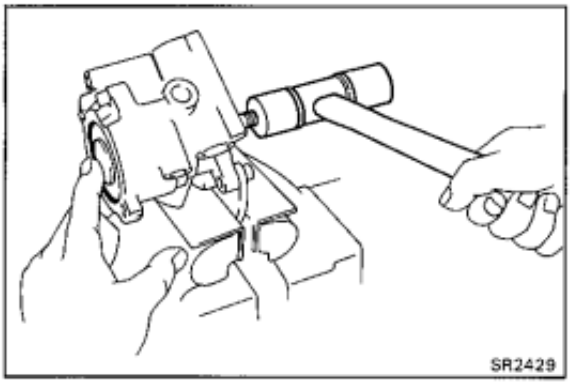

(b) Using a plastic hammer, tap out the rear housing and wave washer.

(c) Remove the O-ring from the rear housing.

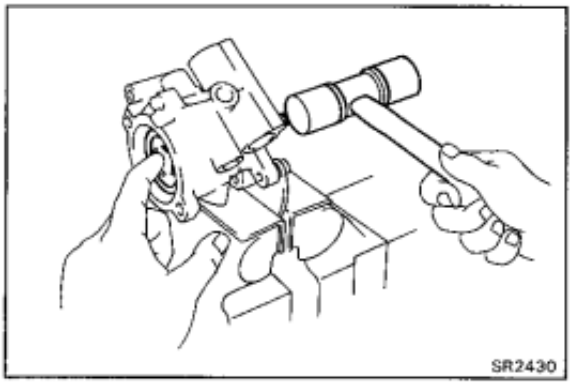

5. REMOVE REAR PLATE

(a) Using a plastic hammer, tap the shaft end and remove the rear plate.

(b) Remove the O-ring from the rear plate.

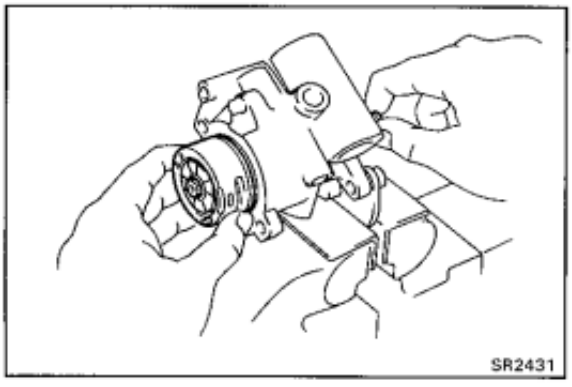

6. REMOVE PUMP SHAFT, CAM RING AND VANE PLATES

(a) Remove the pump shaft with the cam ring, vane plates from the front housing.

(b) Remove the cam ring and ten vane plates from the pump shaft.

(c) Remove the longer straight pin from the front housing.

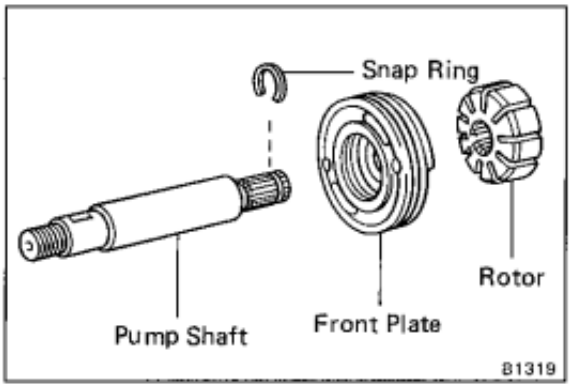

7. **REMOVE ROTOR AND FRONT PLATE**

(a) Using a screwdriver, remove the snap ring.

(b) Remove the rotor and front plate from the pump shaft.

(c) Remove the two O-rings from the front plate.

(d) Remove the straight pin from the front plate.

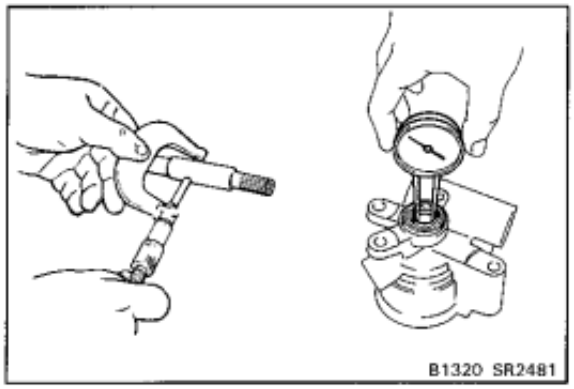

INSPECTION OF POWER STEERING PUMP

1. **CHECK OIL CLEARANCE OF SHAFT AND BUSHING**

Using a micrometer and calipers, check the oil clearance.

Standard clearance: **0.01—0.03 mm (0.0004—0.0012 in.)**

Maximum clearance: **0.07 mm (0.0028 in.)**

If more than maximum, replace the entire PS pump.

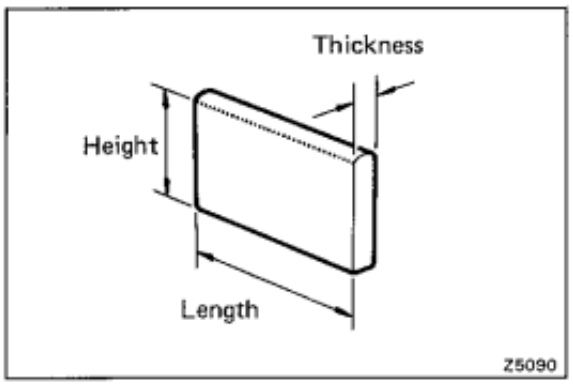

2. **INSPECT ROTOR AND VANE PLATES**

(a) Using a micrometer, measure the height, thickness and length of the vane plate.

Minimum height: **8.1 mm (0.319 in.)**

Minimum thickness: **1.797 mm (0.0707 in.)**

Minimum length: **14.988 mm (0.5901 in.)**

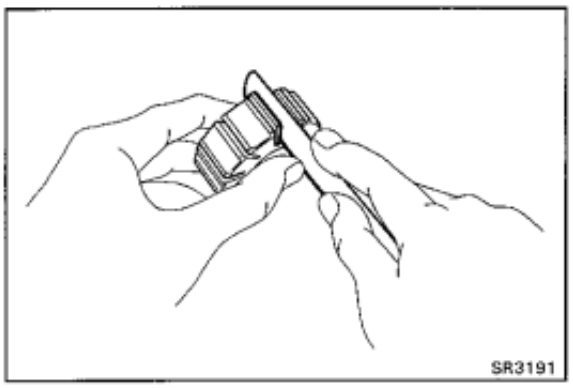

(b) Using a feeler gauge, measure the clearance between the rotor groove and vane plate.

Maximum clearance: **0.028 mm (0.0011 in.)**

If more than maximum, replace the pump plate and/or rotor with one having the same mark stamped on the cam ring.

Inscribed mark: **1, 2, 3, 4 or None**

HINT: There are five vane lengths with the following rotor and cam ring marks:

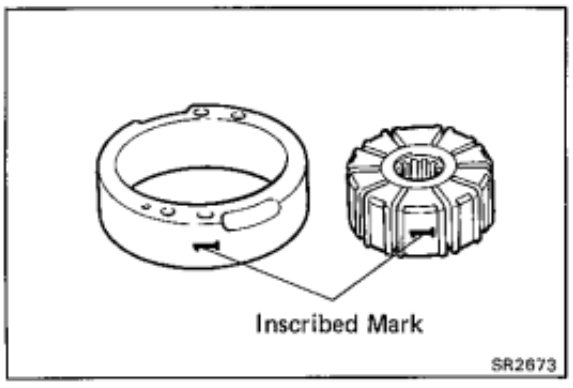

Rotor and cam ring mark	Vane length mm (in.)
None	14.996 — 14.998 (0.5904 — 0.5905)
1	14.994 — 14.996 (0.5903 — 0.5904)
2	14.992 — 14.994 (0.5902 — 0.5903)
3	14.990 — 14.992 (0.59016 — 0.59024)
4	14.988 — 14.990 (0.5901 — 0.5902)

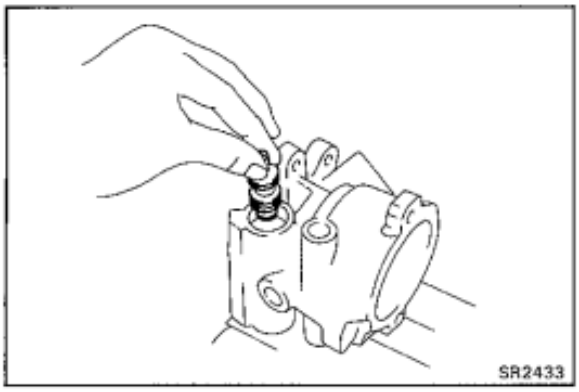
SR2433

3. INSPECT FLOW CONTROL VALVE

(a) Coat the valve with power steering fluid and check that it falls smoothly into the valve hole by its own weight.

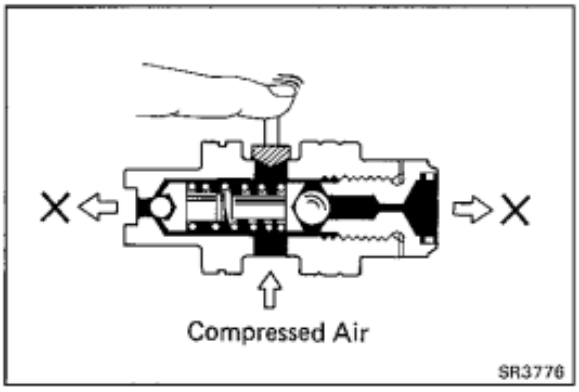

SR3776

(b) Check the flow control valve for leakage.

Close one of the holes and apply compressed air [4 or 5 kg/cm^2 (57 or 71 psi, 392 or 490 kPa)] into the opposite side, and confirm that air does not come out from the end hole.

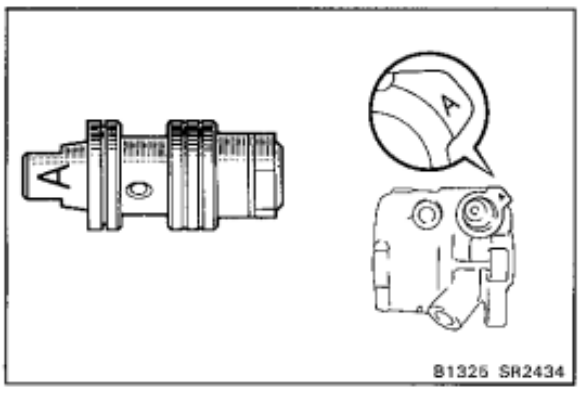

B1325 SR2434

If necessary, replace the valve with one having the same letter as inscribed on the front housing.

Inscribed mark: A, B, C, D, E or F

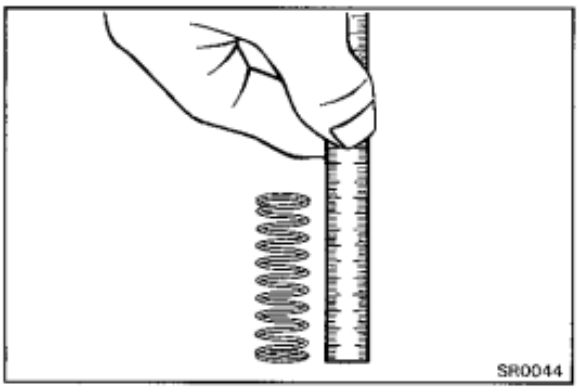
SR0044

4. INSPECT FLOW CONTROL SPRING

Using a scale, measure the free length of the spring.

Spring length: 35 — 37 mm (1.38 — 1.46 in.)

If not within specification, replace the spring.

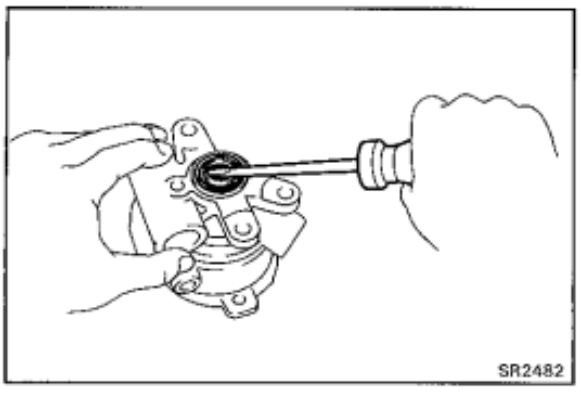
SR2482

5. IF NECESSARY, REPLACE OIL SEAL

(a) Using a screwdriver, pry out the oil seal.

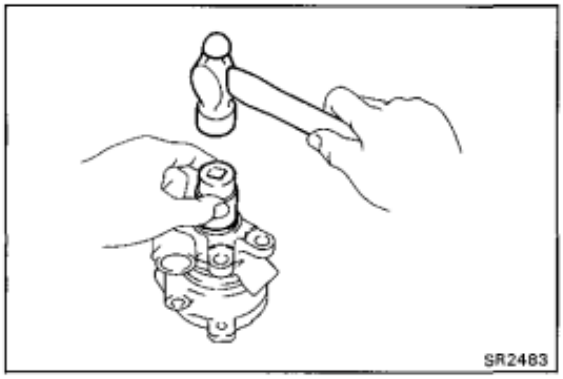

(b) Using a socket wrench and hammer, drive in a new oil seal.

ASSEMBLY OF POWER STEERING PUMP

(See page SR-40)

1. COAT ALL SLIDING SURFACES WITH POWER STEERING FLUID BEFORE ASSEMBLY

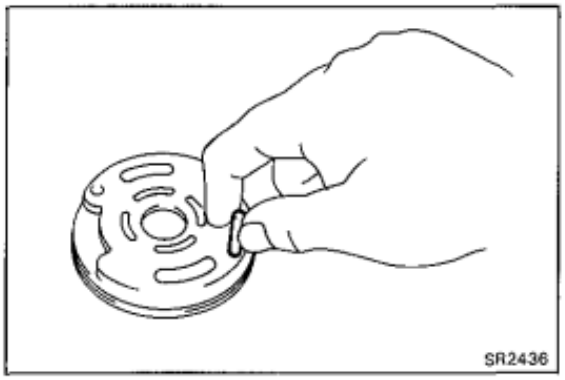

2. INSTALL FRONT PLATE AND ROTOR TO PUMP SHAFT

(a) Install the shorter straight pin to the front plate.

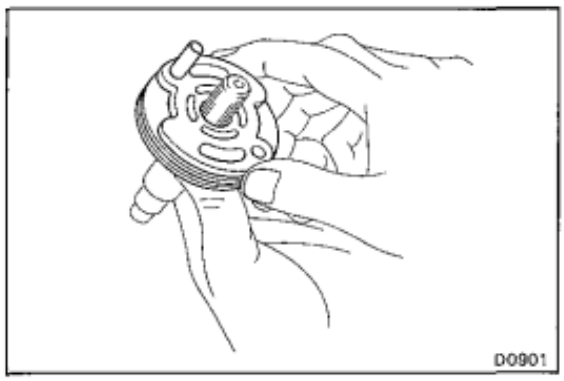

(b) Install two new O-rings to the front plate.

(c) Install the front plate to the pump shaft.

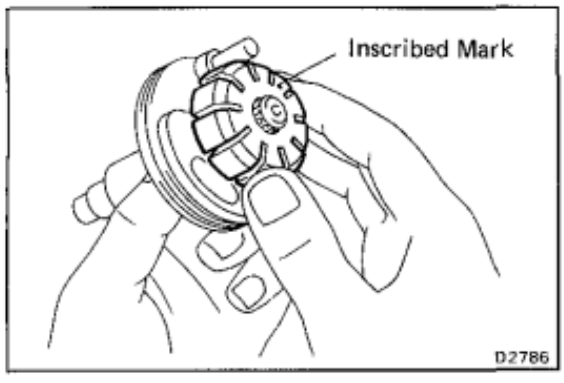

(d) Install the rotor to the pump shaft with the inscribed mark facing outward.

(e) Install the snap ring.

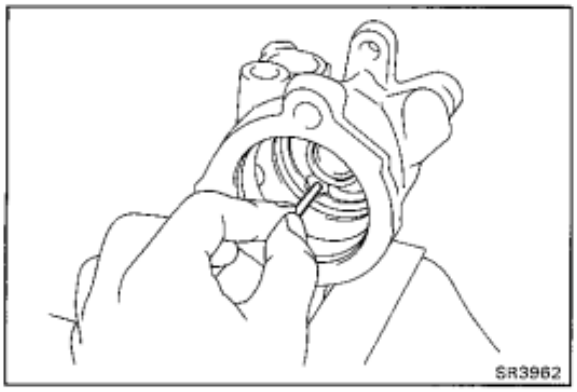

3. INSTALL PUMP SHAFT TO FRONT HOUSING

(a) Coat the oil seal lip with MP grease.

(b) Install the longer straight pin to the front housing.

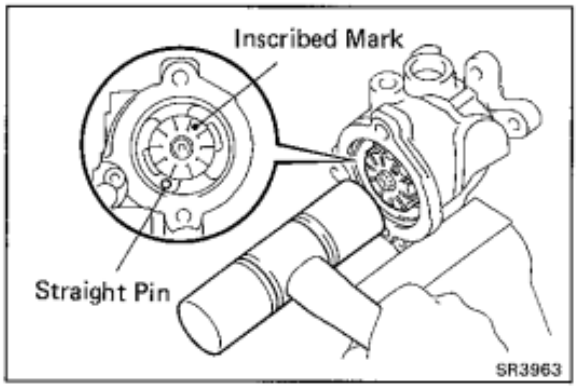

(c) Align the hole of the front plate and straight pin and tap in the pump shaft with a plastic hammer.

HINT: Be careful not to damage the oil seal and O-rings.

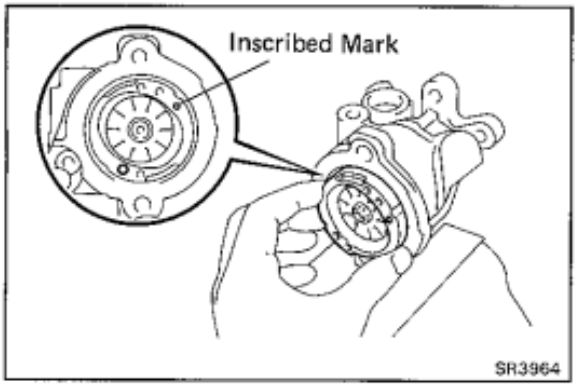

4. INSTALL CAM RING

Align the oval hole of the cam ring and longer straight pin, and insert the cam ring with the inscribed mark facing outward.

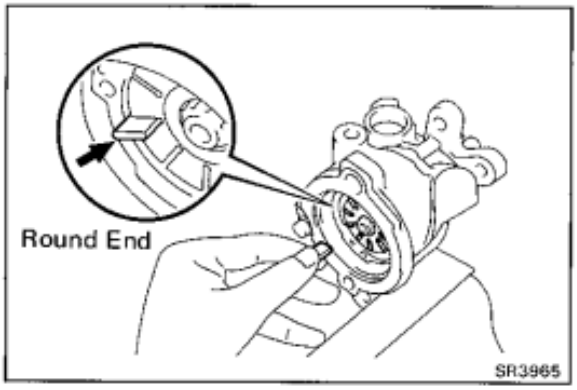

5. INSTALL VANE PLATES

Install the ten vane plates with the round end facing outward.

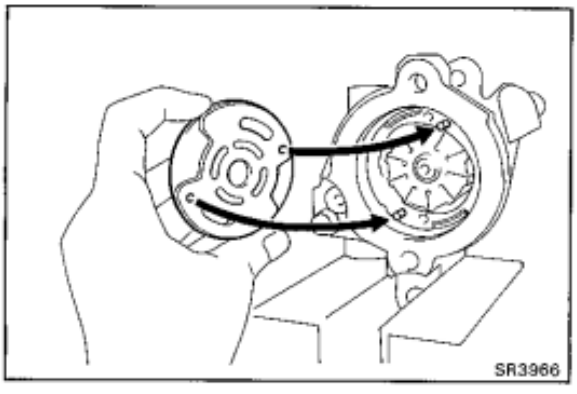

6. INSTALL REAR PLATE

(a) Install a new O-ring to the rear plate.

(b) Align the holes of the rear plate with the pins, and install the plate.

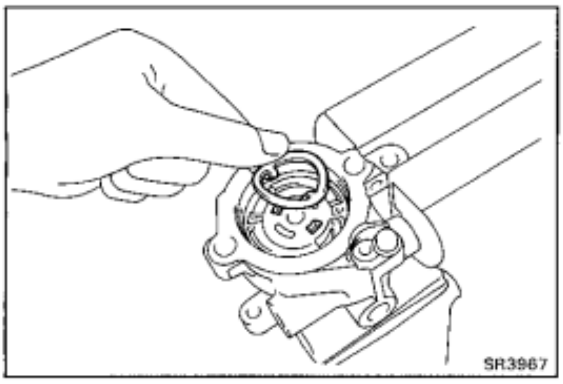
SR3967

7. INSTALL REAR HOUSING

(a) Install the wave washer.

(b) Install a new O-ring to the rear housing.

(c) Using a plastic hammer, tap in the rear housing.

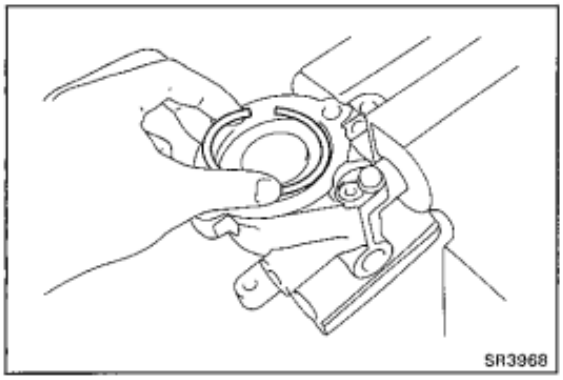
SR3968

(d) Install the snap ring.

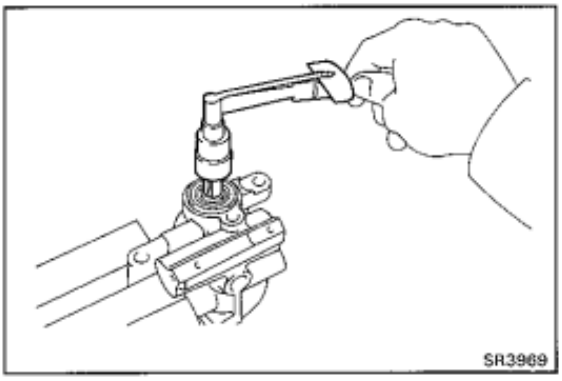
SR3969

8. CHECK PUMP SHAFT PRELOAD

(a) Check that the shaft rotates smoothly without abnormal noise.

(b) Temporarily install the pulley nut and check the rotating torque.

Rotating torque: 2.8 kg-cm (2.4 in.-lb, 0.3 N·m) or less

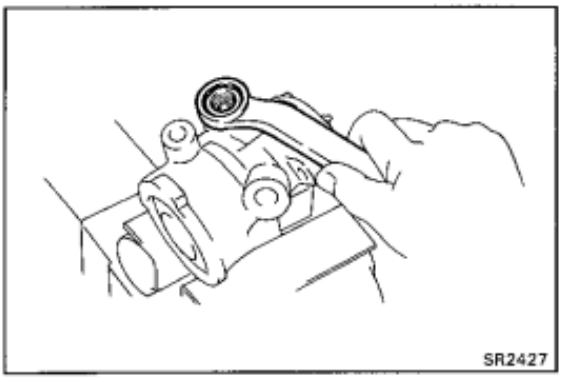
SR2427

9. INSTALL SPRING, FLOW CONTROL VALVE AND PRESSURE PORT UNION

(a) Install the spring and the valve into the housing.

(b) Install a new O-ring in the groove of the pressure port union.

(c) Install and torque the pressure port union.

Torque: 700 kg-cm (51 ft-lb, 69 N·m)

10. INSTALL RESERVOIR TANK

(a) Install a new O-ring to the reservoir tank.

(b) Install the reservoir tank to the housing and torque the three bolts.

Torque: 12 mm bolt 130 kg-cm (9 ft-lb, 13 N·m)
14 mm bolt 420 kg-cm (30 ft-lb, 41 N·m)

COMPONENTS (HZJ and PZJ series)

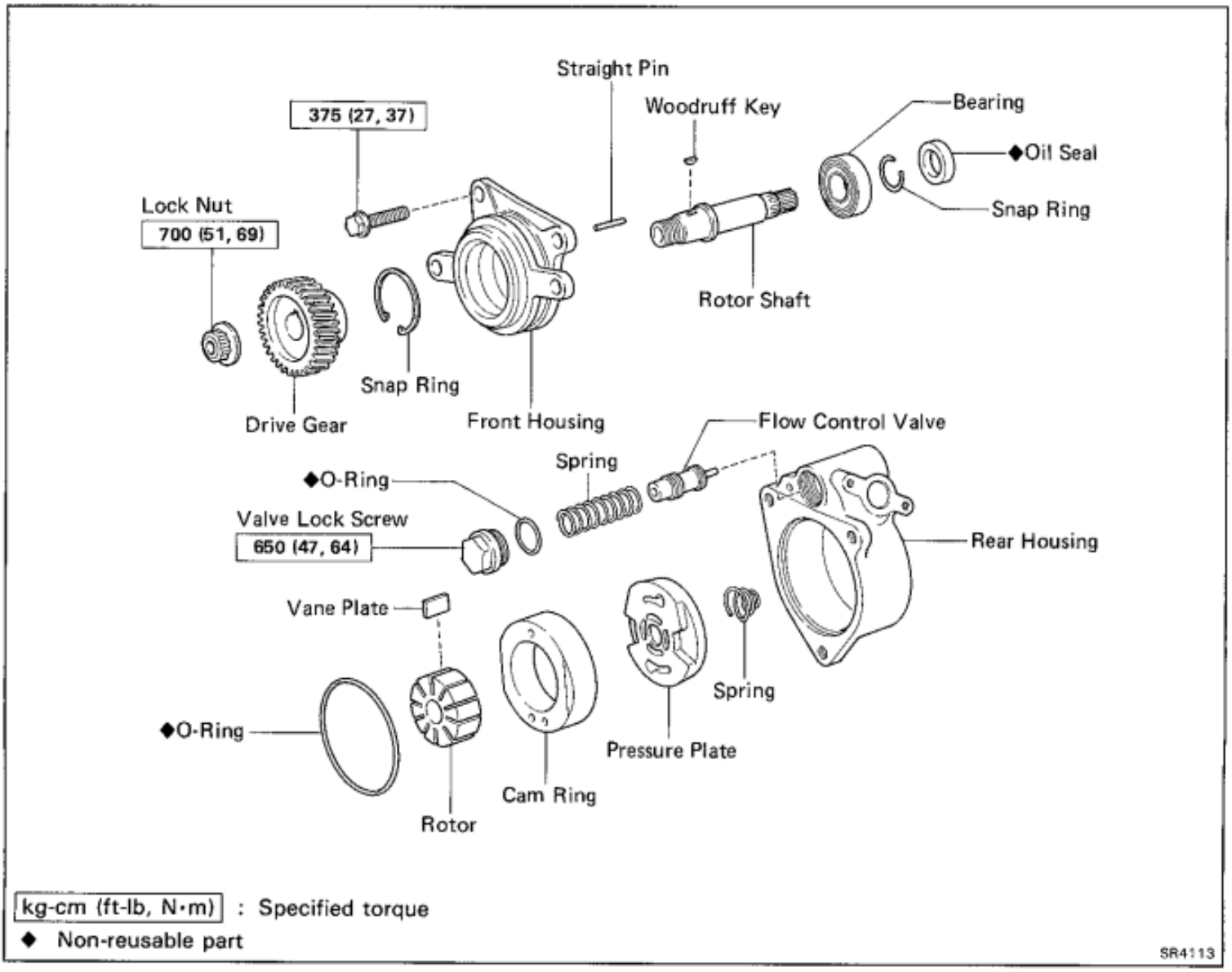

kg-cm (ft-lb, N·m) : Specified torque

◆ Non-reusable part

SR4113

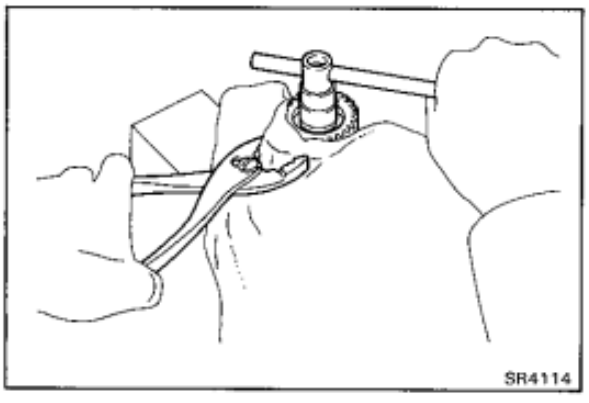

SR4114

DISASSEMBLY OF POWER STEERING PUMP

1. REMOVE DRIVE GEAR

(a) While holding the driver gear with pliers, remove the lock nut.

HINT: Place the workshop rag over the gear to prevent damaging it.

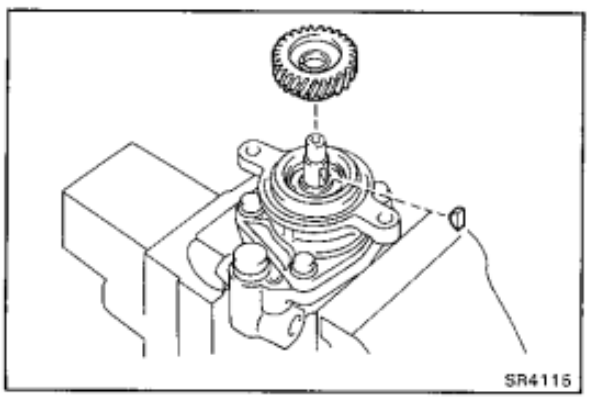

SR4115

(b) Remove the gear and woodruff key.

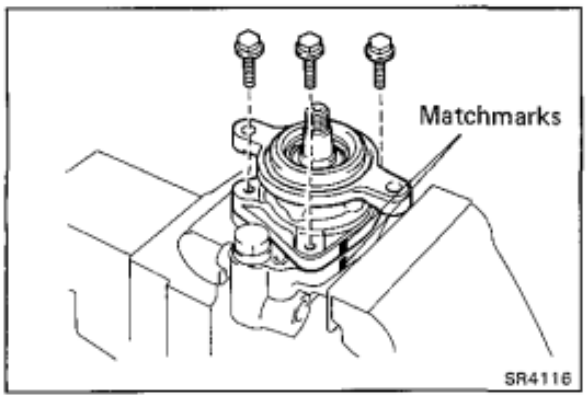

2. REMOVE FRONT HOUSING

(a) Place matchmarks on the front and rear housing.

(b) Remove three bolts and the front housing.

(c) Remove the O-ring from the front housing.

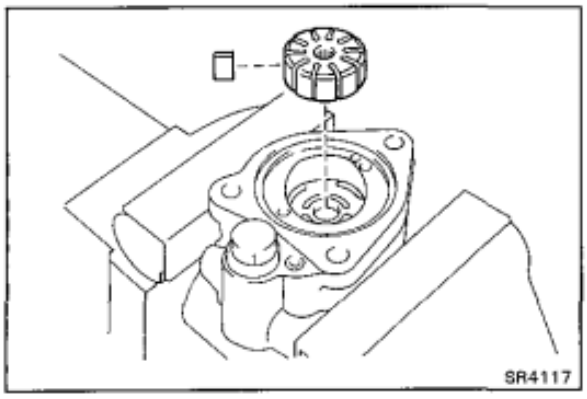

3. REMOVE ROTOR AND VANE PLATE

NOTICE: Be careful that the vane plates and rotor do not fall out.

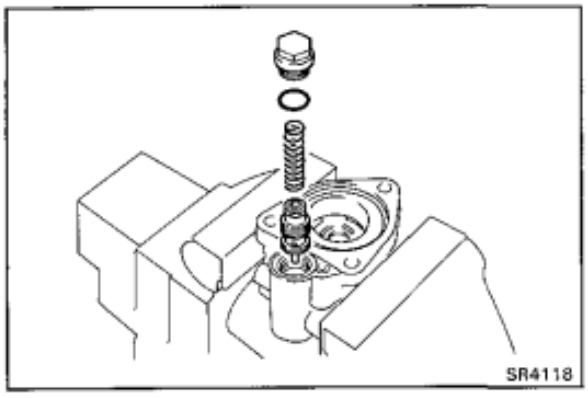

4. REMOVE VALVE LOCK SCREW, SPRING AND FLOW CONTROL VALVE

(a) Remove the valve lock screw, spring and control valve.

(b) Remove the O-ring from the valve lock screw.

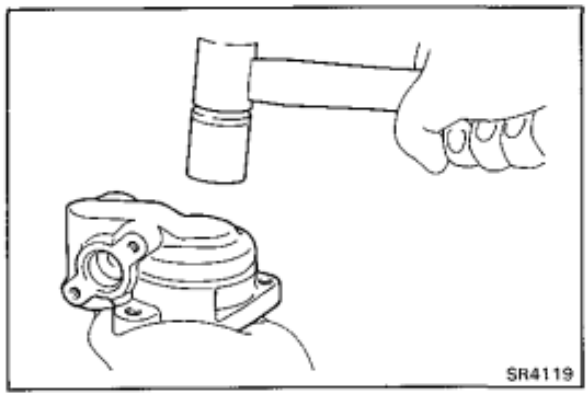

5. *REMOVE CAM RING, PRESSURE PLATE AND SPRING*

(a) Using a plastic hammer, tap the bottom end of the rear housing, and remove the pressure plate and spring.

NOTICE: Be careful not to scratch the front side of the pressure plate.

(b) Remove the O-ring from the pressure plate.

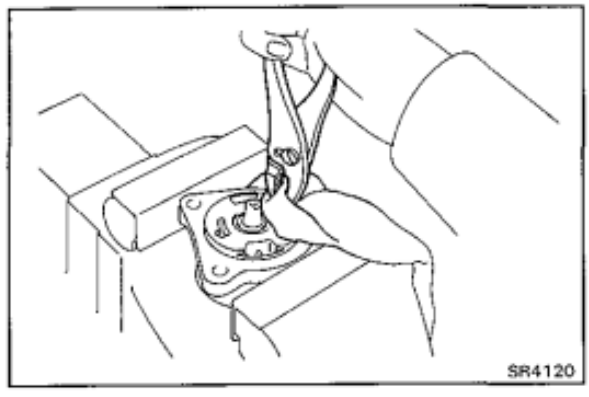

6. REMOVE STRAIGHT PIN

Using pliers, remove the straight pin.

HINT: Place a workshop rag over the pin to prevent damaging it.

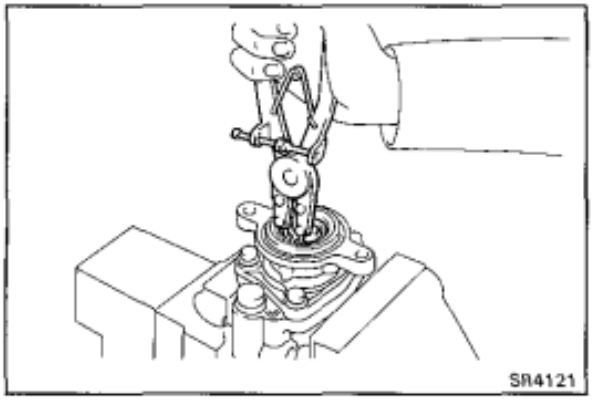

7. REMOVE ROTOR SHAFT

(a) Using snap ring pliers, remove the snap ring.

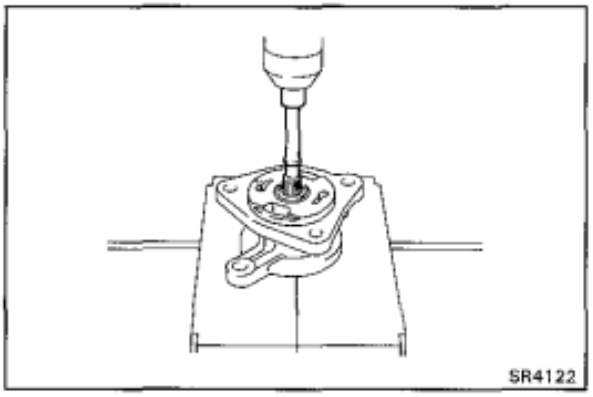

(b) Using a extension bar and press, press out the rotor shaft with bearing.

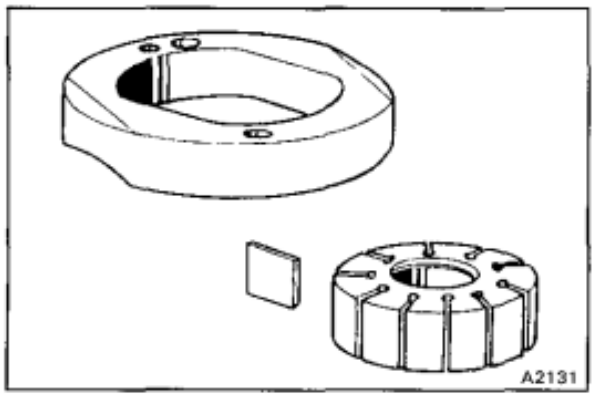

INSPECTION OF POWER STEERING PUMP

1. INSPECT ROTOR, CAM RING AND VANE PLATES

Check the cam ring for wear or scratches. If necessary, replace the cam ring with the rotor and the vane plates.

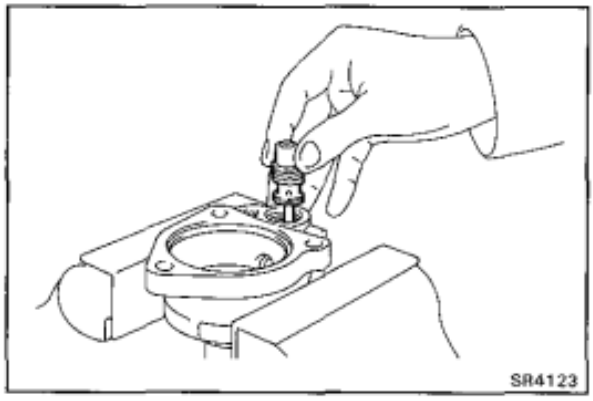

2. INSPECT FLOW CONTROL VALVE

(a) Check the flow control valve for wear or damage.

(b) Apply fluid to the valve and check that it falls smoothly into the valve hole by its own weight.

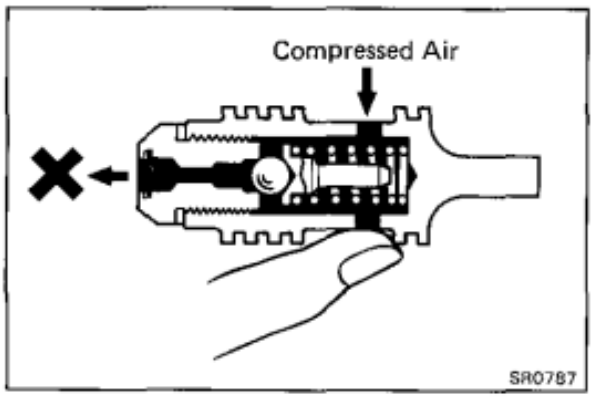

(c) Check the flow control valve for leakage. Close one of the holes and apply compressed air [4 or 5 kg/cm^2 (57 or 71 psi, 392 or 490 kPa)] into the opposite side, and confirm that air does not come out from the end hole.

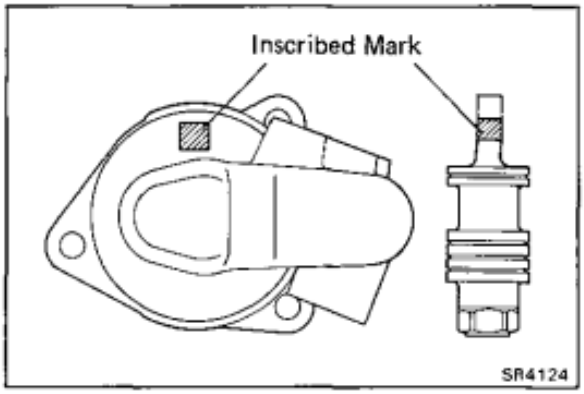

(d) If necessary, replace the valve with one having the letter as inscribed on the rear housing.

Pump housing number	Valve cutter mark
0	II
1	I
2	None

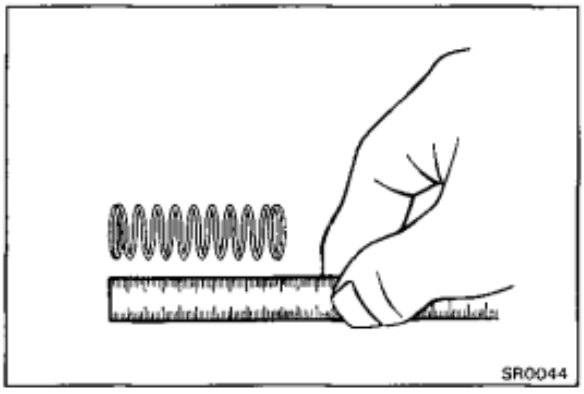

3. INSPECT FLOW CONTROL VALVE SPRING

Check that the spring length is within specification.

Spring length: 50 — 55 mm (1.97 — 2.17 in.)

If the spring is not within specification, replace it.

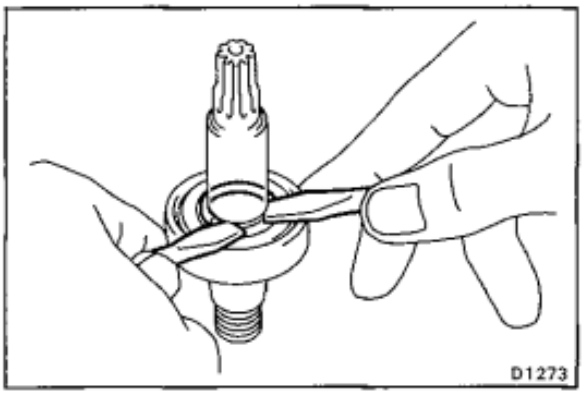

4. IF NECESSARY, REPLACE ROTOR SHAFT BEARING

(a) Using two screwdrivers, remove the snap ring.

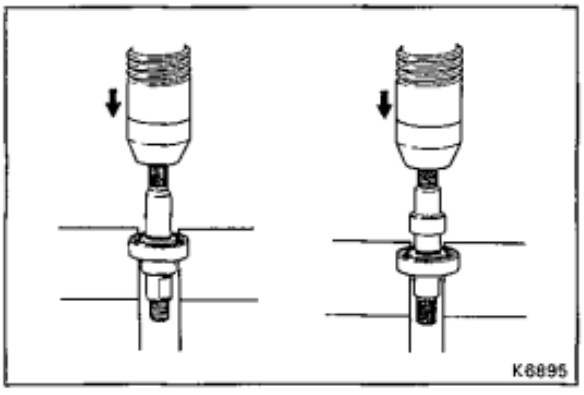

(b) Using a press, press out the bearing.

(c) Using a press, press in a new bearing.

NOTICE: Be careful not to scratch the rotor shaft contact surface with oil seal and bearing.

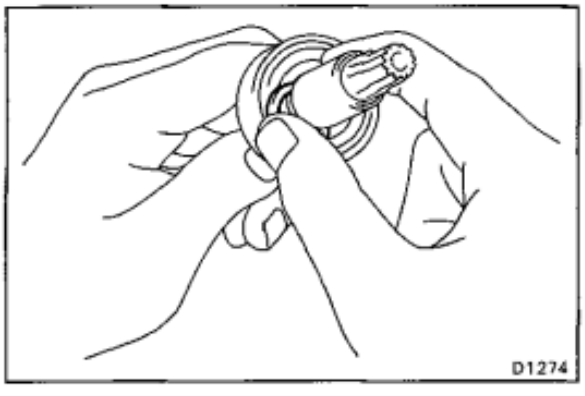

(d) Install the snap ring.

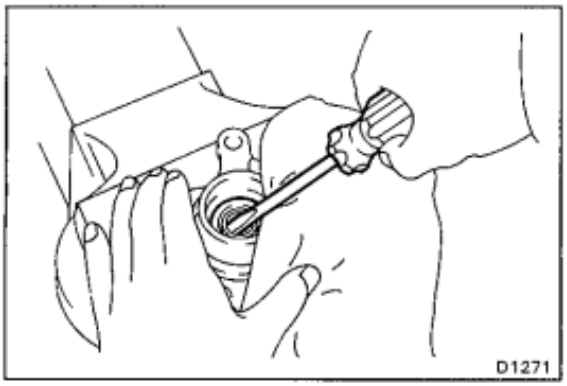

5. **IF NECESSARY, REPLACE OIL SEAL**

(a) Clamp the front housing in a vise.

NOTICE: Do not tighten the vise too tight.

(b) Using a screwdriver, remove the oil seal.

NOTICE: Be careful not to scratch the housing with a screwdriver.

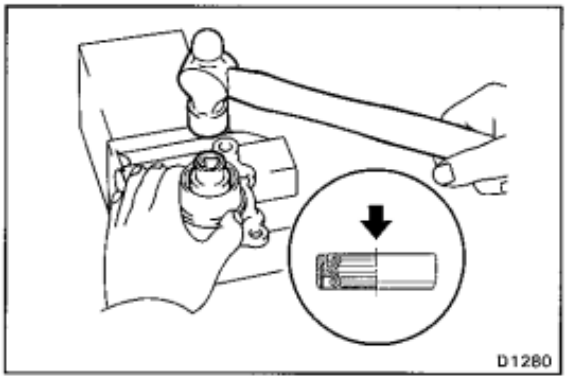

(c) Apply MP grease to the oil seal lip.

(d) Using 23 mm socket wrench, install a new oil seal.

NOTICE: Be careful not to scratch the frictional surface of the rotor.

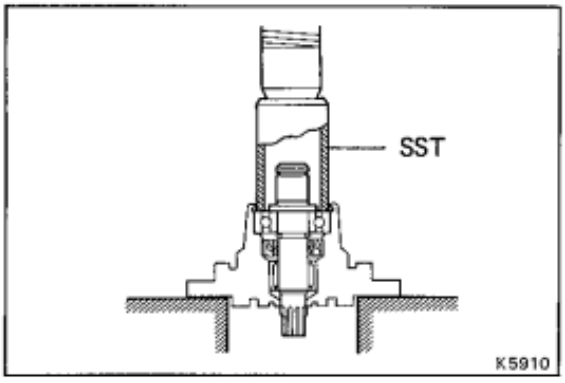

ASSEMBLY OF POWER STEERING PUMP

(See page SR-47)

1. COAT POWER STEERING FLUID ON EACH PARTS

2. INSTALL ROTOR SHAFT

(a) Using SST and a press, press in the rotor shaft to the front housing.

SST 09632-36010

NOTICE: Be careful not to scratch the oil seal lip and the rotor frictional surface.

(b) Using snap ring pliers, install the snap ring.

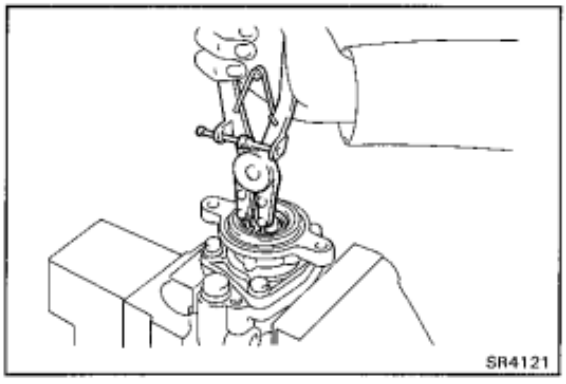

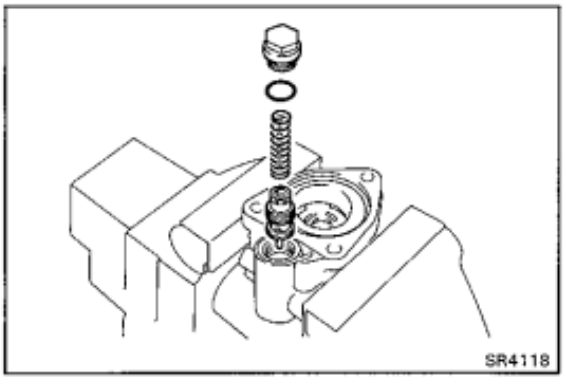

3. INSTALL FLOW CONTROL VALVE, SPRING AND VALVE LOCK CONTROL VALVE

(a) Coat power steering fluid to new O-ring.

(b) Install the O-ring to the valve lock screw.

(c) Install the flow control valve and the spring.

(d) Install the valve lock screw.

Torque: 650 kg-cm (47 ft-lb, 64 N·m)

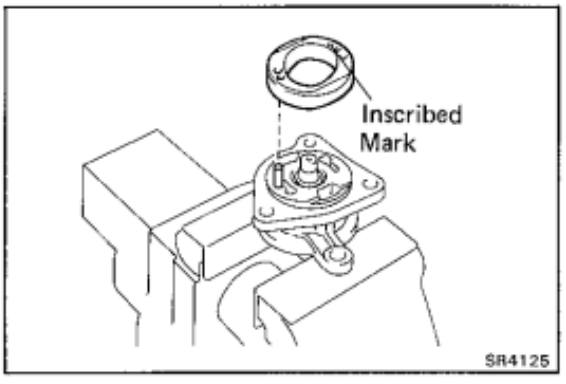

4. INSTALL CAM RING

(a) Install the straight pin to the front housing.

(b) Install the cam ring with the inscribed mark facing upper side.

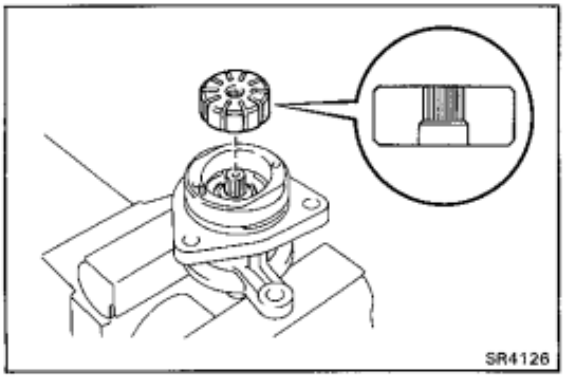

5. INSTALL ROTOR

Install the rotor as shown.

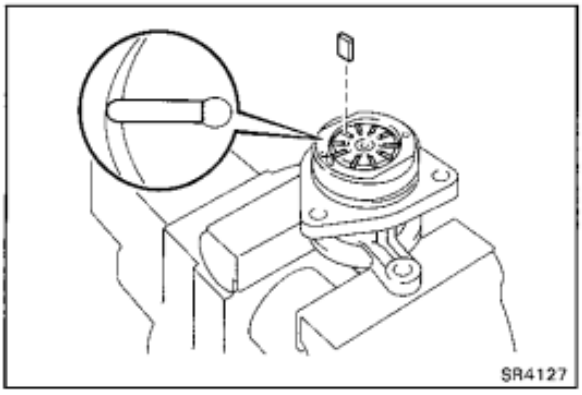
SR4127

6. INSTALL VANE PLATES

Install the vane plates with the round end facing outward.

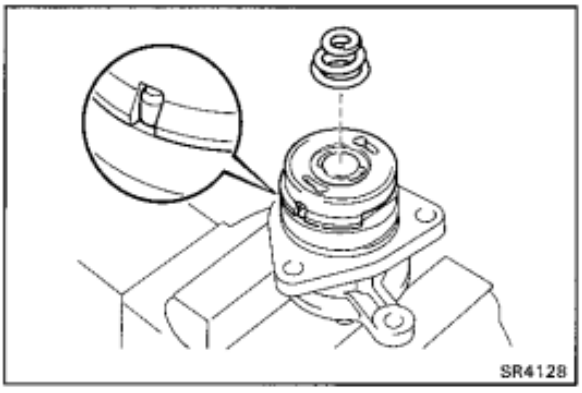
SR4128

7. INSTALL PRESSURE PLATE AND SPRING

(a) Align the cut portion of the pressure plate to the straight pin and install it.

(b) Place the spring on the pressure plate.

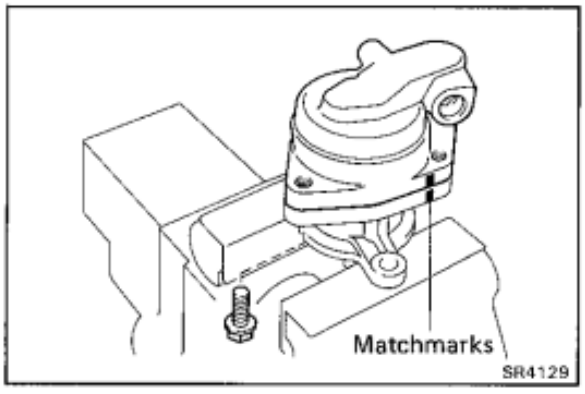

SR4129

8. INSTALL REAR HOUSING

(a) Coat a new O-ring with power steering fluid.

(b) Install the O-ring to the rear housing.

(c) Align the matchmarks on the front and rear housing and assemble them.

(d) Torque the three bolts.

Torque: 375 kg-cm (27 ft-lb, 37 N·m)

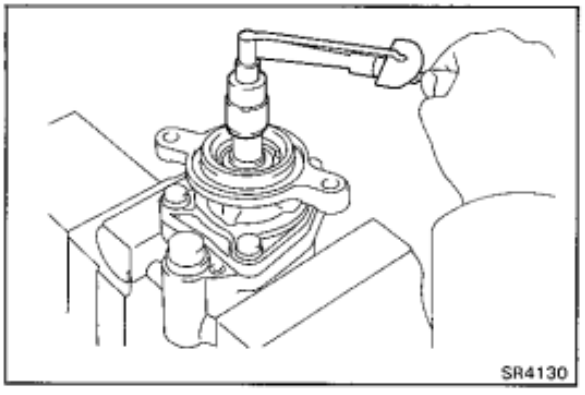
SR4130

9. CHECK ROTOR SHAFT ROTATION CONDITION

(a) Check that the rotor shaft rotates smoothly without abnormal noise.

(b) Temporarily install the gear lock nut and check the rotation torque.

Rotation torque: 2.8 kg-cm (2.4 in.-lb, 0.3 N·m) or less

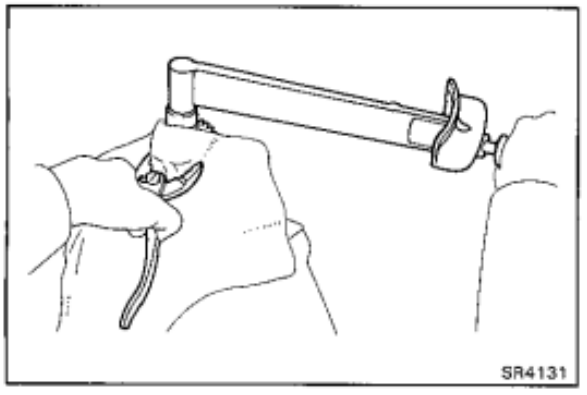
SR4131

10. INSTALL DRIVE GEAR

(a) Install the gear and woodruff key.

(b) While holding the gear with pliers, install the lock nut.

HINT: Place the workshop rag over the gear to prevent damaging it.

Torque: 700 kg-cm (51 ft-lb, 69 N·m)

COMPONENTS (LJ and RJ series)

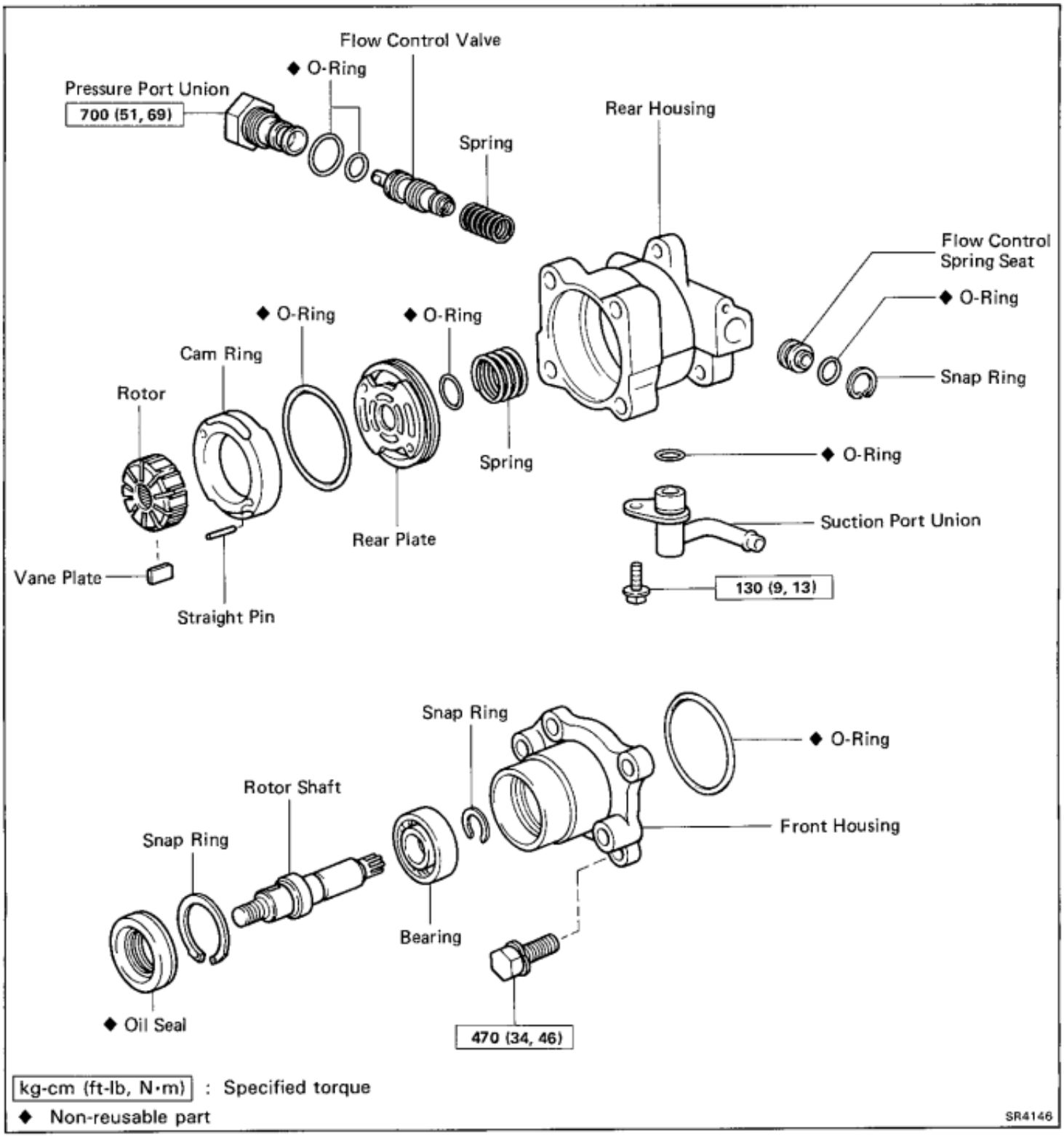

kg-cm (ft-lb, N·m) : Specified torque

◆ Non-reusable part

SR4146

DISASSEMBLY OF POWER STEERING PUMP

1. **CLAMP PS PUMP IN VISE**

   NOTICE: Do not tighten the vise too tight.

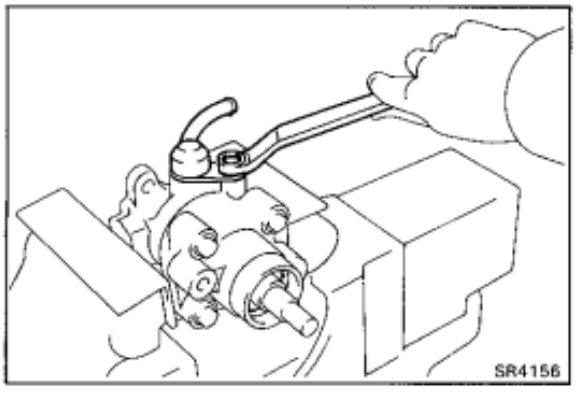

2. REMOVE SUCTION PORT UNION

(a) Remove the bolt and union.

(b) Remove the O-ring from the union.

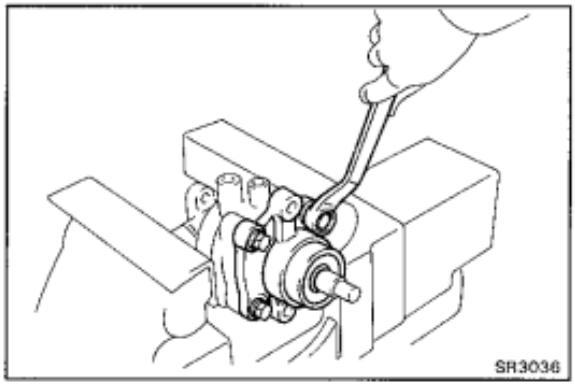

3. REMOVE FOUR FRONT HOUSING BOLTS

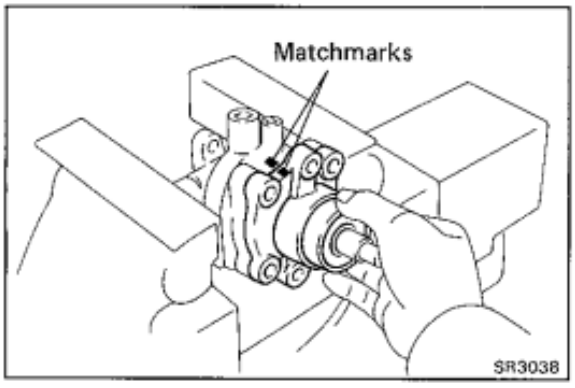

4. REMOVE FRONT HOUSING

(a) Place matchmarks on the front and rear housing.

(b) Using a plastic hammer, tap off the front housing.

NOTICE: Be careful that the vane plates, rotor and cam ring do not fall out.

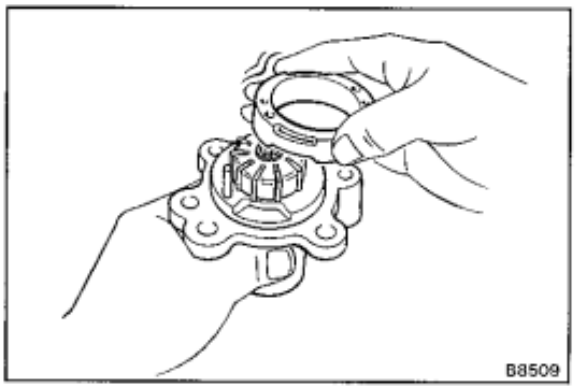

5. REMOVE CAM RING, ROTOR AND VANE PLATES

NOTICE: Be careful not to scratch the cam ring, rotor or vane plates.

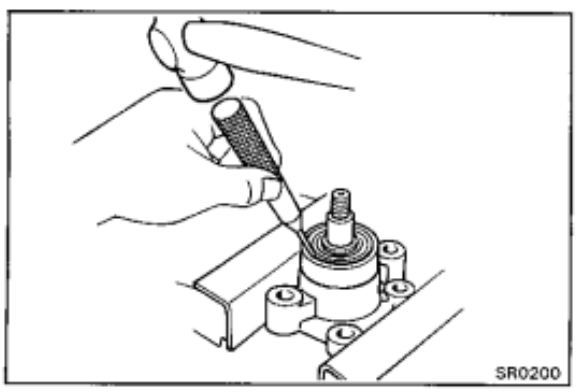

6. REMOVE ROTOR SHAFT

(a) Clamp the front housing in a vise.

NOTICE: Do not tighten the vise too tight.

(b) Using a chisel and hammer, pry off the oil seal.

(c) Using snap ring pliers, remove the snap ring.

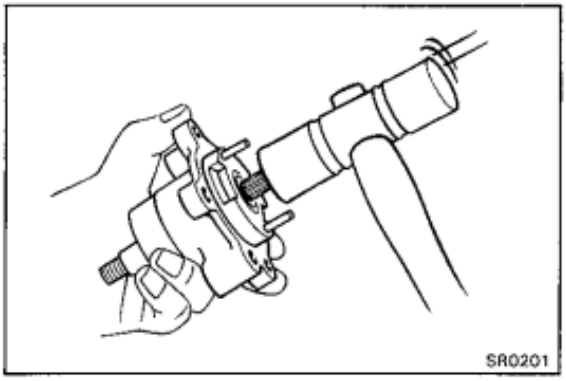

(d) Using a plastic hammer, lightly tap the rotor shaft out of the front housing.

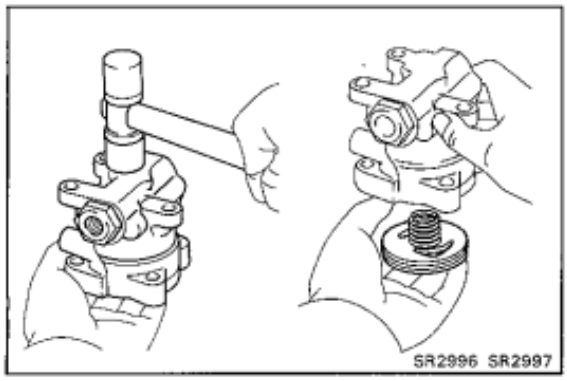

7. REMOVE REAR PLATE AND SPRING

Using a plastic hammer, tap the bottom end of the rear housing, and remove the rear plate and spring.

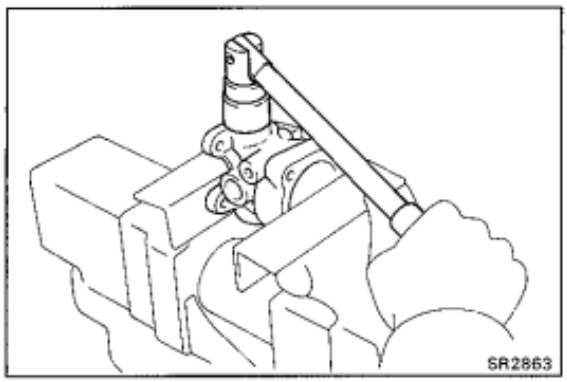

8. REMOVE PRESSURE PORT UNION

(a) Remove the pressure port union.

(b) Remove the O-rings from the union and housing.

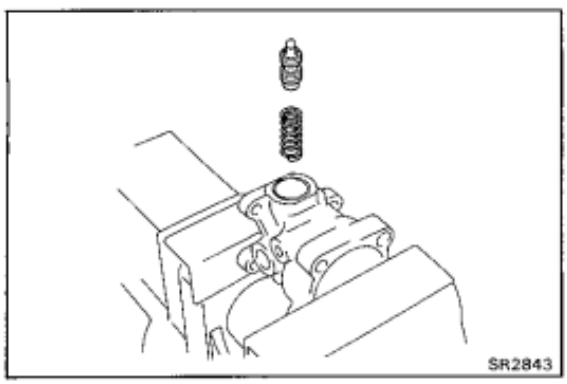

(c) Remove the flow control valve and spring.

NOTICE: Use care not to drop, scratch or nick this valve.

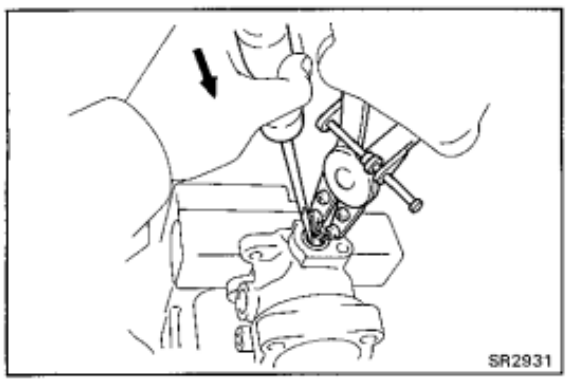

9. REMOVE FLOW CONTROL SPRING SEAT

(a) Temporarily install a bolt to the spring seat.

(b) Push the bolt and remove the snap ring with snap ring pliers.

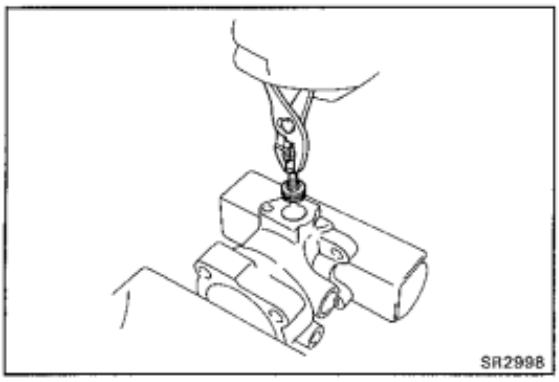

(c) Pull out the bolt and remove the spring seat.

(d) Remove the O-ring from the spring seat.

INSPECTION OF POWER STEERING PUMP

1. INSPECT BUSHING AND MEASURE BUSHING OIL CLEARANCE

(a) Check the bushing for wear or damage. The bushing cannot be replaced separately.

If wear or damage is found, replace entire housing.

(b) Check the oil clearance between the bushing and rotor shaft.

Maximum oil clearance: 0.07 mm (0.0028 in.)

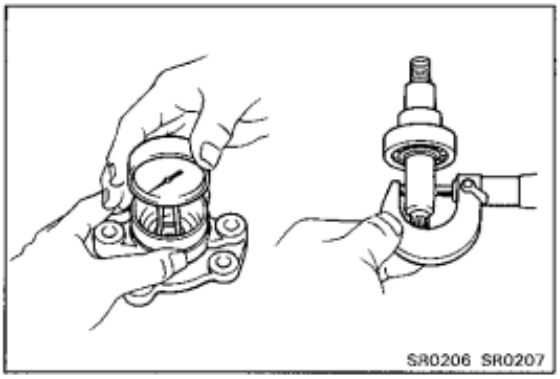

2. IF NECESSARY, REPLACE ROTOR SHAFT BEARING

(a) Using snap ring pliers, remove the snap ring.

(b) Using a press, press out the bearing.

(c) Using a press, press in a new bearing.

(d) Using snap ring pliers, install the snap ring.

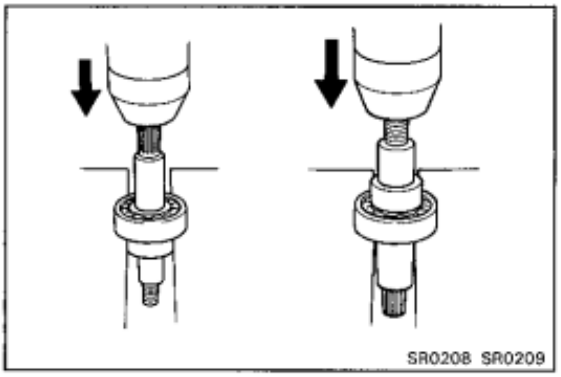

3. INSPECT ROTOR AND CAM RING

Measure the cam ring thickness. Check that the difference between the rotor and cam ring measurement is less than maximum.

Maximum difference: 0.06 mm (0.0024 in.)

If the difference is excessive, replace the cam ring with one having the same letter as on the rotor.

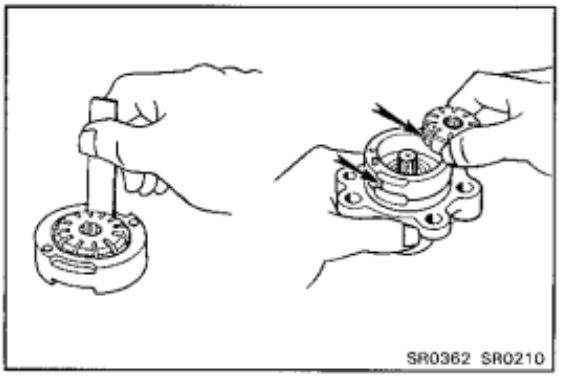

4. INSPECT AND MEASURE VANE PLATES

(a) Check the vane plates for wear or scratches.

(b) Measure the length, height and thickness of the vane plates.

Minimum length: 14.97 mm (0.5894 in.)

Minimum height: 7.8 mm (0.307 in.)

Minimum thickness: 1.7 mm (0.067 in.)

(c) Measure the clearance between the vane plate and rotor groove.

Maximum clearance: 0.06 mm (0.0024 in.)

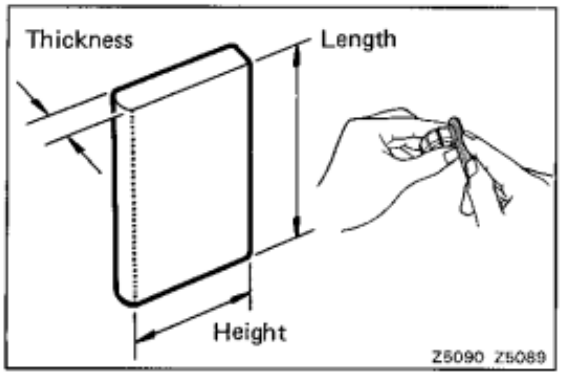

HINT: There are five vane lengths with the following rotor and cam ring numbers:

Rotor and cam ring number	Vane length mm (in.)
None	14.996 — 14.998 (0.5904 — 0.5905)
1	14.994 — 14.996 (0.5903 — 0.5904)
2	14.992 — 14.994 (0.5902 — 0.5903)
3	14.990 — 14.992 (0.59016 — 0.59024)
4	14.988 — 14.990 (0.5901 — 0.5902)

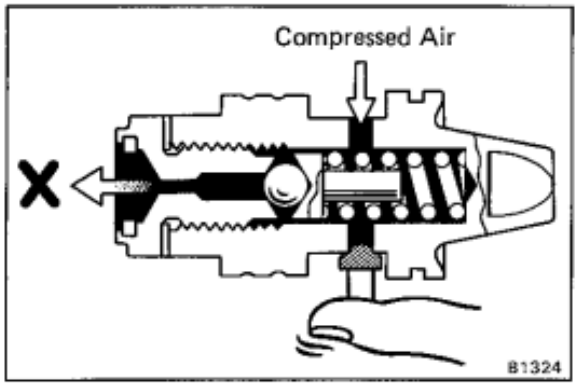

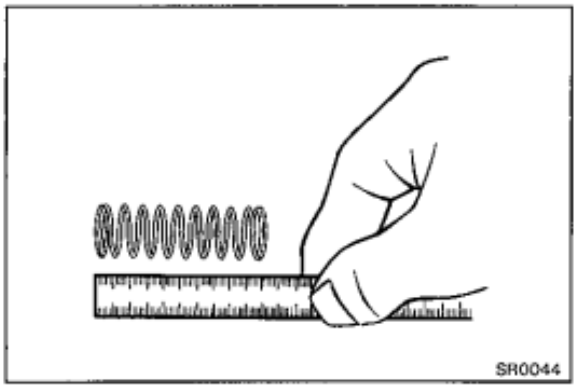

5. INSPECT FLOW CONTROL VALVE

(a) Check the flow control valve for wear or damage.

(b) Apply fluid to the valve and check that if falls smoothly into the valve hole by its own weight.

(c) Check the flow control valve for leakage. Close one of the holes and apply compressed air [4 or 5 kg/cm^2 (57 or 71 psi, 392 or 490 kPa)] into the opposite side, and confirm that air does not come out from the end hole.

If necessary, replace the valve with one having the same letter as inscribed on the rear housing.

6. INSPECT FLOW CONTROL VALVE SPRING

Check that the spring is within specification.

Spring length: 47 — 50 mm (1.85 — 1.97 in.)

If the spring is not within specification, replace it.

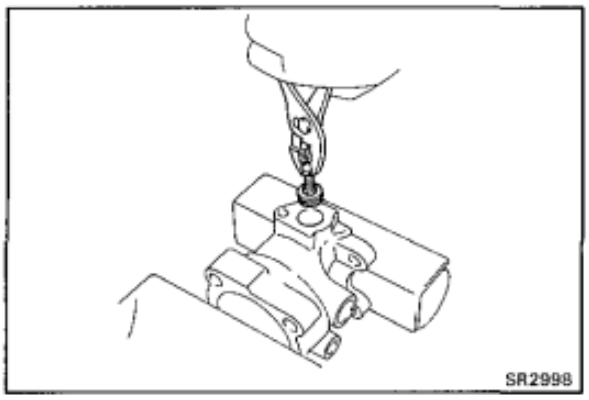

ASSEMBLY OF POWER STEERING PUMP

(See page SR-54)

1. INSTALL FLOW CONTROL SPRING SEAT

(a) Install a new O-ring to the spring seat.

(b) Insert the spring seat to the housing.

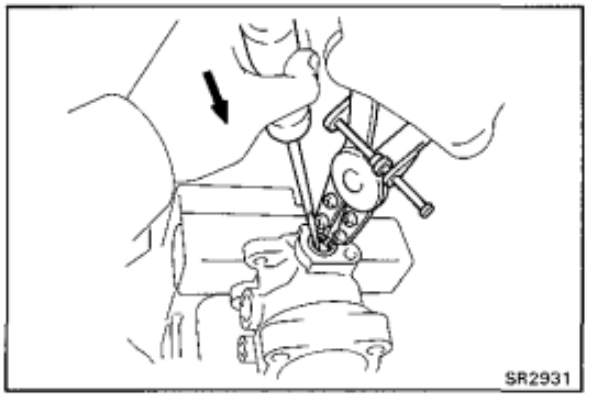

(c) Using snap ring pliers, install the snap ring.

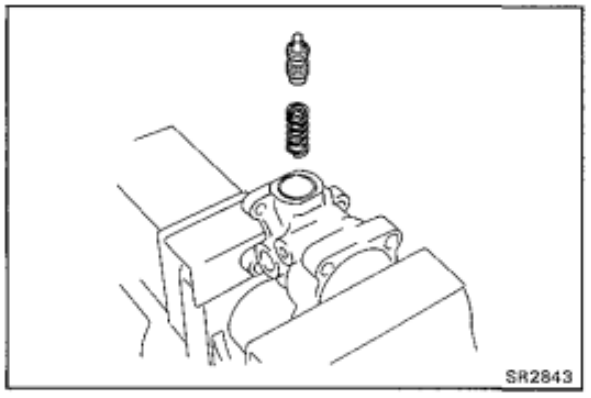

2. INSTALL FLOW CONTROL VALVE AND SPRING

(a) Install new O-ring to the housing.

(b) Insert the spring and valve to the housing.

HINT: Be sure the letter inscribed on the flow control valve matches the letter stamped on the rear of the pump body.

Inscribed mark: A, B, C, D, E or F

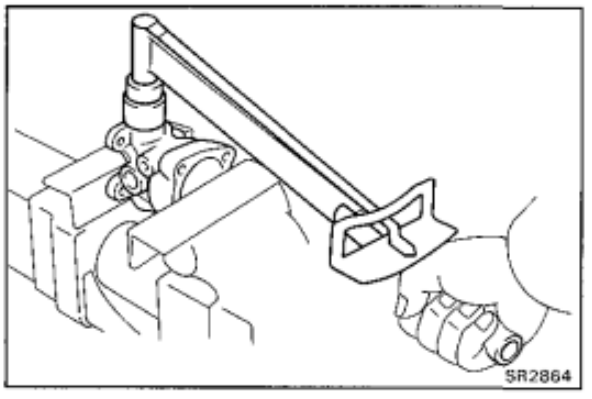

3. INSTALL PRESSURE PORT UNION

(a) Install a new O-ring to the pressure port union.

(b) Install and torque the union.

Torque: 700 kg-cm (51 ft-lb, 69 N·m)

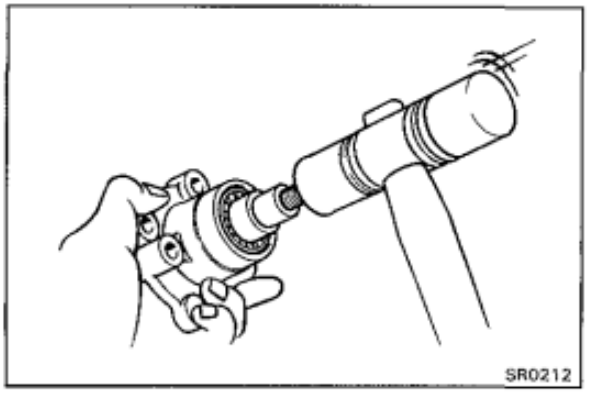

4. INSTALL ROTOR SHAFT TO FRONT HOUSING

Install the rotor shaft into the front housing by tapping it in with a plastic hammer.

5. INSTALL SNAP RING

Using snap ring pliers, install the snap ring to the front housing.

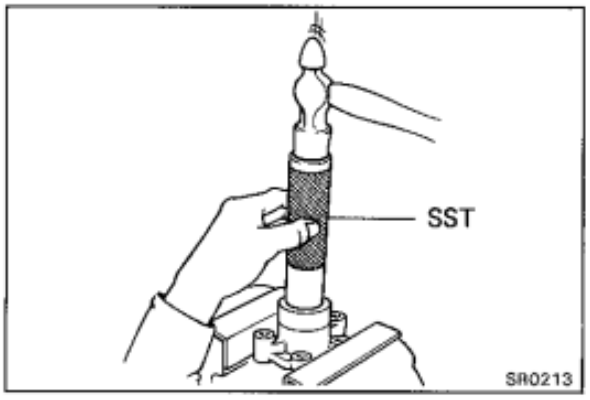

6. INSTALL OIL SEAL

(a) Apply a light coat of MP grease to the oil seal lip.

(b) Using SST and hammer, install the oil seal.

SST 09608-30012 (09608-04030)

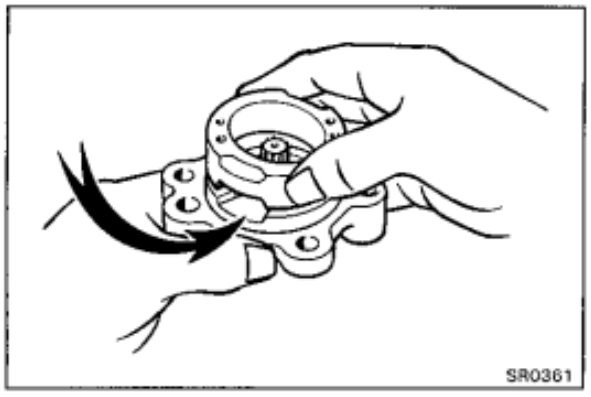

7. INSTALL NEW O-RING

8. INSTALL CAM RING

Align the fluid passages of the cam ring and front housing, and install the cam ring.

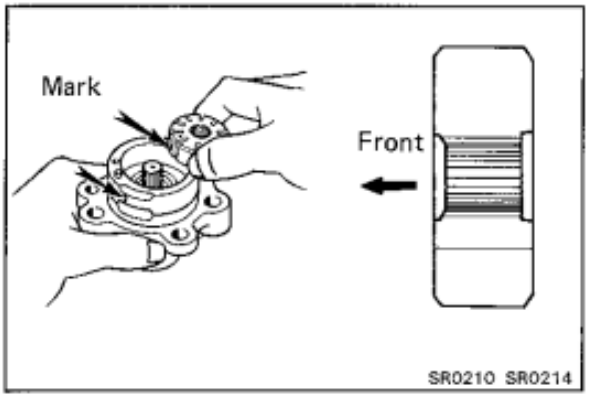

9. INSTALL ROTOR

Install the rotor with the chamfered end facing toward the front.

HINT: Be sure the letters inscribed on the cam ring and rotor match.

Inscribed mark: 1, 2, 3, 4, or None

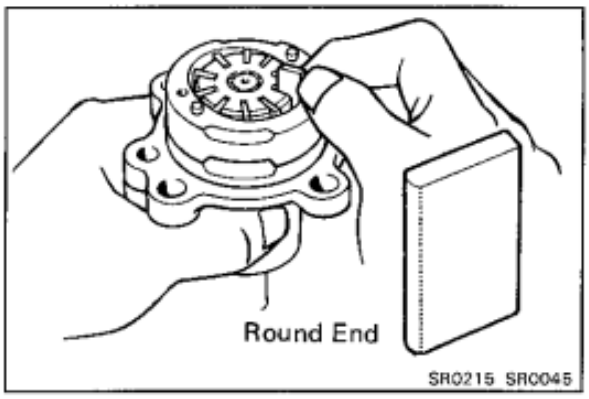

10. INSTALL VANE PLATES

Install the vane plates with the round end facing outward.

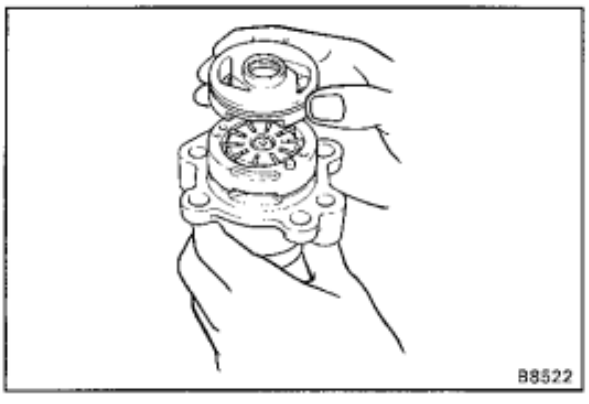

11. INSTALL REAR PLATE AND SPRING

(a) Align the fluid passages of the rear plate and cam ring, and install the rear plate.

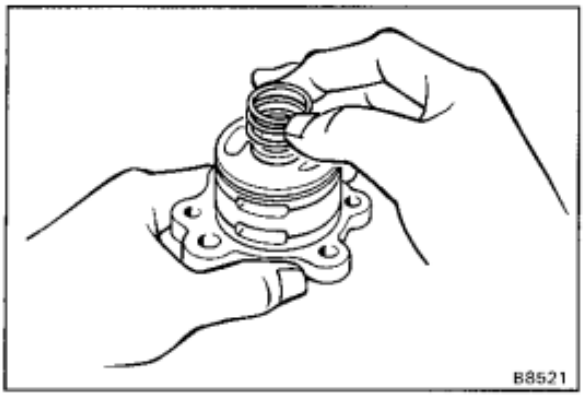

(b) Place the spring on the rear plate.

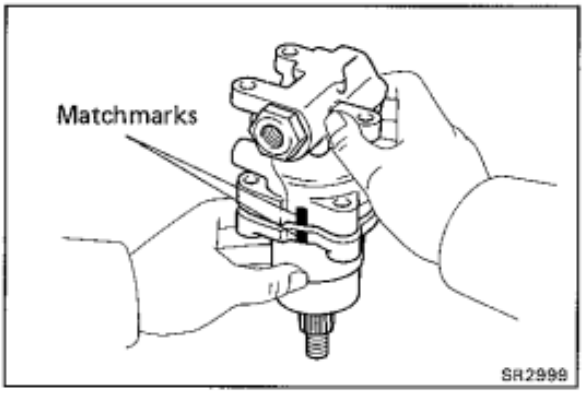

12. INSTALL REAR HOUSING

(a) Align the matchmarks on the front and rear housing and assemble them.

(b) Tighten the front and rear housing mount bolts by hand.

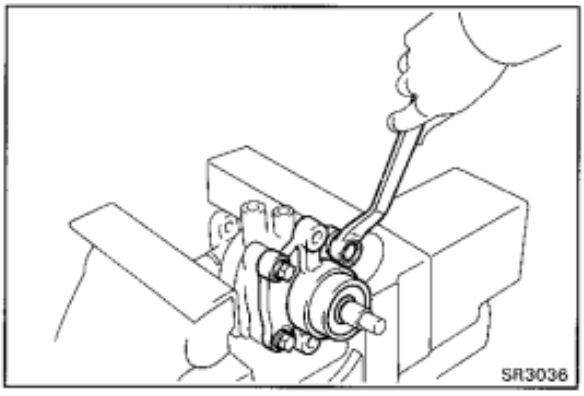

13. TIGHTEN FOUR HOUSING BOLTS

(a) Clamp the rear housing in a vise.

NOTICE: Do not tighten the vise too tight.

(b) Tighten the four housing bolts evenly in 3 or 4 passes.

Torque: 470 kg-cm (34 ft-lb, 46 N·m)

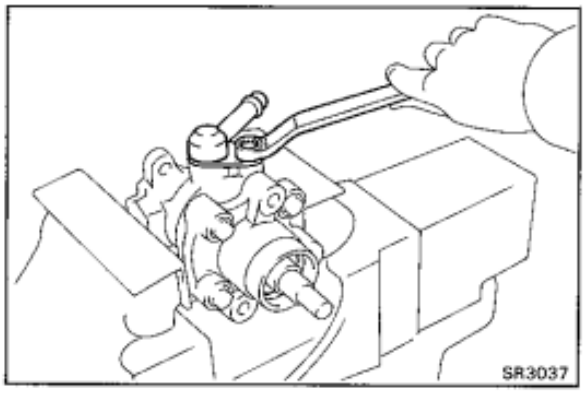

14. INSTALL SUCTION PORT UNION

Insert and tighten the union.

Torque: 130 kg-cm (9 ft-lb, 13 N·m)

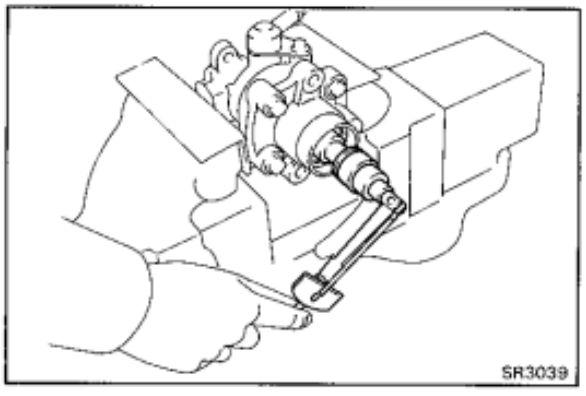

15. CHECK ROTOR SHAFT ROTATION CONDITION

(a) Check that the rotor shaft rotates smoothly without abnormal noise.

(b) Provisionally install the pulley nut and check the rotation torque.

Rotation torque: 2.8 kg-cm (2.4 in.-lb, 0.3 N·m) or less

Gear Housing

REMOVAL AND INSTALLATION OF GEAR HOUSING

Remove and install the parts as shown.

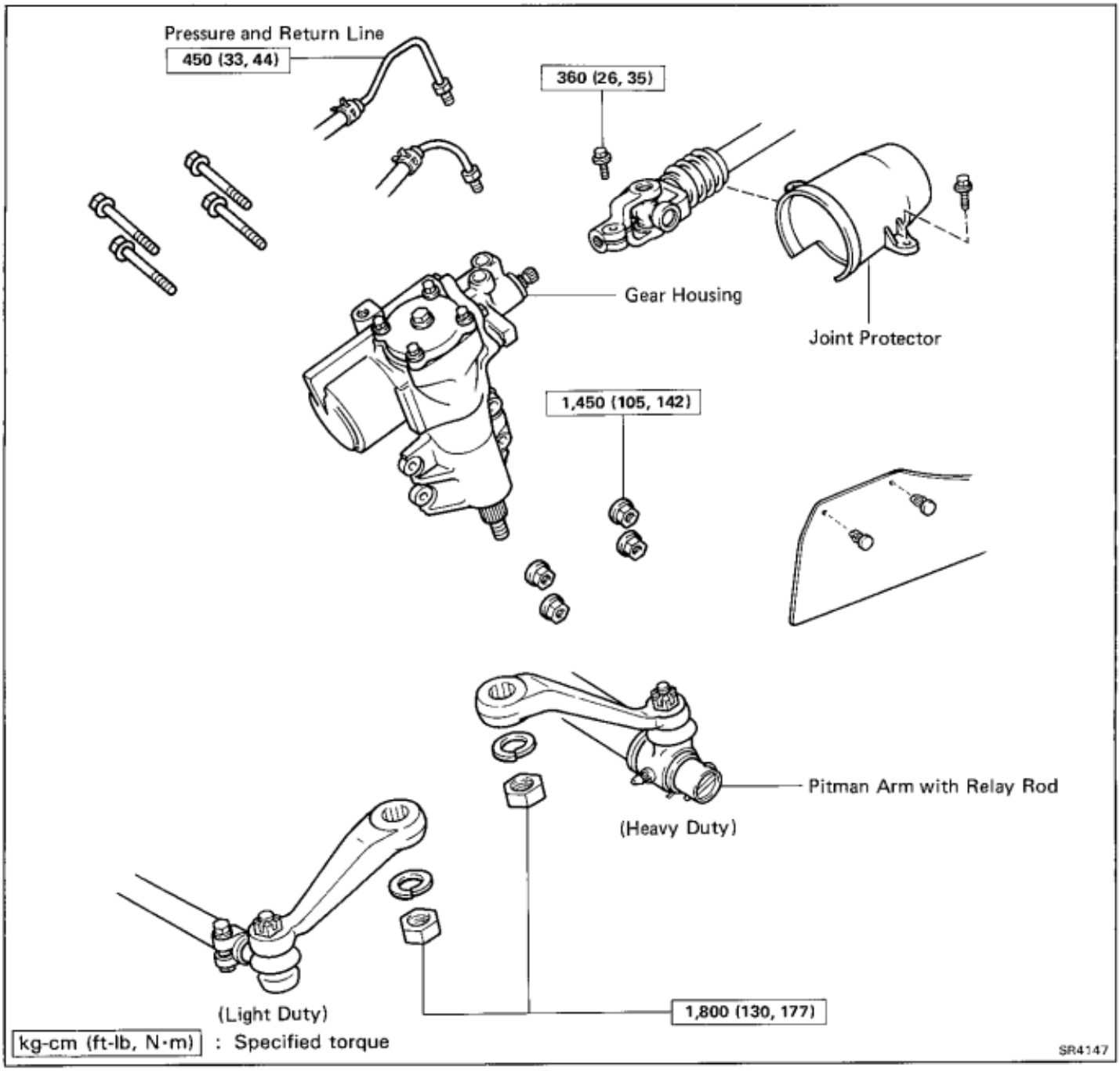

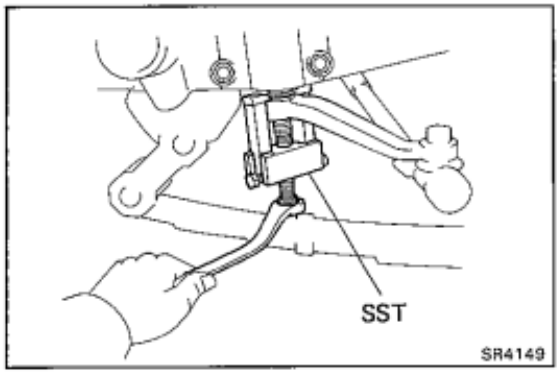

(MAIN POINTS OF REMOVAL AND INSTALLATION)

1. DISCONNECT PITMAN ARM

(a) Loosen the pitman arm nut.

(b) Using SST, disconnect the pitman arm from the sector shaft.

SST 09628-62011

(c) Remove the nut, the spring washer and the arm.

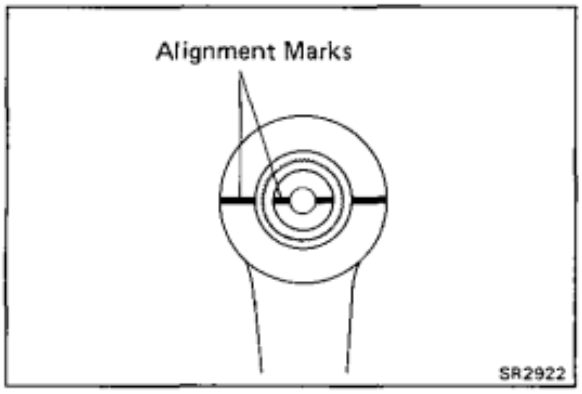

(d) When connecting the pitman arm, align alignment marks on the pitman arm and the sector shaft, and install the spring washer and nut.

Torque: 1,800 kg-cm (130 ft-lb, 177 N·m)

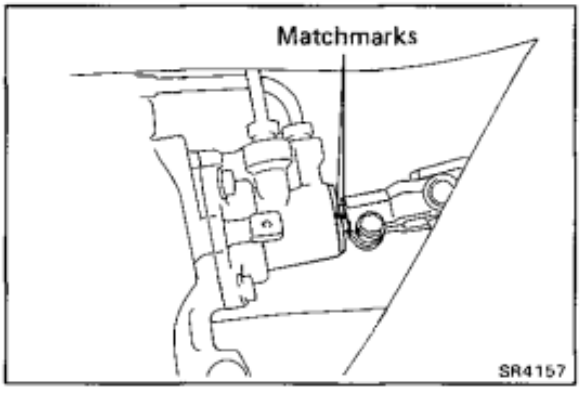

2. DISCONNECT UNIVERSAL JOINT FROM GEAR HOUSING

(a) Place matchmarks on the universal joint and the worm shaft.

(b) Loosen the universal joint upper bolt.

(c) Remove the universal joint lower bolt.

(d) Slide the joint backward to disconnect the joint from the worm shaft.

COMPONENTS

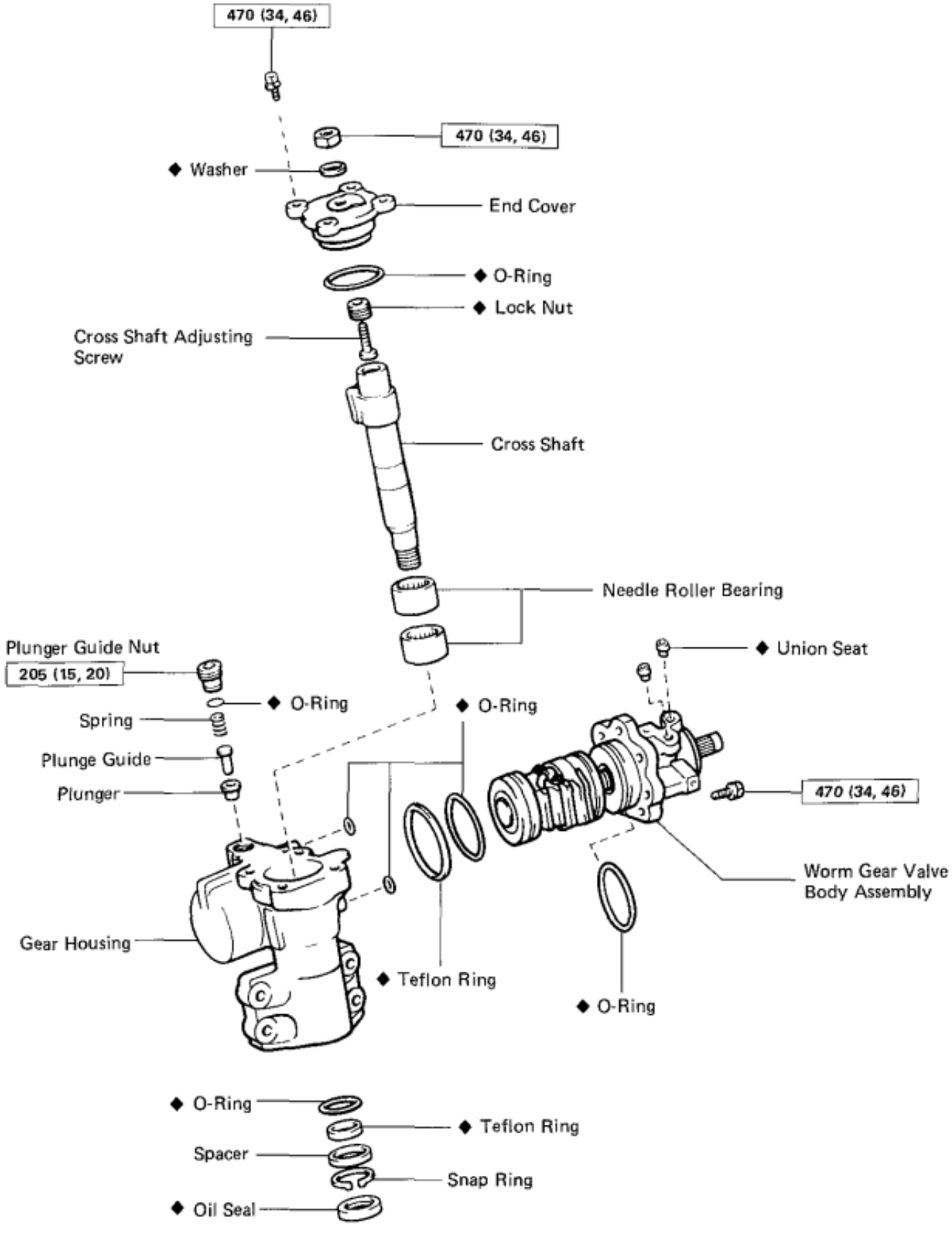

kg-cm (ft-lb, N·m) : Specified torque

◆ Non-reusable part

SR3975

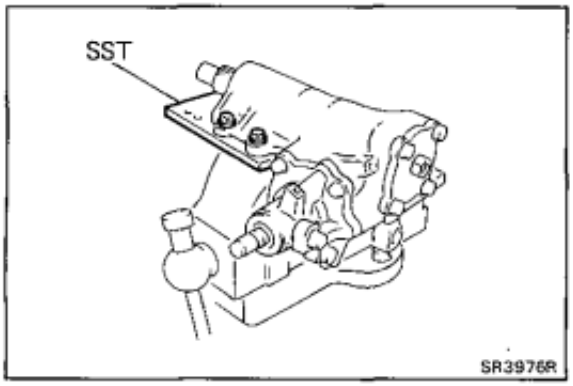

DISASSEMBLY OF GEAR HOUSING

(See page SR-64)

1. MOUNT HOUSING ON STAND

Mount the gear housing on SST and clamp SST in a vise.

SST 09630-00012 (09631-00140)

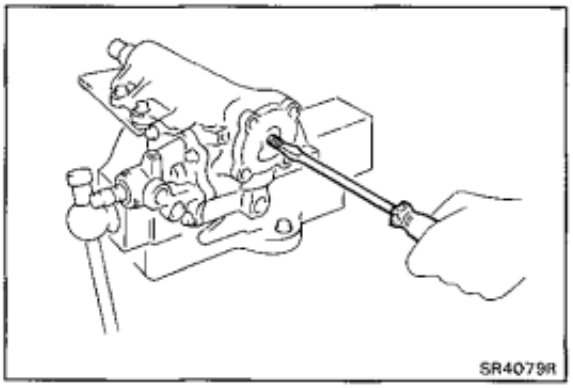

2. REMOVE END COVER

(a) Remove the adjusting screw lock nut.

(b) Remove the four bolts.

(c) Screw in the adjusting screw until the cover comes off.

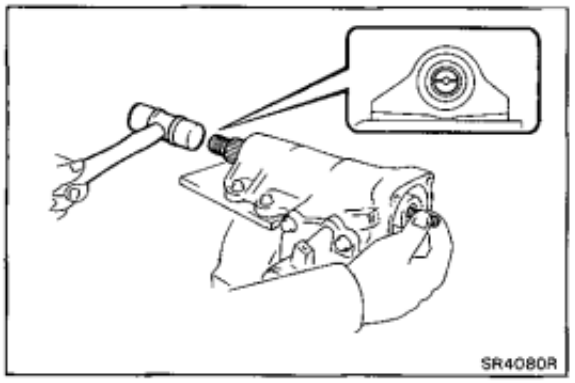

3. REMOVE CROSS SHAFT

Using a plastic hammer, tap on the cross shaft end and pull out the shaft.

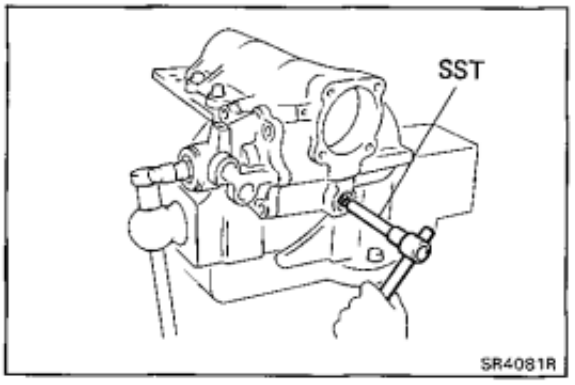

4. REMOVE PLUNGER GUIDE NUT

(a) Using SST, remove the plunger guide nut.

SST 09043-38100

(b) Remove the spring, plunger and plunger guide.

(c) Remove the O-ring.

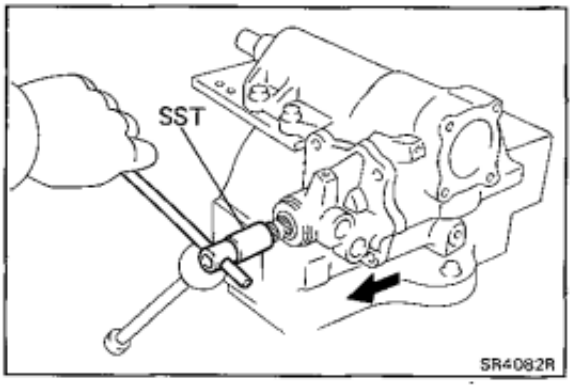

5. REMOVE WORM GEAR VALVE BODY ASSEMBLY

(a) Remove the four cap bolts from the housing.

(b) Using SST, turn the shaft clockwise to disconnect the worm gear valve body assembly from gear housing.

SST 09616-00010

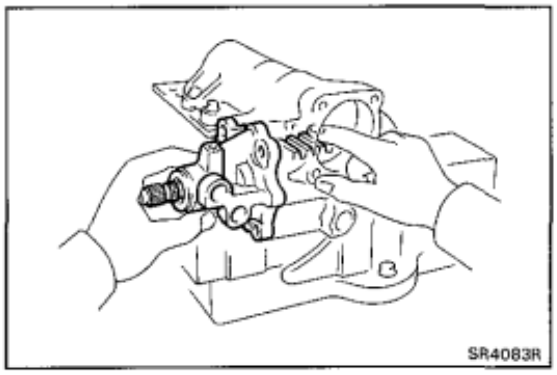

(c) Hold the power piston nut with your thumb so it cannot move, then withdraw the valve body and power piston assembly.

NOTICE: Ensure that the power piston nut does not come off the worm shaft.

(d) Remove the O-ring.

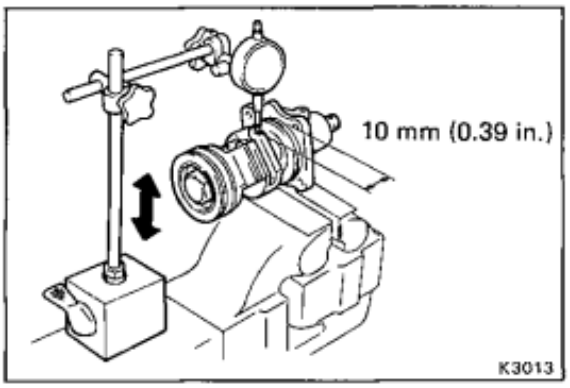

INSPECTION AND REPLACEMENT OF GEAR HOUSING

1. CHECK BALL CLEARANCE

(a) Mount the valve body in a vise.

(b) Using a dial indicator, check the ball clearance. Move the worm gear up and down.

Maximum ball clearance: 0.15 mm (0.0059 in.)

If clearance is excessive, the power control valve assembly must be replaced.

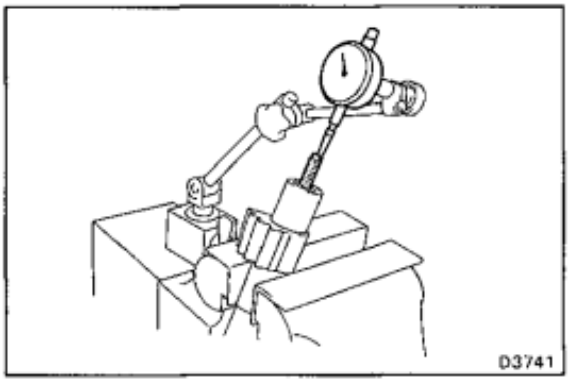

2. INSPECT CROSS SHAFT ADJUSTING SCREW THRUST CLEARANCE

(a) Clamp the cross shaft in a vise.

(b) Using a dial indicator, measure the thrust clearance.

Thrust clearance: 0.03 — 0.05 mm (0.0012 — 0.0020 in.)

If thrust clearance is not correct, adjust the thrust clearance.

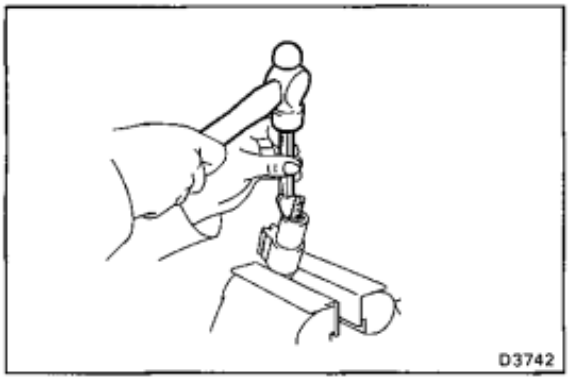

3. IF NECESSARY, ADJUST THRUST CLEARANCE

(a) Using a chisel and hammer, remove the lock nut stake.

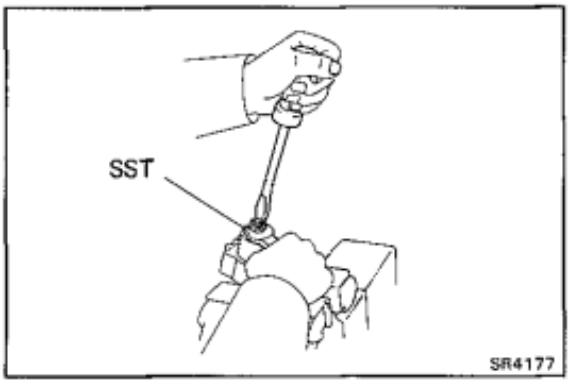

(b) Using SST, remove the lock nut.

SST 09630-00012 (09631-00050)

(c) Adjust the adjusting screw for correct thrust clearance and tighten a new lock nut.

(d) Stake the lock nut.

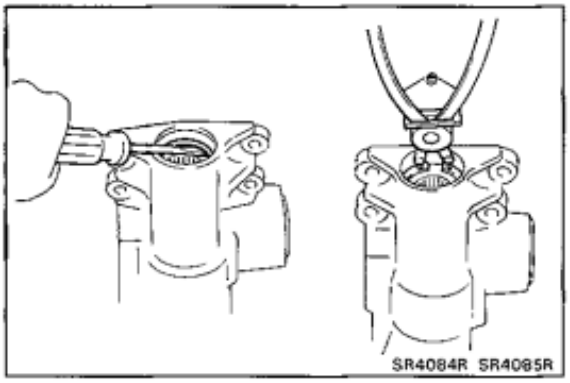

4. IF NECESSARY, REPLACE NEEDLE ROLLER BEARING

(a) Using a screwdriver, pry out the oil seal.

(b) Using snap ring pliers, remove the snap ring.

(c) Remove the metal spacer, teflon ring and O-ring.

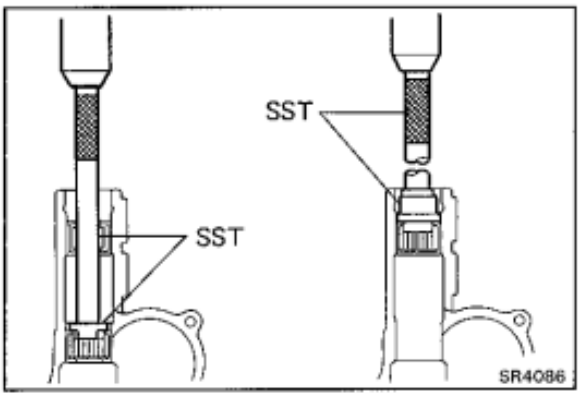

(d) Using SST, press out the upper bearing.

SST 09630-00012 (09631-00020, 09631-00070)

(e) Using SST, press out the lower bearing.

SST 09630-00012 (09631-00020, 09631-00090)

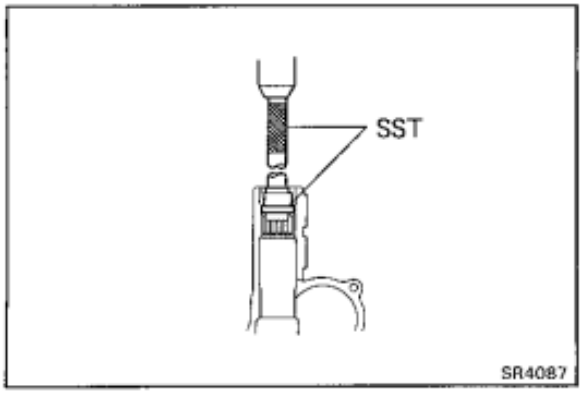

(f) Using SST, press in a new lower bearing.

SST 09630-00012 (09631-00020, 09631-00090)

HINT: Install the lower bearing so that it is positioned 23.1 mm (0.909 in.) away from the housing inner end surface.

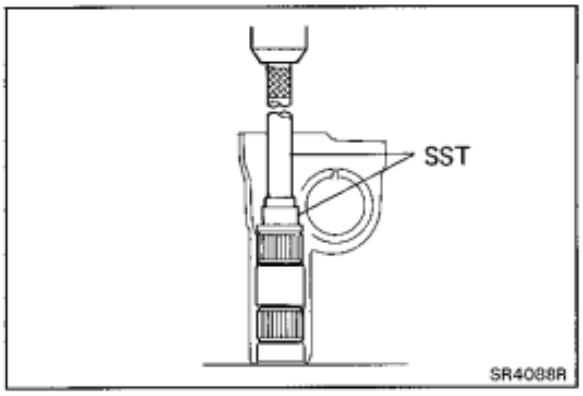

(g) Using SST, press in a new upper bearing.

SST 09630-00012 (09631-00020, 09631-00090)

HINT: The bearing's top end should be installed so that it aligns with the housing end surface.

(h) Install a new O-ring and metal spacer.

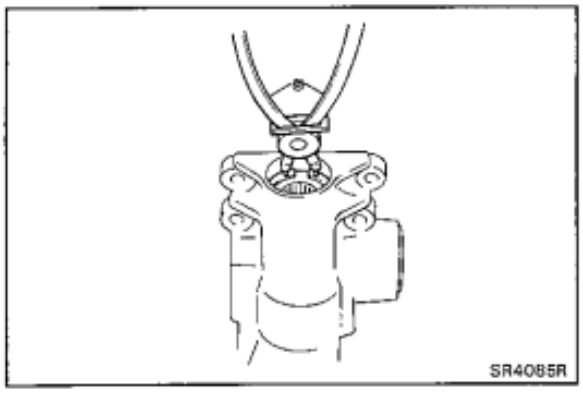

(i) Using snap ring pliers, install the snap ring.

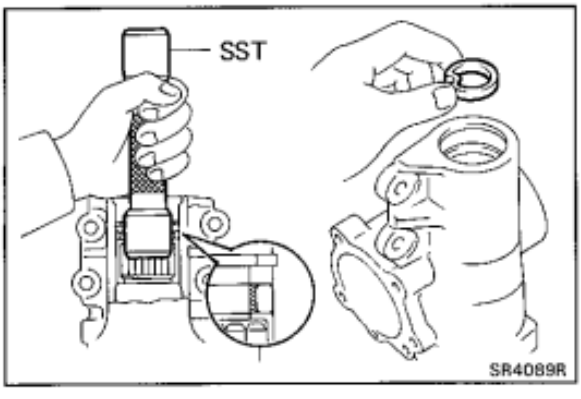

(j) Form a new teflon ring into a heart shapeand install it with hand.

(k) Using SST, form the teflon ring.

NOTICE: The teflon ring must be squeezed before inserting the sector shaft or damage will result.

SST 09630-00012 (09631-00120)

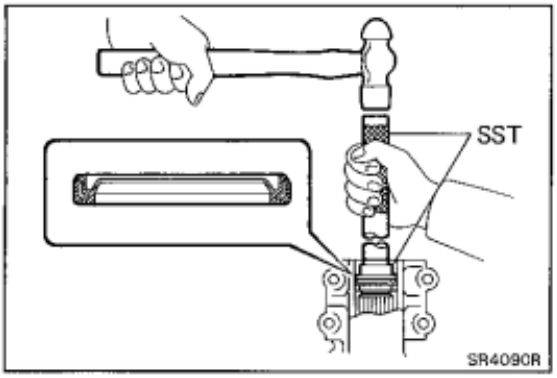

(l) Using SST, drive a new oil seal into the gear housing.

SST 09630-00012 (09631-00020, 09631-00090)

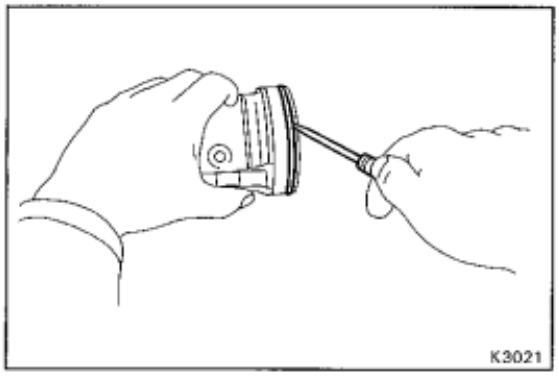

5. IF NECESSARY, REPLACE CONTROL VALVE TEFLON RING

(a) Using a screwdriver, remove the teflon ring and O-ring.

NOTICE: Be careful not to damage the control valve.

(b) Install a new O-ring.

(c) Expand a new teflon ring with your fingers.

NOTICE: Be careful not to over-expand the teflon ring.

(d) Install a new teflon ring.

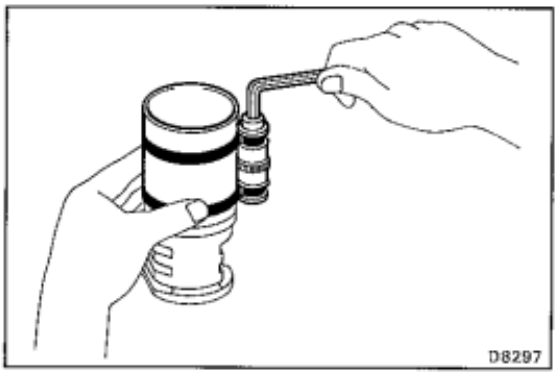

(e) Coat the teflon ring with power steering fluid and snug it down with piston ring compressor for 5 — 7 minutes.

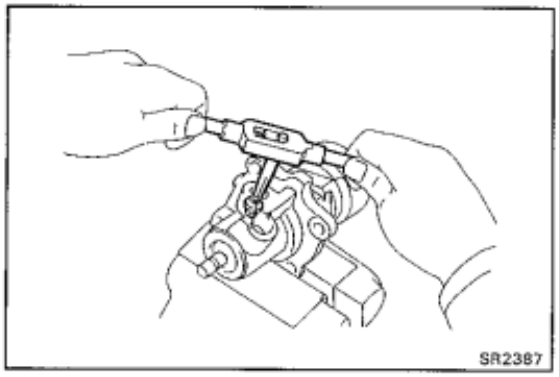

6. IF NECESSARY, REPLACE UNION SEAT

(a) Using a screw extractor, remove the union seat.

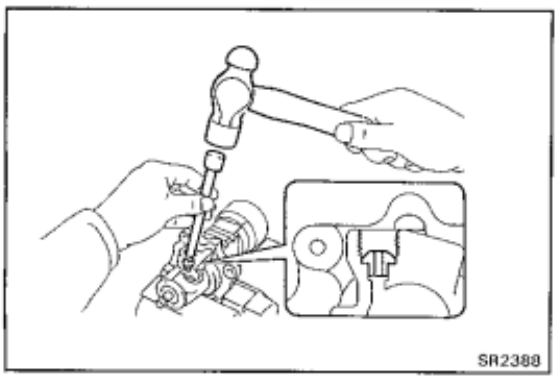

(b) Using a plastic hammer and extension bar, tap in a new union seat.

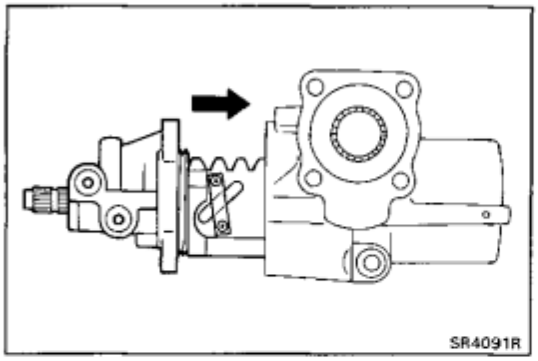

ASSEMBLY OF GEAR HOUSING

(See page SR-64)

1. INSTALL WORM GEAR VALVE BODY ASSEMBLY

(a) Install the three O-rings to the gear housing and valve body.

(b) Mount the gear housing on SST and clamp SST in vise.

SST 09630-00012 (09631-00140)

(c) Insert the worm gear valve body assembly to the gear housing as shown.

(d) Install and torque the four bolts.

Torque: 470 kg-cm (34 ft-lb, 46 N·m)

NOTICE: Be careful not to damage the teflon ring.

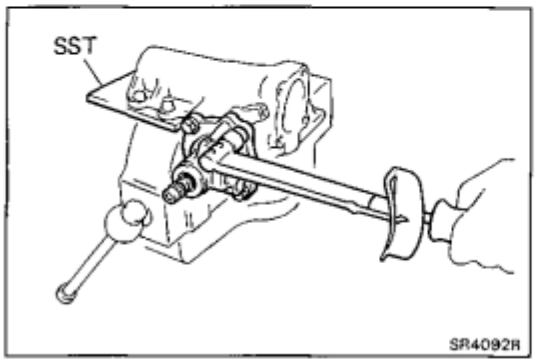

(e) Using SST, check the worm gear preload.

SST 09616-00010

Preload: (at starting)
3 — 5.5 kg-cm (2.6 — 4.8 in.-lb, 0.3 — 0.5 N·m)

HINT: Hold the power piston nut to prevent it from turning.

If preload is not correct, replace the worm gear assembly.

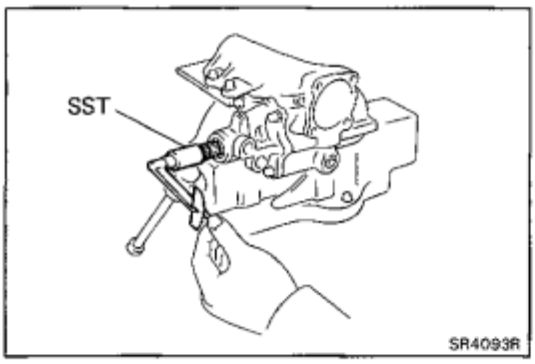

2. INSTALL PLUNGER GUIDE NUT

(a) Install the plunger, plunger guide and spring.

(b) Install a new O-ring to the plunger guide nut and install the plunger guide nut with SST.

SST 09043-38100

Torque: 205 kg-cm (15 ft-lb, 20 N·m)

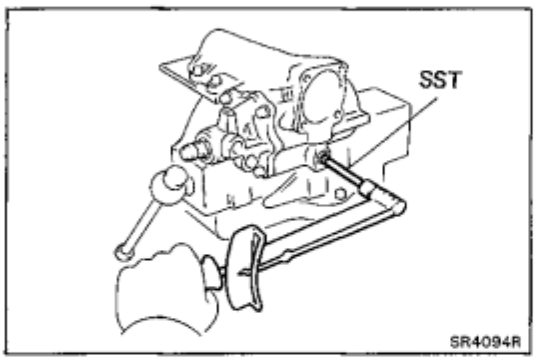

3. INSTALL CROSS SHAFT AND END COVER

(a) Install a new O-ring on the end cover.

(b) Using a screwdriver, assemble the cross shaft to the end cover.

HINT: Fully loosen the adjusting screw.

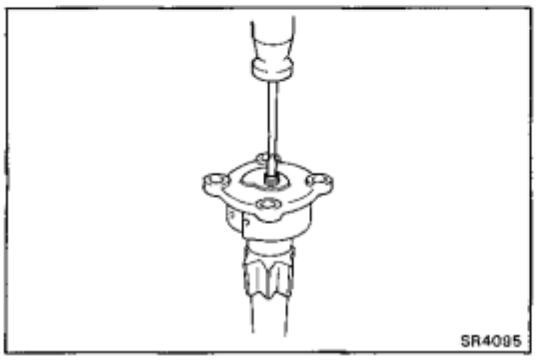

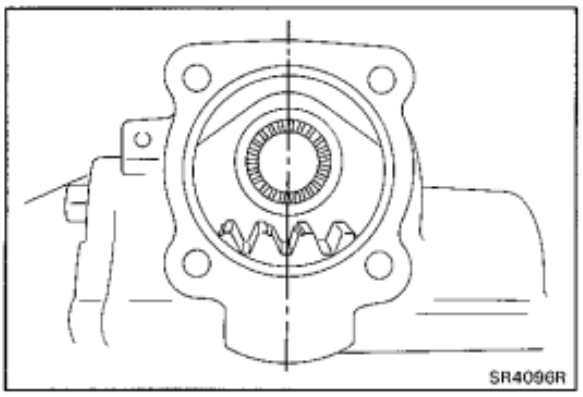

(c) Set the worm gear at the center of the gear housing.

(d) Insert and push the cross shaft into the gear housing so that the center teeth mesh together.

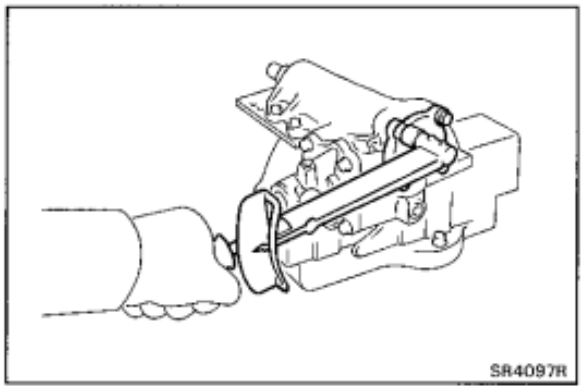

(e) Install the four cap bolts. Torque the bolts in a diagonal pattern.

Torque: 470 kg-cm (34 ft-lb, 46 N·m)

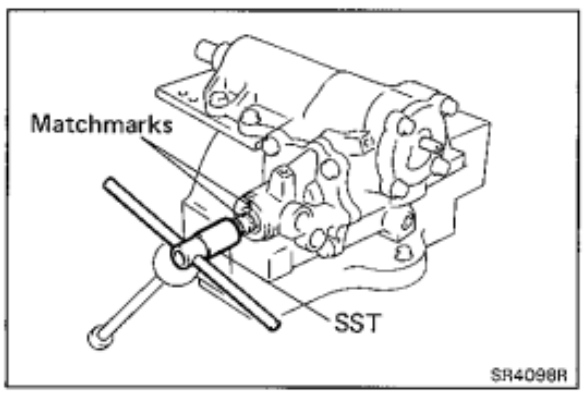

4. DETERMINE CENTER POSITION OF GEAR HOUSING

(a) Using SST, turn the worm shaft so full lock in both directions and determine the exact center.

SST 09616-00010

(b) Place matchmarks on the worm shaft and housing to show neutral position.

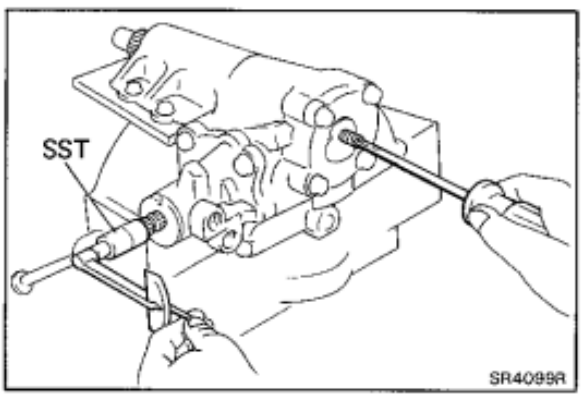

5. ADJUST CROSS SHAFT ADJUSTING SCREW

(a) Install SST with a torque meter on the worm shaft.

SST 09616-00010

(b) Turn the adjusting screw while measuring the preloaduntilit is correct.

Total preload: (at starting)

7.5 — 11 kg-cm (6.5 — 9.6 in.-lb, 0.74 — 9.6 N·m)

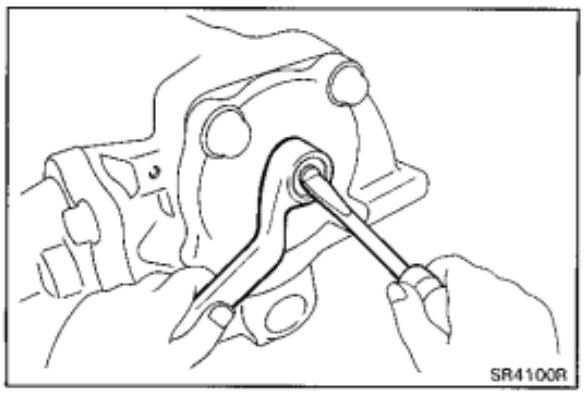

6. INSTALL NEW WASHER

7. INSTALL AND TIGHTEN LOCK NUT

Torque the lock nut while holding the adjusting screw.

Torque: 470 kg-cm (34 ft-lb, 46 N·m)

8. CHECK TOTAL PRELOAD

STEERING LINKAGE (HEAVY-DUTY)

REMOVAL AND INSTALLATION OF STEERING LINKAGE

Remove and install the parts as shown.

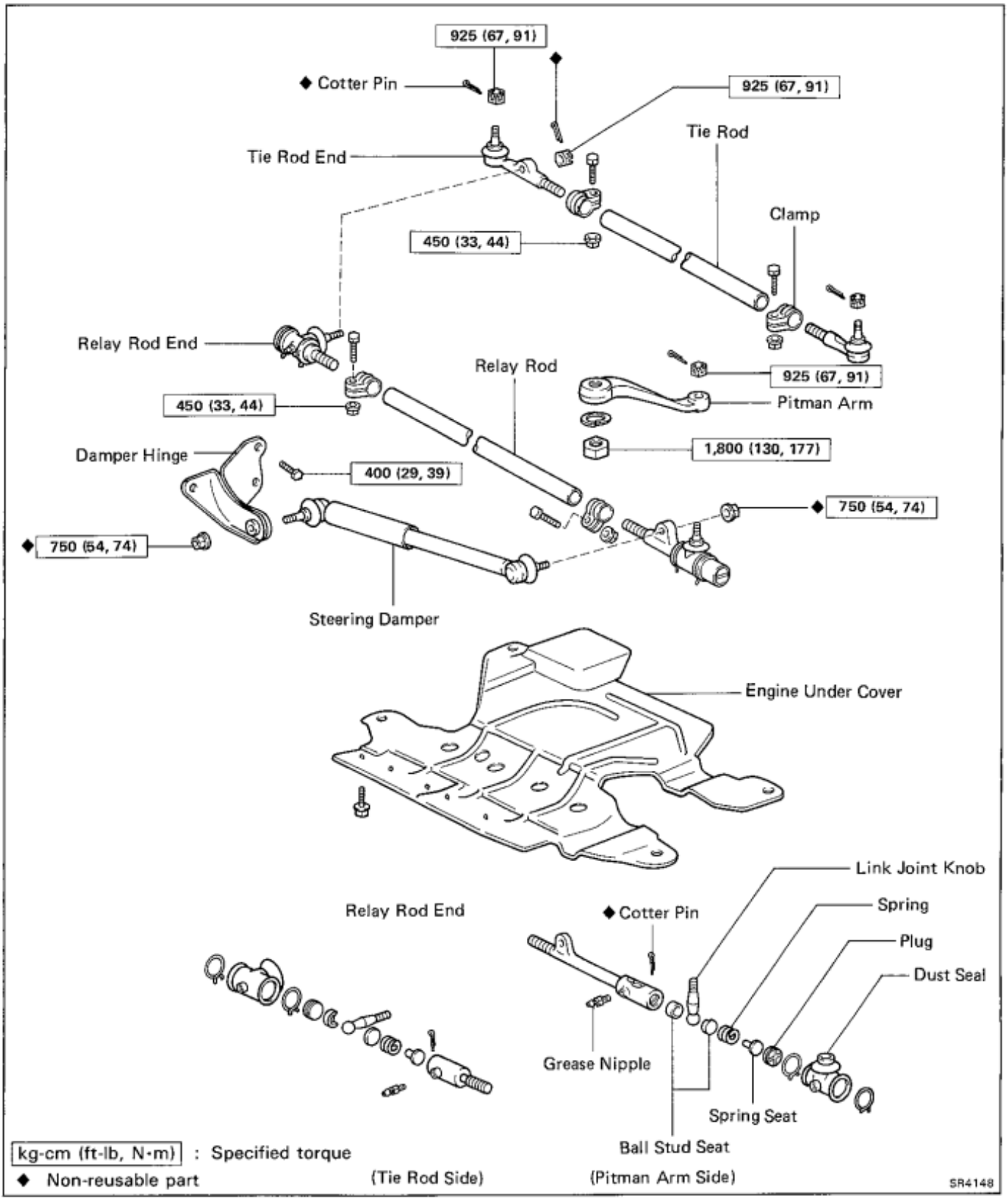

HINT: (See page SR-76)

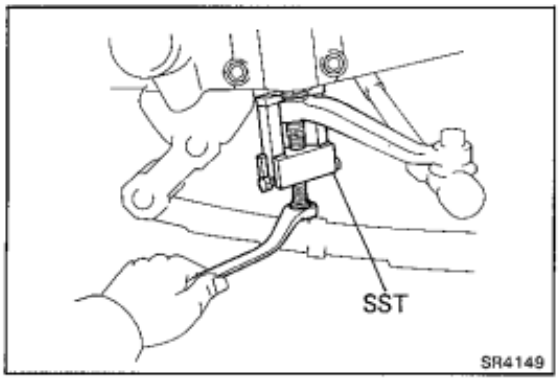

(MAIN POINTS OF REMOVAL AND INSTALLATION)

1. DISCONNECT AND CONNECT PITMAN ARM FROM/TO SECTOR SHAFT

(a) Loosen the pitman arm nut.

(b) Using SST, disconnect pitman arm from sector shaft.

SST 09628-62011

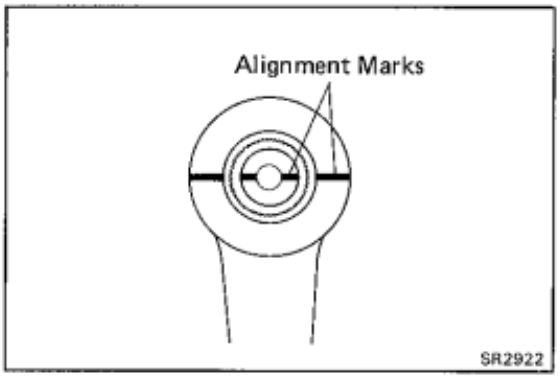

(c) When connecting, align alignment marks on the pitman arm and the sector shaft, and install the spring washer and nut.

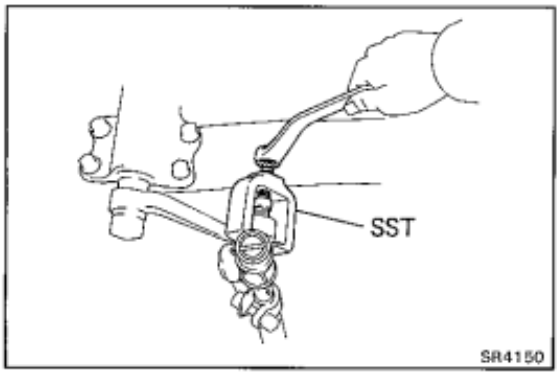

2. DISCONNECT PITMAN ARM FROM RELAY ROD

(a) Remove the cotter pin and nut.

HINT: Before removing the arm, temporarily install the pitman arm nut.

(b) Using SST, disconnect the pitman arm from relay rod.

SST 09611-22012

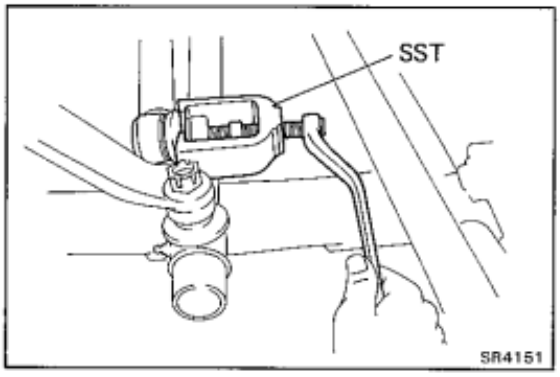

3. DISCONNECT STEERING DAMPER FROM RELAY ROD

(a) Remove the nut.

(b) Using SST, disconnect steering damper from relay rod.

SST 09611-22012

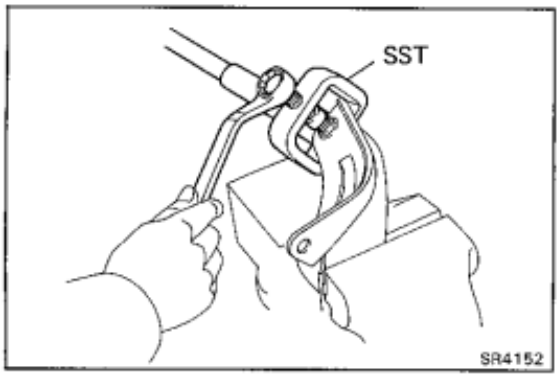

4. DISCONNECT STEERING DAMPER FROM HINGE

(a) Clamp the hinge in a vise.

(b) Using SST, disconnect the damper from hinge.

SST 09628-12022

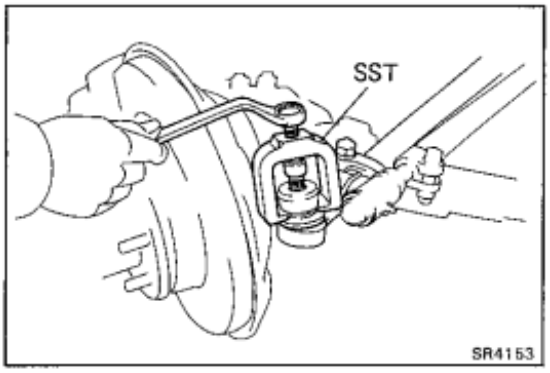

5. DISCONNECT TIE ROD FROM KNUCKLE ARM

(a) Remove the cotter pin and nut.

(b) Using SST, disconnect the tie rod from knuckle arm.

SST 09611-22012

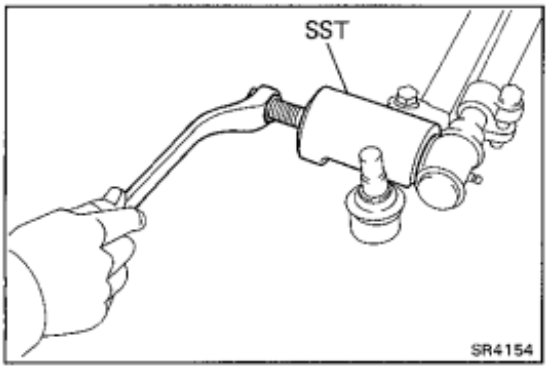

6. DISCONNECT RELAY ROD FROM TIE ROD

(a) Remove the cotter pin and nut.

(b) Using SST, disconnect the relay rod from tie rod.

SST 09610-20012

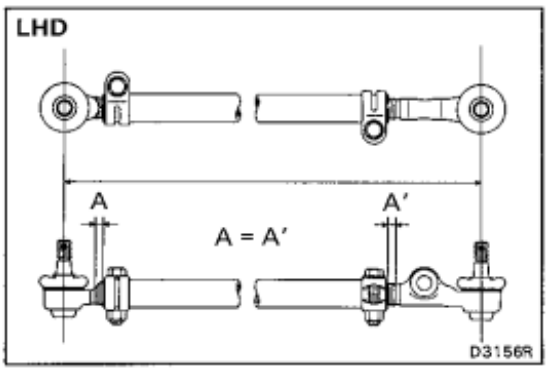

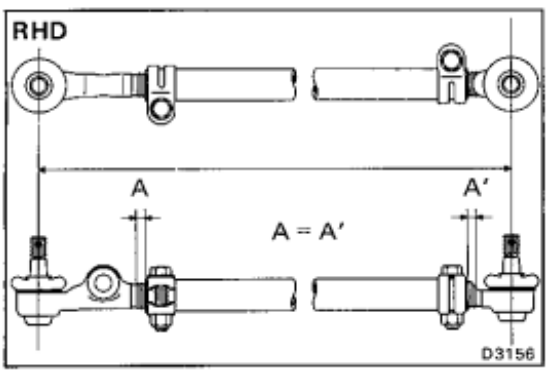

7. IF NECESSARY, ADJUST TIE ROD LENGTH

(a) Loosen the tie rod end clamp.

(b) Turn the tie rod ends equal amounts into the tie rod tube. Tie rods should be approximately 1,207 mm (47.51 in.).

(c) Temporarily tighten the tie rod end clamp.

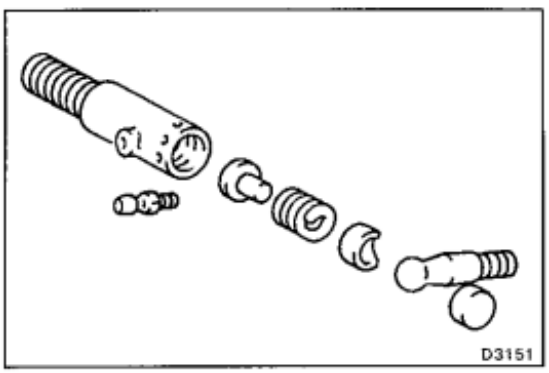

8. IF NECESSARY, REPLACE RELAY ROD END

(a) Loosen the relay rod end clamp and remove the relay rod end.

(b) Remove the cotter pin.

(c) Using a screwdriver, remove the plug, two ball stud seats, link joint knob, spring and spring seat.

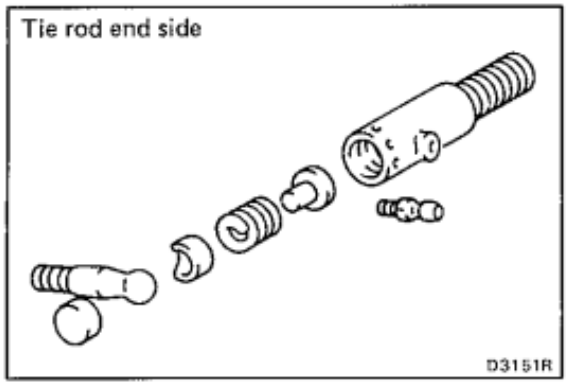

(d) Apply molybdenum disulphide lithium base grease to the joint parts.

(e) Install the spring seat, spring, link joint knob and two ball stud seats.

(f) Tighten the plug completely.

(g) Loosen the plug 1 — 1 1/3 turns and install a new cotter pin.

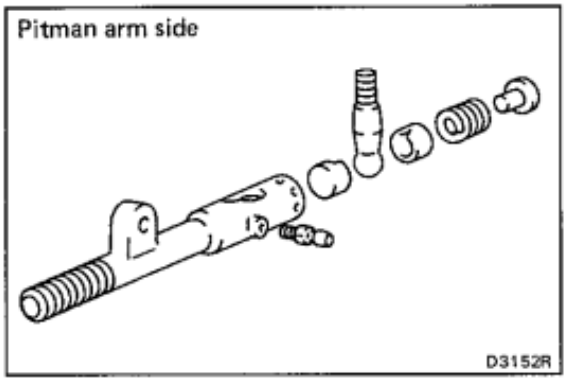

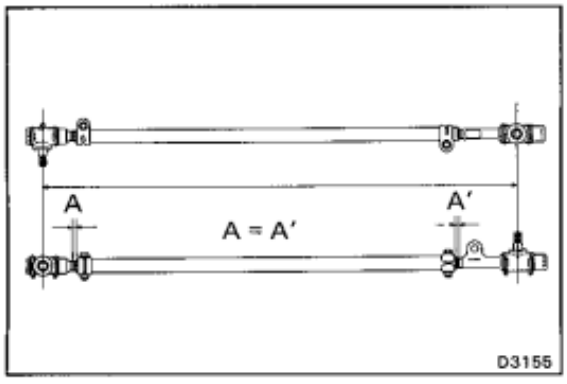

(h) Turn the relay rod ends equal amounts into the relay rod tube. Relay rod should be approximately 960.5 mm (37.81 in.).

(i) Torque the clamp bolts.

Torque: 450 kg-cm (33 ft-lb, 44 N·m)

STEERING

Specifications

Steering column	Steering wheel freeplay		40 mm (1.57 in.) or less		
	Collar No.1 outer diameter		17.989 – 17.996 mm	0.7082 – 0.7085 in.	
			17.996 – 18.003 mm	0.7085 – 0.7088 in.	
			18.003 – 18.010 mm	0.7088 – 0.7091 in.	
			18.010 – 18.017 mm	0.7091 – 0.7093 in.	
			18.017 – 18.024 mm	0.7093 – 0.7096 in.	
	Collar No.2 outer diameter		17.982 – 18.000 mm	0.7080 – 0.7087 in.	
			18.000 – 18.018 mm	0.7087 – 0.7094 in.	
	Tilt steering support shim thickness	Mark			
		None	0.197 – 0.203 mm	0.0078 – 0.0080 in.	
		5	0.495 – 0.505 mm	0.0195 – 0.0199 in.	
		8	0.795 – 0.805 mm	0.0313 – 0.0317 in.	
		14	1.395 – 1.405 mm	0.0549 – 0.0553 in.	
		18	1.795 – 1.805 mm	0.0707 – 0.0711 in.	
Manual gear housing	Sector shaft thrust washer thickness		1.95 mm	0.0768 in.	
			2.00 mm	0.0787 in.	
			2.05 mm	0.0807 in.	
	Sector shaft end cover bushing inside diameter	No.1	36.055 – 36.065 mm	1.4195 – 1.4199 in.	
		2	36.045 – 36.055 mm	1.4191 – 1.4195 in.	
		3	36.035 – 36.045 mm	1.4187 – 1.4191 in.	
		4	36.025 – 36.035 mm	1.4183 – 1.4187 in.	
	Worm shaft preload	at starting	3.5 – 5 kg-cm	3.0 – 4.3 in.-lb	0.34 – 0.49 N·m
	Total preload	at starting	8 – 11 kg-cm	6.9 – 9.5 in.-lb	0.78 – 1.08 N·m
Power steering	Drive belt tension at 10 kg (22.0 lb, 98 N)				
	FJ series	New belt	7 – 9.5 mm	0.28 – 0.37 in.	
		Used belt	8 – 10 mm	0.32 – 0.39 in.	
	LJ series	New belt	8 – 12 mm	0.32 – 0.47 in.	
		Used belt	10 – 15 mm	0.39 – 0.59 in.	
	RJ series	New belt	6 – 10 mm	0.24 – 0.39 in.	
		Used belt	7 – 11 mm	0.28 – 0.43 in.	
	Drive belt tension w/ SST	New belt	45 – 55 kg		
		Used belt	20 – 35 kg		
	Maximum rise of oil level		5 mm	0.20 in.	
	Oil pressure at idle speed	Minimum			
	FJ series		80 kg/cm²	1,138 psi	7,855 kPa
	HZJ and PZJ series		85 kg/cm²	1,209 psi	8,336 kPa
	LJ and RJ series		75 kg/cm²	1,067 psi	7,355 kPa
	Steering effort	Maximum	4 kg	8.8 lb	39 N
	Rotor shaft bushing oil clearance	STD	0.01 – 0.03 mm	0.0004 – 0.0012 in.	
		Maximum	0.07 mm	0.0028 in.	
	Vane plate to rotor groove clearance				
	FJ series	Maximum	0.028 mm	0.0011 in.	
	LJ, RJ series	Maximum	0.06 mm	0.0024 in.	
	Vane plate				
	FJ series	Minimum height	8.1 mm	0.319 in.	
		Minimum thickness	1.797 mm	0.0707 in.	
		Minimum length	14.988 mm	0.5901 in.	
	LJ, RJ series	Minimum height	7.8 mm	0.307 in.	
		Minimum thickness	1.7 mm	0.067 in.	
		Minimum length	14.97 mm	0.5894 in.	

Specifications (Cont'd)

Power steering (cont'd)	Vane plate length			
	Rotor and cam ring Mark			
		None	14.996 – 14.998 mm	0.5904 – 0.5905 in.
		1	14.994 – 14.996 mm	0.5903 – 0.5904 in.
		2	14.992 – 14.994 mm	0.5902 – 0.5903 in.
		3	14.990 – 14.992 mm	0.59016 – 0.59024 in.
		4	14.988 – 14.990 mm	0.5901 – 0.5902 in.
	Flow control valve spring length			
	FJ series		35 – 37 mm	1.38 – 1.46 in.
	HZJ and PZJ series		50 – 55 mm	1.97 – 2.17 in.
	LJ and RJ series		47 – 50 mm	1.85 – 1.97 in.
	Pump rotating torque		2.8 kg-cm (2.4 in.-lb, 0.3 N·m) or less	
	Steering rack runout	Maximum	0.15 mm	0.006 in.
	Cross shaft adjusting screw thrust clearance		0.03 – 0.05 mm	0.0012 – 0.0020 in.
	Worm gear preload	at starting	3 – 5.5 kg-cm	2.6 – 4.8 in.-lb 0.3 – 0.5 N·m
	Total preload	at starting	7.5 – 11 kg-cm	6.5 – 9.6 in.-lb 0.74 – 9.6 N·m

Torque Specifications

Steering column	Part tightened	kg-cm	ft-lb	N·m
	Upper bracket × Column tube	75	65 in.-lb	7.4
	Column hole cover × Body	130	9	13
	Column tube × Body	250	18	25
	Steering wheel × Main shaft	350	25	34
	Main shaft × Intermediate shaft	360	26	35
	Intermediate shaft × Worm shaft	360	26	35
	Pawl set bolt	185	13	18
	Tilt lever retainer	185	13	18
	Tilt steering support × Breakaway bracket	185	13	18
	Tilt steering support stopper bolt	100	7	10
	Tilt steering support × Upper bracket	75	65 in.-lb	7.4
	Breakaway bracket × Column tube	185	13	18
	Column hole cover × Column tube	185	13	18
	Main shaft × Intermediate shaft	250	18	25
	Breakaway bracket × Body	250	18	25
	Intermediate shaft No.1 × No.2	360	26	35
Manual gear housing	Universal joint	360	26	35
	Gear housing × Body	1,450	105	142
	Pitman arm × Gear housing	1,800	130	177
	Sector shaft adjusting screw lock nut	450	33	44
	Sector shaft end cover	1,150	83	113
	Bleeder plug	200	14	20
	Worm shaft adjusting screw lock nut	1,110	80	109

Torque Specifications (Cont'd)

	Part tightened		kg-cm	ft-lb	N·m
Power steering (PS pump)	**FJ series**				
	Pressure tube		370	27	36
	PS pump × Bracket		450	33	44
	PS pump × Adjusting stay		375	27	37
	Adjusting stay × Bracket		375	27	37
	Pulley set nut		450	33	44
	Reservoir set bolt	12 mm bolt	130	9	13
		14 mm bolt	420	30	41
	Pressure port union		700	51	69
	HZJ and PZJ series				
	Union bolt		450	33	44
	PS pump × Body		400	29	39
	Return tube		80	69 in.-lb	7.8
	Front housing × Rear housing		375	27	37
	Drive gear lock nut		700	51	69
	Valve lock screw		650	47	64
	LJ and RJ series				
	Union bolt		450	33	44
	PS pump × Bracket		450	33	44
	Pulley set nut		450	33	44
	Pressure port union		700	51	69
	Suction port union		130	9	13
	Front housing × Rear housing		470	34	46
Power steering (Gear housing)	Pressure and return tube		450	33	44
	Universal joint		360	26	35
	Gear housing × Body		1,450	105	142
	Gear housing × Pitman arm		1,800	130	177
	Cross shaft adjusting screw set nut		470	34	46
	Cross shaft end cover lock bolt		470	34	46
	Worm gear valve body set bolt		470	34	46
	Plunger guide nut		205	15	20
Steering linkage	Pitman arm × Relay rod (Heavy-duty)		925	67	91
	Relay rod × Steering damper (Light-duty)		750	54	74
	Tie rod × Steering damper		750	54	74
	Steering damper × Damper hinge (Heavy-duty)		750	54	74
	Damper hinge × Body (Light-duty)		400	29	39
	Damper hinge × Body (Heavy-duty)		195	14	19
	Relay rod × Tie rod (Light-duty)		925	67	91
	Relay rod × Knuckle arm		925	67	91
	Tie rod × Knuckle arm		925	67	91
	Tie or relay rod clamp		450	33	44

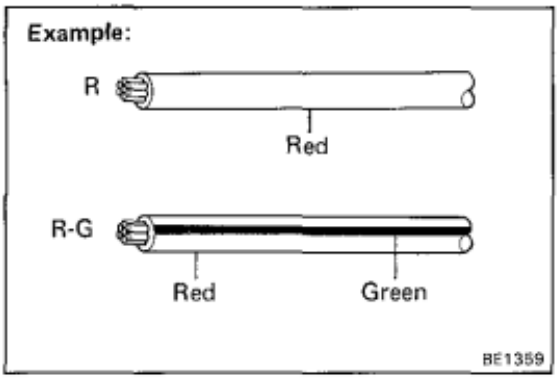

GENERAL INFORMATION

Wiring color code

Wire colors are indicated by an alphabetical code.

B = Black	L = Blue	R = Red
BR = Brown	LG = Light Green	V = Violet
G = Green	O = Orange	W = White
GR = Gray	P = Pink	Y = Yellow

The first letter indicates the basic wire color and the second letter indicates the color of the stripe.

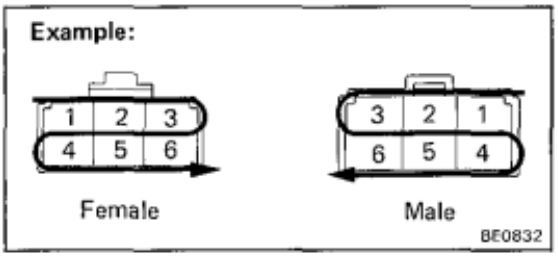

Connector

1. PIN NUMBER OF FEMALE CONNECTOR

Numbered in order from upper left to lower right.

2. PIN NUMBER OF MALE CONNECTOR

Numbered in order from upper right to lower left.

HINT: When connectors with different or the same number of terminals are used with the same parts, each connector name (letter of the alphabet) and pin number is specified.

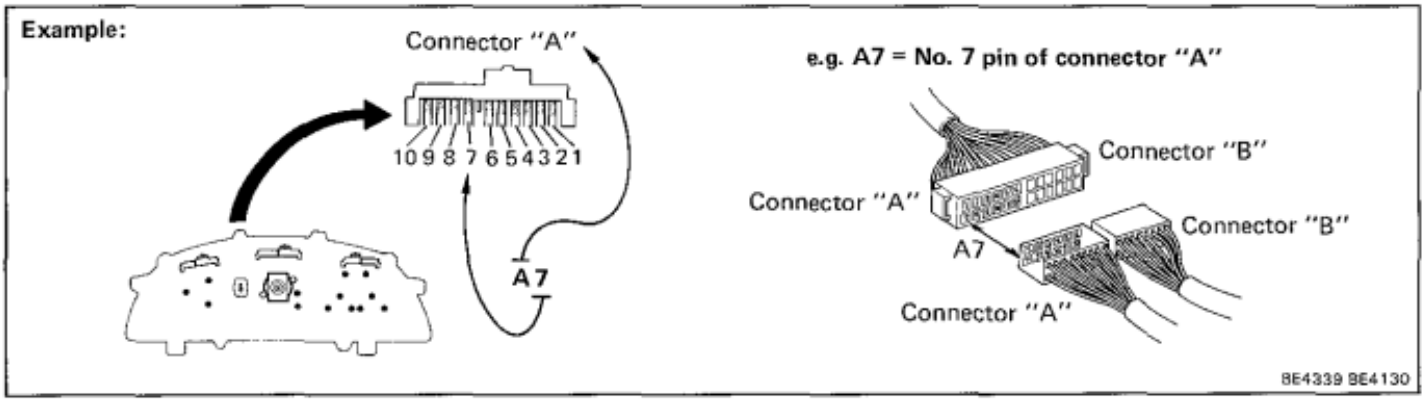

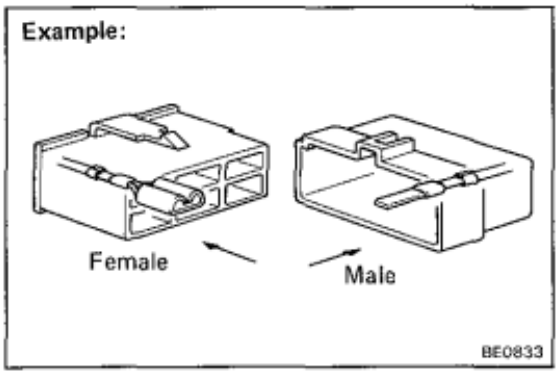

3. DISTINCTION OF MALE AND FEMALE CONNECTORS

Male and female connectors are distinguished by shape of their internal pins.

(a) All connectors are shown from the open end, and the *lock is on top.*

(b) To pull apart the connectors, pull on the connector itself, not the wires.

HINT: Check to see what kind of connector you are disconnecting before pulling apart.

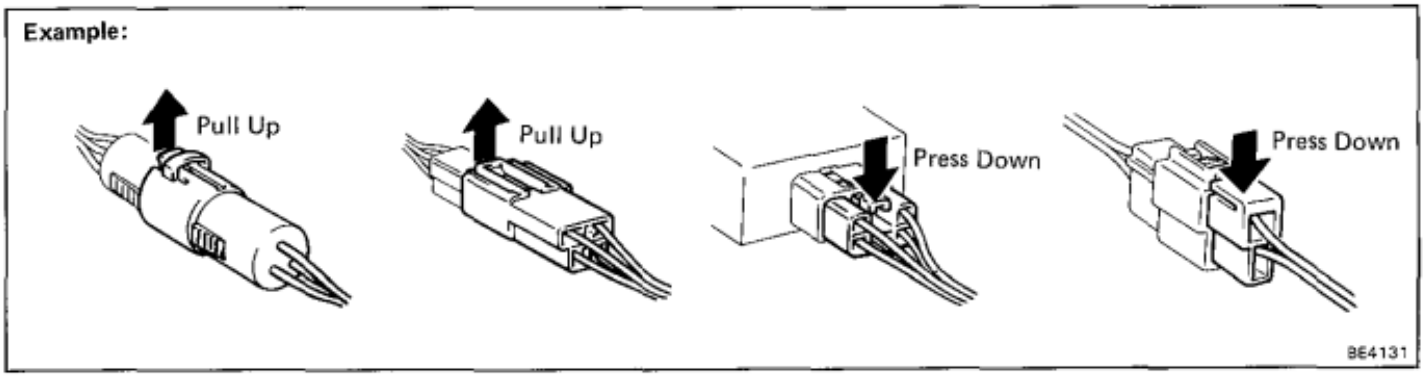

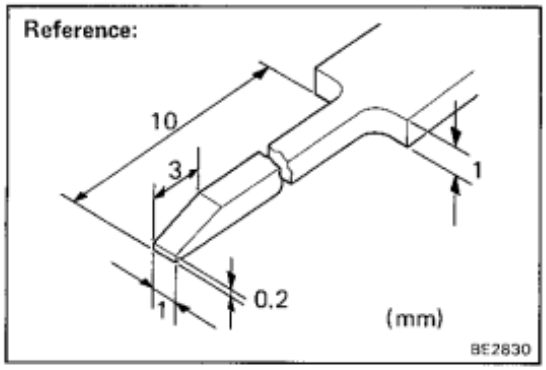

How to Replace Terminal

(with Terminal Retainer Type)

HINT: To remove the terminal for this type of connector, please construct and use the special tool or like object shown on the left.

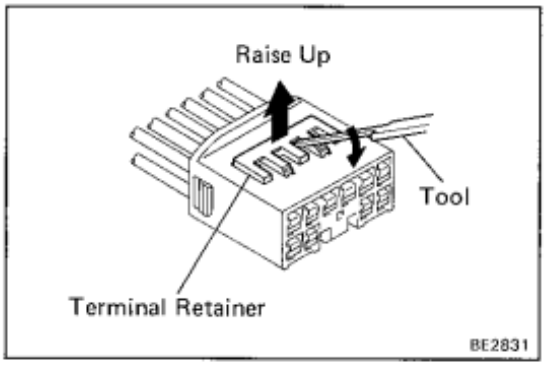

1. DISCONNECT CONNECTOR

Disconnect the connector according to the instructions on BE-2.

2. DISCONNECT TERMINAL FROM CONNECTOR

(a) Using the special tool, raise the retainer up to the temporary lock position.

HINT: The needle insertion position varies according to the connector's shape (number of terminals, etc.), so check the position before inserting it.

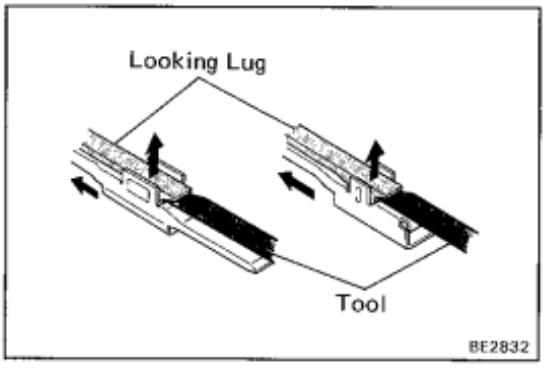

(b) Using the special tool, release the locking lug and pull the terminal out from rear.

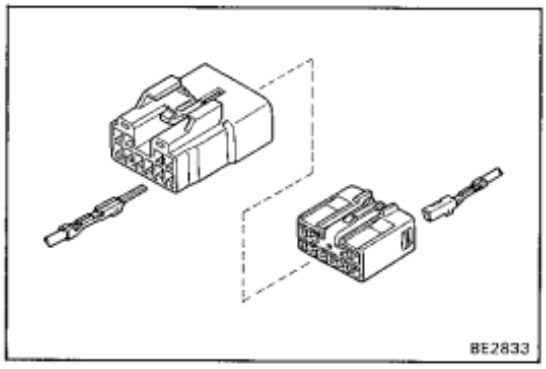

3. INSTALL TERMINAL TO CONNECTOR

(a) Insert the terminal.

HINT:

- Make sure the terminal is positioned correctly.
- Insert the terminal until the locking lug locks firmly.
- Insert the terminal with retainer in the temporary lock position.

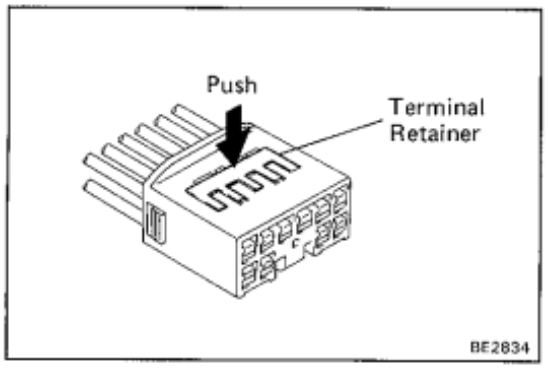

(b) Push the retainer in as far as the full lock position.

4. CONNECT CONNECTOR

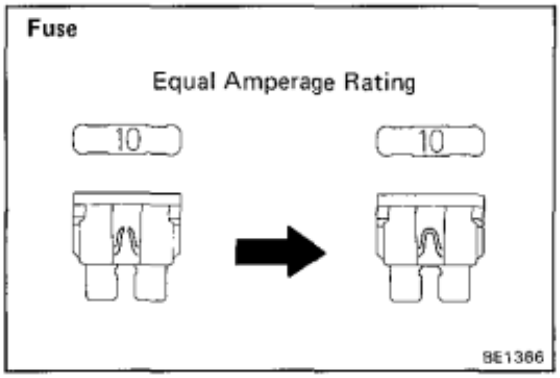

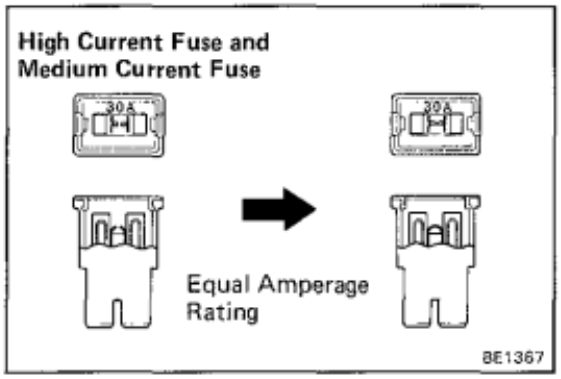

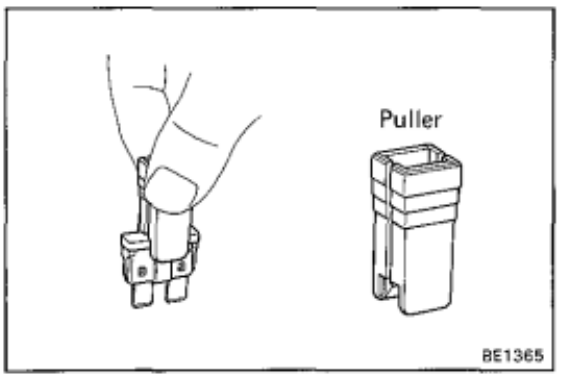

Replacement of Fuse

HINT: If replacing the fuse, be sure to replace it with a fuse with and equal amperage rating.

NOTICE:

1. **Turn off all electrical components and the ignition switch before replacing a fuse. Do not exceed the fuse amperage rating.**
2. **Always use a fuse puller for removing and inserting a fuse. Remove and insert straight in and out without twisting. Twisting could force open the terminals too much, resulting in a bad connection.**

If a fuse continues to blow, a short circuit is indicated. The system must be checked by a qualified technician.

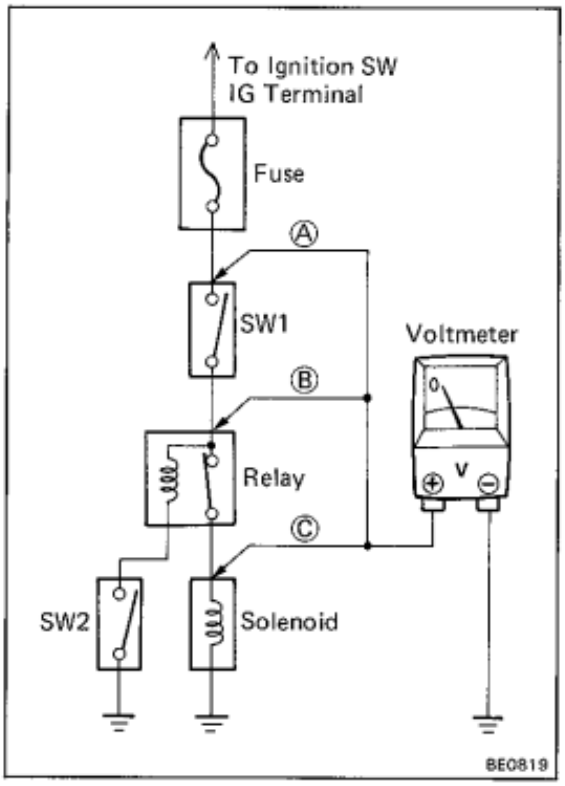

Check for Voltage

(a) Establish conditions in which voltage is present at the check point.

Example:

Ⓐ — Ignition switch on.

Ⓑ — Ignition switch and switch 1 (SW1) on.

Ⓒ — Ignition switch, switch 1 (SW1) and relay on (switch 2 (SW2) off).

(b) Using a voltmeter, connect the negative (—) lead to a good ground point or negative (—) battery terminal and the positive (+) lead to the connector or component terminal. This check can be done with a test bulb instead of a voltmeter.

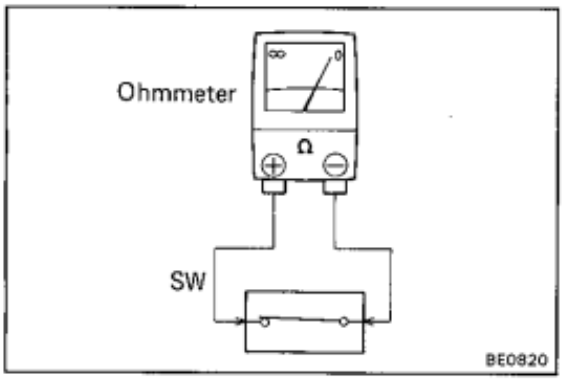

Check for Continuity and Resistance

(a) Disconnect the battery terminal or wire so there is no voltage between the check points.

(b) Contact the two leads of an ohmmeter to each of the check points.

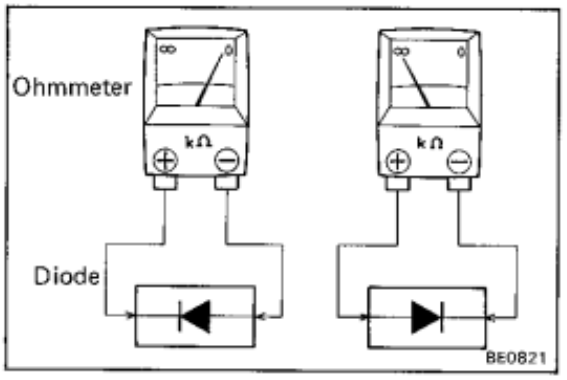

If the circuit has diodes, reverse the two leads and check again.

When contacting the negative (—) lead to the diode positive (+) side and the positive (+) lead to the negative (—) side, there should be continuity. When contacting the two leads in reverse, there should be no continuity.

HINT: Specifications may vary depending on the type of tester, so refer to the tester's instruction manual before performing the inspection.

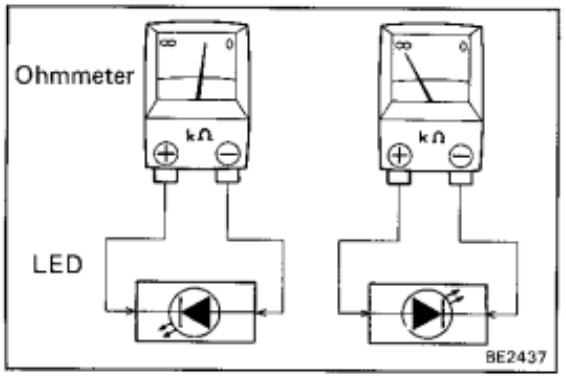

Check LED (Light Emitting Diode) in the same manner as that for diodes.

- Use a tester with a power source of 3 V or greater to overcome the circuit resistance.
- If a suitable tester is not available, apply battery voltage and check that the LED that the LED lights up.

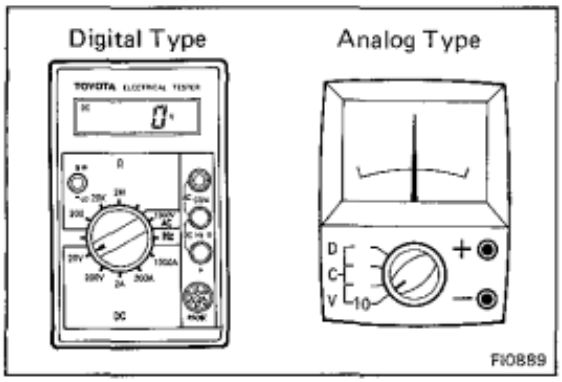

(c) Use a volt/ohmmeter with high impedance (10 k/V minimum) for troubleshooting of the electrical circuit.

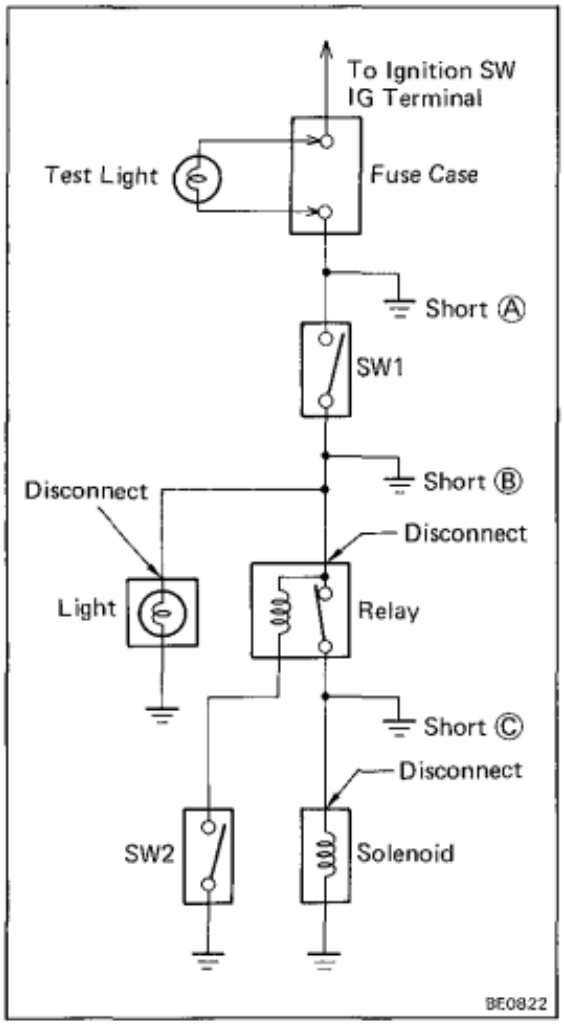

Check for Short Circuit

(a) Remove the blown fuse and eliminate all loads from the fuse.

(b) Connect a test bulb in place of the fuse.

(c) Establish conditions in which the test bulb comes on.

Example:

Ⓐ – Ignition switch on.

Ⓑ – Ignition switch and switch 1 (SW1) on.

Ⓒ – Ignition switch, switch 1 (SW1) and relay on (connect the relay) and switch 2 (SW2) off (or disconnect switch 2 (SW2)).

(d) Disconnect and reconnect the connectors while watching the test bulb.

The short lies between the connector where the test bulb stays lit and the connector where the bulb goes out.

(e) Find the exact location of the short by lightly shaking the problem wire along the body.

POWER SOURCE

Parts Location

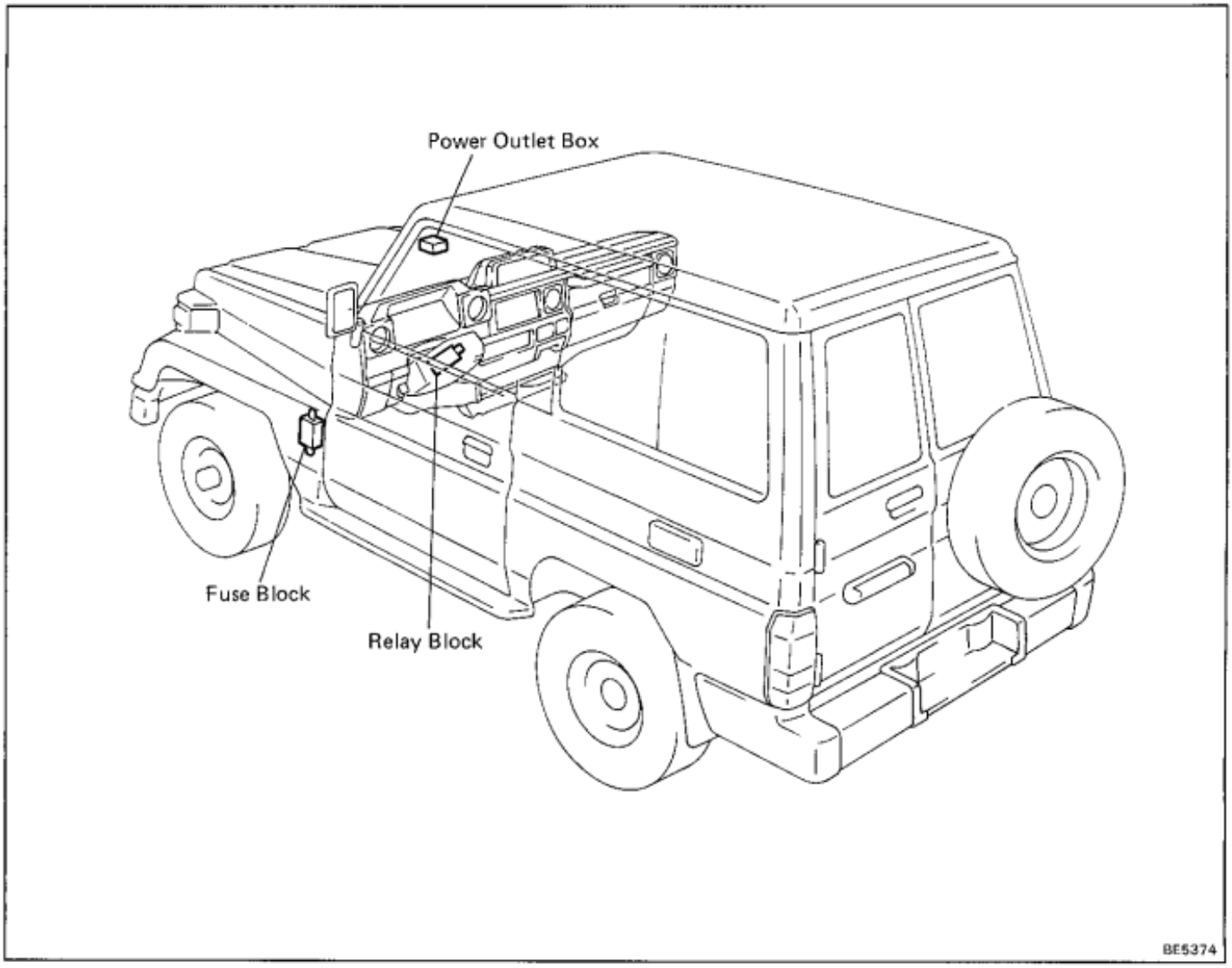

Fuse Block

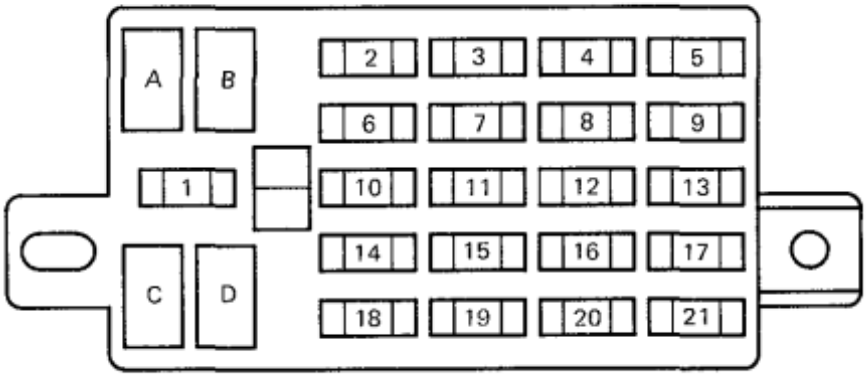

Fuses

Europe

1.	*1 FUEL-HTR	15A
	*2 IGN	7.5A
2.	(SPARE)	7.5A
3.	A.C	10A
4.	DIFF	30A
5.	TAIL (LH)	10A
6.	(SPARE)	15A
7.	TURN	7.5A
8.	STOP	10A
9.	TAIL (RH)	10A
10.	CHARGE	7.5A
11.	DEFOG	15A
12.	DOME	7.5A
13.	HAZ-HORN	15A
14.	CIG	15A
15.	WIPER	20A
16.	HEAD (LH-LWR)	10A
17.	HEAD (LH-UPR)	10A
18.	*1 ST	7.5A
	*2 EFI	15A
19.	ENGINE	15A
20.	HEAD (RH-LWR)	10A
21.	HEAD (RH-UPR)	10A

*1: w/o EFI
*2: w/ EFI

Models except Europe

1.	FUEL-HTR	15A
2.	(SPARE)	7.5A
3.	DEFOG	15A
4.	GLOW	7.5A
5.	STOP	10A
6.	(SPARE)	15A
7.	TAIL	20A
8.	GAVERNOR	30A
9.	DOME	7.5A
10.	CHARGE	7.5A
11.	A.C	10A
12.	ECD	15A
13.	HAZ-HORN	15A
14.	CIG	15A
15.	WIPER	20A
16.	DIFF	20A
17.	HEAD (LH)	10A
18.	ST	7.5A
19.	ENGINE	15A
20.	TURN	10A
21.	HEAD (RH-UPR)	10A

Medium Current Fuses

A.	DOOR	30A
B.	HEATER	30A
C.	POWER	30A
D.	—	

BE5328

Power Outlet Box

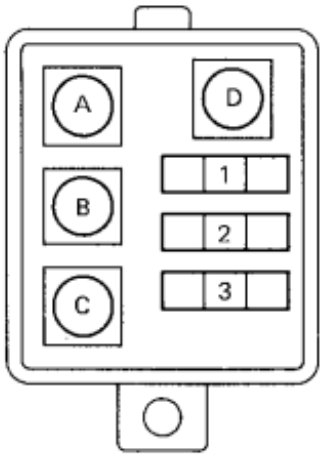

Fuses

	12V Vehicles			24V Vehicles	
1.	ACC	10A	1.	ACC	7.5A
2.	IG	10A	2.	IG	7.5A
3.	+B	20A	3.	+B	10A

Terminals

No.	Terminal Name	Connected Parts
A	ACC	Ignition Switch ACC
B	IG	Ignition Switch IG
C	+B	FL AM1
D	−E	Ground

Relay Block

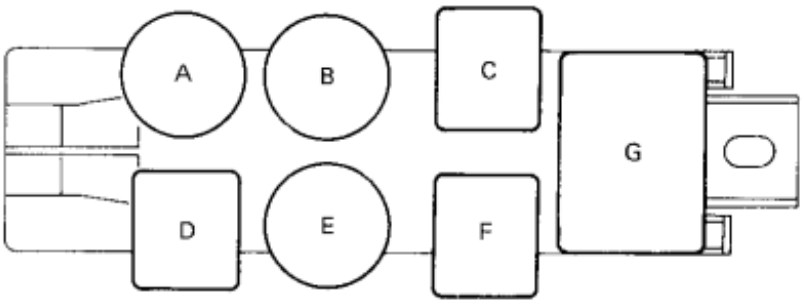

Relays

A. Taillight Control Relay
B. Transfer Control Relay
C. Front Heater Relay
D. Headlight Control Relay
E. Bulb Check Relay (Australia)
F. Headlight Dimmer Relay (Europe)
G. Turn Signal Flahser

Wiring Diagram

22R and 3F Engine

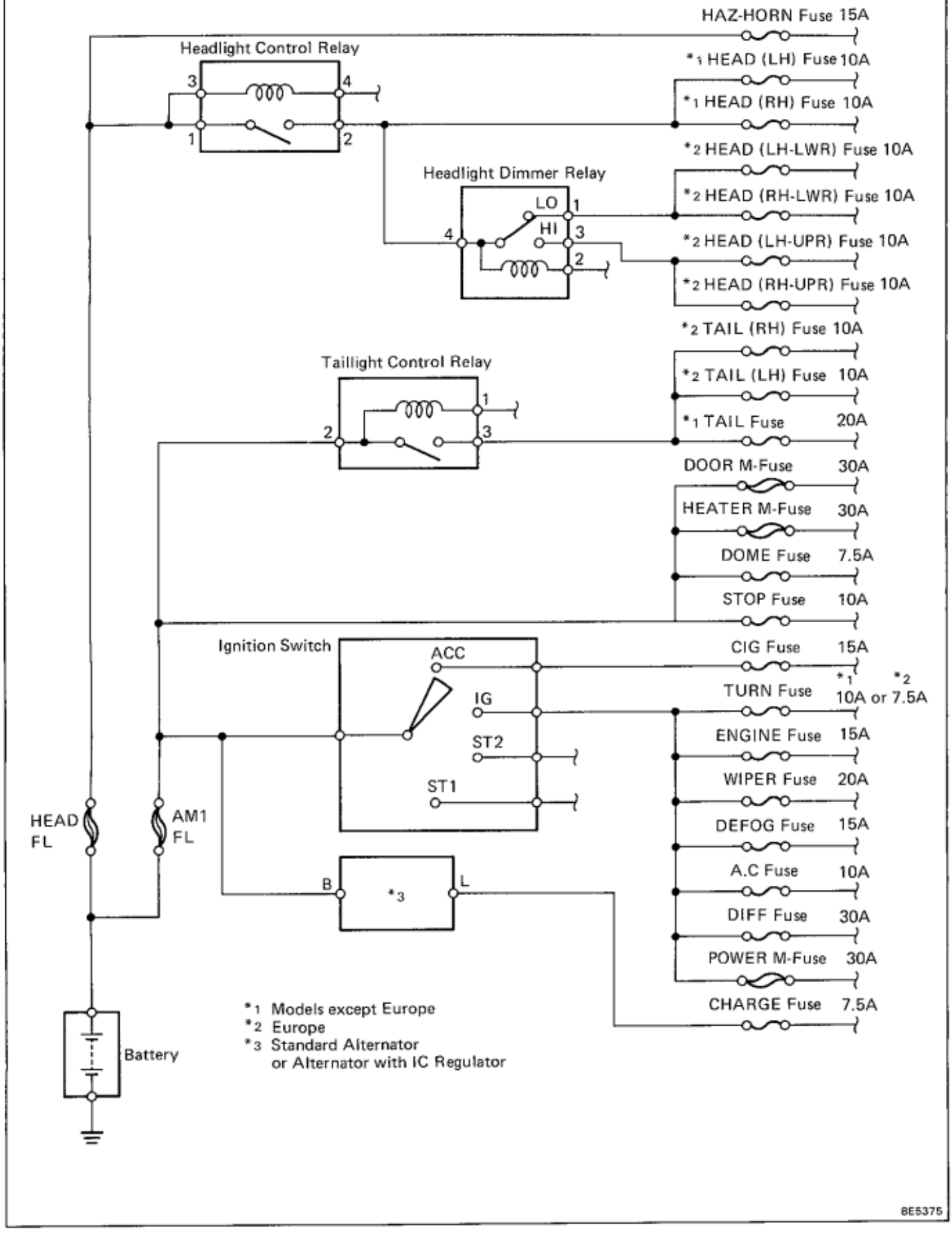

22R-E Engine

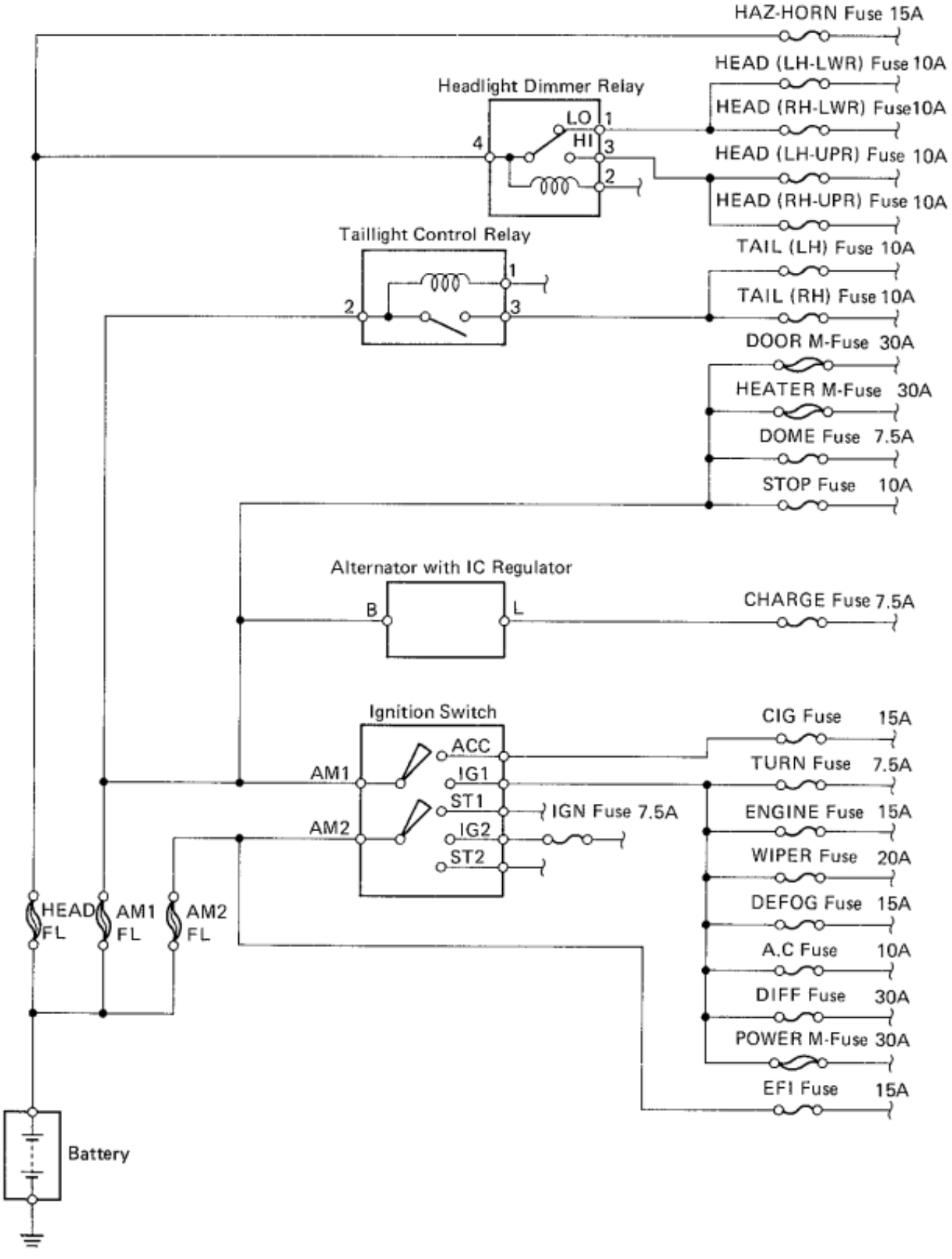
HAZ-HORN Fuse 15A
HEAD (LH-LWR) Fuse 10A
Headlight Dimmer Relay
LO
HI
HEAD (RH-LWR) Fuse10A
HEAD (LH-UPR) Fuse 10A
HEAD (RH-UPR) Fuse 10A
Taillight Control Relay
TAIL (LH) Fuse 10A
TAIL (RH) Fuse 10A
DOOR M-Fuse 30A
HEATER M-Fuse 30A
DOME Fuse 7.5A
STOP Fuse 10A
Alternator with IC Regulator
B
L
CHARGE Fuse 7.5A
Ignition Switch
ACC
IG1
ST1
IG2
ST2
AM1
AM2
IGN Fuse 7.5A
CIG Fuse 15A
TURN Fuse 7.5A
ENGINE Fuse 15A
WIPER Fuse 20A
DEFOG Fuse 15A
A.C Fuse 10A
DIFF Fuse 30A
POWER M-Fuse 30A
EFI Fuse 15A
HEAD FL
AM1 FL
AM2 FL
Battery
BE5330

1HZ, 1PZ, 3L, 2L-T Engine

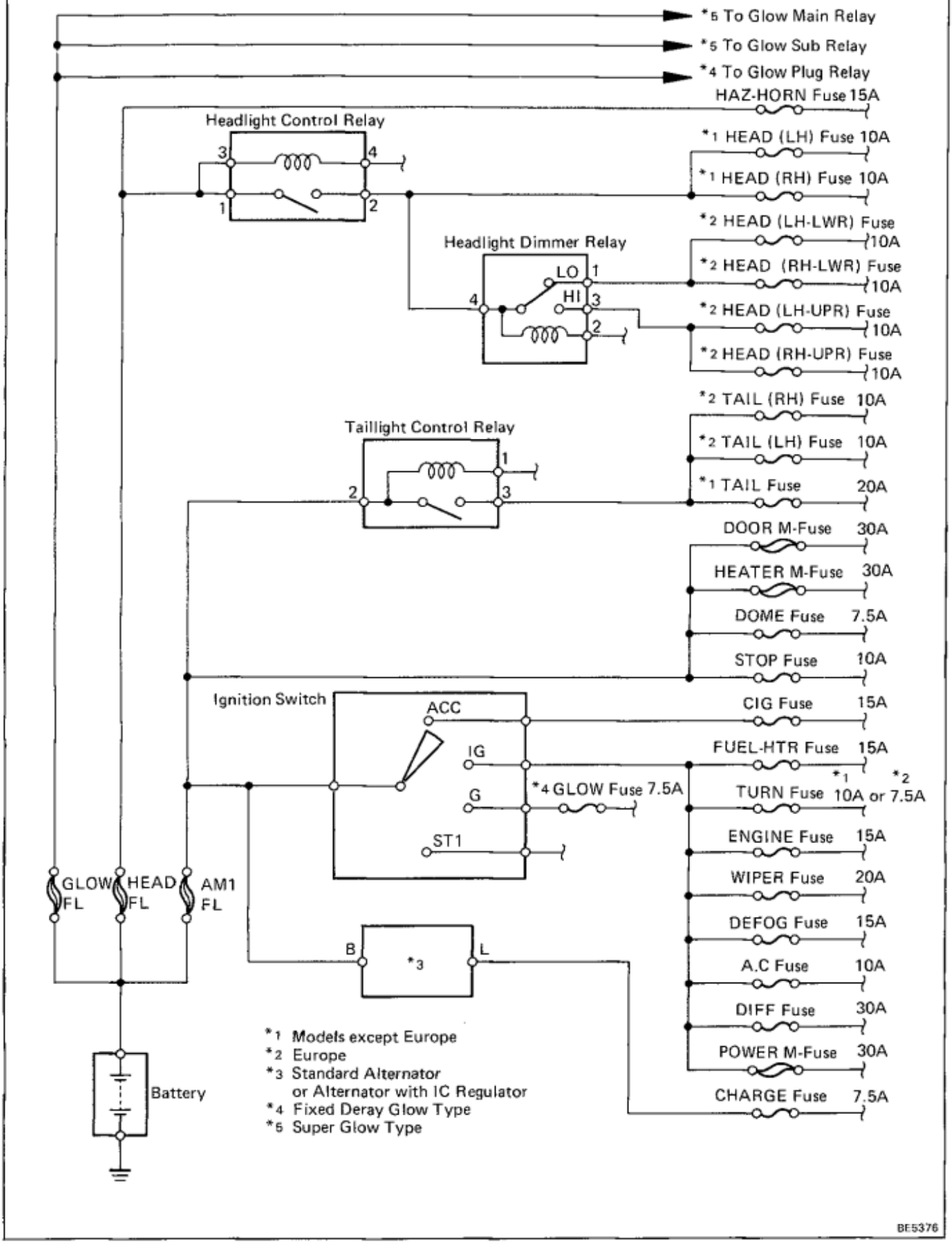

IGNITION SWITCH

Parts Location

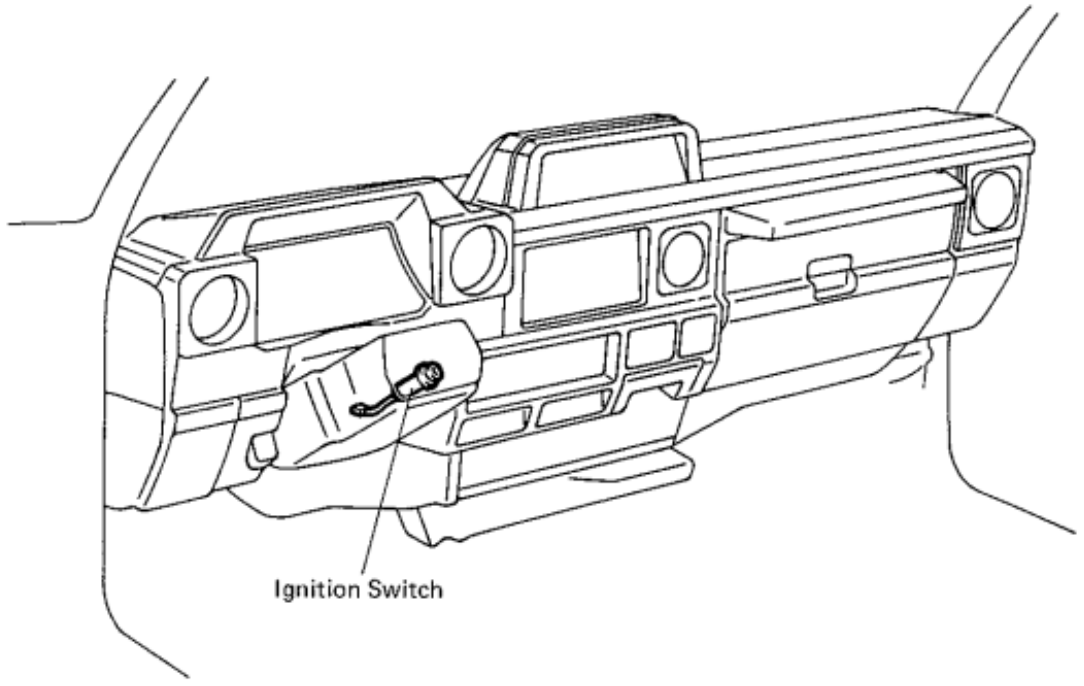

BE5331

Wiring and Connector Diagrams

(22R, 3F, 2L-T, engine and 1HZ, 1PZ engine w/ super glow)

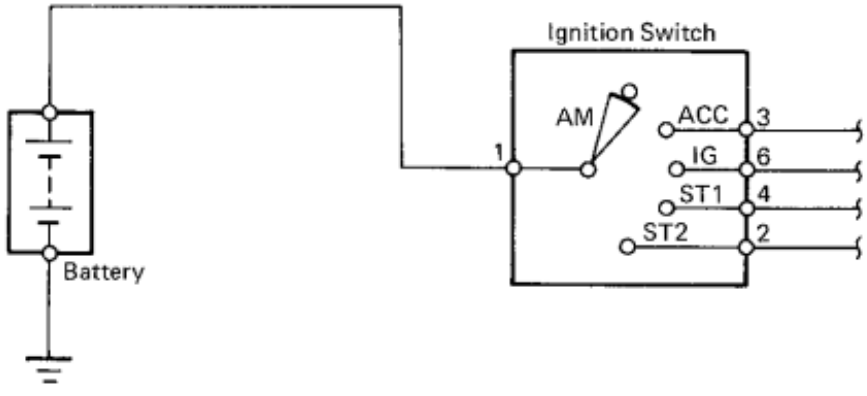

Ignition Switch

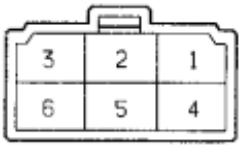

The POWER SOURCE CIRCUIT has been simplified. For full details, see pages BE-10, 11, 12.

BE5306 H-6-2

(1HZ, 1PZ, 3L engine w/o super glow)

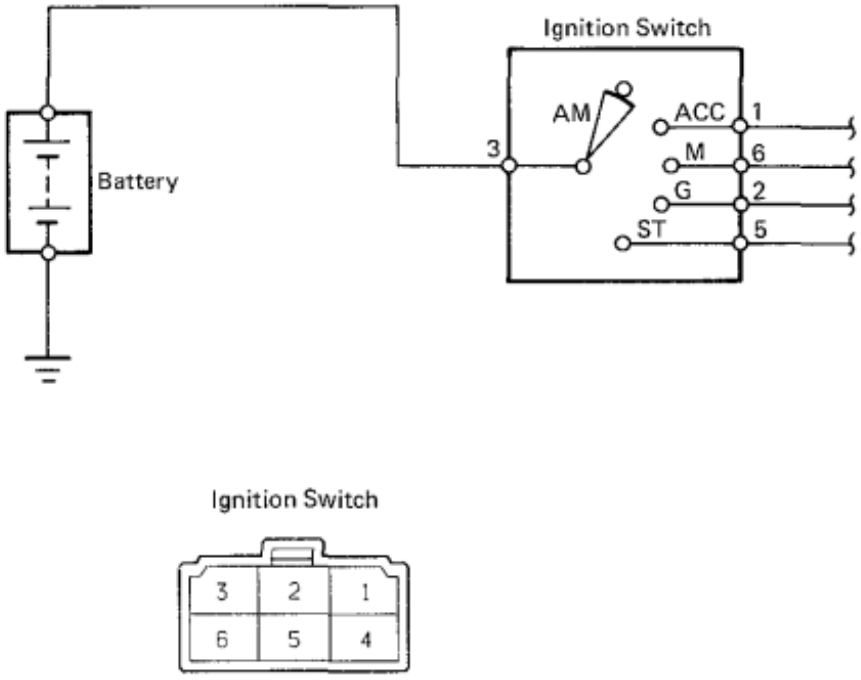

The POWER SOURCE CIRCUIT has been simplified. For full details, see pages BE-10, 11, 12.

BE5306 H-6-2

(22R-E engine)

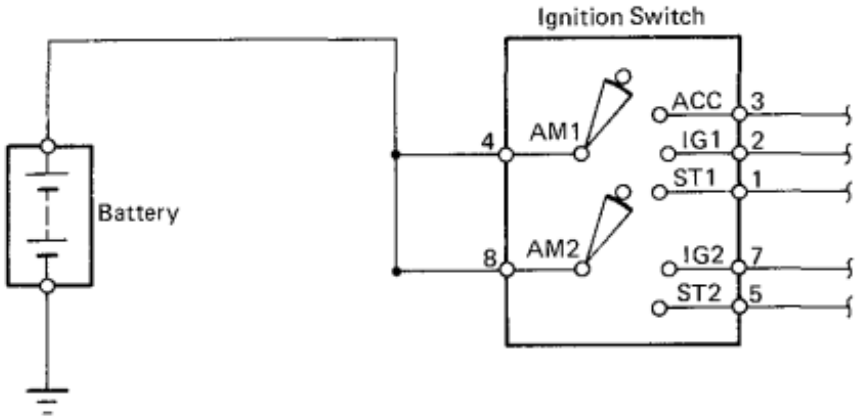

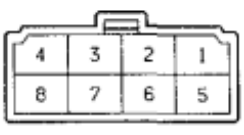

The POWER SOURCE CIRCUIT has been simplified. For full details, see pages BE-10, 11, 12.

BE5307 H-8-2

Parts Inspection

Ignition system

INSPECT SWITCH
(Ignition Switch/Continuity)

(22R, 3F, 2L-T engine and 1HZ, 1PZ engine w/ super glow)

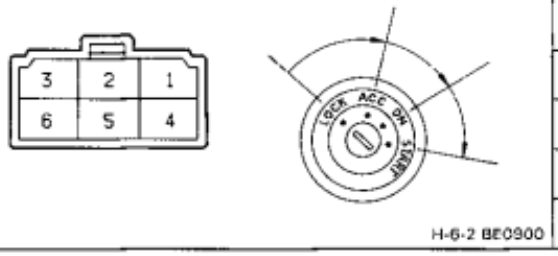

H-6-2 BE0900

Terminal / Switch Position	1	2	3	4	6
LOCK					
ACC	○		○		
ON	○		○		○
START	○	○		○	○

(1HZ, 1PZ, 3L engine w/o super glow)

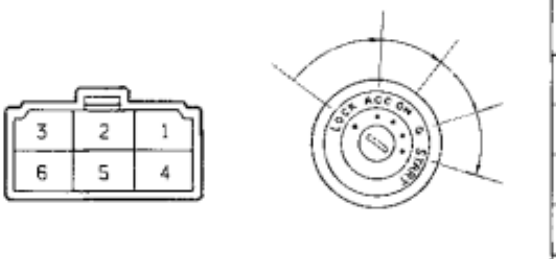

H-6-2 BE5308

Terminal / Switch Position	1	2	3	5	6
LOCK					
ACC	○		○		
ON	○		○		○
GLOW		○	○		○
START		○	○	○	○

(22R-E engine)

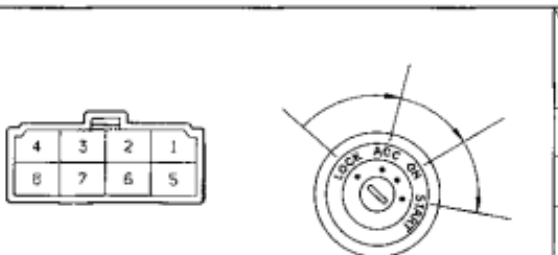

H-8-2 BE0900

Terminal / Switch Position	1	2	3	4	5	7	8
LOCK							
ACC			○	○			
ON		○	○	○		○	○
START	○	○		○	○	○	○

If continuity is not as specified, replace the switch.

LIGHTING SYSTEM

Parts Location

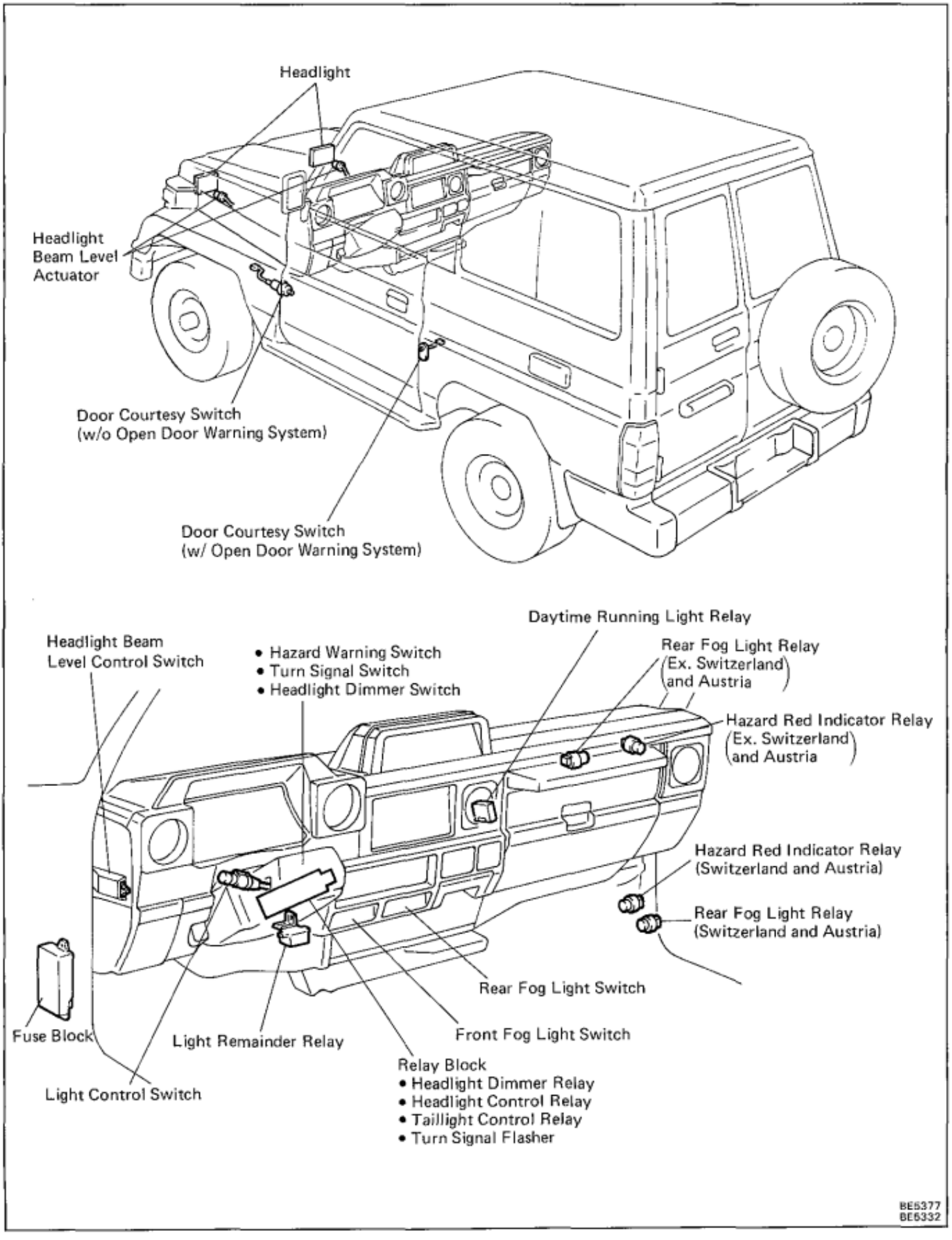

BE5377
BE5332

Wiring and Connector Diagrams

(Headlight and Taillight System)

• **Except Europe**

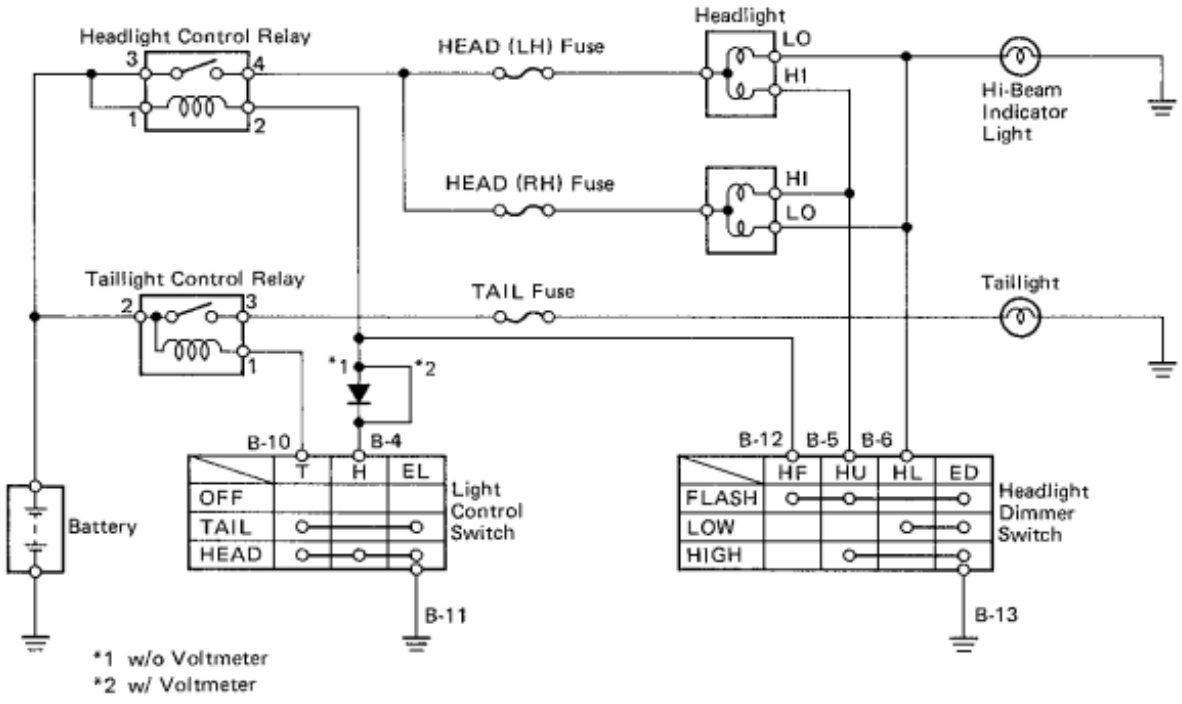

The POWER SOURCE CIRCUIT has been simplified. For full details, see pages BE-10, 11, 12.

• **Europe**

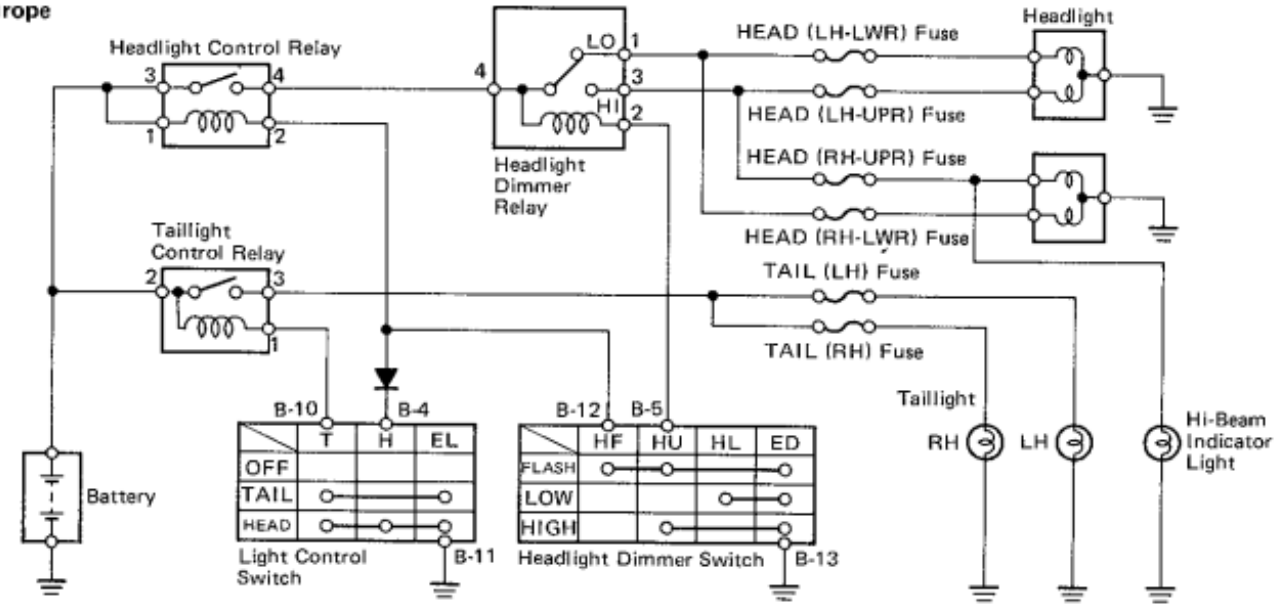

The POWER SOURCE CIRCUIT has been simplified. For full details, see pages BE-10, 11, 12.

• Light Control Switch
• Dimmer Switch

Headlight Control Relay

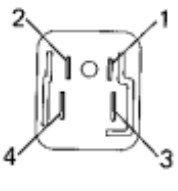

Taillight Control Relay

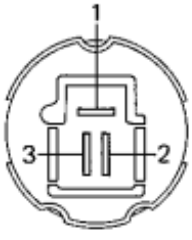

Headlight Dimmer Relay

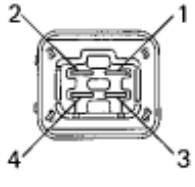

BE5333
BE5334
BE0111 BE1838 BE2763 BE1839

• **w/ Daytime Running Light System (with Rear Fog Light System)**

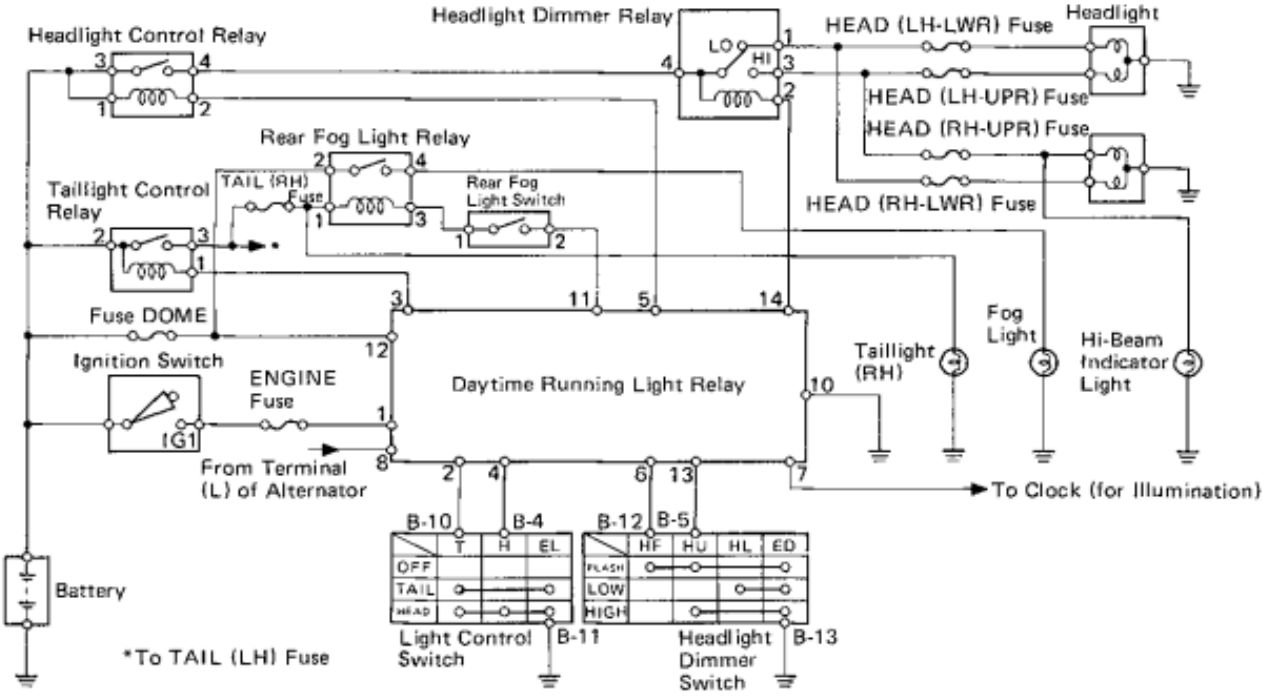

The POWER SOURCE CIRCUIT has been simplified. For full details, see pages BE-10, 11, 12.

• Light Control Switch
• Dimmer Switch

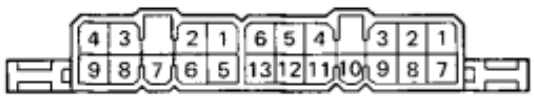

Daytime Running Light Relay

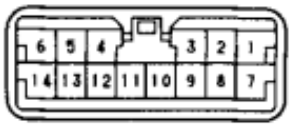

Headlight Control Relay

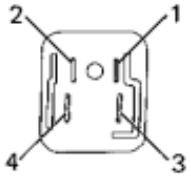

Taillight Control Relay

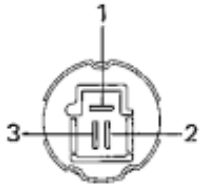

Headlight Dimmer Relay

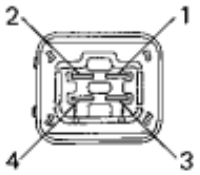

Rear Fog Light Switch

Rear Fog Light Relay

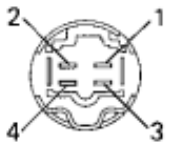

BE5335
BE0111 BE4219 BE1838
BE2763 BE1839 S-4-2-C BE1647

Front Fog Light System

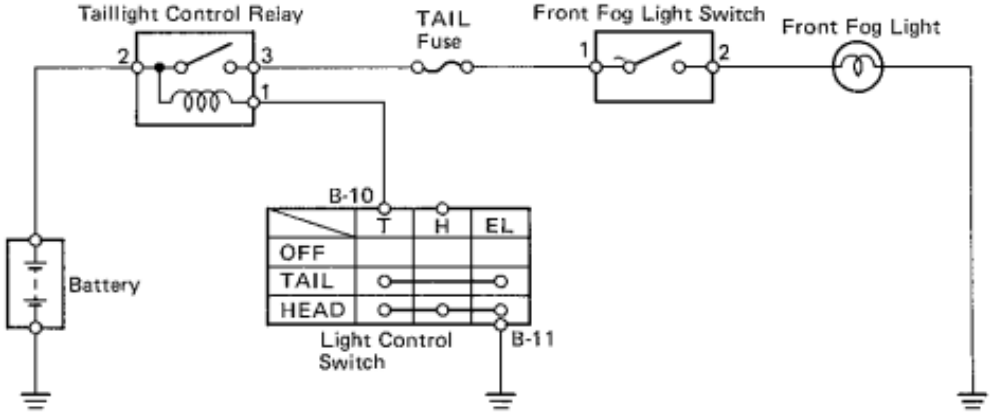

The POWER SOURCE CIRCUIT has been simplified. For full details, see pages BE-10, 11, 12.

Light Control Switch

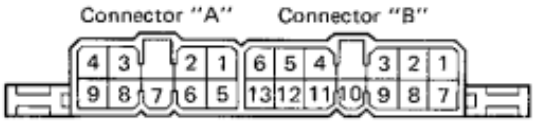

Taillight Control Relay

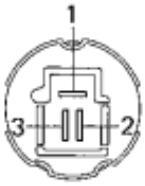

Front Fog Light Switch

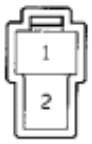

BE5336
BE0111 BE2763 H-2-2

Rear Fog Light System

w/ Daytime Running Light System

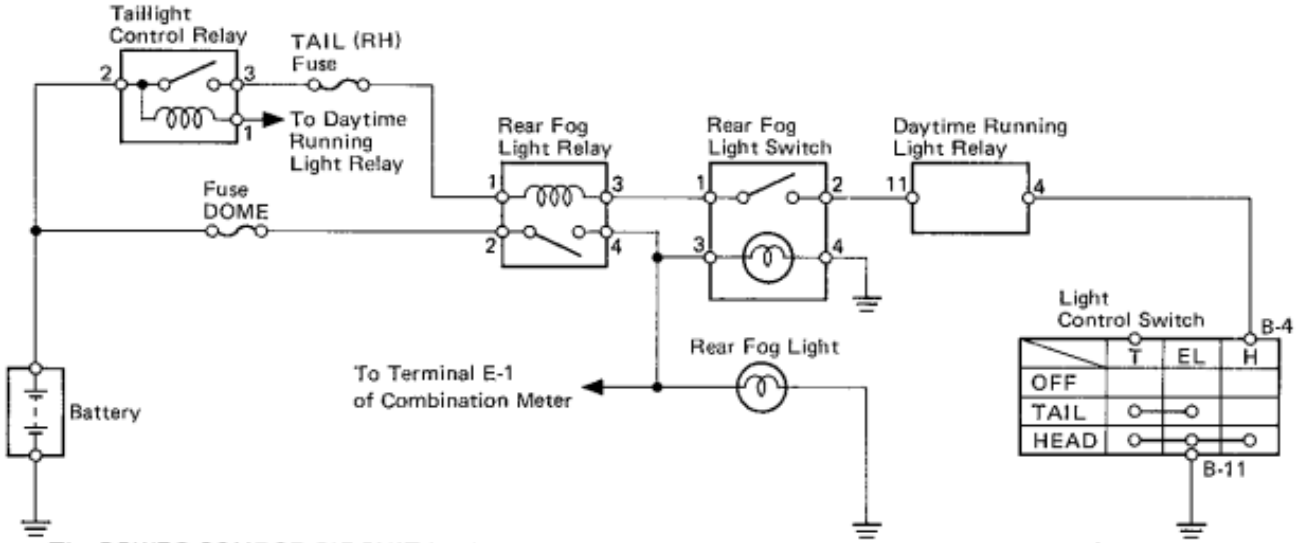

The POWER SOURCE CIRCUIT has been simplified. For full details, see pages BE-10, 11, 12.

Light Control Switch

Rear Fog Light Switch

Rear Fog Light Relay

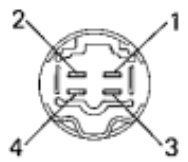

Daytime Running Light Relay

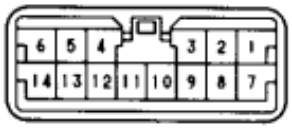

Taillight Control Relay

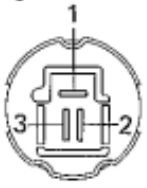

BE5337
BE0111 S-4-2-C BE1647
BE4219 BE2763

w/o Daytime Running Light System

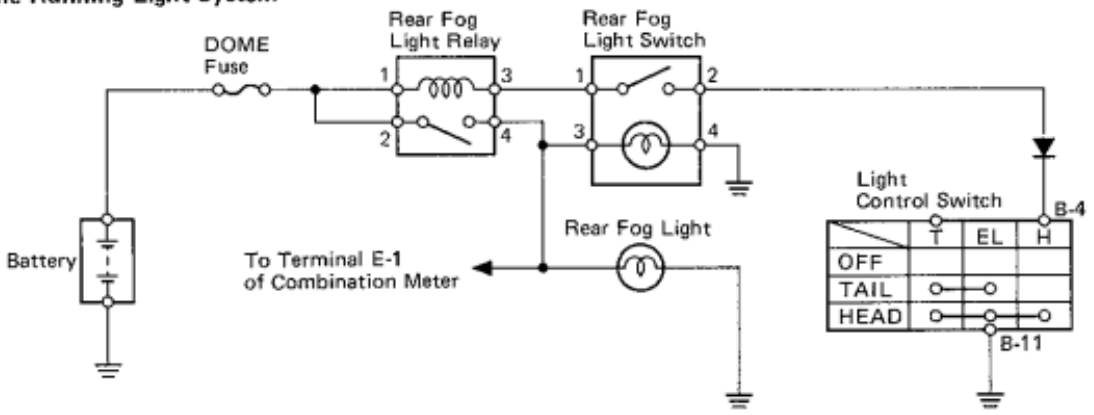

The POWER SOURCE CIRCUIT has been simplified. For full details, see pages BE-10, 11, 12.

Light Control Switch

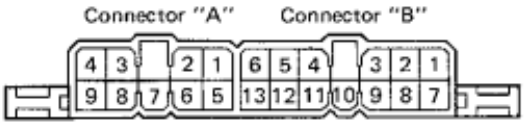

Rear Fog Light Switch

Rear Fog Light Relay

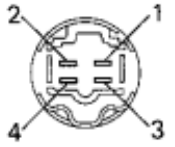

BE5338
BE0111 S-4-2-C BE1647

Turn Signal and Hazard Warning System

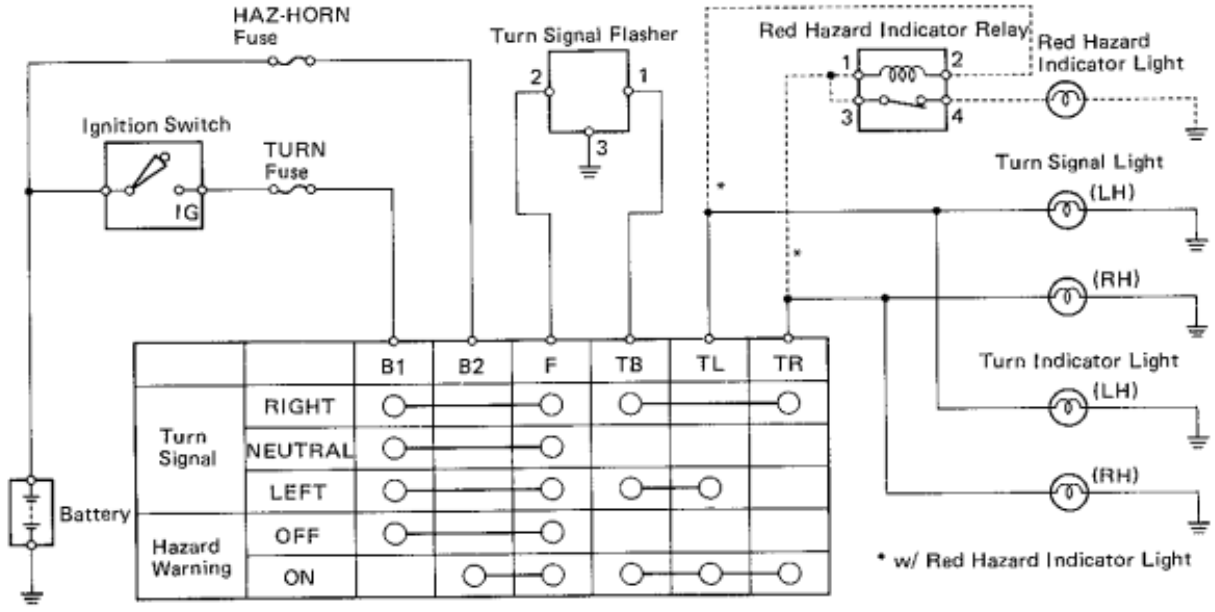

The POWER SOURCE CIRCUIT has been simplified. For full details, see pages BE-10, 11, 12.

- Turn Signal Switch
- Hazard Warning Switch

Connector "A" Connector "B"

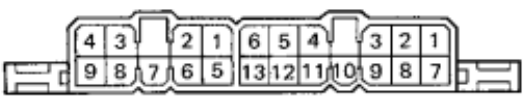

Turn Signal Flasher

12 V Vehicles

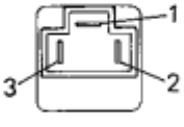

24 V Vehicles

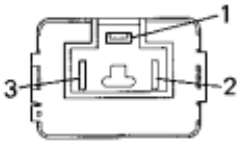

Red Hazard
Indicator Relay

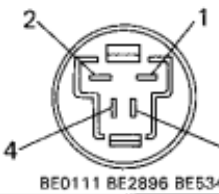

BE5410
BE0111 BE2896 BE5340 AC1377

Lights-On Warning System

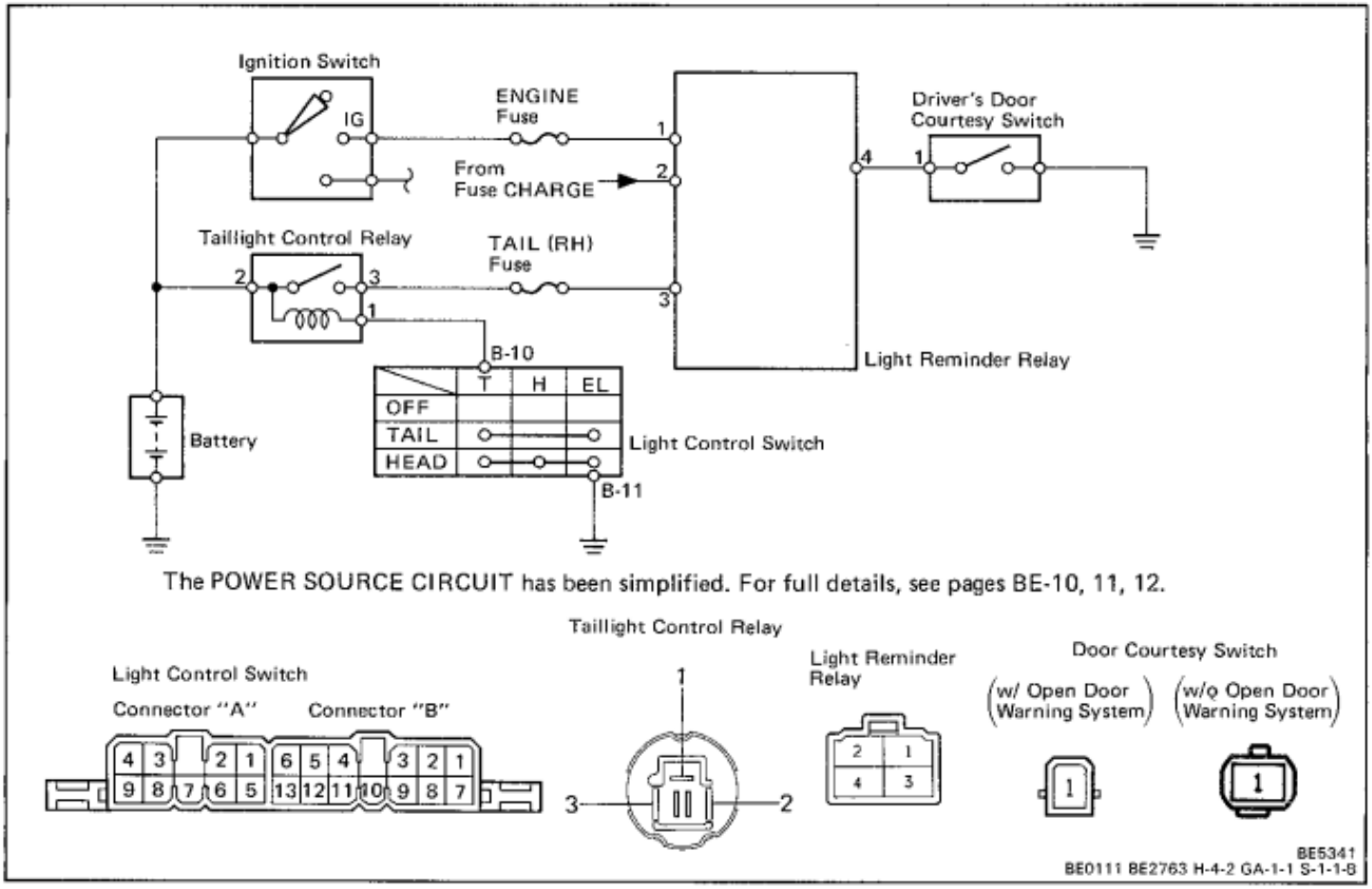

Headlight Beam Level Control System

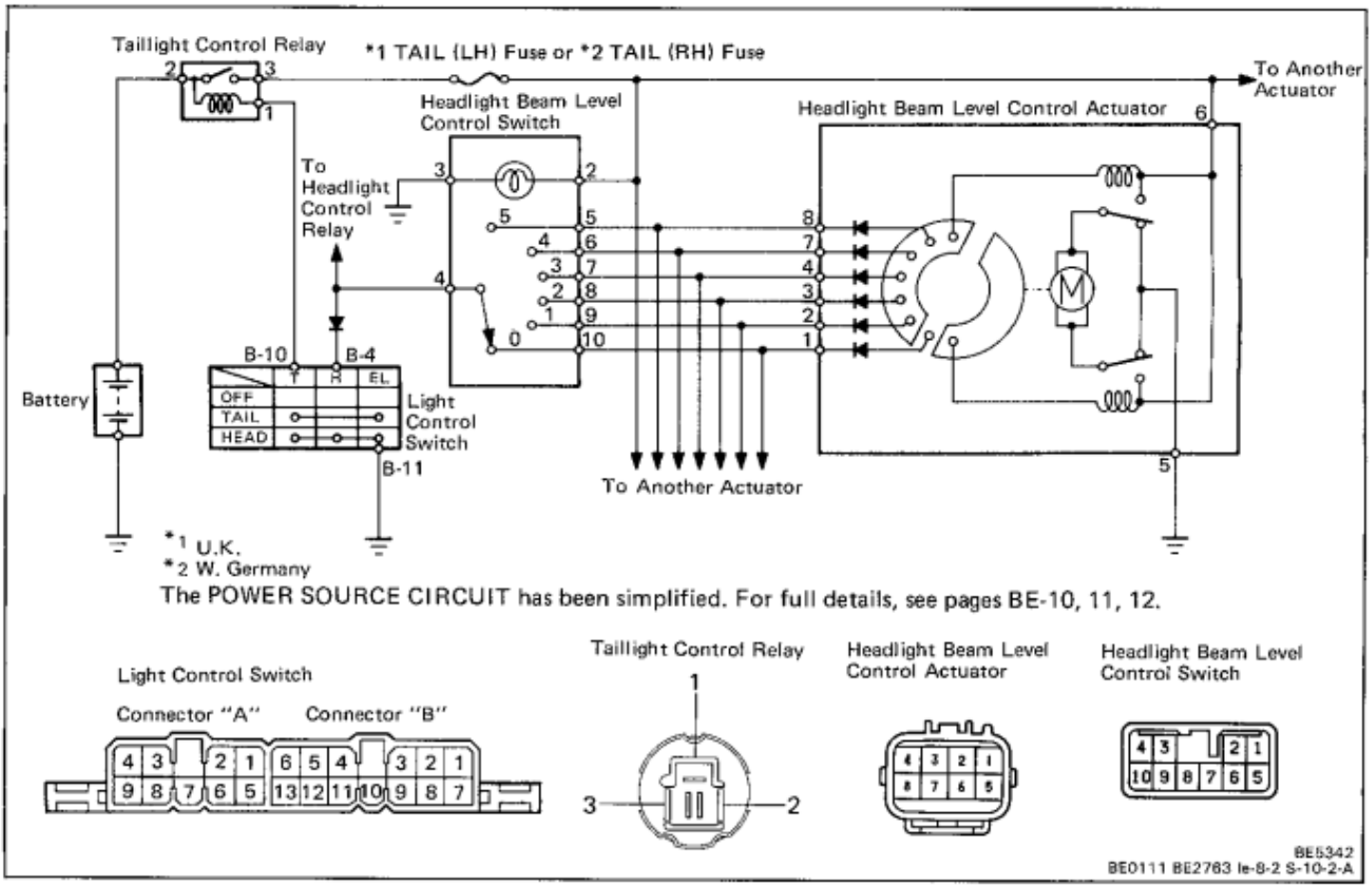

Part Adjustment

Adjustment of Light Aiming

Light-Duty Vehicles

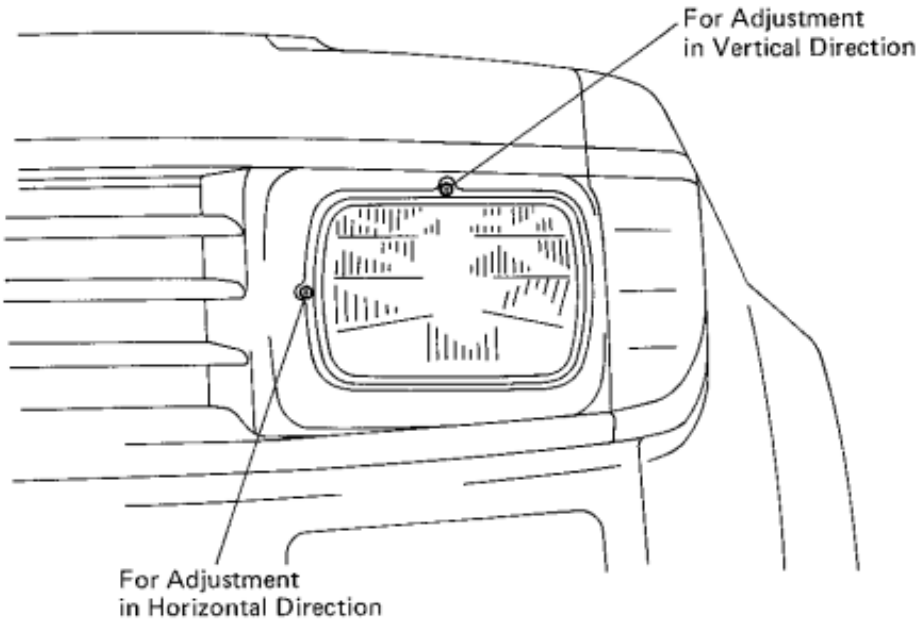

Heavy-Duty Vehicles

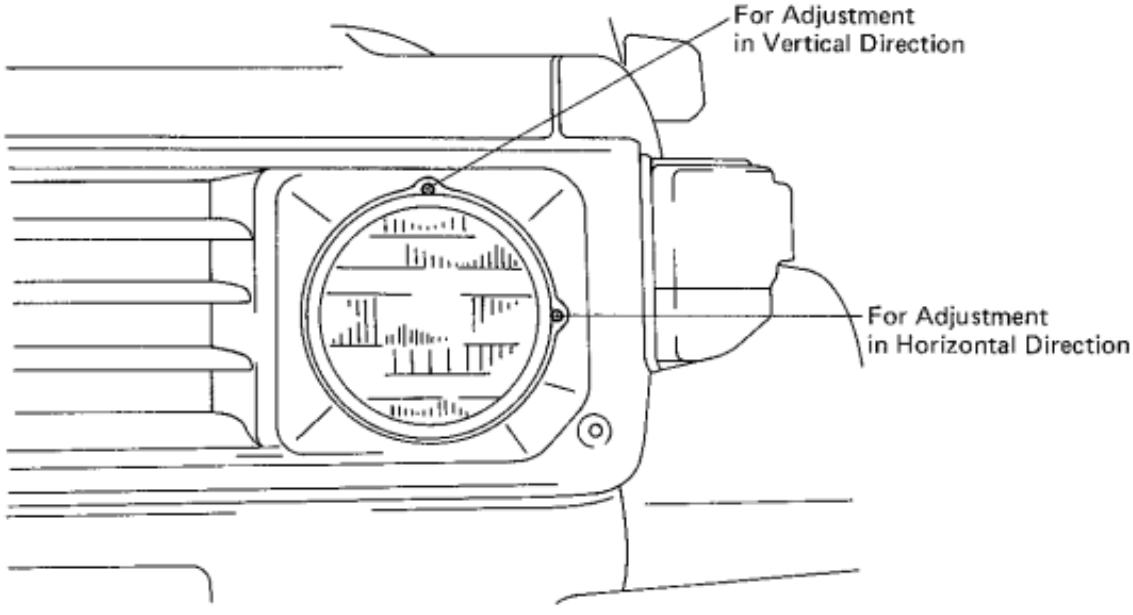

BE5343
BE5378

HINT: Before adjusting headlights equipped with a headlight beam level control system, first return the headlights to standard position by moving the control switch to "0" position.

Troubleshooting

Problem	Possible cause	Remedy	Page
Only one light comes ON	Light bulb burned out	Replace bulb	
	HEAD fuse blown	Replace fuse and check for short	BE-4
	Socket, wire or ground faulty		
Headlights do not light	Fusible link blown	Replace fusible link	
	HEAD fuse blown	Replace fuse and check for short	BE-4
	Headlight control relay faulty	Check relay	BE-29
	Light control/dimmer switch faulty	Check switch	BE-29
	Headlight dimmer relay faulty (Europe)	Check relay	BE-30
	Wiring or ground faulty	Repair as necessary	
High beam headlights or headlight flashers do not operate	Light control/dimmer switch faulty	Check switch	BE-29
	HEAD (UPR) fuse blown (Europe)	Replace fuse and check for short	BE-4
	Headlight dimmer relay faulty (Europe)	Check relay	BE-30
	Wiring faulty	Repair as necessary	
Tail, parking and license light do not light	Fusible link blown	Replace fusible link	
	TAIL fuse blown	Replace fuse and check for short	BE-4
	Taillight control relay faulty	Check relay	BE-30
	Light control switch faulty	Check switch	
	Wiring or ground faulty		
Stop lights do not light	STOP fuse blown	Replace fuse and check for short	BE-4
	Stop light switch faulty	Adjust or replace switch	
	Wiring or ground faulty	Replace as necessary	
Stop lights stay on	Stop light switch faulty	Adjust or replace switch	
Daytime running light system does not operate	DOME fuse blown	Replace fuse and check for short	BE-4
	ENGINE fuse blown		
	TAIL fuse blown		
	Taillight control relay faulty	Check relay	BE-30
	Headlight control relay faulty	Check relay	BE-29
	Daytime running light relay faulty	Check relay	BE-30
	Headlight dimmer relay faulty	Check relay	BE-30
	Ignition switch faulty	Check switch	BE-15
	Light control/dimmer switch faulty	Check switch	BE-29
	Wiring or ground faulty	Repair as necessary	
Front fog light system does not operate	TAIL fuse blown	Replace fuse and check for short	BE-4
	Taillight control relay faulty	Check relay	BE-30
	Front fog light switch faulty	Check switch	BE-31
	Light control switch faulty	Check switch	BE-29
	Wiring or ground faulty	Repair as necessary	
Rear fog light system does not operate	DOME fuse blown	Replace fuse and check for short	BE-4
	TAIL fuse blown (w/Daytime running light system)		
	Rear fog light relay faulty	Check relay	BE-31
	Taillight control relay faulty (w/ Daytime running light system)	Check relay	BE-30
	Daytime running light relay faulty (w/ Daytime running light system)	Check relay	BE-30
	Rear fog light switch faulty	Check switch	BE-31
	Light control switch faulty	Check switch	BE-29
	Wiring or ground faulty		

Troubleshooting (Cont'd)

Problem	Possible cause	Remedy	Page
Turn signal does not flash on one side	Turn signal switch faulty Wiring or ground faulty	Check switch Repair as necessary	BE-29
Turn signals do not operate	TURN fuse blown Turn signal flasher faulty Turn signal switch faulty Wiring or ground faulty	Replace fuse and check for short Check flasher Check switch Repair as necessary	BE-4 BE-32 BE-29
Hazard warning lights do not operate	HAZ-HORN fuse blown Turn signal flasher faulty Hazard warning switch faulty Wiring or ground faulty	Replace fuse and check for short Check flasher Check switch	BE-4 BE-32 BE-29
Lights-on warning system does not operate	ENGINE fuse blown CHARGE fuse blown TAIL (RH) fuse blown Taillight control relay faulty Light reminder relay faulty Ignition switch faulty Light control switch faulty Driver's door courtesy switch faulty Wiring or ground faulty	Replace fuse and check for short Check relay Check relay Check switch Check switch Check switch	BE-4 BE-30 BE-33 BE-15 BE-29 BE-33
Headlight beam level control system does not operate	TAIL fuse blown Taillight control relay faulty Headlight beam level control switch faulty Headlight beam level control actuator faulty	Replace fuse and check for short Check relay Check switch Check actuator	BE-4 BE-30 BE-34 BE-34

Parts Replacement

Components

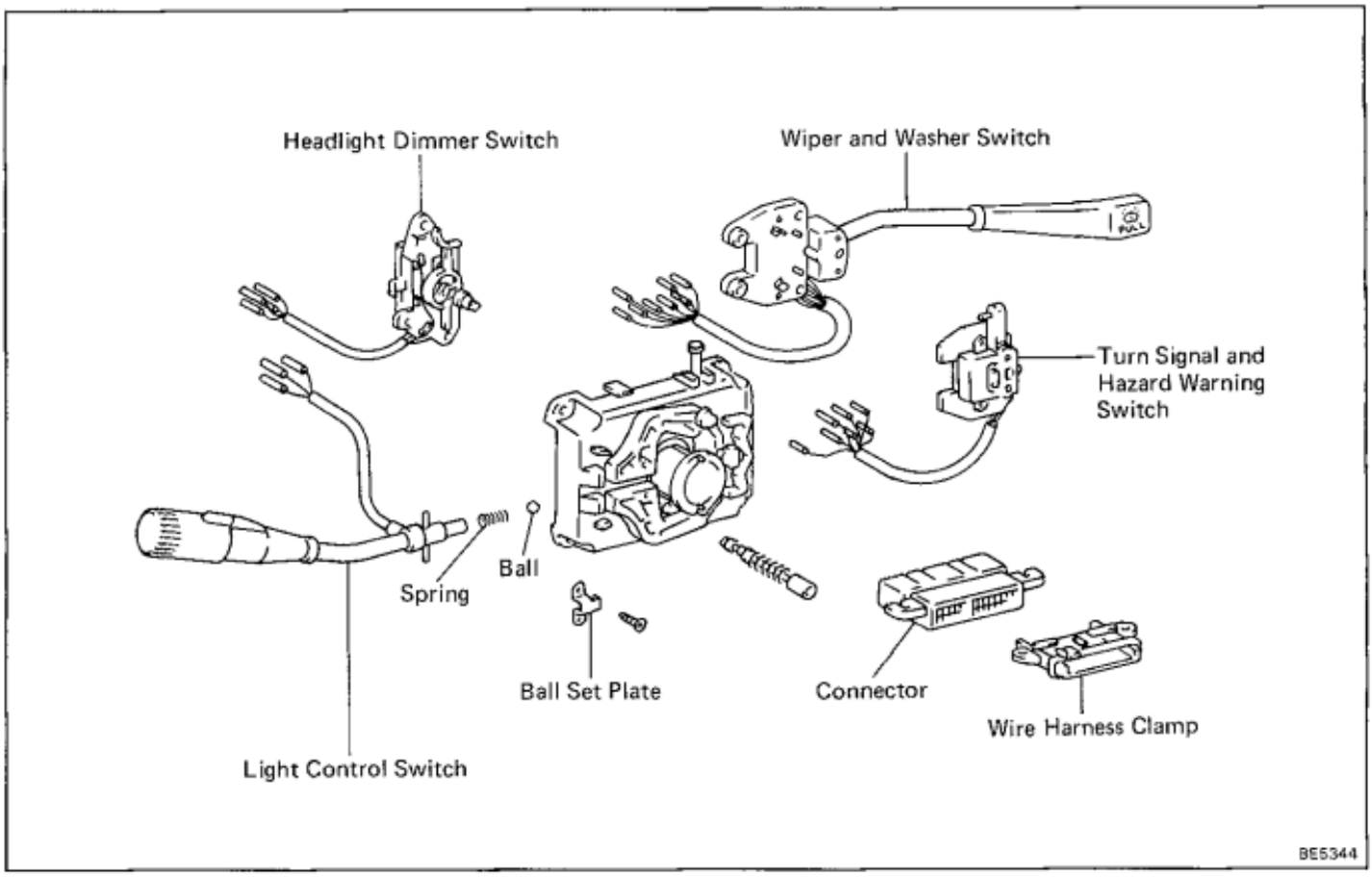

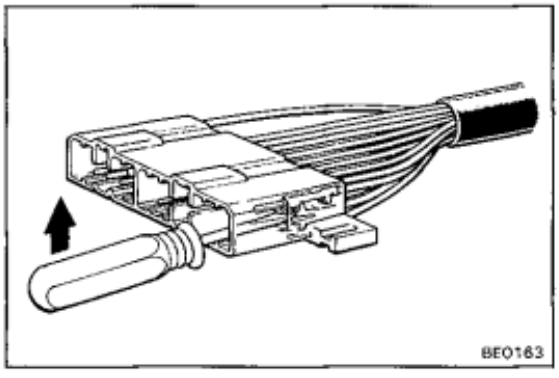

Disassembly of Combination Switch

1. **REMOVE TERMINALS FROM CONNECTOR**

   (a) From the open end, insert a miniature screwdriver between the locking lugs and terminal.

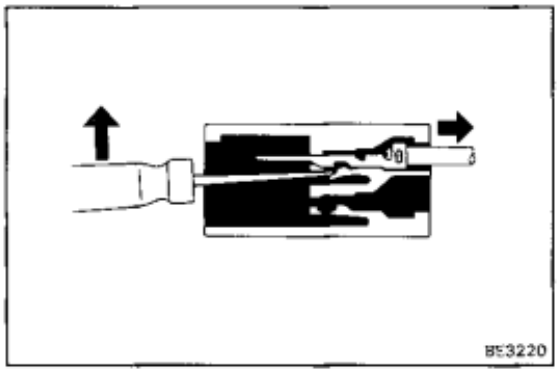

   (b) Pry down the locking lugs with the screwdriver and pull the terminal out from the rear.

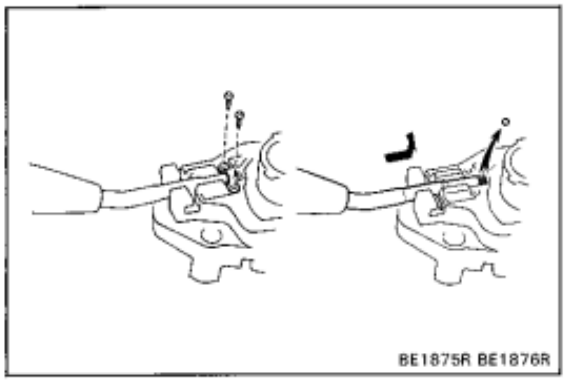

2. REMOVE LIGHT CONTROL SWITCH

(a) Remove two screws and the ball set plate from the switch body.

(b) Remove the ball and slide out the switch from the switch body with the spring.

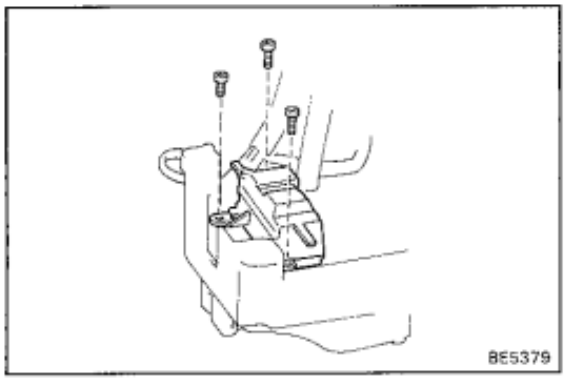

3. REMOVE HEADLIGHT DIMMER SWITCH

Remove three screws and the switch from the switch body.

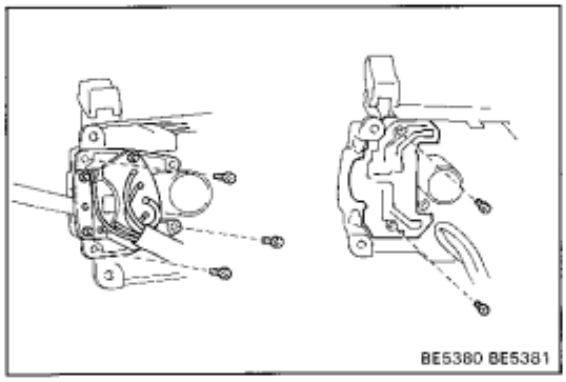

4. REMOVE WIPER AND WASHER SWITCH

Remove three screws and the switch from the switch body.

5. REMOVE TURN SIGNAL AND HAZARD WARNING SWITCH

Remove two screws and the switch from the switch body.

Assembly of Combination Switch

INSTALL PARTS OF COMBINATION SWITCH IN REVERSE SEQUENCE OF REMOVAL

HINT:

- After installing the switch to the switch body, insert that the switch operates in smoothly.

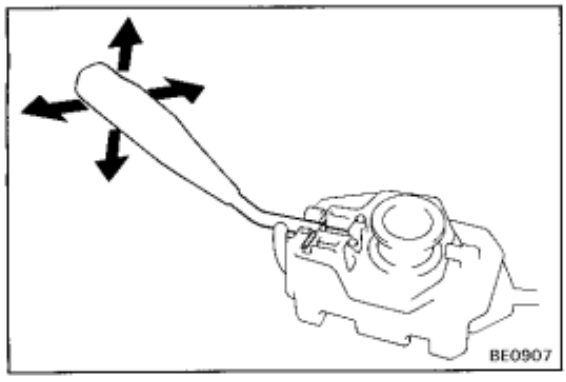

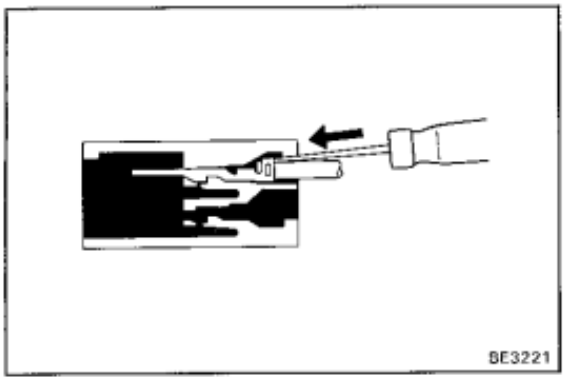

- Push in the terminal until it is securely locked in the connector lug.
- Pull on the wire to confirm that it is securely locked.

System Description

Daytime Running Light System

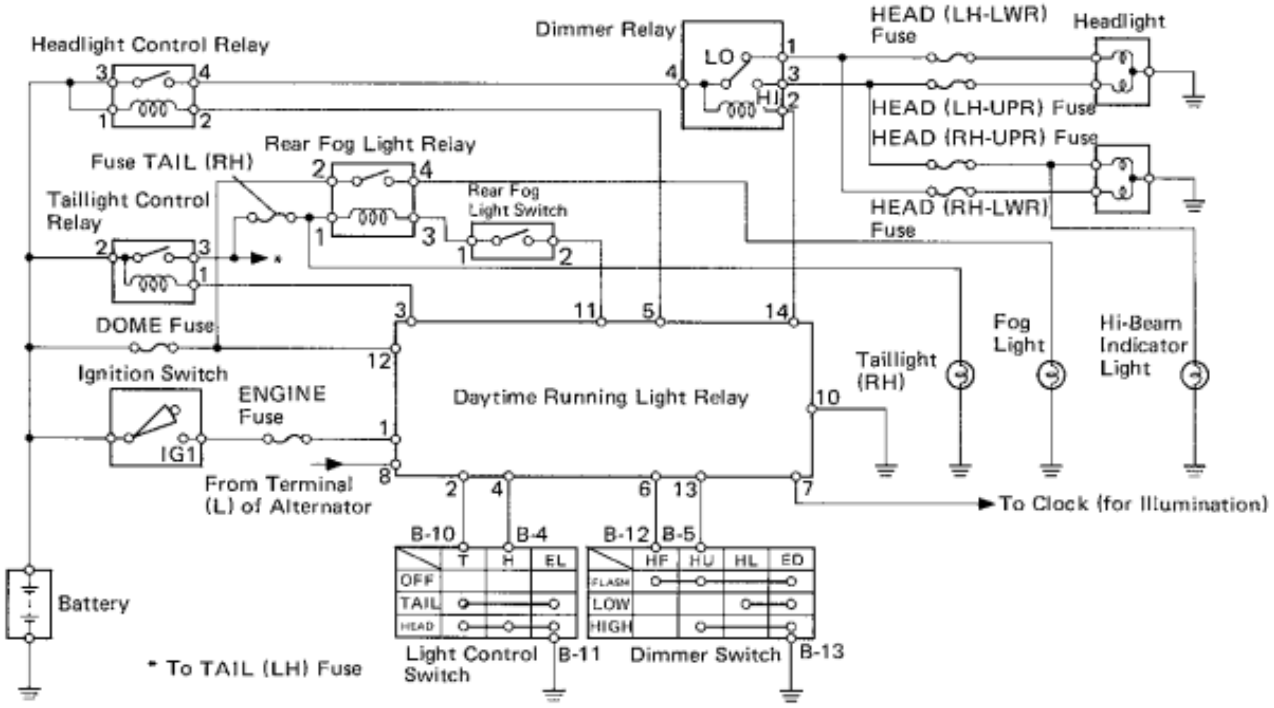

The POWER SOURCE CIRCUIT has been simplified. For full details, see pages BE-10, 11, 12.

BE5335

Standby Operation

- Current flows from the battery to terminal 12 of the Daytime Running Light Relay.
- When the engine is started, alternator voltage is applied from terminal L of the alternator to terminal 8 of the Daytime Running Light Relay.

Operation

1. **IGNITION SWITCH "ON" AND LIGHT CONTROL SWITCH "OFF"**
   When the switches are set, current flows from the battery to terminal 1 of the Daytime Running Light Relay. Also, because continuity is made between terminal 3 of the Daytime Running Light Relay and ground, and terminal 5 of the Daytime Running Light Relay and ground, the Taillight Control Relay and Headlight Control Relay are turned on. Then the taillights and headlights light up.
   HINT: Because terminal 14 of the Daytime Running Light Relay is not grounded at all times, the Headlight Dimmer Relay is off, so the headlights light up at low beam.
2. **IGNITION SWITCH "ON" AND LIGHT CONTROL SWITCH AT "TAIL"**
   When the switches are set, continuity is made between terminal 2 of the Daytime Running Light Relay and ground. Also, because continuity is made between terminal 3 of the Daytime Running Light Relay and ground at all times, the taillights light up.
   (Fog Light): Also, because continuity is made between terminal 11 of the Daytime Running Light Relay and ground, the Rear Fog Light Relay is turned on. Then the fog lights light up on standby.
3. **IGNITION SWITCH "ON" AND LIGHT CONTROL SWITCH AT "HEAD"**
   When the switches are set, continuity is made between terminal 4 of the Daytime Running Light Relay and ground, and terminal 2 of the Daytime Running Light Relay and ground. Also, because continuity is made between terminal 5 of the Daytime Running Light Relay and ground, and terminal 3 of the Daytime Running Light Relay and ground at all times, the taillights and headlights light up.
   HINT: When the Headlight Dimmer Switch is set to "HIGH", continuity is made between terminal 13 of the Daytime Running Light Relay and ground. Also, because continuity is made between terminal 14 of the Daytime Running Light Relay and ground, the Headlight Dimmer Relay is turned on. Then the headlights go on at high beam.
4. **HEADLIGHT DIMMER SWITCH AT "FLASH"**
   When the switch is set, continuity is made between terminal 6 of the Daytime Running Light Relay and ground, and terminal 13 of the Daytime Running Light Relay and ground. Also, because the continuity is made between terminal 5 of the Daytime Running Light Relay and ground, and terminal 14 of the Daytime Running Light Relay and ground, the headlights flash.

Headlight Beam Level Control System

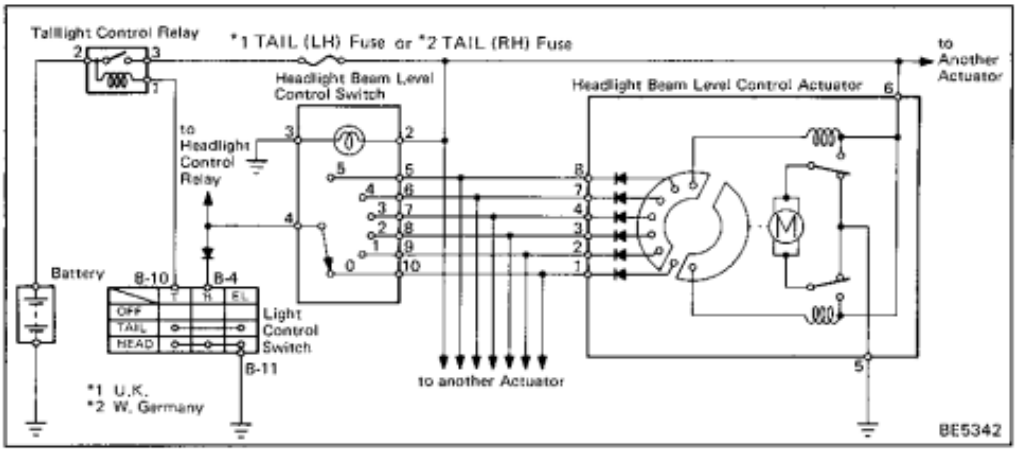

- Continuity always exists between terminal 5 of the Headlight Beam Level Control Actuator (hereafter called "Actuator") and the ground.
- When the Light Control Switch is turned to HEAD position, continuity is made between terminal 4 of the Headlight Beam Level Control Switch (hereafter called "Level Switch") and the ground through terminals B-4 and B-11 of the Light Control Switch. Also, continuity is made between terminal 1 of the Taillight Control Relay and the ground through terminals B-10 and B-11 of the Light Control Switch, the Taillight Control Relay is turned on, then current flows from the battery to terminal 6 of the Actuator.

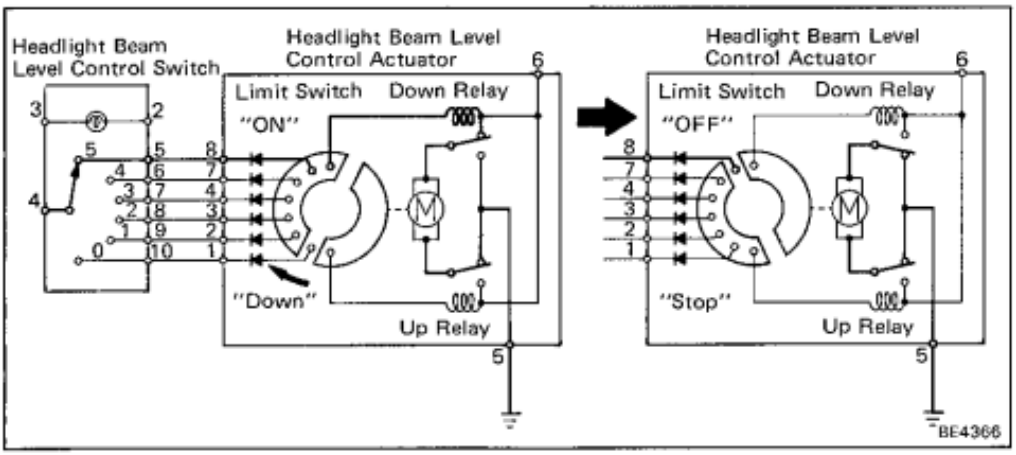

LEVEL SWITCH IN "5" POSITION

When the switch is set, Current flows from terminal 6 of Actuator → terminal 8 of the Actuator → terminal 5 of the Level Switch → ground, and the Down Relay is activated. Then current flows from terminal 6 of the Actuator → Down Relay → Motor → Up Relay → terminal 5 of the Actuator → ground, and the Motor operates to lower the headlight. When the headlights are lowered, the Limit Switch operates, so that continuity between terminals 6 and 8 of the Actuator is broken. As a result, the Down Relay is open and the headlights stay in level "5" position.

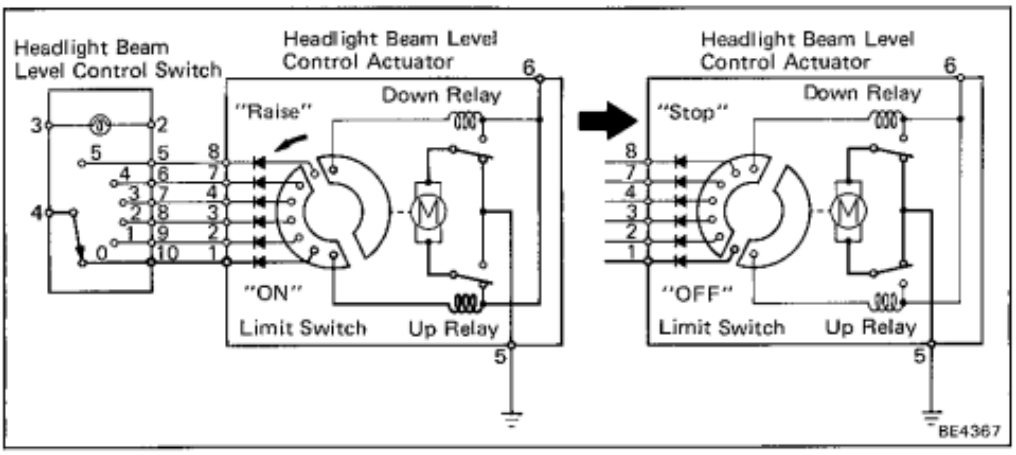

LEVEL SWITCH IN "0" POSITION

When the switch is set, current flows from terminal 6 of Actuator → terminal 1 of the Actuator → terminal 10 of the Level Switch → ground, and the Up Relay is activated. Then current flows from terminal 6 of the Actuator → Up Relay → Motor → Down Relay → terminal 5 of the Actuator → ground, and the motor operates to raise the headlight. When the headlights are raised, the Limit switch operates, so that continuity between terminals 6 and 1 of the Actuator is broken. As a result, the Up Relay is open and the headlights stay in level "0" position.

Reference: LHD Vehicles

Light Control, Headlight Dimmer and Turn Signal Switch

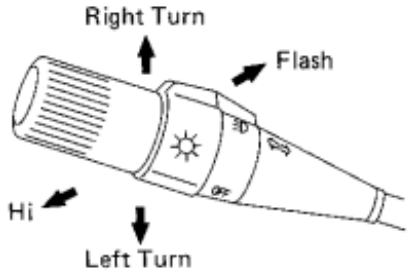

Hazard Warning Switch

Type A Type B

Connector "A" Connector "B"

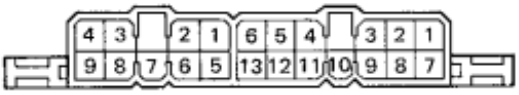

Reference: For RHD vehicles, the switch is always symmetrically opposite to LHD vehicles.

BE5345
BE5346
BE0111

Parts Inspection

Headlight and Taillight System

1. **INSPECT COMBINATION SWITCH**
(Light Control Switch/Continuity)

Terminal (Color) / Switch position	B-4 (R)	B-10 (W)	B-11 (W)
OFF			
TAIL		○	○
HEAD	○	○	○

(Headlight Dimmer Switch/Continuity)

Terminal (Color) / Switch position	B-5 (R-Y)	B-6 (R-G)	B-12 (R-W)	B-13 (W-B)
Flash	○		○	○
Low beam		○		○
High beam	○			○

(Turn Signal Switch/Continuity)

Terminal (Color) / Switch position	B-2 (G-L)	B-3 (G-W)	B-7 (G)	B-8 (G-Y)	B-9 (G-B)
Left turn	○	○	○		○
Neutral	○		○		
Right turn	○	○	○	○	

(Hazard Warning Switch/Continuity)

Terminal (Color) / Switch position	B-1 (G-O)	B-2 (G-L)	B-3 (G-W)	B-7 (G)	B-8 (G-Y)	B-9 (G-B)
OFF		○		○		
ON	○		○			
			○		○	○

If continuity is not as specified, replace the switch.

2. **INSPECT RELAYS**
(Headlight Control Relay/Continuity)

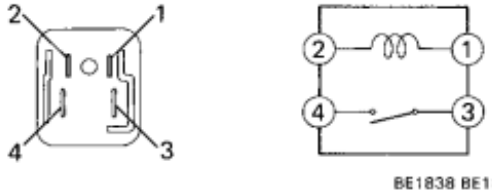

BE1838 BE1840

Terminal / Condition	1	2	3	4
Constant	○	○		
Apply battery voltage to terminals 1 and 2.			○	○

(Taillight Control Relay/Continuity)

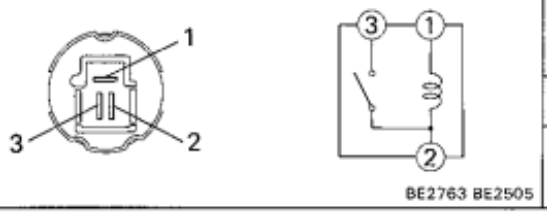

Terminal / Condition	1	2	3
Constant	○—⌇⌇⌇—○		
Apply battery voltage to terminals 1 and 2.		○——○	

(Headlight Dimmer Relay/Continuity)

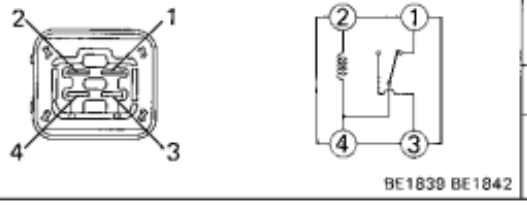

Terminal / Condition	1	2	3	4
Constant	○——○	○—⌇⌇⌇—○		○
Apply battery voltage to terminals 2 and 4.		○——○	○	

If continuity is not as specified, replace the relay.

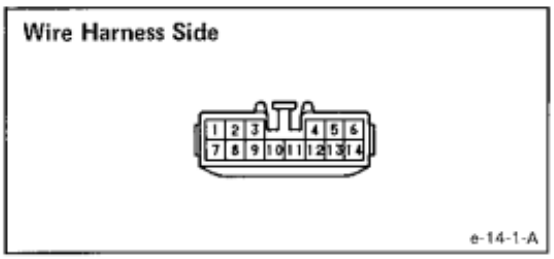

Daytime Running Light System

Inspect Daytime Running Light Relay

(Relay Circuit)

Disconnect the connector from the relay and inspect the connector on the wire harness side as shown in the chart.

Check for	Tester connection	Condition		Specified value
Continuity	2 — Ground	Light control switch position	OFF	No continuity
			TAIL or HEAD	Continuity
	4 — Ground	Light control switch position	OFF or TAIL	No continuity
			HEAD	Continuity
	6 — Ground	Headlight dimmer switch position	Low beam or High beam	No continuity
			Flash	Continuity
	7 — Ground 10 — Ground	Constant		Continuity
	13 — Ground	Headlight dimmer switch position	Low beam	No continuity
			High beam or Flash	Continuity
Voltage	1 — Ground	Ignition switch position	LOCK or ACC	No voltage
			ON	Battery voltage
	3 — Ground 5 — Ground	Constant		Battery voltage
	8 — Ground	Engine	Stop	No voltage
			Running	Battery voltage
	11 — Ground	Constant		No voltage
		Ground terminal 3		Battery voltage
	12 — Ground	Constant		Battery voltage
	14 — Ground	Constant		No voltage
		Ground terminal 5		Battery voltage

If circuit is as specified, inspect relay operation on next page.

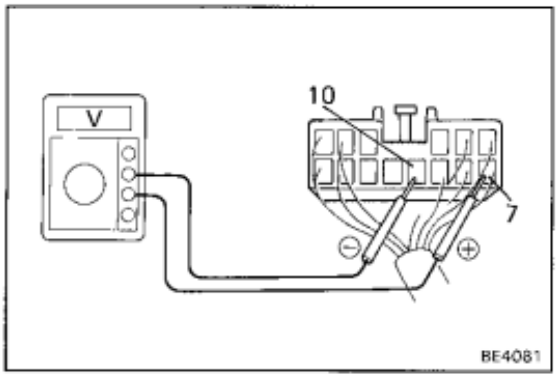

(Relay Operation)

(a) Connect the positive (+) lead from the voltmeter to terminal 7 and negative (−) lead to terminal 10.

(b) Check that there is battery voltage with light control switch is turned on.

If operation is not as specified, replace the relay.

Front Fog Light System

INSPECT FRONT FOG LIGHT SWITCH (Continuity)

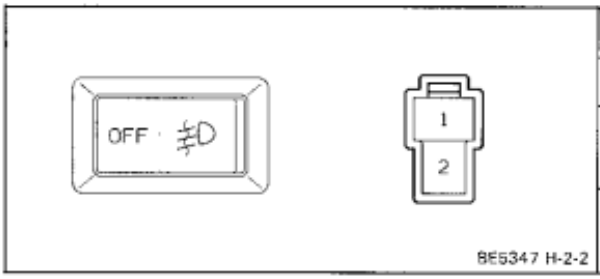

Terminal / Switch position	1	2
OFF		
ON	○—	—○

If continuity is not as specified, replace the switch.

Rear Fog Light System

1. INSPECT REAR FOG LIGHT SWITCH (Continuity)

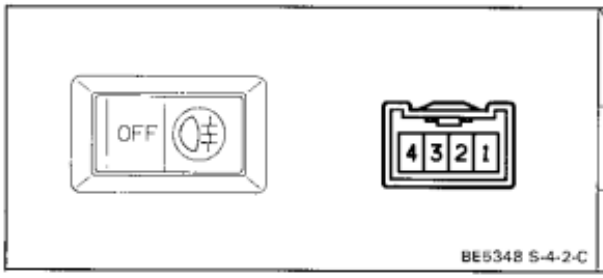

Terminal / Switch position	1	2	3	4
OFF			○—⊕—	—○
ON	○—	—○	○—⊕—	—○

If continuity is not as specified, replace the switch.

2. INSPECT REAR FOG LIGHT RELAY (Continuity)

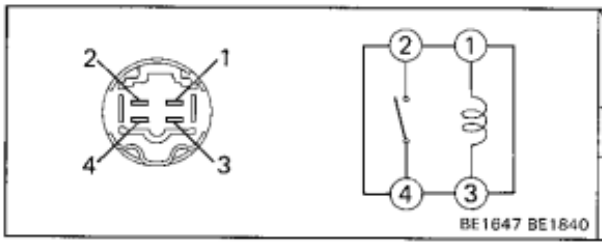

Terminal / Condition	1	2	3	4
Constant	○—	—⊕—	—○	
Apply battery voltage to terminals 1 and 3.		○—		—○

If continuity is not as specified, replace the relay.

Turn Signal and Hazard Warning System

1. **INSPECT SWITCHS**

(Turn Signal Switch/Continuity)

See Combination Switch on page BE-29.

(Hazard Warning Switch/Continuity)

See Combination Switch on page BE-29.

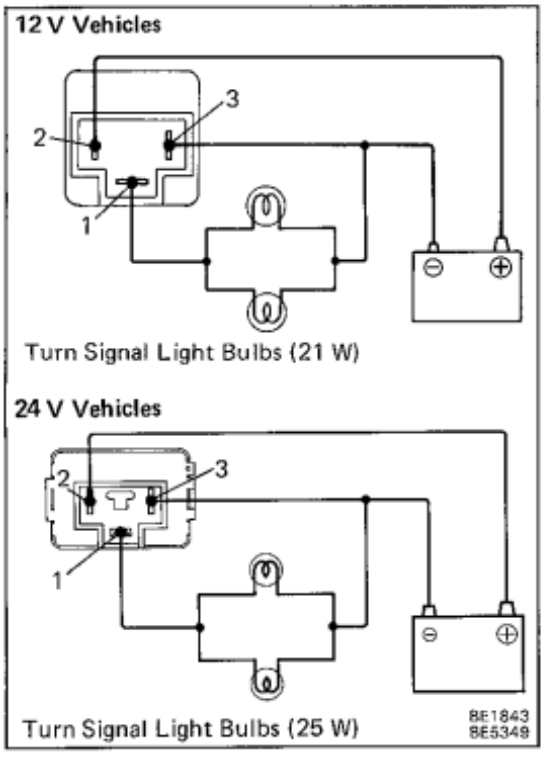

2. **INSPECT TURN SIGNAL FLASHER (Operation)**

HINT: The number in brackets ( ) applies to 24V vehicles.

(a) Connect the positive (+) lead from the battery to terminal 2 and the negative (−) lead to terminal 3.

(b) Connect the two turn signal light bulbs parallel to each other to terminals 1 and 3, check that the bulbs flash.

HINT: The turn signal lights should flash 60 to 120 times per minute.

If one of the front or rear turn signal bulbs has an open circuit, flash rate will be more than 140 (120) times per minute.

If operation is not as specified, replace the flasher.

3. **INSPECT RED HAZARD INDICATOR RELAY (Continuity)**

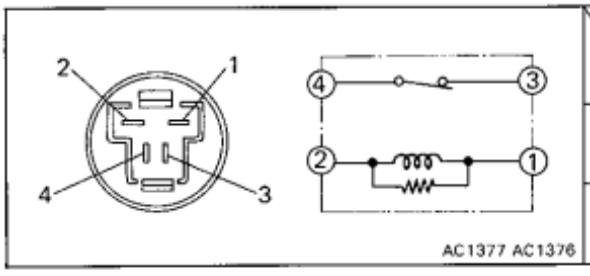

Terminal / Condition	1	2	3	4
Constant	○—⁓⁓—○		○——	——○
Apply battery voltage to terminals 1 and 2.			No continuity	

If continuity is not as specified, replace the switch.

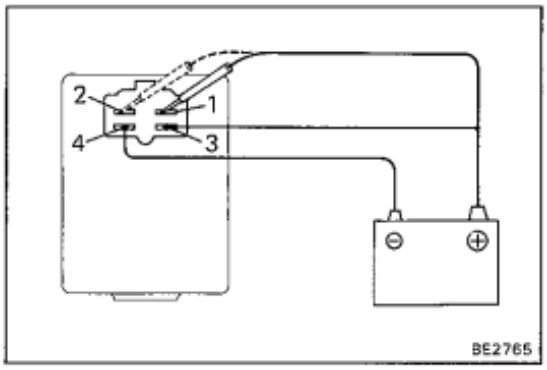

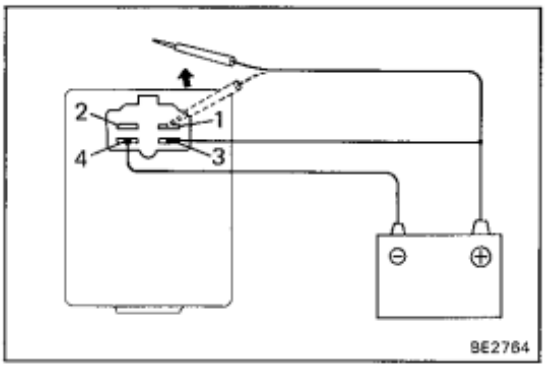

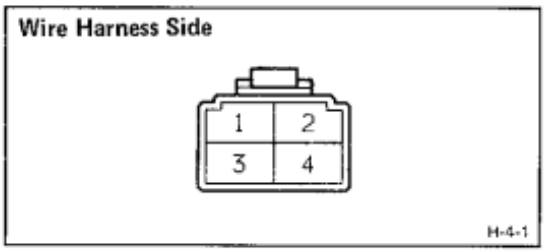

Lights-On Warning System

1. INSPECT LIGHT REMAINDER RELAY
(Operation)

(a) Connect the positive (+) lead from the battery to terminal 3 and the negative (−) lead to terminal 4.

(b) Check that the buzzer does not sound when connected terminal 1 or 2 from the positive (+) lead.

(c) Check that the buzzer sounds when disconnecting terminal 1 or 2 from the positive (+) lead.

If operation is not as specified, replace the relay.

(Relay Circuit)

Disconnect the connector from the relay and inspect the connector on the wire harness side as shown in the chart.

Check for	Tester connection	Condition		Specified value
Continuity	4 — Ground	Driver's door position	Closed (Courtesy switch OFF)	No continuity
			Opened (Courtesy switch ON)	Continuity
Voltage	1 — Ground	Ignition switch position	LOCK or ACC	No voltage
			ON	Battery voltage
	2 — Ground	Engine	Stop	No voltage
			Running	Battery voltage
	3 — Ground	Light Control Switch	OFF	No voltage
			TAIL or HEAD	Battery voltage

If circuit is as specified, replace the relay.

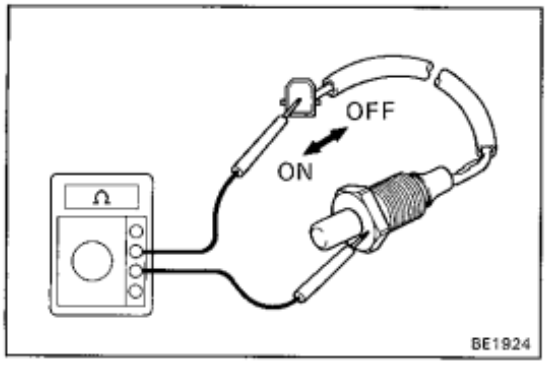

2. INSPECT DRIVER'S DOOR COURTESY SWITCH
(w/o Open Door Warning System)

(a) Check that there is continuity between terminal and the switch body with the switch ON (switch pin released).

(b) Check that there is no continuity between terminal and the switch body with the switch OFF (switch pin pushed in).

If operation is not as specified, replace the switch.

(w/ Open Door Warning System)

See Open Door Warning System on page BE-65.

Headlight Beam Level Control System

1. INSPECT SWITCH (Continuity)

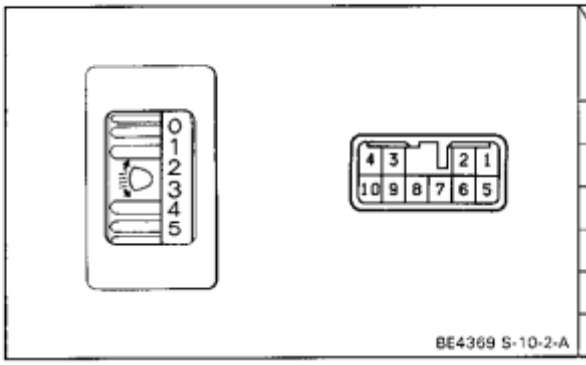

Terminal / Switch position	4	5	6	7	8	9	10	Illumination 2	Illumination 3
"0"	○						○		
"1"	○					○			
"2"	○				○				
"3"	○			○					
"4"	○		○						
"5"	○	○							

If continuity is not as specified, replace the switch.

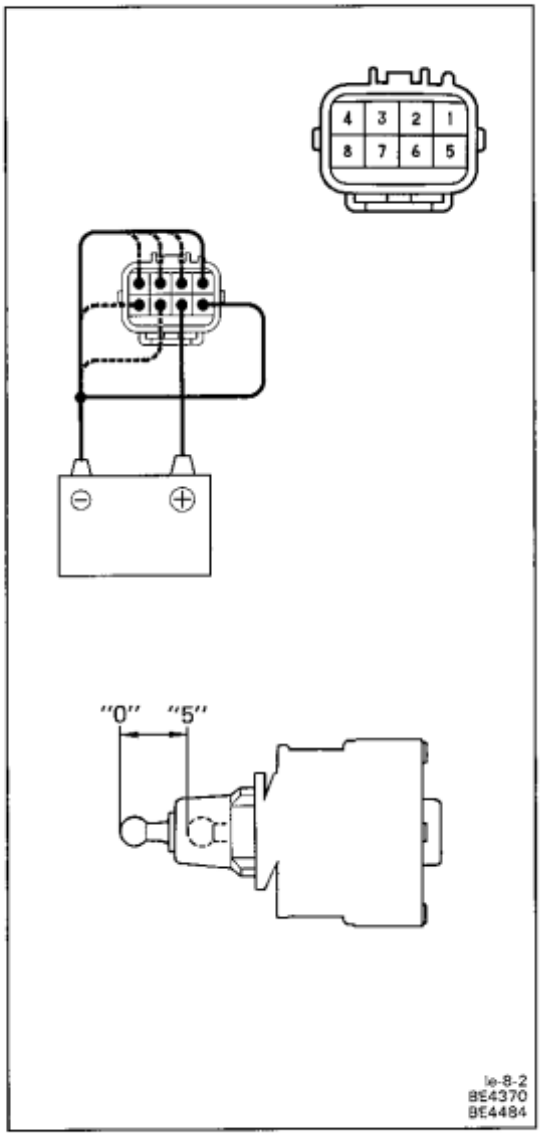

2. INSPECT ACTUATOR

(a) Connect the positive (+) lead from the battery to terminal 6 and the negative (—) lead to terminal 5.

(b) Ground each terminal and check that each mode operates as shown in the chart and illustration.

Terminal	Headlight Beam Level
1 — ground	"0"
2 — ground	"1"
3 — ground	"2"
4 — ground	"3"
7 — ground	"4"
8 — ground	"5"

If operation is not as specified, replace the actuator.

HEADLIGHT CLEANER SYSTEM

Parts Location

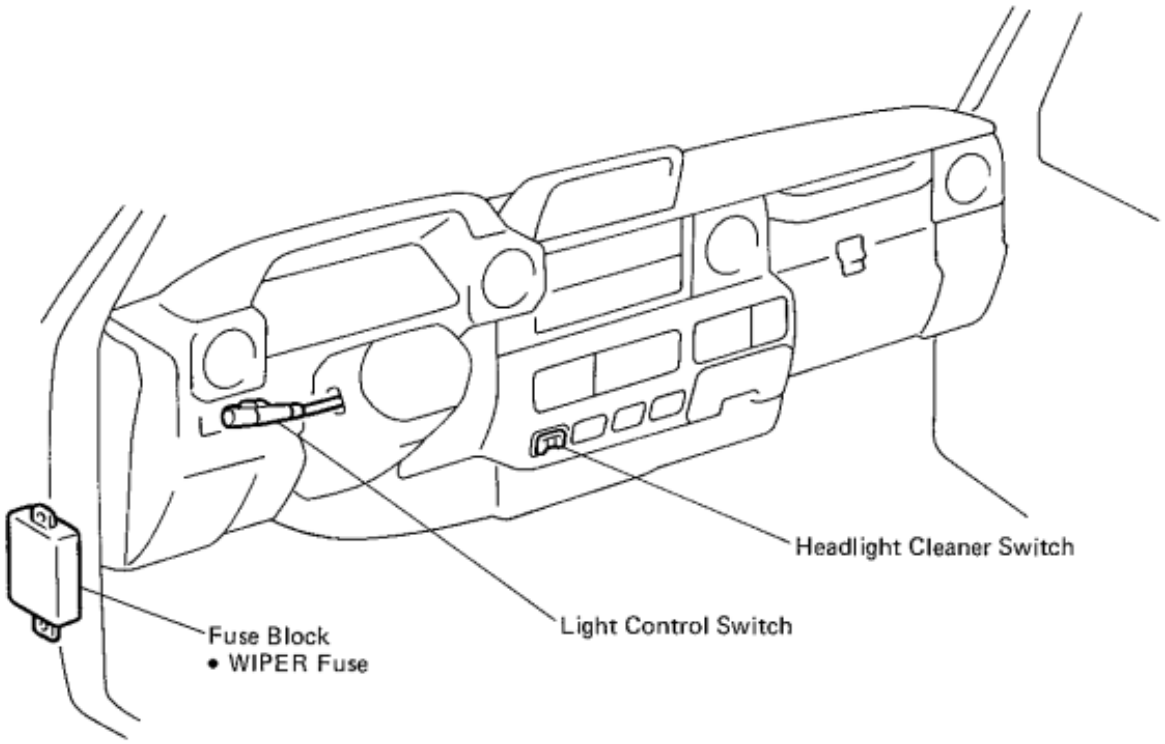

Heavy-Duty

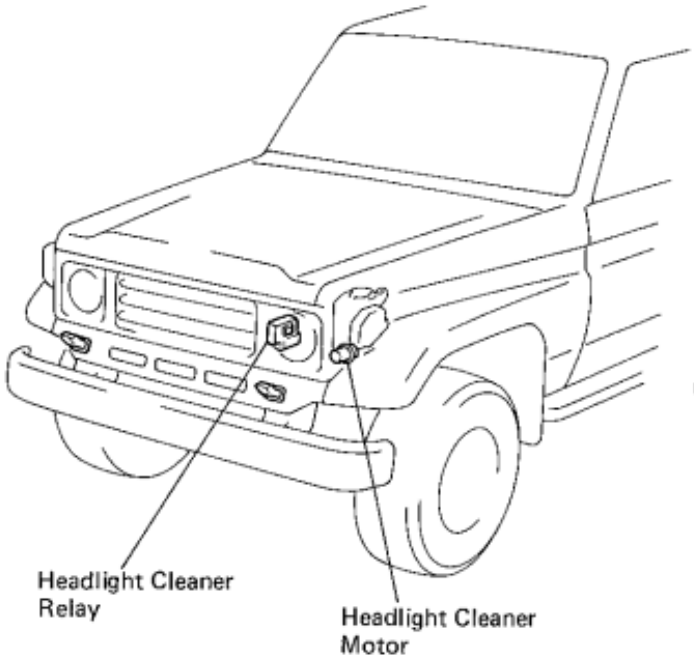

Light-Duty

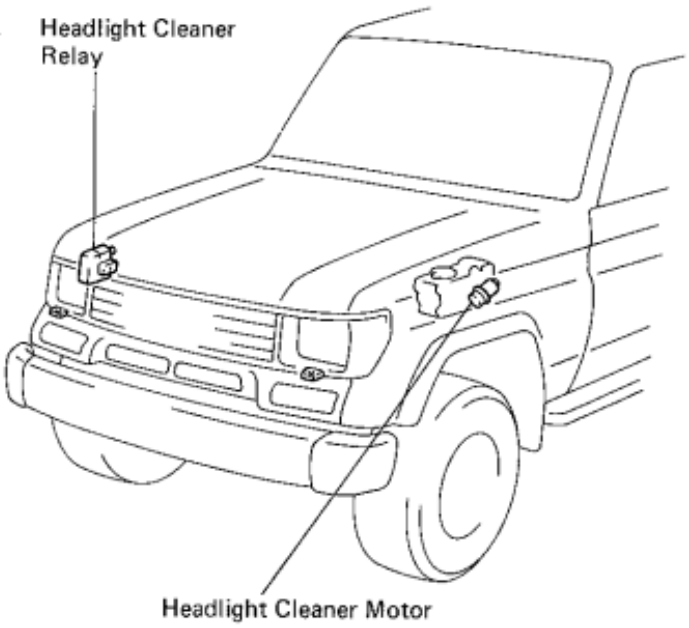

BE5297
BE5299 BE5302

Wiring and Connector Diagrams

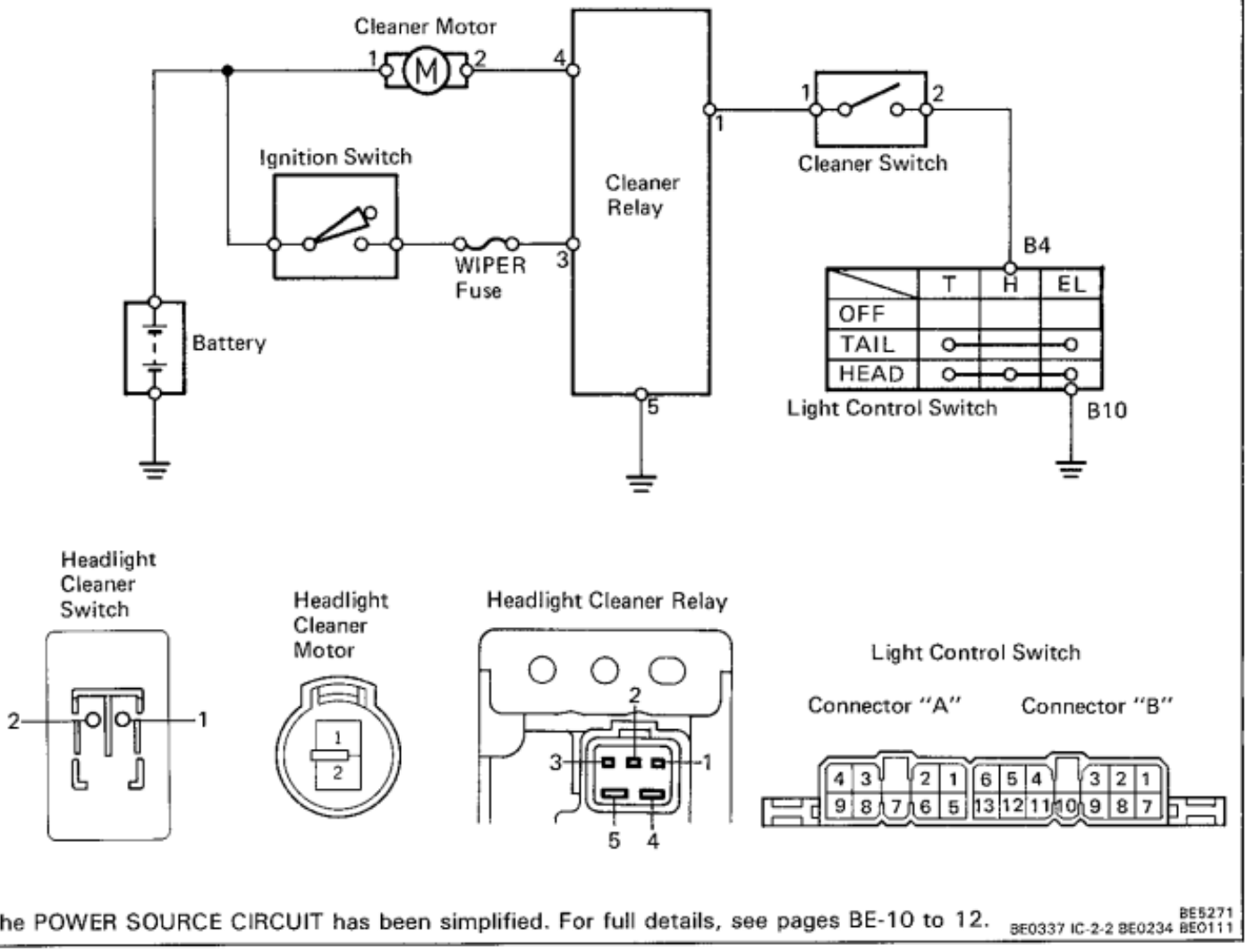

The POWER SOURCE CIRCUIT has been simplified. For full details, see pages BE-10 to 12.

BE5271
BE0337 IC-2-2 BE0234 BE0111

Troubleshooting

Problem	Possible cause	Remedy	Page
Headlight cleaner do not operate	WIPER fuse blown	Replace fuse and check for short	BE-4
	Cleaner hose or nozzle clogged	Repair as necessary	
	Cleaner motor faulty	Check motor	BE-37
	Cleaner switch faulty	Check switch	BE-37
	Cleaner relay	Check relay	BE-37
	Wiring or ground faulty	Repair as necessary	

Parts Inspection

1. INSPECT SWITCH (Continuity)

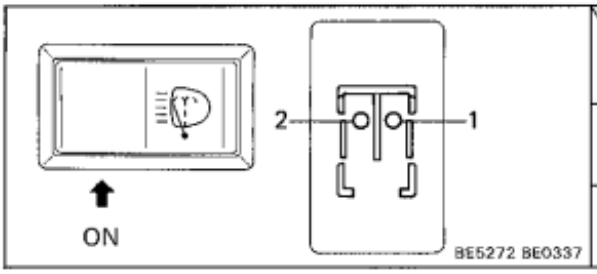

Terminal / Switch position	1	2
OFF		
ON	○	○

If continuity is not as specified, replace the switch.

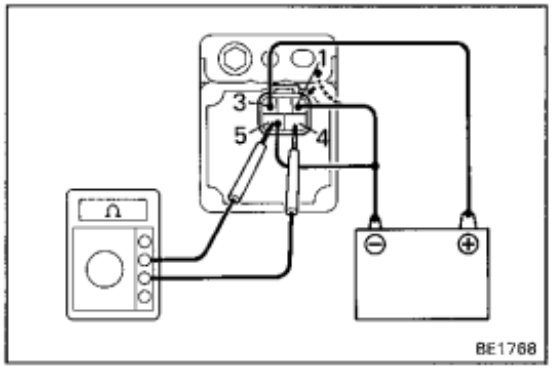

2. INSPECT HEADLIGHT CLEANER RELAY

(a) Check that there is no continuity between terminals 4 and 5.

(b) Connect the positive (+) lead from the battery to terminal 3 and the negative (−) lead to terminal 5.

(c) Connect the negative (−) lead from the battery to terminal 1, check that there is continuity between terminals 4 and 5 for 0.30 — 0.42 sec., then there is no continuity.

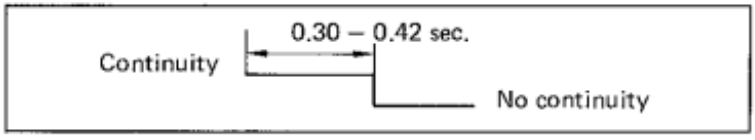

If operation is not as specified, replace the relay.

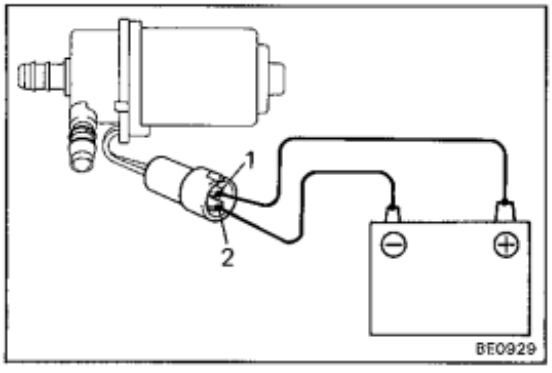

3. INSPECT HEADLIGHT CLEANER MOTOR

Connect the positive (+) lead from the battery to terminal 1 and the negative (−) lead to terminal 2, check that the motor operates.

NOTICE: These test must be performed quickly (within 3 — 5 seconds) to prevent the coil from burning out.

If operation is not as specified, replace the motor.

WIPER AND WASHER SYSTEM

Parts Location

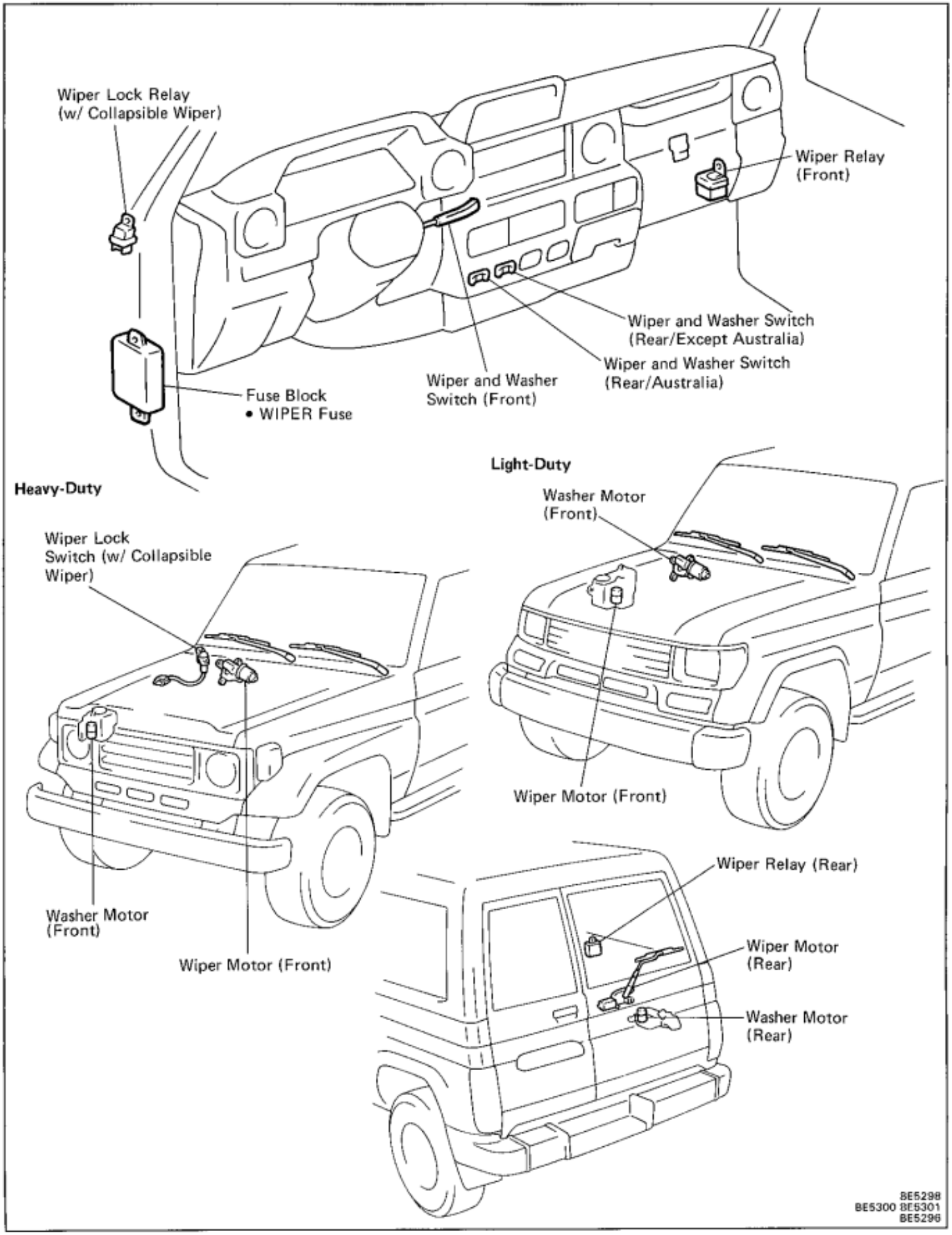

Wiring and Connector Diagrams

(Front: Mist Type)

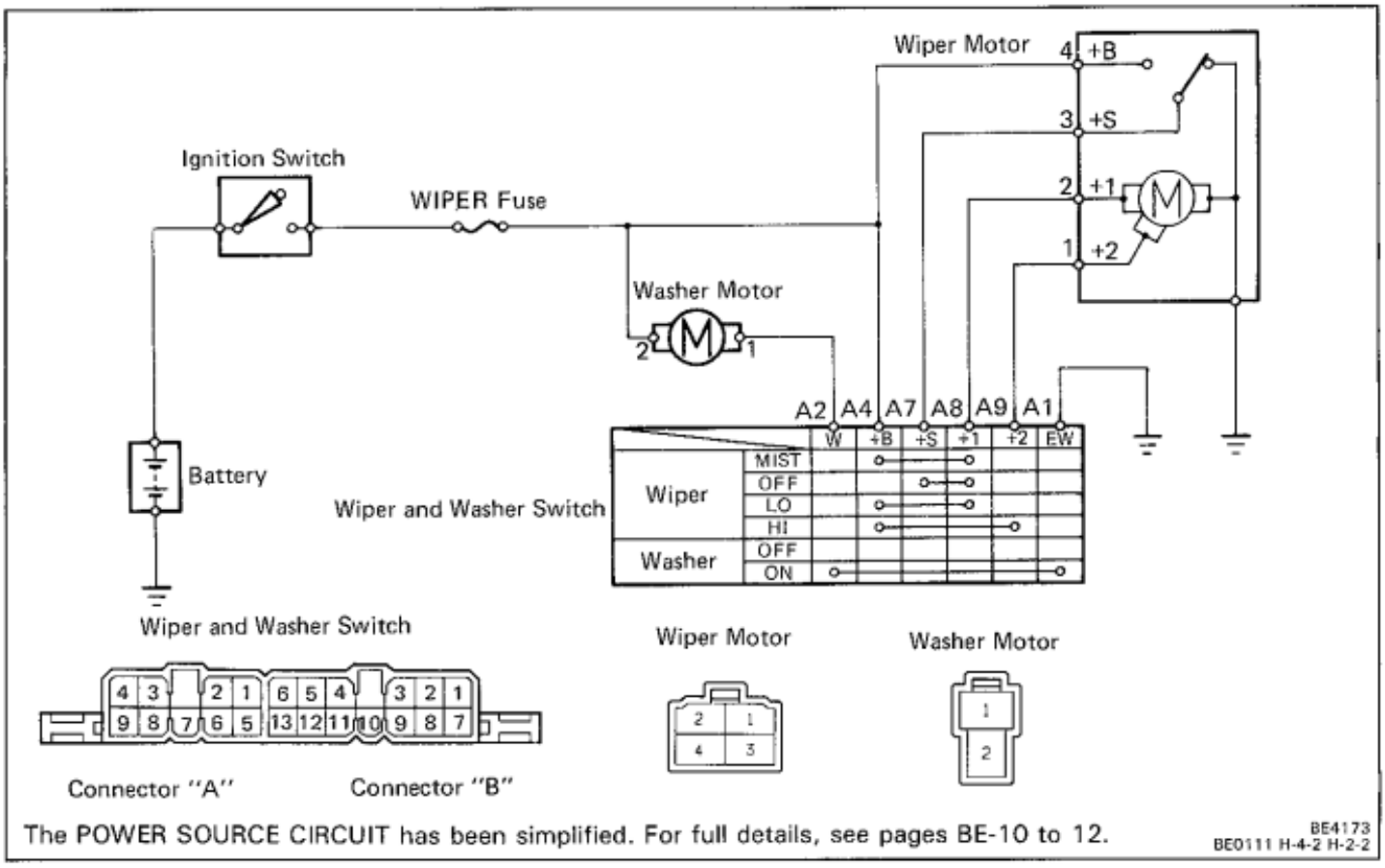

The POWER SOURCE CIRCUIT has been simplified. For full details, see pages BE-10 to 12.

BE4173
BE0111 H-4-2 H-2-2

(Front: Intermittent Type w/ Washer Linked)

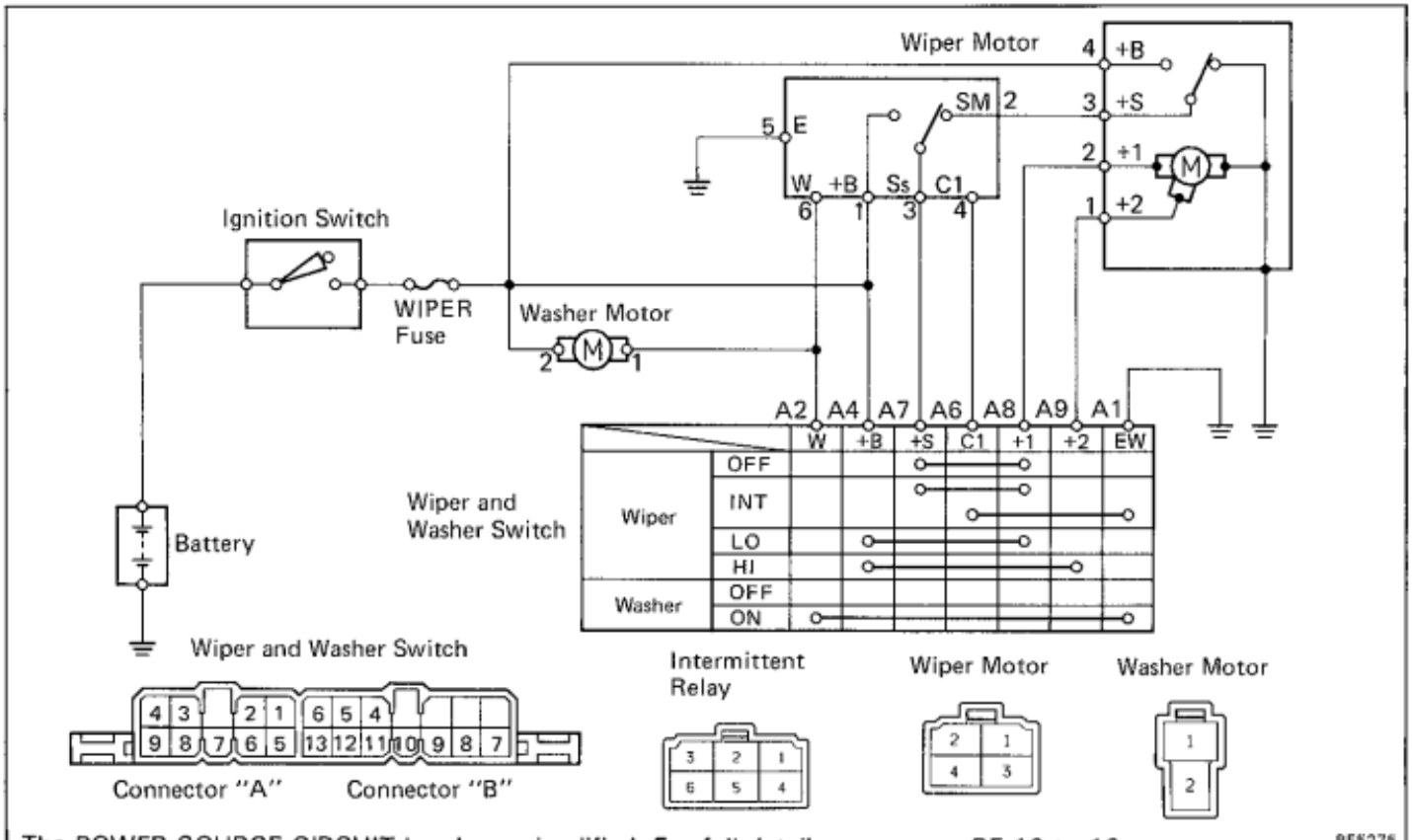

The POWER SOURCE CIRCUIT has been simplified. For full details, see pages BE-10 to 12.

BE5275
BE0111 H-6-2 H-4-2 H-2-2

(Front: Intermittent w/o Washer Linked)

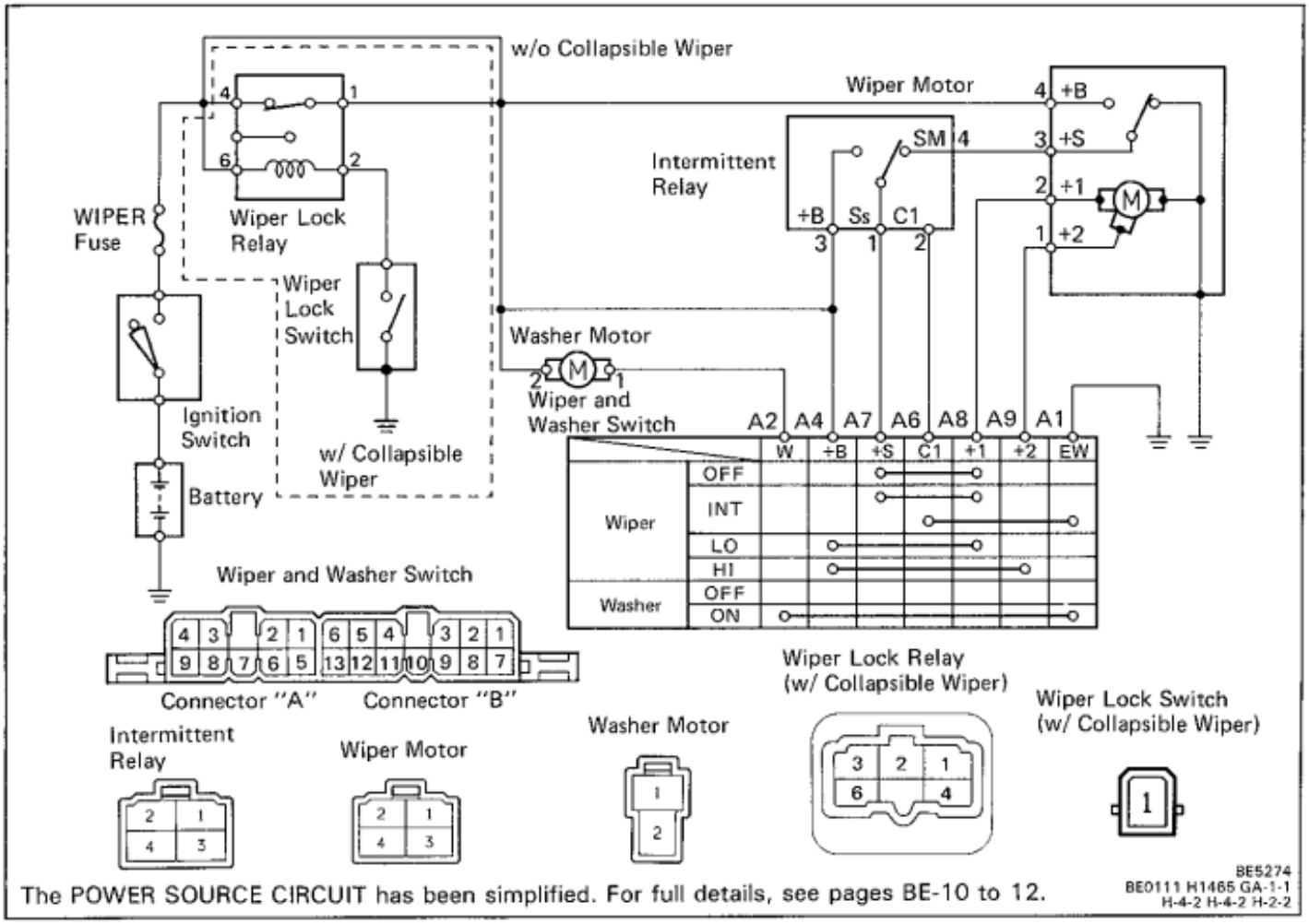

The POWER SOURCE CIRCUIT has been simplified. For full details, see pages BE-10 to 12.

(Rear)

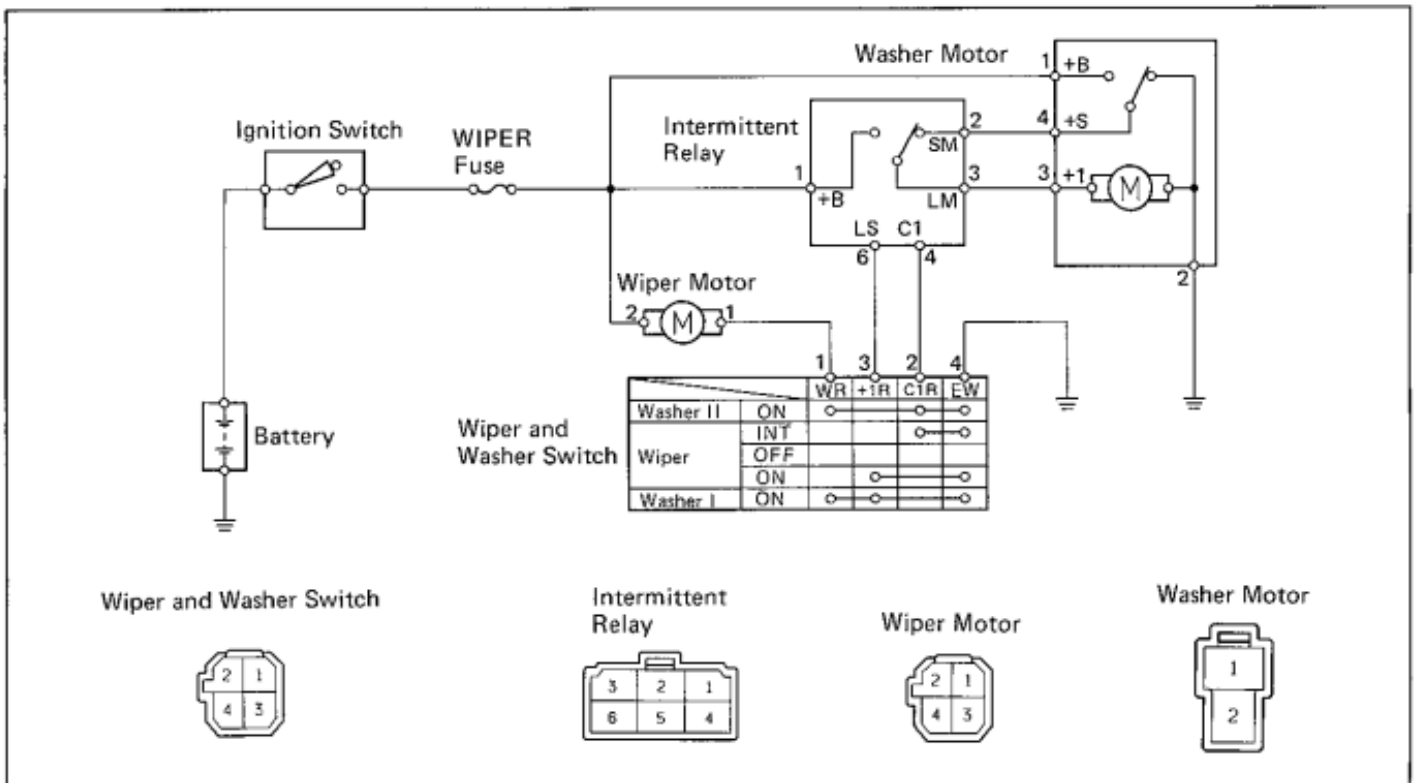

The POWER SOURCE CIRCUIT has been simplified. For full details, see pages BE-10 to 12.

Troubleshooting

Problem	Possible cause	Remedy	Page	
			Front	Rear
Wiper do not operate or return to off position	WIPER fuse blown	Replace fuse and check for short	BE-4	BE-4
	Wiper motor faulty	Check motor	BE-45	BE-45
	Wiper switch faulty	Check switch	BE-41	BE-42
	Wiring or ground faulty	Repair as necessary		
Wiper do not operate in Mist position	Wiper switch faulty	Check switch	BE-41	BE-42
	Wiper motor faulty	Check motor	BE-45	BE-45
	Wiring or ground faulty	Repair as necessary		—
Wiper do not operate in Intermittent (INT) position	Wiper relay faulty	Check relay	BE-42	BE-44
	Wiper switch faulty	Check switch	BE-41	BE-42
	Wiper motor faulty	Check motor	BE-45	BE-45
	Wiring or ground faulty	Repair as necessary		
Washer do not operate	Washer hose or nozzle clogged	Repair as necessary		
	Washer motor faulty	Check motor	BE-46	BE-46
	Washer switch faulty	Check switch	BE-41	BE-42
	Wiring or ground faulty	Repair as necessary		

Reference: LHD Vehicles

w/ Mist Wiper

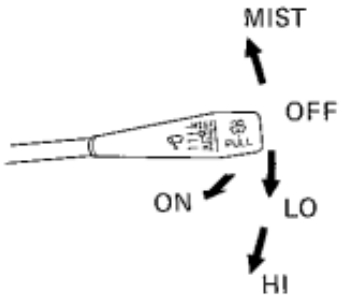

w/ Intermittent Wiper

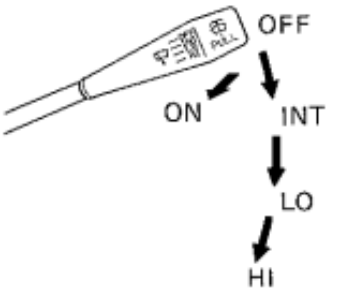

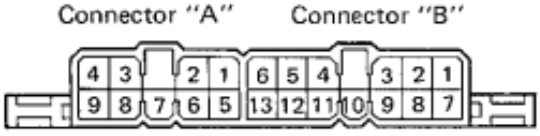

Reference: For RHD vehicles, the switches are always symmetrically opposite to those of LHD vehicles.

BE5276
BE5277
BE0111

Parts Replacement

See Parts Replacement of Combination Switch on page BE-25.

Parts Inspection

Wiper System

1. **INSPECT SWITCHES**

(Front Wiper and Washer Switch/Continuity)

w/ Mist Wiper

Terminal (Color) / Switch position		A1 (B)	A2 (L)	A4 (L-W)	A7 (L-R)	A8 (L-B)	A9 (L-O)
Wiper	MIST			○		○	
	OFF				○	○	
	LO			○		○	
	HI			○			○
Washer	OFF						
	ON	○	○				

w/ Intermittent Wiper

Terminal (Color) / Switch position		A1 (B)	A2 (L)	A4 (L-W)	A7 (L-R)	A8 (L-B)	A9 (L-O)
Wiper	OFF				○	○	
	INT				○	○	
	LO			○		○	
	HI			○			○
Washer	OFF						
	ON	○	○				

If continuity is not as specified, replace the switch.

(Rear Wiper and Washer Switch/Continuity)

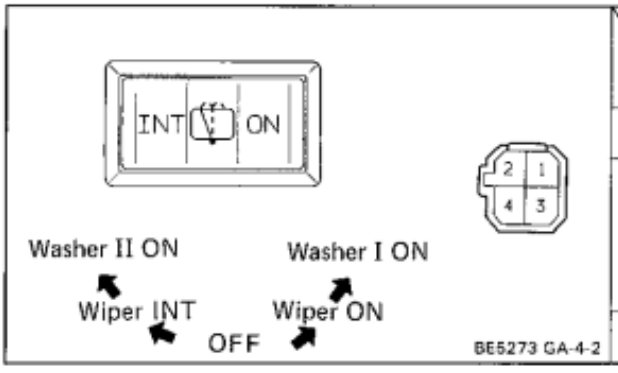

Switch position		Terminal 1	2	3	4
Washer I	ON	○		○	○
Wiper	ON			○	○
	OFF				
	INT		○		○
Washer II	ON	○	○		○

If continuity is not as specified, replace the switch.

(Wiper Lock Switch: w/ Collapsible Wiper)

(Continuity)

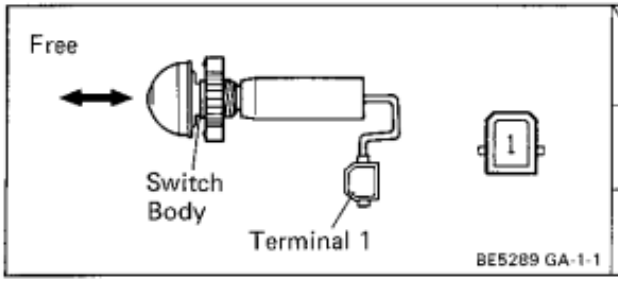

Switch position	Terminal 1	Switch body
Free (OFF)		
Push (ON)	○	○

If continuity is not as specified, replace the switch.

2. INSPECT RELAYS

(Front Wiper Relay: w/ Washer Linked)

(Continuity)

(a) Check that there is no continuity between terminals 1 and 3.

(b) Check that there is continuity between terminals 2 and 3.

If continuity is not as specified, replace the relay.

(Operation at Intermittent)

(a) Connect the positive (+) lead from the battery to terminal 1 and the negative (−) lead to terminal 4, 2 and 5.

(b) Connect the positive (+) lead from the voltmeter to terminal 3 and the negative (−) lead to terminal 4.

(c) Check that the voltage changes as shown in the table.

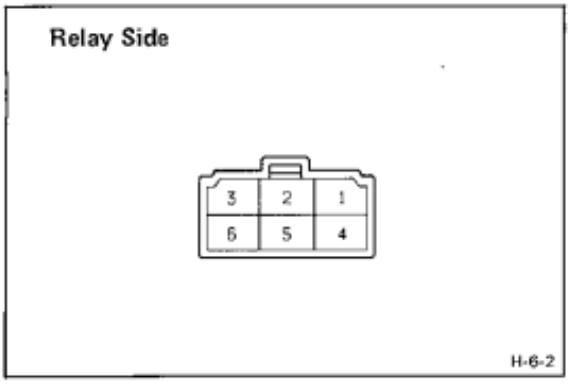

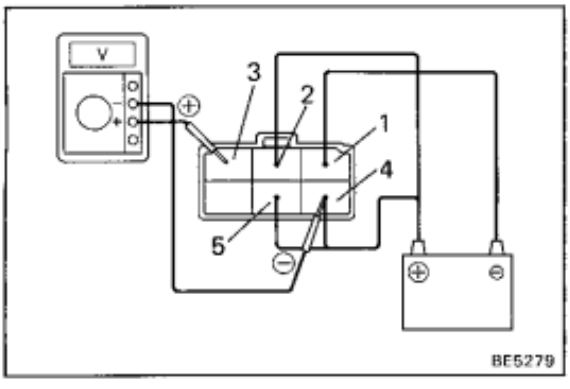

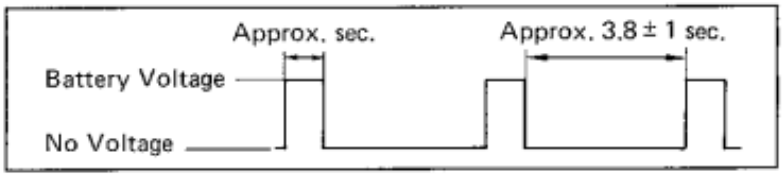

If operation is not as specified, replace the switch.

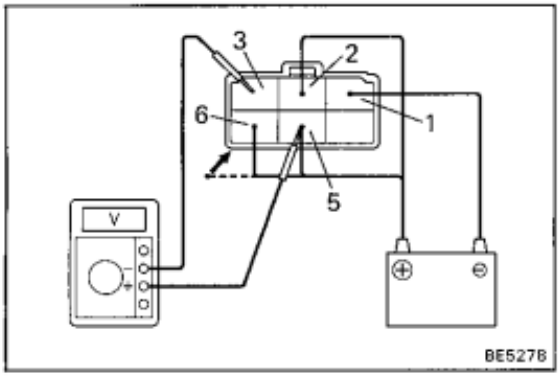

(Operation at Washer Linked)

(a) Connect the positive (+) lead from the battery to terminal 1 and the negative (—) lead to terminal 5 and 2.

(b) Connect the positive (+) lead from the voltmeter to terminal 3 and the negative (—) lead to terminal 5.

(c) Connect the negative (—) lead from the battery to terminal 6, check that the voltage changes soon to battery voltage from to voltage.

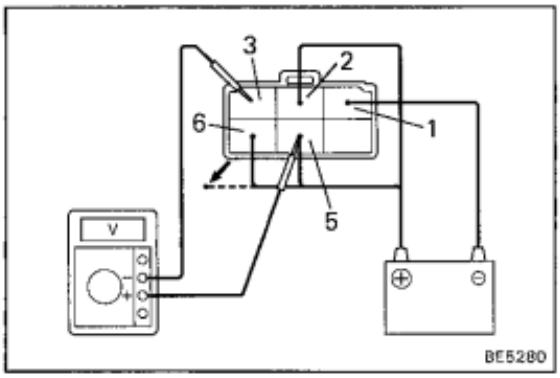

(d) Disconnect the negative (—) lead from terminal 6, check that the voltage changes to no voltage from battery voltage approximately 2.5 seconds later.

If operation is not as specified, replace the relay.

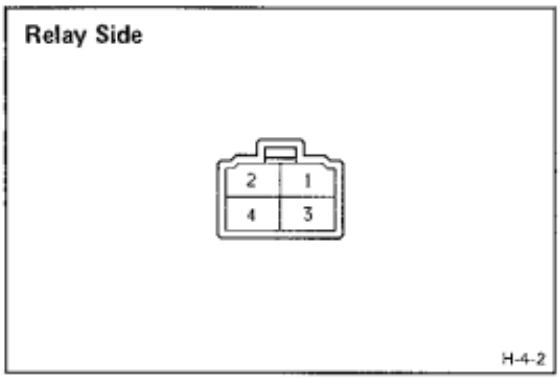

(Front Wiper Relay: w/o Washer Linked)

(Continuity)

(a) Check that there is no continuity between terminals 1 and 3.

(b) Check that there is continuity between terminals 1 and 4.

If continuity is not as specified, replace the relay.

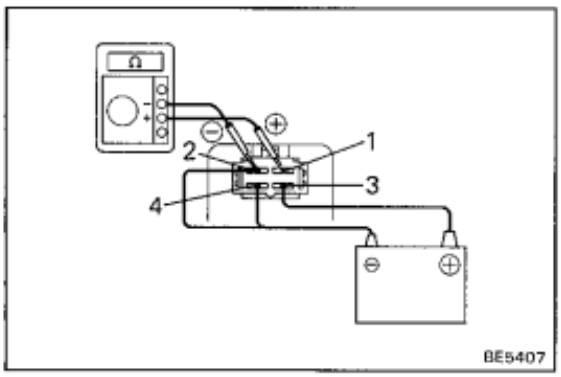

(Operation at Intermittent)

(a) Connect the positive (+) lead from the battery to terminal 3 and the negative (—) lead to terminal 2 and 4.

(b) Connect the positive (+) lead from the voltmeter to terminal 1 and the negative (—) lead to terminal 2.

(c) Check that the voltage changes as shown in the table.

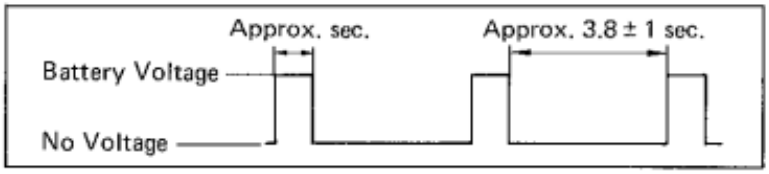

If operation is not as specified, replace the switch.

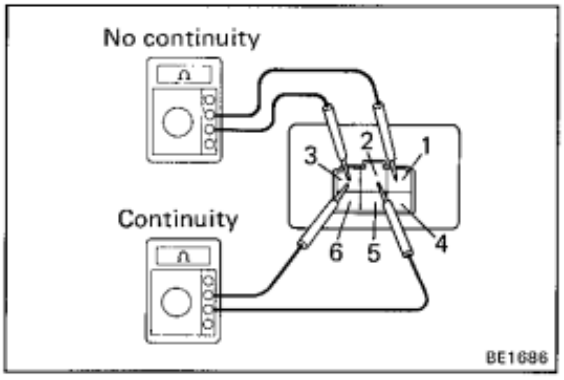

(Rear Wiper Relay)

(Continuity)

(a) Check that there is no continuity between terminals 1 and 3.

(b) Check that there is continuity between terminals 2 and 3.

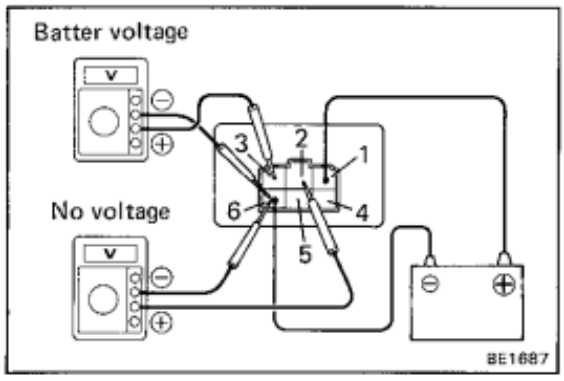

(Operation)

(c) Connect the positive (+) lead from the battery to terminal 1 and the negative (—) lead to terminal 6.

(d) Connect the positive (+) lead from the voltmeter to terminal 2 and the negative (—) lead to terminal 6, check that the meter needle indicates to 0 volts.

(e) Connect the positive (+) lead from the voltmeter to terminal 3 and the negative (—) lead to terminal 6, check that the meter needle indicates to battery boltage.

If operation is not as specified, replace the relay.

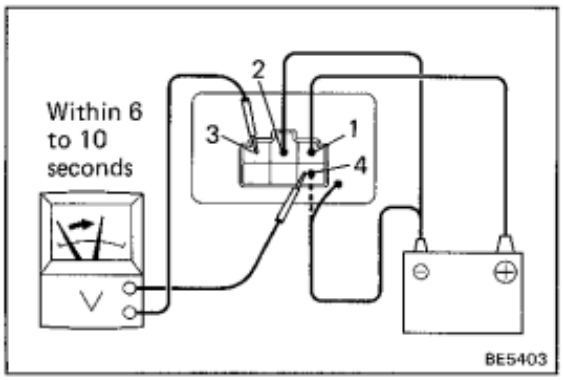

(Operation at Intermittent)

(a) Connect the positive (+) lead from the battery to terminal 1 and the negative (—) lead to terminal 2.

(b) Connect the positive (+) lead from the voltmeter to terminal 3 and the negative (—) lead to terminal 4.

(c) After connecting the negative (—) lead from terminal 4, connect it to terminal 1, and then, check that the meter needle rises from 0 volts to battery voltage within 6 to 10 second.

If operation is not as specified, replace the relay.

(Wiper Lock Relay: w/ Collapsible Wiper)

(Continuity)

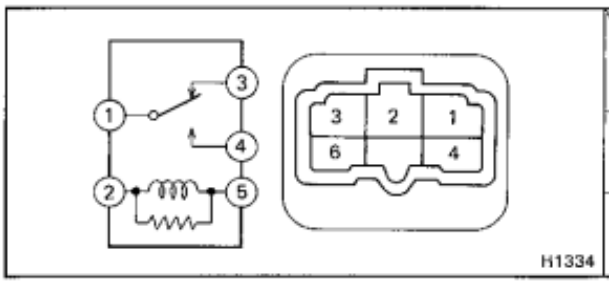

Terminal / Condition	1	2	3	4	6
Constant	○		○	○	○
Apply battery voltage to terminal 2 and 6	○			○	

If continuity is not as specified, replace the relay.

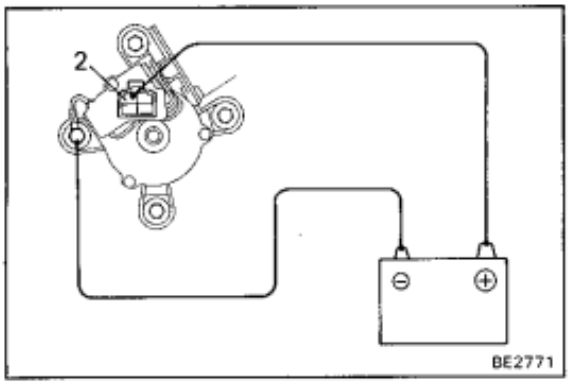

3. **INSPECT MOTOR**

(Front Motor/Operation at Low Speed)

Connect the positive (+) lead from the battery to terminal 2 and the negative (−) lead to the motor body, check that the motor operates as low speed.

If operation is not as specified, replace the motor.

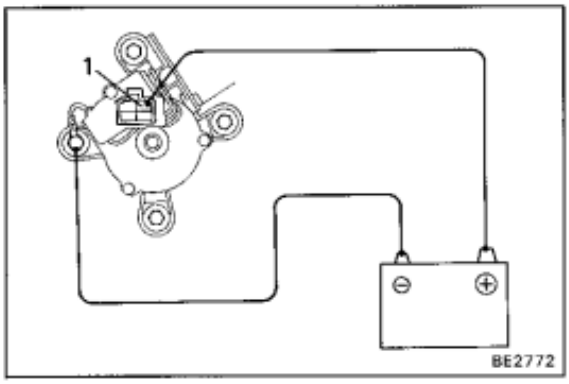

(Front Motor/Operation at High Speed)

Connect the positive (+) lead from the battery to terminal 1 and the negative (−) lead to the motor body, check that the motor operation at high speed.

If operation is not as specified, replace the motor.

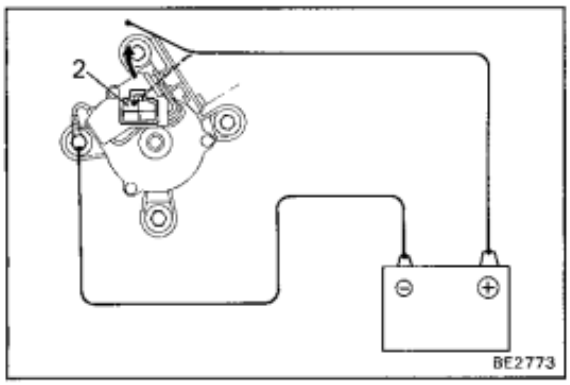

(Front Motor/Operation, Stopping at Stop Position)

(a) Operate the motor at low speed and stop the motor operation anywhere except at the stop position by disconnecting positive (+) lead from terminal 2.

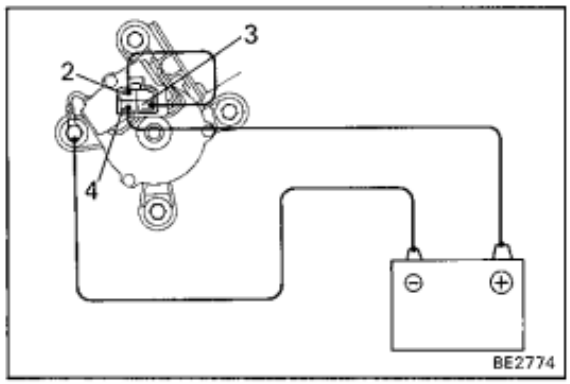

(b) Connect terminals 2 and 3.

(c) Connect the positive (+) lead from the battery to terminal 4 and the negative (−) lead to the motor body, check that the motor stops running at the stop position after the motor operates again.

If operation is not as specified, replace the motor.

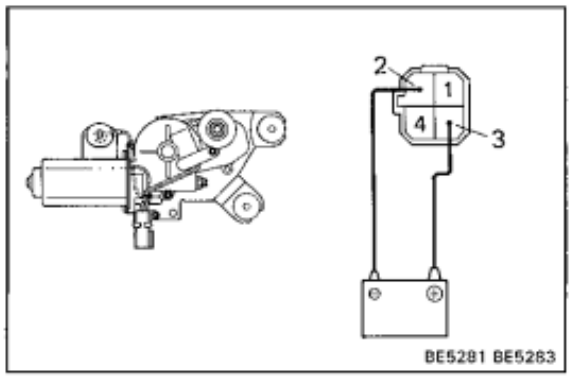

(Rear Motor/Operation at Low Speed)

Connect the positive (+) lead from the battery to terminal 3 and the negative (−) lead to terminal 2, check that the motor operates as low speed.

If operation is not at specified, replace the motor.

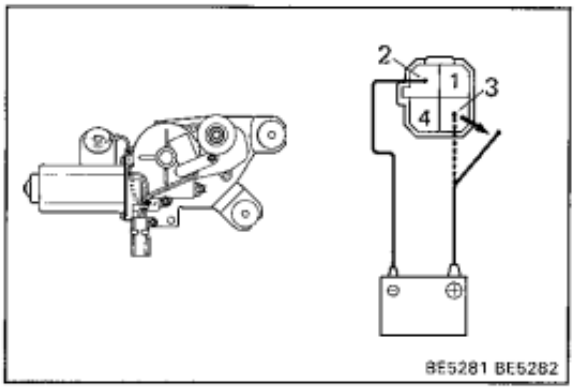

(Rear Motor/Operation, Stopping at Stop Position)

(a) Operate the motor at low speed and stop the motor operation anywhere except at the stop position by disconnecting positive (+) lead from terminal 3.

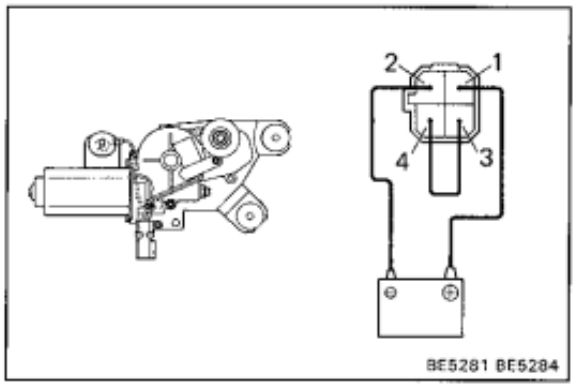

(b) Connect terminals 3 and 4.

(c) Connect the positive (+) lead from the battery to terminal 1 and the negative (−) lead to terminal 2, check that the motor stops running at the stop position after the motor operates again.

If operation is not as specified, replace the motor.

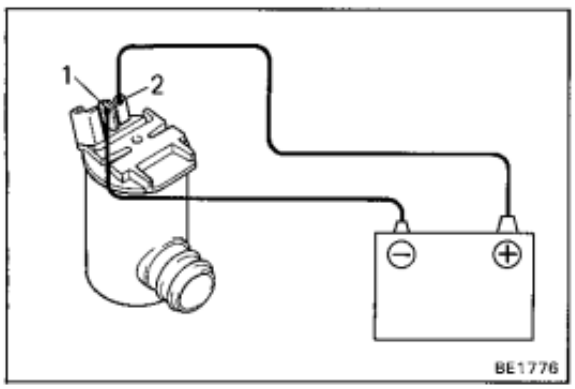

Washer System

1. INSPECT WASHER SWITCH
(Washer Switch)

See Wiper and Washer Switch on page BE-41.

2. INSPECT WASHER MOTOR

Connect the positive (+) lead from the battery to terminal 2 and the negative (−) lead to terminal 1, check that the motor operates.

NOTICE: These tests must be performed quickly (within 20 seconds) to prevent the coil from burning out.

If operation is not as specified, replace the motor.

COMBINATION METER

Parts Location

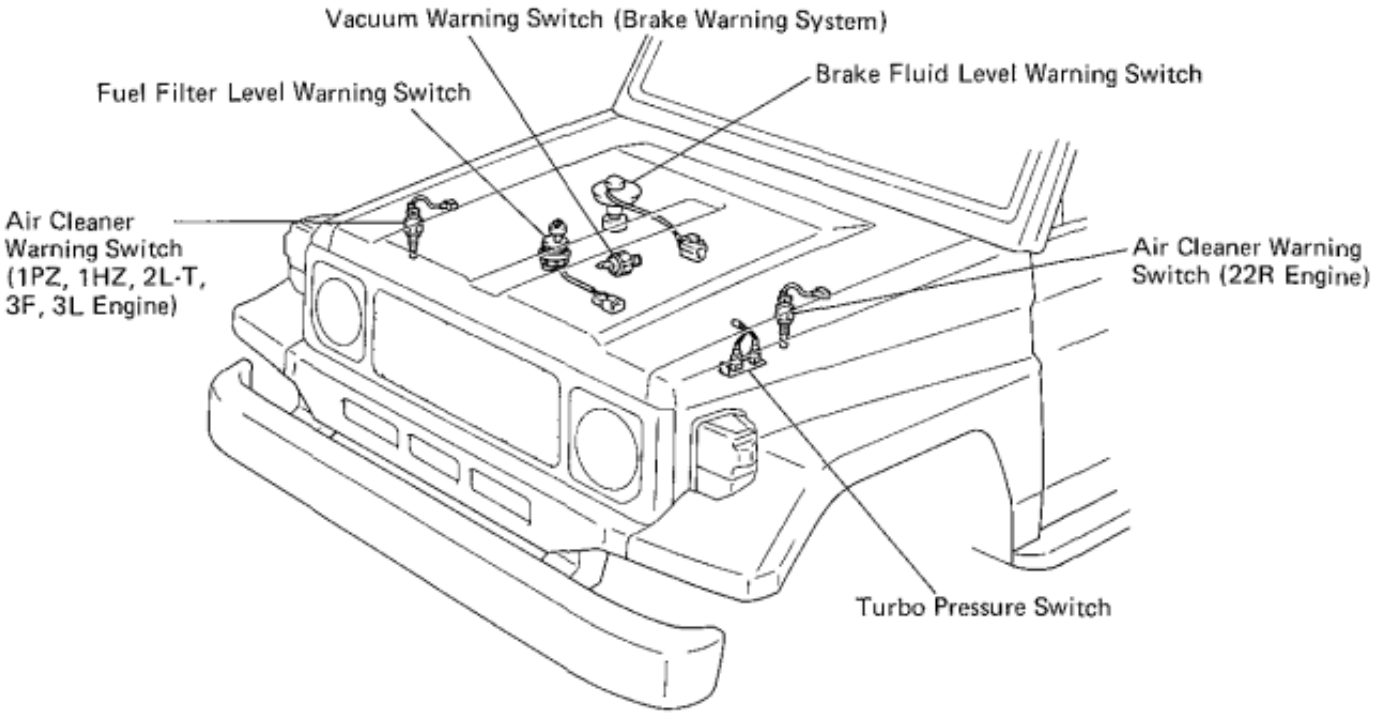

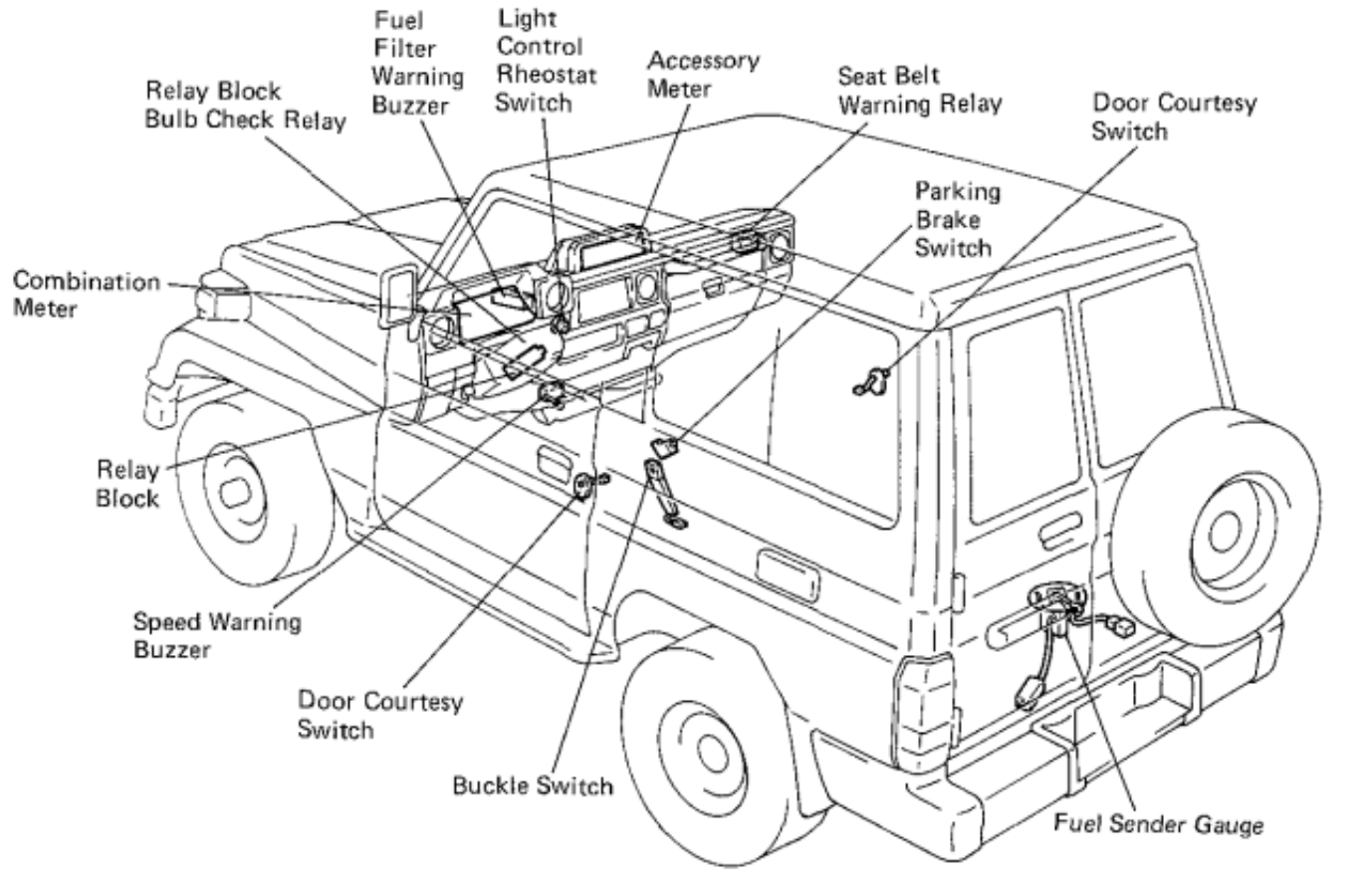

BE5350
BE5382

Hard Top

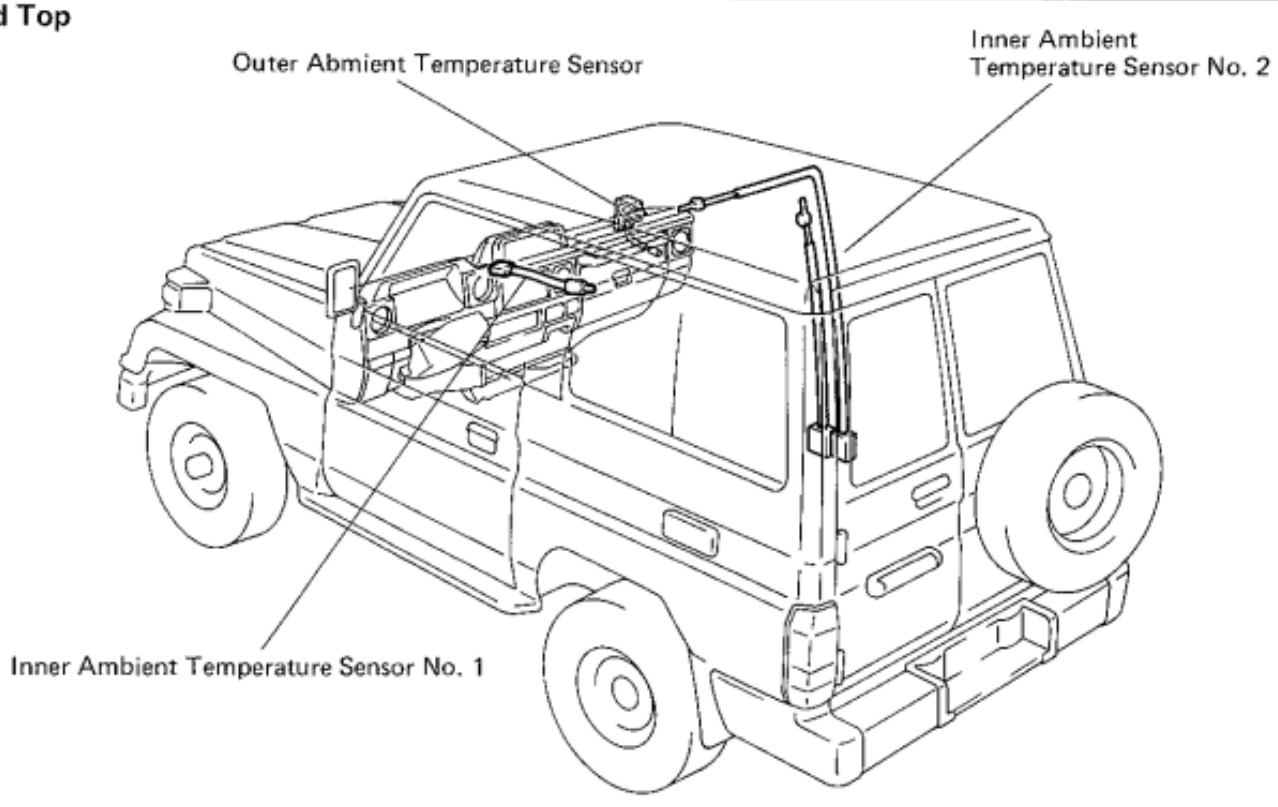

Pick Up

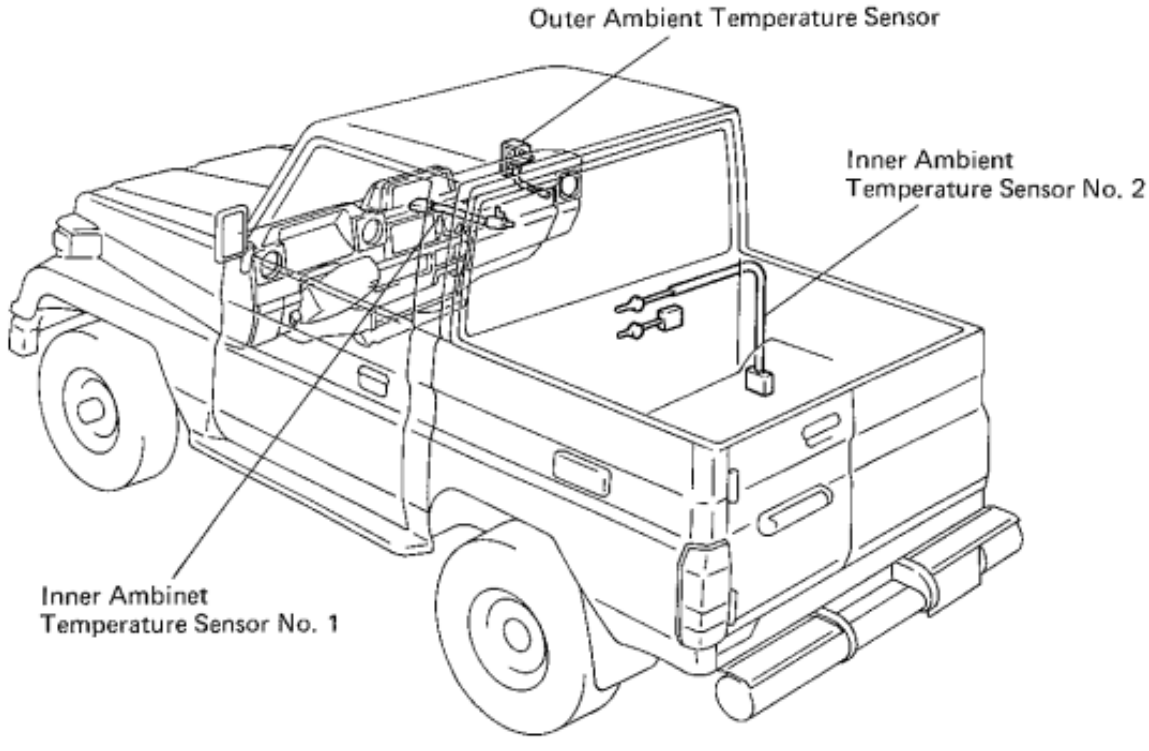

BE5383
BE5384

22R, 22R-E Engine

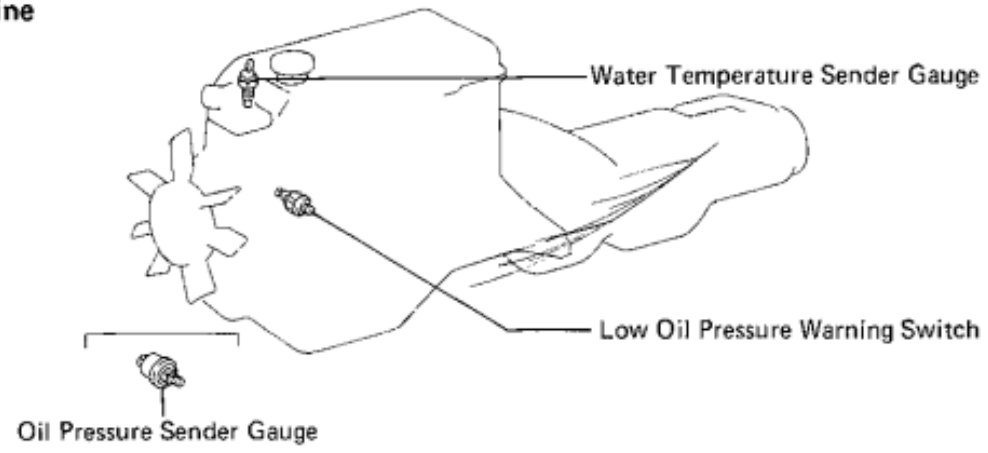

2L-T, 3L Engine

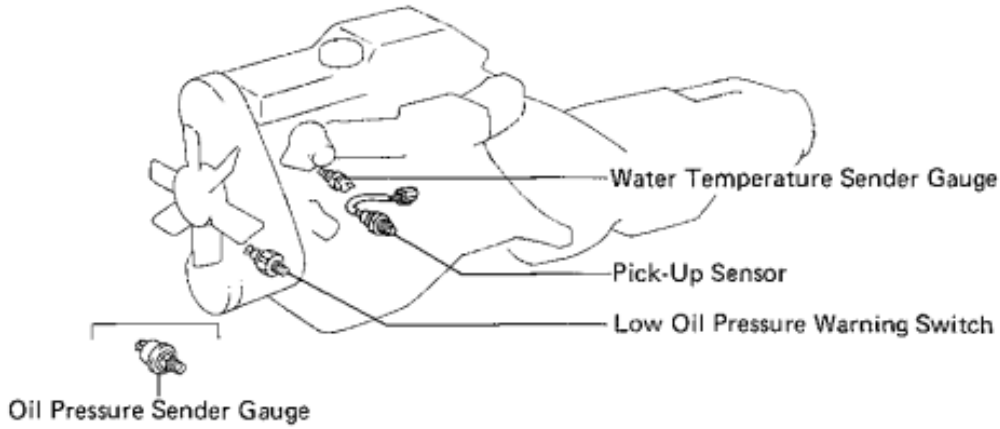

1HZ, 1PZ Engine

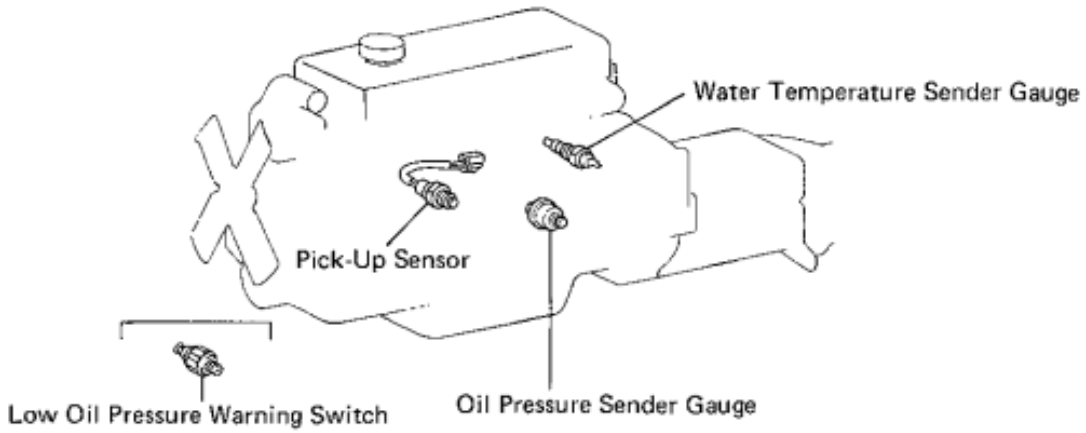

3F Engine

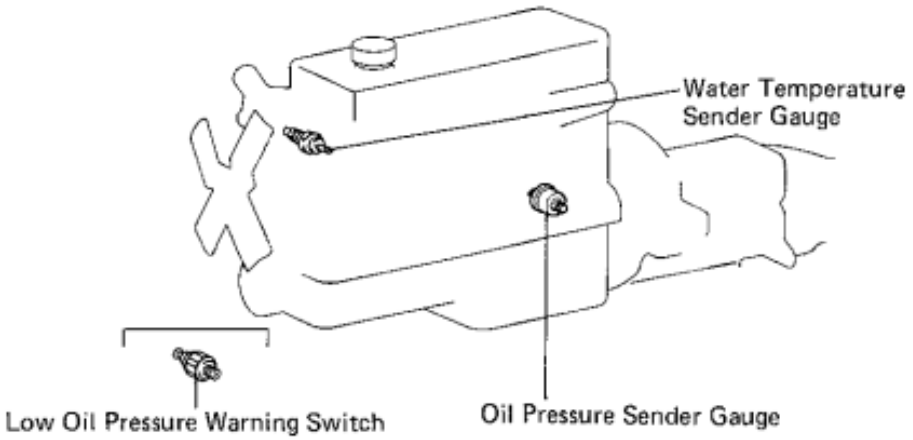

BE5351
BE5352
BE5353
BE5354

Meter Circuit

(w/o Tachometer)

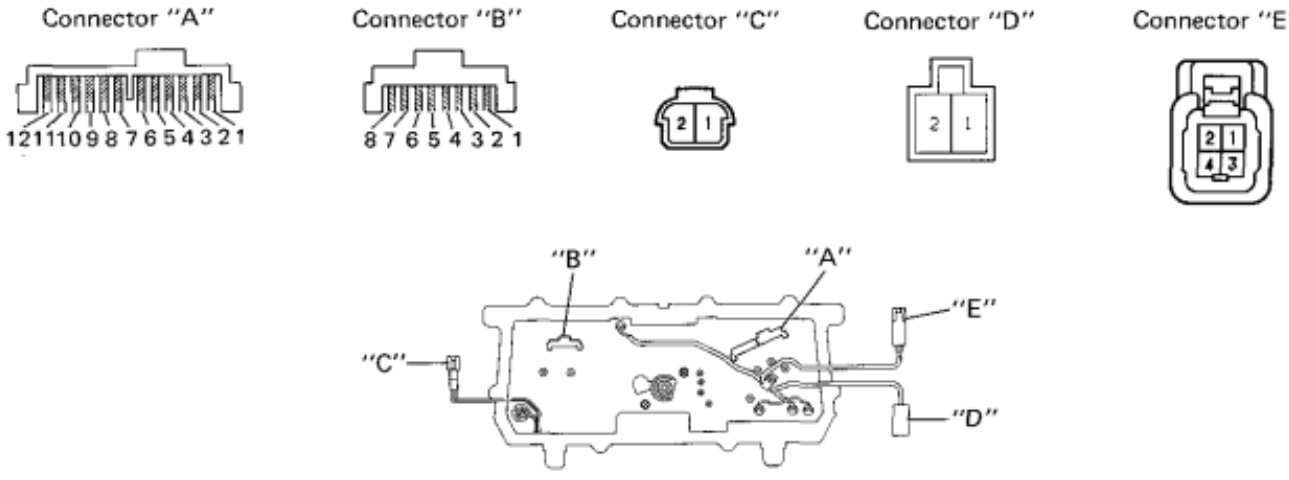

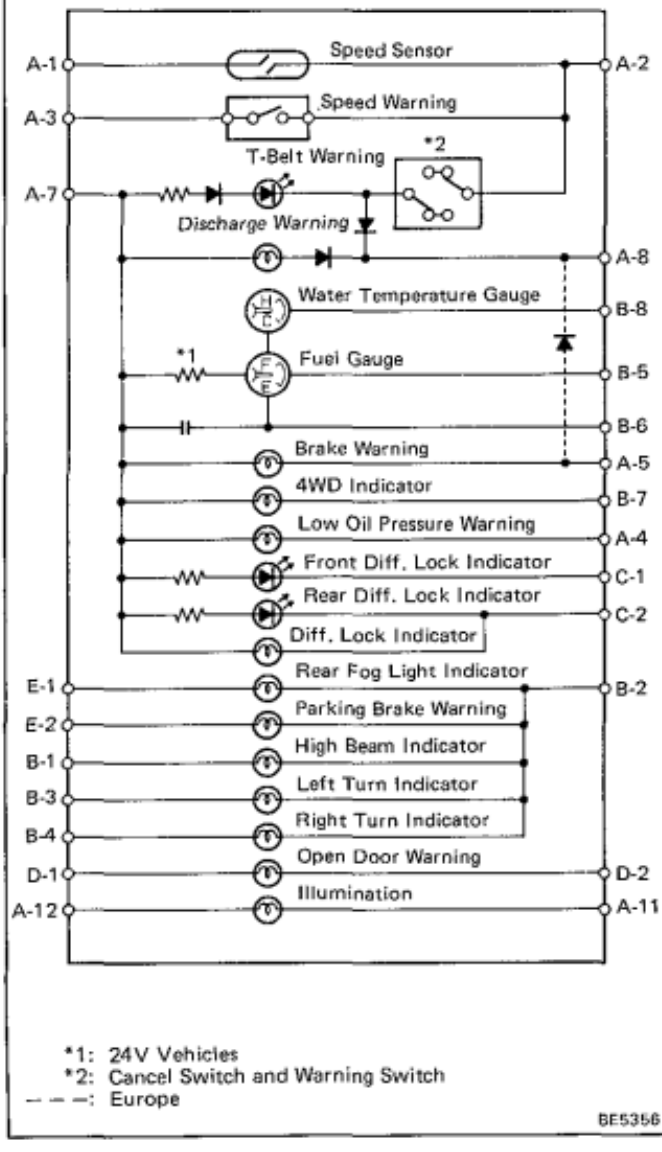

*1: 24V Vehicles
*2: Cancel Switch and Warning Switch
– – –: Europe

BE5356

BE1267 BE2639 S-2-2-G N-2-2 e-4-2
BE5355

No.		Wiring connector side
A	1	Emission ECU
	2	Ground
	3	Speed Warning Buzzer
	4	Low Oil Pressure Warning Switch
	5	Brake Fluid Level Warning Switch, Vacuum Switch (Diesel Engine) and Parking Brake Switch (Ex. Europe)
	7	ENGINE Fuse
	8	CHARGE Fuse
	11	Light Control Rheostat or Ground
	12	TAIL Fuse
B	1	Headlight Dimmer Switch
	2	Ground
	3	Turn Signal Switch (Left)
	4	Turn Signal Switch (Right)
	5	Fuel Sender Gauge
	6	Ground
	7	4WD Switch
	8	Water Temperature Sender Gauge
C	1	Front Diff. Lock Switch
	2	Rear Diff. Lock Switch
D	1	DOME Fuse
	2	Door Courtesy Switch
E	1	Rear Fog Light Switch (Europe)
	2	Parking Brake Switch (Europe)

(w/ Tachometer)

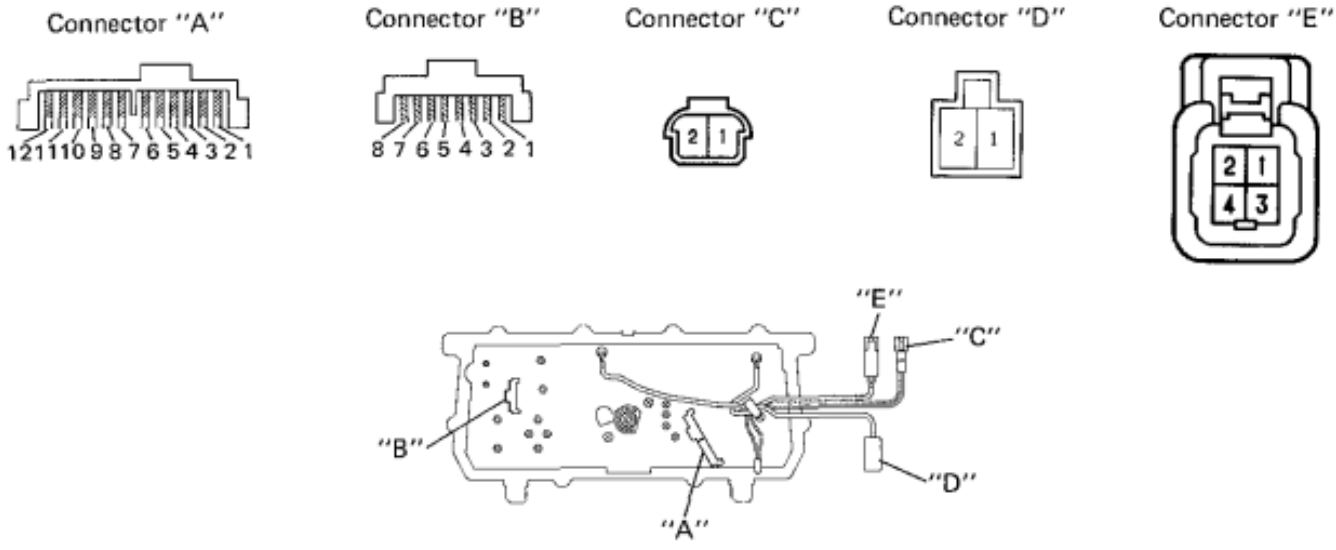

BE1267 BE2639 S-2-2-G N-2-2 e-4-2
BE5357

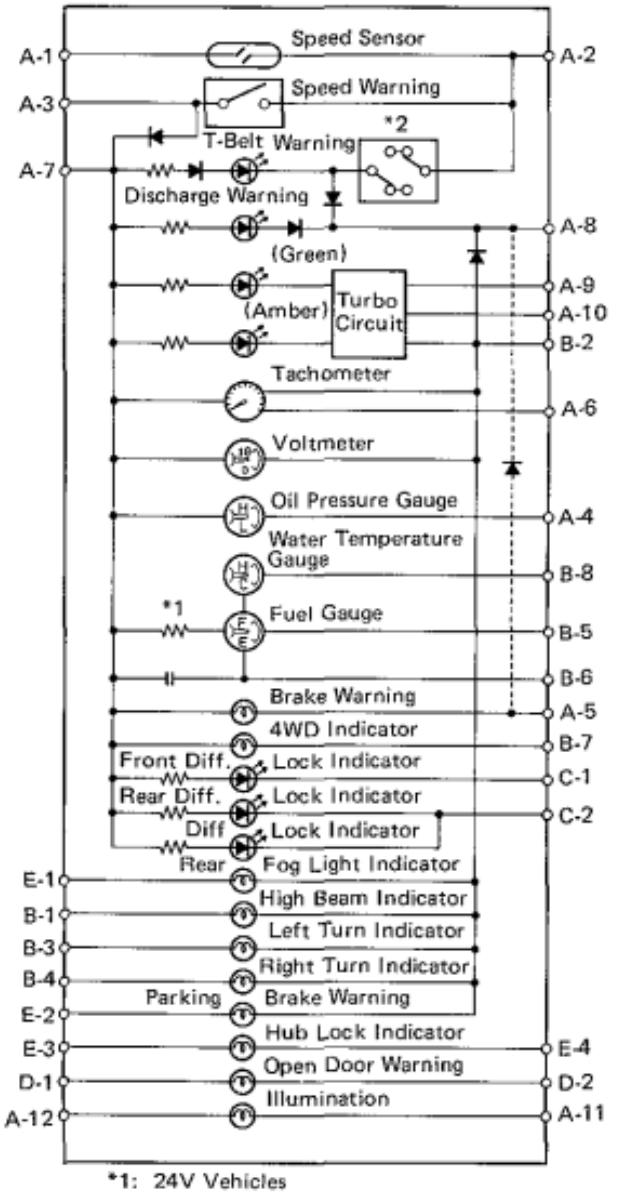

*1: 24V Vehicles
*2: Cancel Switch and Warning Switch
– – –: Europe

BE5358

No.		Wiring connector side
A	1	Emission ECU
	2	Ground
	3	Speed Warning Buzzer
	4	Oil Pressure Sender Gauge
	5	Brake Fluid Level Warning Switch, Vacuum Switch (Diesel Engine), Parking Brake Switch (Ex. Europe) and Buld Check Relay (Australia)
	6	Ignition Coil (Gasoline Engine) or Tacho Pick Sensor (Diesel Engine)
	7	ENGINE Fuse
	8	CHARGE Fuse
	9	Turbo Pressure Switch-terminal 2
	10	Turbo Pressure Switch-terminal 1
	11	Light Control Rheostat or Ground
	12	TAIL Fuse
B	1	Headlight Dimmer Switch
	2	Ground
	3	Turn Signal Switch (Left)
	4	Turn Signal Switch (Right)
	5	Fuel Sender Gauge
	6	Ground
	7	4WD Switch
	8	Water Temperature Sender Gauge
C	1	Front Diff. LOCK Switch
	2	Rear Diff. LOCK Switch
D	1	DOME Fuse
	2	Door Courtesy Switch
E	1	Rear Fog Light Switch
	2	Parking Brake Switch (Europe)
	3	ENGINE Fuse
	4	Free Wheel Hub CPU

(Accessory Meter/Over Head Console)

- **Altimeter and Clinometer**

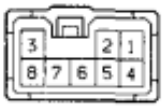

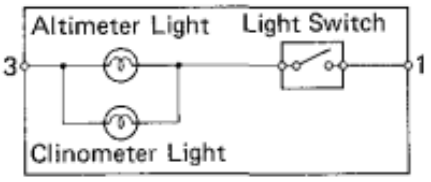

No.	Wiring connector side
1	Ground
3	TAIL Fuse

- **Thermometer and Altimeter**

Connector "A" Connector "B"

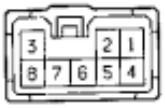

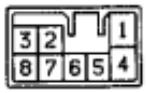

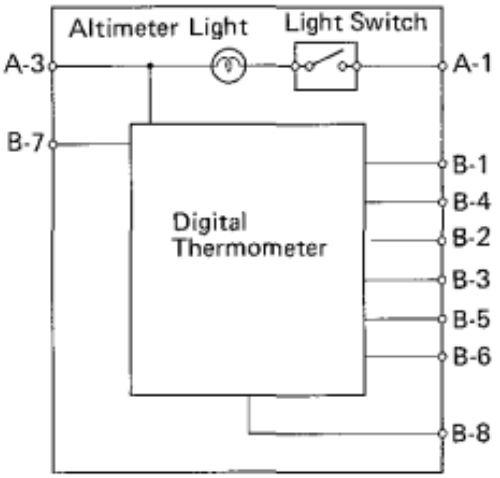

No.		Wiring connector side
A	1	Ground
	3	TAIL Fuse
B	1	Inner Ambient Temperature Sensor No.2
	2	Inner Ambient Temperature Sensor No.1
	3	Inner Ambient Temperature Sensor No.1
	4	Inner Ambient Temperature Sensor No.2
	5	Outer Ambient Temperature Sensor
	6	Outer Ambient Temperature Sensor
	7	ENGINE Fuse
	8	Ground

- **Sub Fuel Gauge**

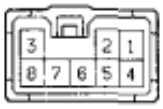

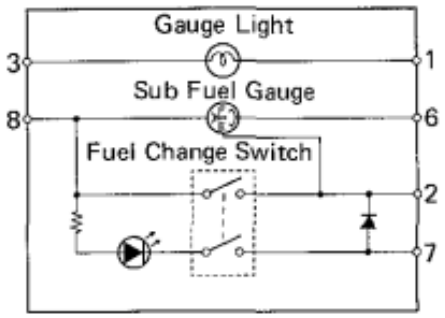

No.	Wiring connector side
1	Ground
2	Fuel Transfer Solenoid Valve
3	TAIL Fuse
6	Sub Fuel Sender Gauge
7	Ground
8	ENGINE Fuse

S-8-2
BE5385
S-8-2 GS-8-2
BE5386
S-8-2
BE5387

Troubleshooting

Problem	Possible cause	Remedy	Page
Combination meter do not operate	ENGINE fuse blown Wiring or ground faulty	Replace fuse and check for short Repair as necessary	BE-4
Speedometer does not operate	Speedometer cable faulty Speedometer faulty	Check cable Check speedometer	 BE-57
Speed warning buzzer does not sound	Speed warning buzzer faulty Speed warning switch faulty Wiring or ground faulty	Check speed warning buzzer Check speed warning switch Repair as necessary	BE-58 BE-57
Tachometer does not operate	Tachometer faulty Pick-up sensor faulty Wiring or ground faulty	Check tachometer Check pick-up sensor Repair as necessary	BE-58 BE-58
Voltmeter does not operate	Voltmeter faulty Wiring or ground faulty	Check voltmeter	BE-58
Fuel gauge dose not operate	Receiver gauge faulty Sender gauge faulty Wiring or ground faulty	Check gauge Check gauge	BE-58 BE-60
Fuel filter warning light does not light up, warning buzzer does not sound (w/ buzzer)	Bulb burned out Warning switch faulty Warning buzzer faulty	Replace bulb Check switch Check buzzer	 BE-61 BE-61
Water temperature gauge does not operate	Receiver gauge faulty Wiring or ground faulty	Check gauge	BE-61
Oil pressure gauge does not operate	Receiver gauge faulty Sender gauge faulty Wiring or ground faulty	Check gauge Check gauge	BE-62 BE-63
Low oil pressure warning light does not light up	Bulb burned out Warning switch faulty Wiring or ground faulty	Replace bulb Check switch Repair as necessary	 BE-63
Parking brake warning light does not light up	Bulb burned out Parking brake switch faulty Wiring or ground faulty	Replace bulb Check switch Repair as necessary	 BE-63
Brake warning light dose not light up	Bulb burned out Level warning switch faulty Vacuum switch faulty Parking brake switch faulty Wiring or ground faulty	Replace bulb Check switch Check switch Check switch Repair as necessary	 BE-64 BE-64 BE-63
Open door warning light does not light up	Bulb burned out Courtesy switch faulty Wiring or ground faulty	Replace bulb Check switch Repair as necessary	 BE-65
Timing belt warning light does not light up	Bulb burned out Warning switch faulty Wiring or ground faulty	Replace bulb Check switch Repair as necessary	 BE-65
Seat belt warning light does not light up	Bulb burned out Buckle switch faulty Warning relay faulty Wiring or ground faulty	Replace bulb Check switch Check relay Repair as necessary	 BE-66 BE-67

Problem	Possible cause	Remedy	Page
Turbo indicator and warning light do not light up	Bulb burned out Drive circuit faulty Pressure switch faulty Wiring or ground faulty	Replace bulb Check drive circuit Check switch Repair as necessary	 BE-68 BE-67
Air cleaner warning light does not light up	Bulb burned out Warning switch faulty Wiring or ground faulty	Replace bulb Check switch Repair as necessary	 BE-68
Meter illumination control system does not operate	Bulb burned out Rheostat faulty Wiring or ground faulty	Replace bulb Check rheostat Repair as necessary	 BE-68
Thermometer does not operate	Sensor faulty Accessory meter faulty Wiring or ground faulty	Check sensor Check accessory meter Repair as necessary	BE-69 BE-69
Sub fuel gauge does not operate	Receiver gauge faulty Serder gauge faulty Wiring or ground faulty	Check gauge Check gauge Repair as necessary	BE-70 BE-70
Clinometer or Altimeter illumination do not light up	Bulb burned out Accessory meter faulty Wiring or ground faulty	Replace bulb Replace accessory meter Repair as necessary	

Parts Adjustment

(Diesel Engine)

Adjustment of Interval Switch for Timing Belt Warning System

NOTICE: Work carefully so that components are not damaged in any way.

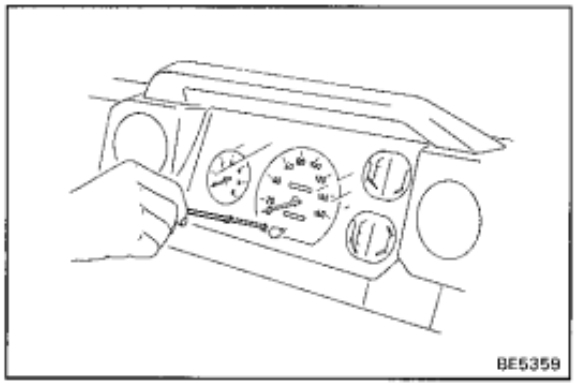

RESET CANCEL SWITCH

(a) Remove the gromet from the meter glass.

(b) Push the reset switch.

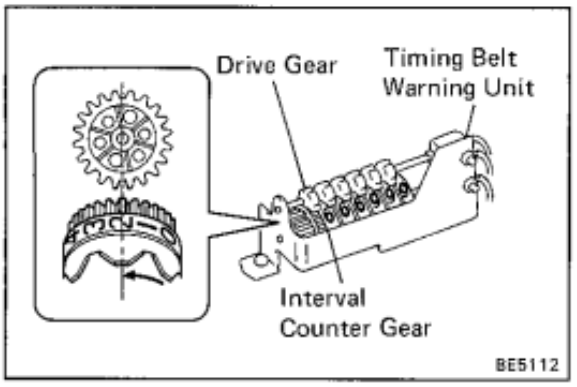

IF REPLACING TIMING BELT BEFORE WARNING LIGHT LIGHTS UP

(a) Remove the timing belt warning unit from the speedometer.

(b) When installing the timing belt warning unit to the speedometer, rotate the interval counter gear in the direction of the arrow so that the tooth at number ''2'' on the interval counter gear engages with the drive gear on the speedometer side.

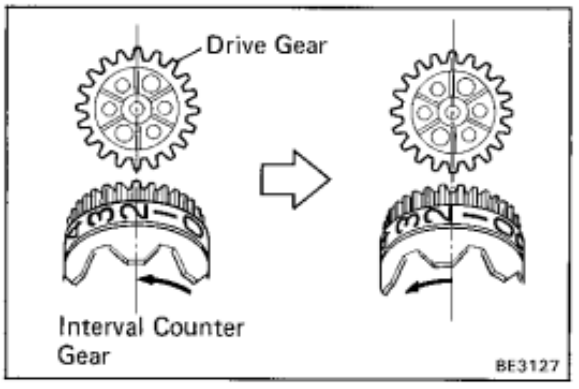

HINT: If the tooth at number ''2'' on the interval counter gear does not engage with the drive gear, move the tooth at number ''2'' slightly in the direction of the arrow until the tooth engage.

(c) Install the timing belt warning unit to the speedometer.

HINT: If turn on the timing belt warning light, reset the cancel switch.

Old odometer reading value (b)	(c) Adjustment number for interval counter gear	
	km/h display	MPH display
10000	1	7
20000	0	6
30000	9	5
40000	8	4
50000	7	3
60000	6	2
70000	5	1
80000	4	0
90000	3	A
100000	2	B
110000	1	9
120000	0	8
130000	9	7
140000	8	6
150000	7	5
•	•	•
•	•	•
•	•	•

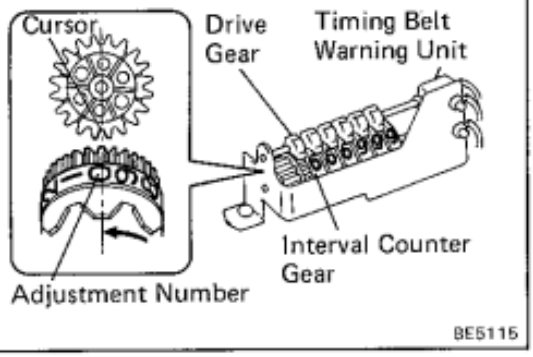

IF REPLACING SPEEDOMETER

(a) Remove the timing belt warning unit from the speedometer.

(b) Read the value in tens of thousands from the old odometer (taken to the next highest figure when the thousands column shows on thousand or more)

(c) Find the value from (b) in the table on the left, then find the corresponding number from adjustment of the interval counter gear.

Example: When the old odometer shows.

013251 km/h
↓
(b) = 020000
↓
(c) = "0" for the interval counter gear number.

(d) When installing the timing belt warning unit to the speedometer, rotate the interval counter gear in the direction of the arrow so that the number (c) on the interval counter gear alighs with the cursor on the drive gear on the speedometer side.

HINT: Check that the tooth beside to number on the counter gear engages the gap on the cursor port on the drive gear.

(e) Install the timing belt warning unit to the speedometer.

(km/h)

Standard indication	Allowable range	
	Ex. Australia	Australia
20	21 — 25	(17.5 — 21.5)
40	41 — 46	38 — 42
60	62.5 — 67	58 — 63
80	83 — 88	78 — 84
100	104 — 109	99 — 104.5
120	125 — 130.5	119.5 — 125.5
140	145.5 — 151.5	139.5 — 146.5
160	(166 — 173)	(159.5 — 167.5)

Figures in brakets are not official, they are for reference only.

(mph)

Standard indication	Allowable range
20	21 — 23.5
40	41.5 — 44
60	62.5 — 66
80	83 — 87
100	104 — 108.5

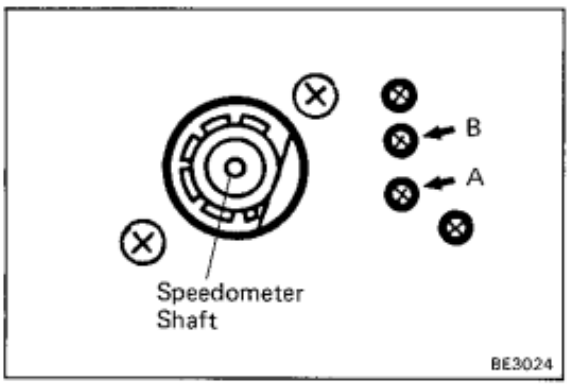

Parts Inspection

Speedometer System

1. INSPECT SPEEDOMETER (ON-VEHICLE)

(a) Using a speedometer tester, inspect the speedometer for allowable indication error and check the operation of the odometer.

HINT: Tire wear and tire over or under inflation will increase the indication error.

If error is excessive, replace the speedometer.

(b) Check the speedometer for pointer vibration and abnormal noise.

HINT: Pointer vibration can be caused by a loose speedometer cable.

2. INSPECT SPEED SENSOR

Check that there is continuity between terminals A and B four times per each revolution of the speedometer shaft.

If operation is not as specified, replace the speedometer.

3. INSPECT SPEED WARNING BUZZER SWITCH

(a) Press down on the tabs and remove the combination meter glass from the combination meter case.

NOTICE: Be careful not to dirty or damage the speedometer panel.

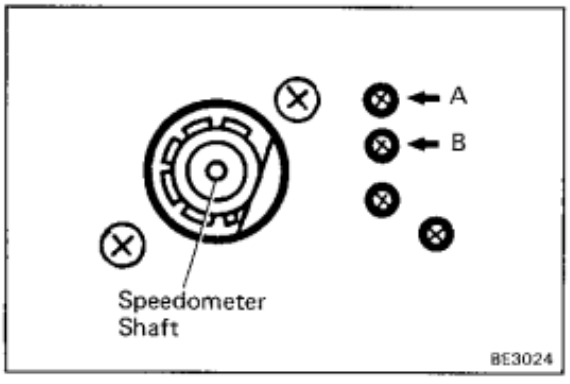

(b) Move the speedometer needle to the 124 km/h or 77 mph mark and fix it there.

(c) Keep on turning the speedometer shaft, check that the continuity between terminals A and B repeatedly fluctuates.

If operation is not as specified, replace the speedometer.

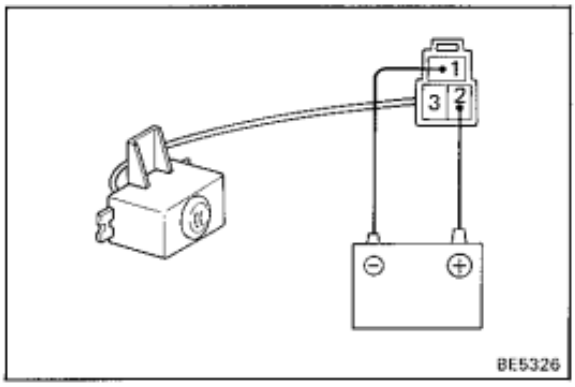

4. INSPECT SPEED WARNING BUZZER

Apply battery voltage intermittently between terminals of the buzzer, check that the buzzer sounds.

HINT: The sound will be distorted if the buzzer is tilted.

If operation is not as specified, replace the buzzer.

(rpm)
DC 13 V 25°C (77°F)/12 V Vehicles
DC 26 V 25°C (77°F)/24 V Vehicles

Standard	Allowable range
1000	900 — 1100
(2000)	(1875 — 2125)
3000	2850 — 3150
(4000)	(3850 — 4150)
5000	4850 — 5150
(6000)	(5870 — 6180)

Figures in brackets are not official, they are for reference only.

Tachometer System

1. INSPECT TACHOMETER (ON-VEHICLE)

(a) Connect a tune-up test tachometer, and start the engine.

NOTICE:

- **Reversing the connection of the tachometer will damage the transistors and diodes inside.**
- **When removing or installing the tachometer, be careful not to drop or subject it to heavy shocks.**

(b) Compare the tester and tachometer indications.

If error is excessive, replace the tachometer.

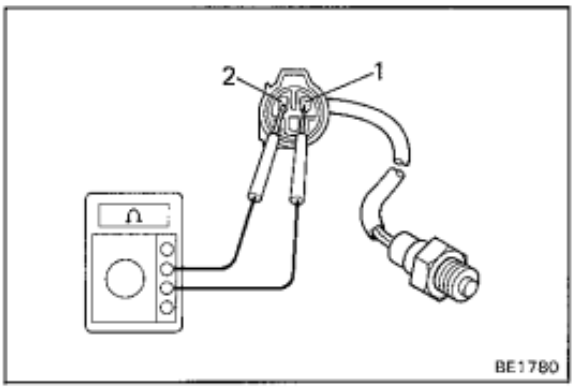

2. (Diesel Engine)
INSPECT PICK-UP SENSOR

Measure the resistance between terminals 1 and 2.

Resistance: approx. 730 Ω

If resistance value is not as specified, replace the sensor.

Voltmeter System

INSPECT VOLTMETER (ON-VEHICLE)

Compare the tester and voltmeter indications.

If error is excessive, replace the voltmeter.

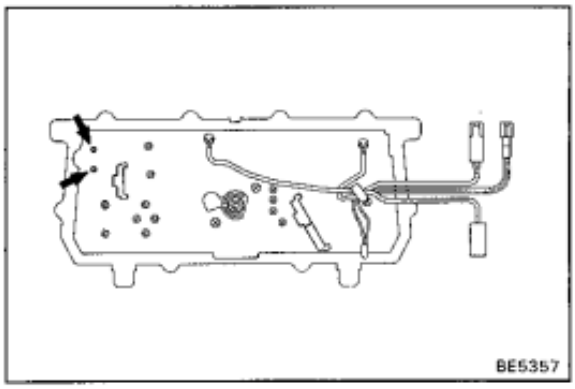

Fuel Gauge System

1. INSPECT RECEIVER GAUGE
(Operation)

(a) Disconnect the connector from the sender gauge.

(b) Turn the ignition switch ON, check that the receiver gauge needle indicates EMPTY.

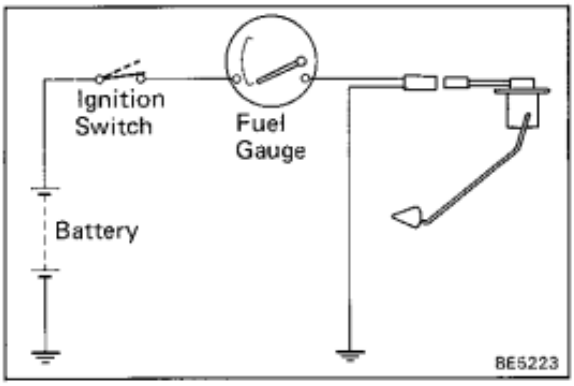

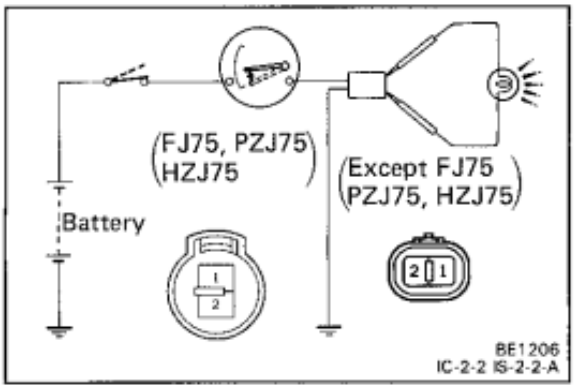

(c) Connect terminals 1 and 2 on the wire harness side connector through a 3.4 W test bulb.

(d) Turn the ignition switch ON, check that the bulb lights up and receiver gauge needle moves toward the full side.

HINT: Because of the silicon oil in the gauge, it will take a short time for the needle to stabilize.

If operation is not as specified, inspect the receiver gauge resistance and the voltage regulator.

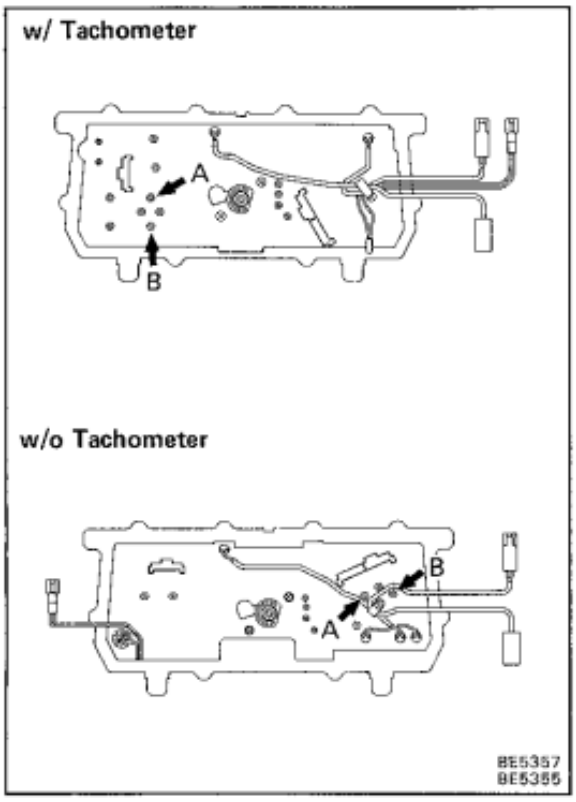

(Resistance)

HINT: The number in brackets ( ) applies to 24 V vehicles.

Measure the resistance between terminals.

Between terminals	Resistance (Ω)
A — B	Approx. 55 (90)

If resistance valve is not as specified, replace the receiver gauge.

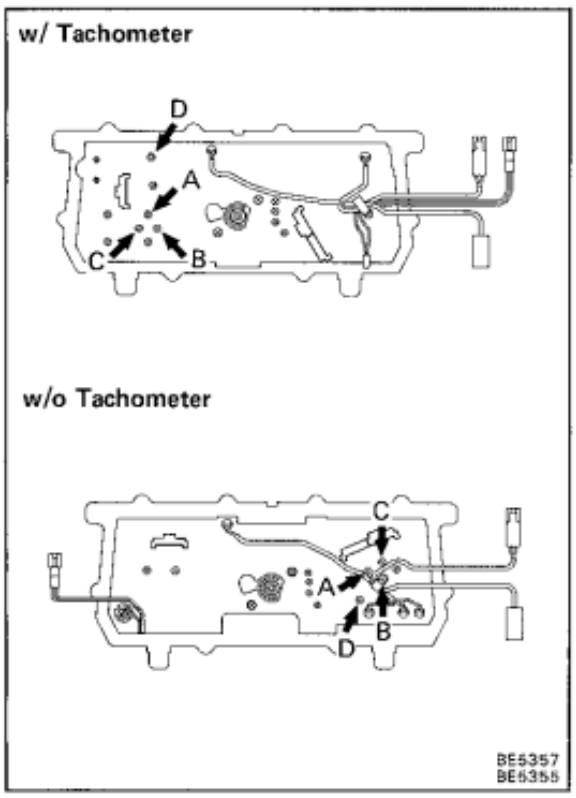

(Voltage Regulator)

HINT: The number in brackets ( ) applies to 24 V vehicles.

(a) Connect the positive (+) lead from the battery to terminal A (D) and the negative (−) lead to terminal B.

(b) Connect the positive (+) lead from the voltmeter to terminal C and the negative (−) lead to terminal B, check that the voltmeter needle vibrates near the 7 volts position.

If voltage value is not as specified, replace the receiver gauge.

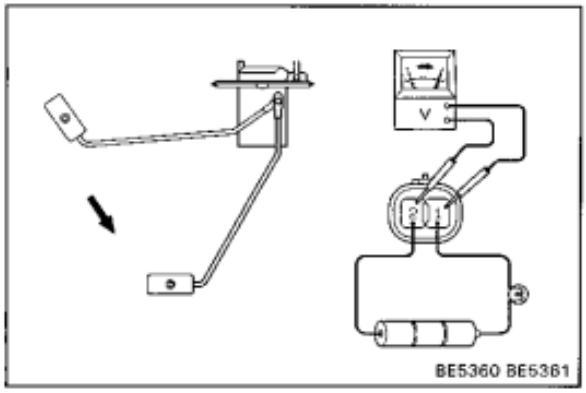

BE5360 BE5361

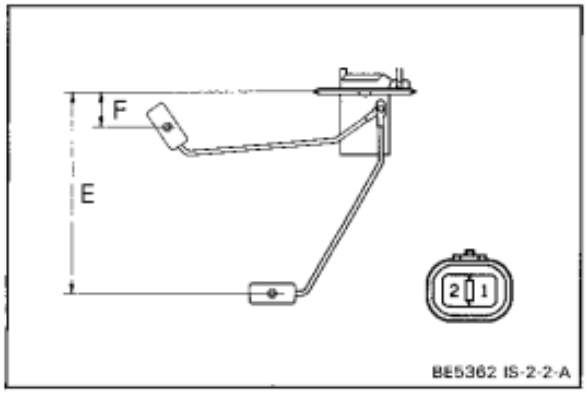

BE5362 IS-2-2-A

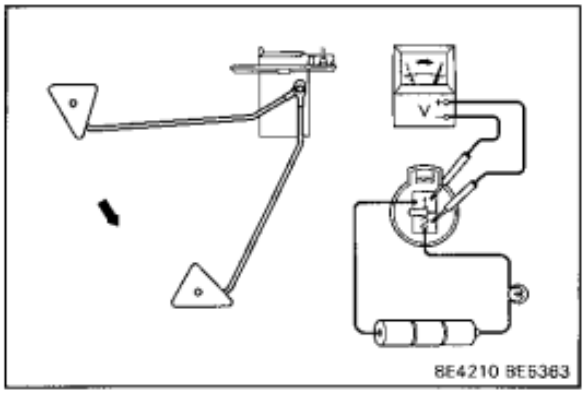

BE4210 BE5363

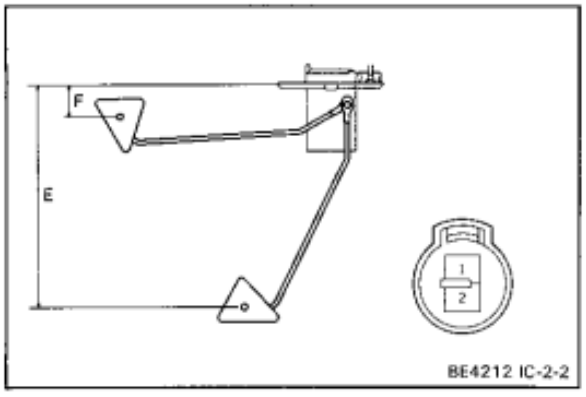

BE4212 IC-2-2

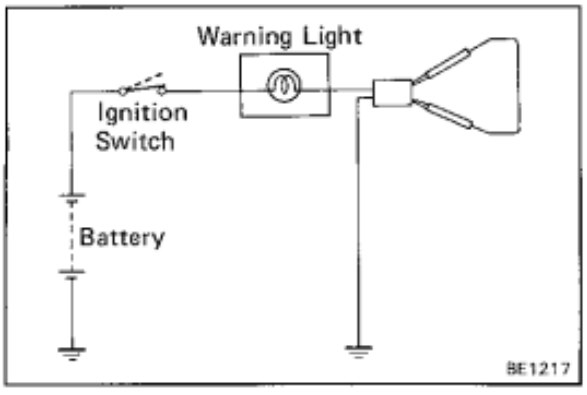

BE1217

2. INSPECT SENDER GAUGE

Except FJ75, PZJ75 and HZJ75
(Operation)

(a) Connect a series of three 1.5 V dry cell batteries.

(b) Connect the positive (+) lead from the dry cell batteries to terminal 2 through a 3.4 W test bulb and the negative (−) lead to terminal 1.

(c) Check that the voltage rises between terminals 1 and 2 as the float is moved from the top to bottom position.

(Resistance)

Measure the resistance between terminals 1 and 2 for each float position.

Float position mm (in.)		Resistance (Ω)
F	Approx. 76.7 (3.020)	Approx. 3
E	Approx. 302.4 (11.905)	Approx. 110

If resistance value is not as specified, replace the sender gauge.

FJ75, PZJ75 and HZJ75
(Operation)

(a) Connect a series of three 1.5 V dry cell batteries.

(b) Connect the positive (+) lead from the dry cell batteries to terminal 2 through a 3.4 W test bulb and the negative (−) lead to terminal 1.

(c) Check that the voltage rises between terminals 1 and 2 as the float is moved from the top to bottom position.

(Resistance)

Measure the resistance between terminals 1 and 2 for each float position.

Float position mm (in.)		Resistance (Ω)
F	Approx. 56 (2.20)	Approx. 3
E	Approx. 259.1 (10.201)	Approx. 110

If resistance value is not as specified, replace the sender gauge.

Fuel Filter Warning System

1. INSPECT WARNING LIGHT

(a) Disconnect the connector from the warning switch and connect terminals on the wire harness side connector.

(b) Remove the CHARGE fuse and turn the ignition switch ON.

(c) Check that the warning light lights up and the warning buzzer sounds.

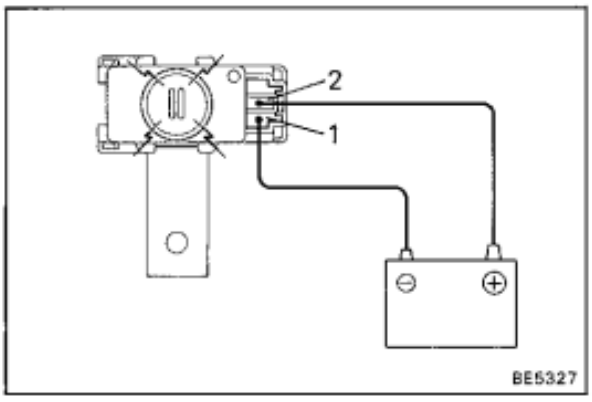

2. INSPECT WARNING BUZZER

Connect the positive (+) lead from the battery to terminal 2 and the negative (–) lead to terminal 1, check that the buzzer sounds.

If buzzer does not sound, replace the buzzer.

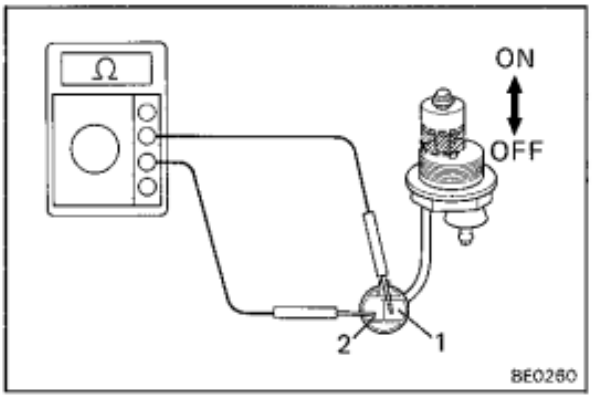

3. INSPECT WARNING SWITCH

(a) Check that there is no continuity between terminals with the warning switch OFF (float down).

(b) Check that there is continuity between terminals with the warning switch ON (float up).

If operation is not as specified, replace the switch.

Water Temperature Gauge System

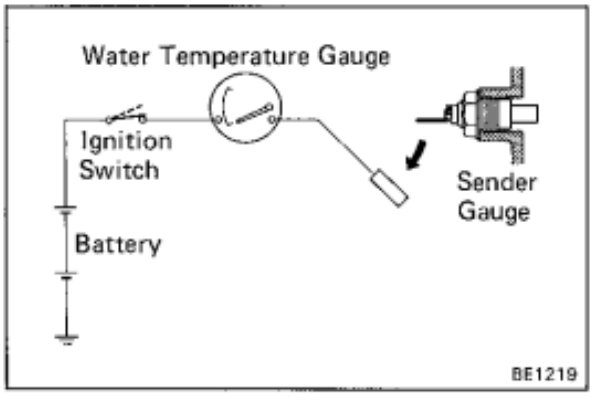

1. INSPECT RECEIVER GAUGE (Operation)

(a) Disconnect the connector from the sender gauge.

(b) Turn the ignition switch ON, check that the receiver gauge needle indicates COOL.

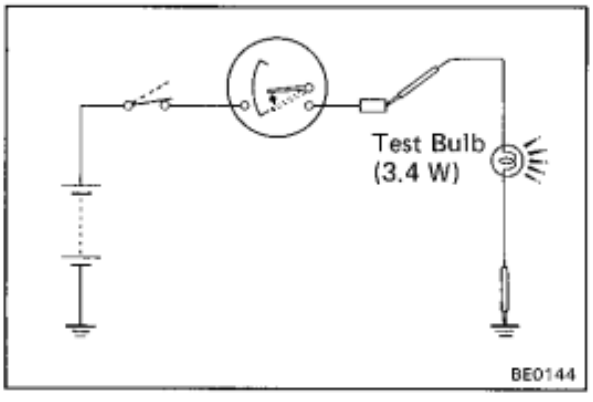

(c) Ground terminal on the wire harness side connector through a 3.4 W test bulb.

(d) Turn the ignition switch ON, check that the bulb lights up and the receiver gauge needle moves to the hot side.

If operation is as specified, replace the sender gauge. Then, recheck the system.

If operation is not as specified, measure the receiver gauge resistance.

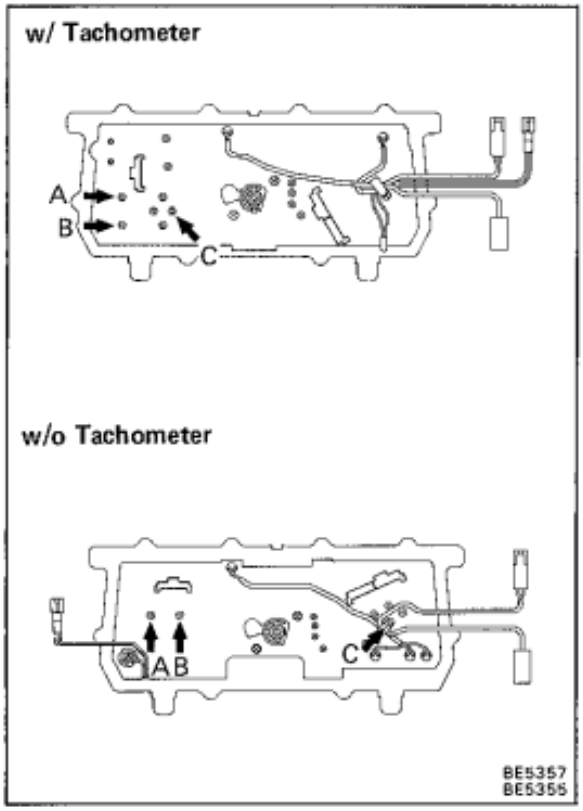

(Resistance)

Measure the resistance between terminals.

Between terminals	Resistance (Ω)
A — B	Approx. 25

If resistance value is not as specified, replace the receiver gauge.

(Meter circuit)

Check that there is continuity between terminals B and C.

If continuity is as specified, inspect voltage Regulator (See page BE-59).

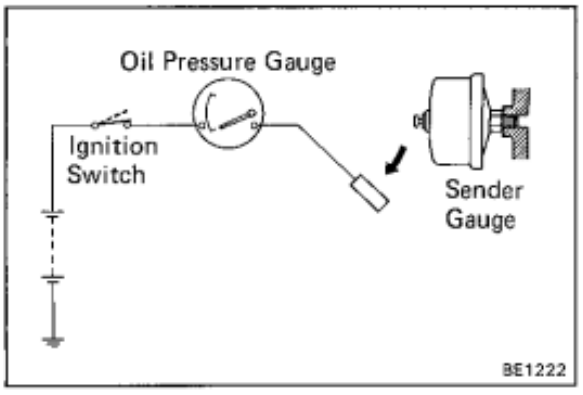

Oil Pressure Gauge System

1. **INSPECT RECEIVER GAUGE**

(Operation)

(a) Disconnect the connector from the sender gauge.

(b) Turn the ignition switch ON, check that the receiver gauge needle indicates to the low.

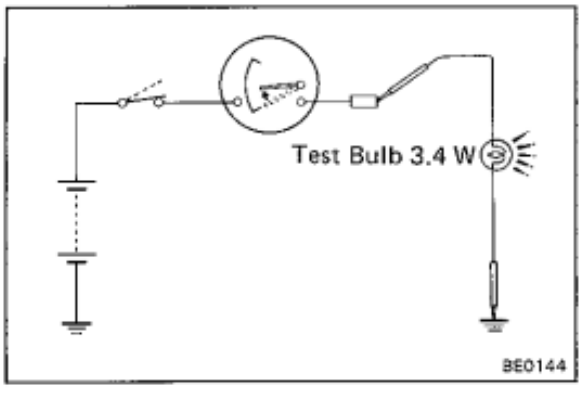

(c) Ground the terminal on the wire harness side through a 3.4 W test bulb.

(d) Turn the ignition switch ON, check that the bulb lights and the receiver gauge needle moves to the high side.

If the operation is not as specified, measure the receiver gauge resistance.

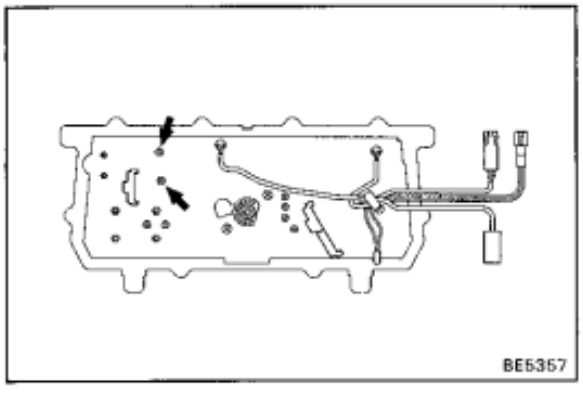

(Resistance)

HINT: The number in brackets ( ) applies to 24 V vehicles.

Measure the receiver gauge resistance between terminals.

Resistance: Approx. 25 (44) Ω

If resistance value is not as specified, replace the receiver gauge.

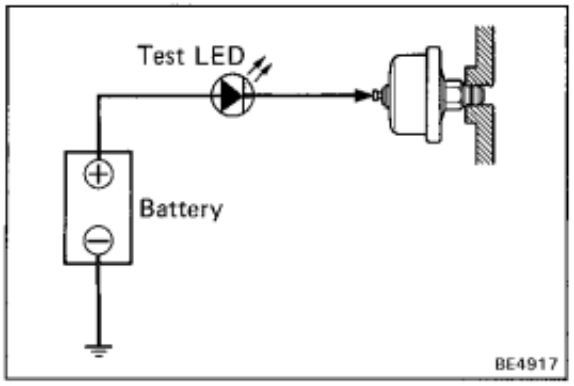

2. INSPECT SENDER GAUGE

(a) Disconnect the connector from the sender gauge.

(b) Apply battery voltage to the sender gauge terminal through a test LED.

(c) Check that the bulb does not light when the engine is stopped.

(d) Check that the LED flashes when the engine is running. The number of flashes should vary with engine speed.

If operation is not as specified, replace the sender gauge.

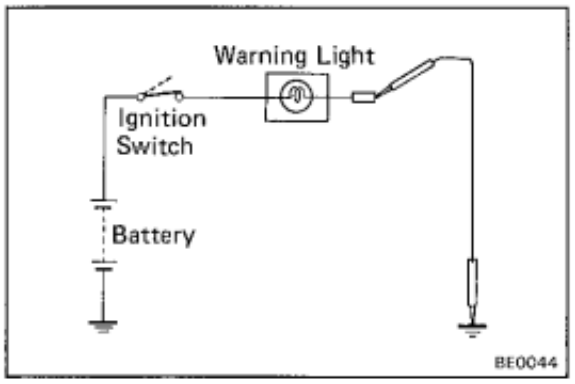

Low Oil Pressure Warning System

1. INSPECT WARNING LIGHT

(a) Disconnect the connector from the warning switch and ground terminal on the wire harness side connector.

(b) Turn the ignition switch ON, check that the warning light lights up.

If the warning light does not light up, test the bulb.

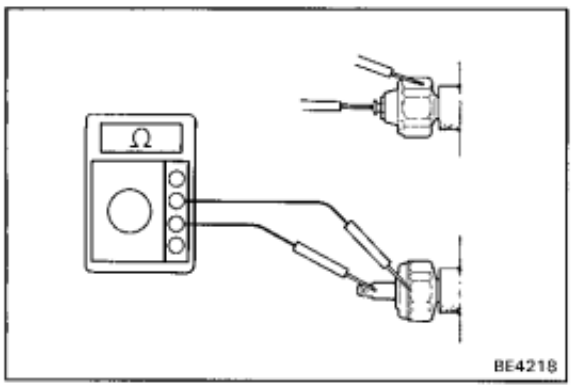

2. INSPECT LOW OIL PRESSURE WARNING SWITCH

(a) Disconnect the connector from the switch.

(b) Check that there is continuity between terminal and ground with the engine stopped.

(c) Check that there is no continuity between terminal and ground with the engine running.

HINT: Oil pressure should be over 0.5 kg/cm² (7.1 psi, 49 kPa)

If operation is not as specified, replace the switch.

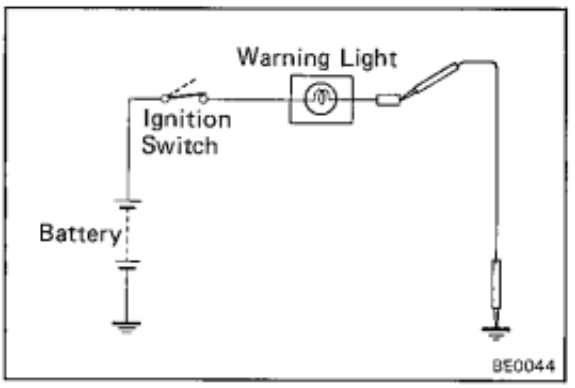

Parking Brake Warning System

1. INSPECT WARNING LIGHT

(a) Disconnect the connector from the parking brake switch and ground terminal on the wire harness side connector.

(b) Turn the ignition switch ON, check that the warning light lights up.

If the warning light does not light up, test the bulb.

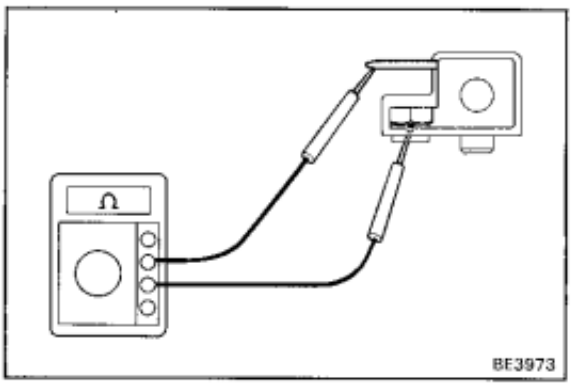

2. INSPECT PARKING BRAKE SWITCH

(a) Check that there is continuity between terminals with the switch ON (switch pin released).

(b) Check that there is no continuity between terminals with the switch OFF (switch pin pushed in).

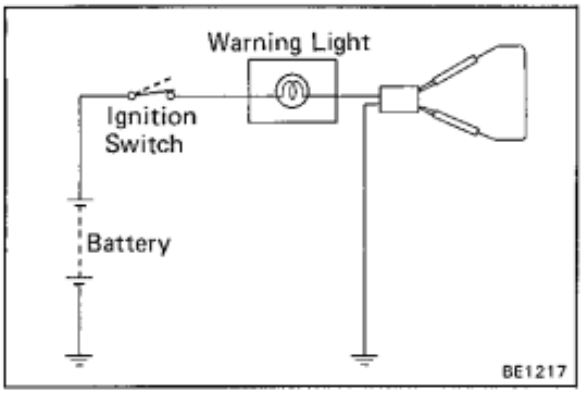

Brake Warning System

1. INSPECT WARNING LIGHT

(a) (w/o Parking Brake Warning System)

Disconnect the connectors from the level warning switch, parking brake switch and (Diesel Engine) vacuum warning switch.

(w/ Parking Brake Warning System)

Disconnect the connectors from the level warning switch and (Diesel Engine) vacuum warning switch.

(b) Connect terminals on the wire harness side connector of the level warning switch connector.

(c) Turn the ignition switch ON, check that the warning light lights up.

If the warning light does not light up, test the bulb.

2. INSPECT SWITCHES

(Parking Brake Switch: w/o Parking Brake Warning System)

See step 2 on page BE-63.

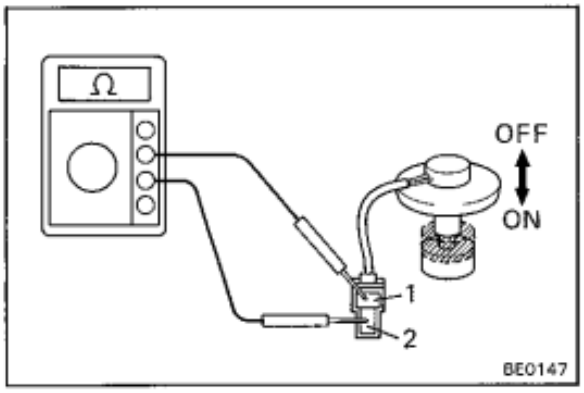

(Brake Fluid Level Warning Switch)

(a) Check that there is no continuity between terminals with the switch OFF (float up).

(b) Check that there is continuity between terminals with the switch ON (float down).

If operation is not as specified, replace the switch.

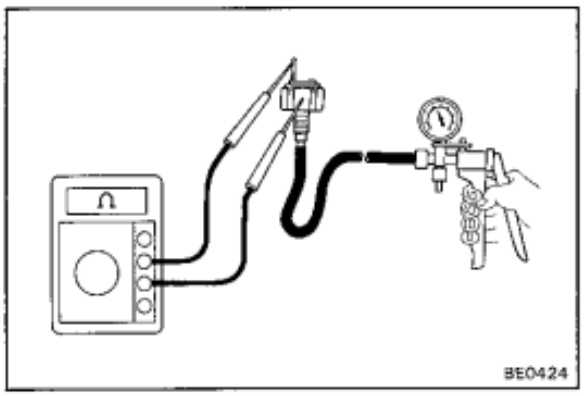

(Vacuum Warning switch: Diesel Engine)

(a) Check that there is continuity between terminal and the switch body with a no vacuum.

(b) Apply 200 ± 40 mmHg (7.87 ± 1.57 in.Hg, 26.7 ± 5.3 kPa) of pressure.

(c) Check that there is no continuity between terminal and the switch body.

If operation is not as specified, replace the switch.

3. INSPECT RELAY

(Bulb Check Relay: Australia/Continuity)

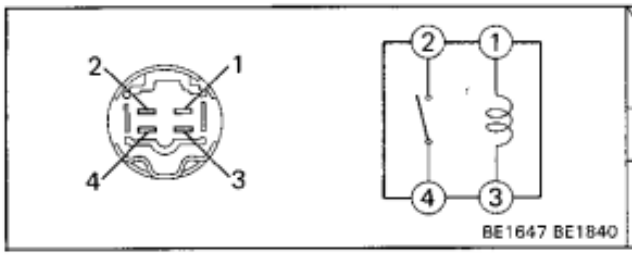

Terminal / Condition	1	2	3	4
Constant	○	∿∿	○	
Apply battery voltage to terminals 1 and 3.		○		○

If continuity is not as specified, replace the relay.

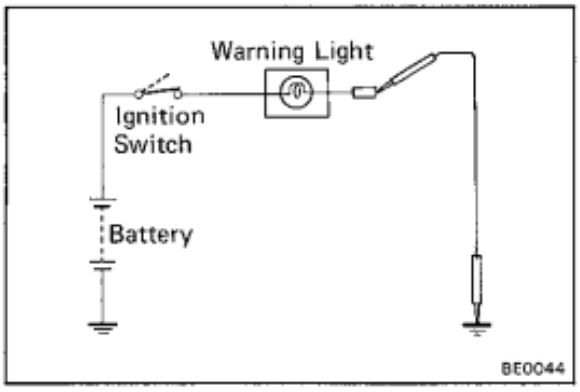

Open Door Warning System

1. **INSPECT WARNING LIGHT**

(a) Disconnect the connector from the door courtesy switch and ground terminal on the wire harness side connector.

(b) Turn the ignition switch ON, check that the warning light lights up.

If the warning light does not light up, test the bulb.

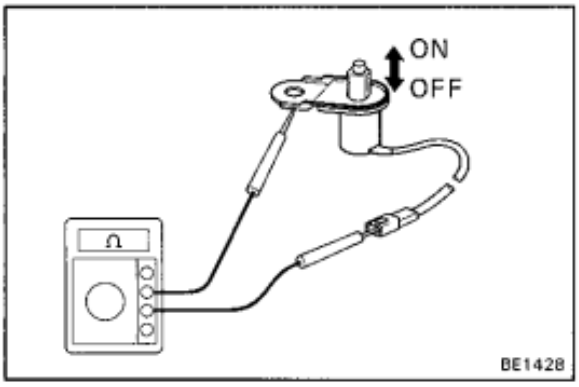

2. **INSPECT COURTESY SWITCH**

(a) Check that there is continuity between terminal and the switch body with the ON (switch pin released: opened door).

(b) Check that there is no continuity between terminal and the switch body with the OFF (switch pin pushed in: closed door).

If operation is not as specified, replace the switch.

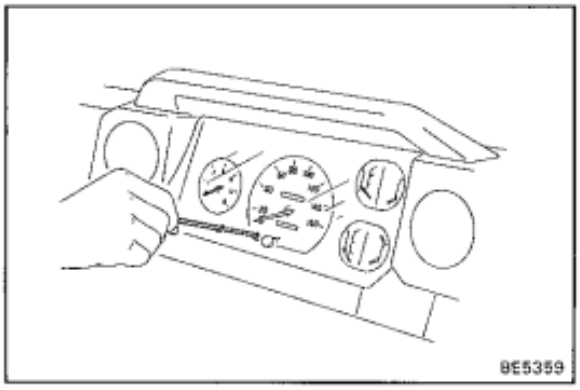

Timing Belt Warning System

1. **INSPECT WARNING LIGHT**

(a) Turn the ignition switch ON, check that the warning light lights up.

If the warning light does not light up, test the bulb.

(b) When the engine starts, check that the warning light goes out.

HINT: If the warning light does not go out, push the reset switch switch.

If the warning light does not go out, inspect the warning reset switch.

(c) Check that the warning light lights up when the reset switch is pressed during engine operation.

(d) Press the reset switch again and check that the warning light goes out.

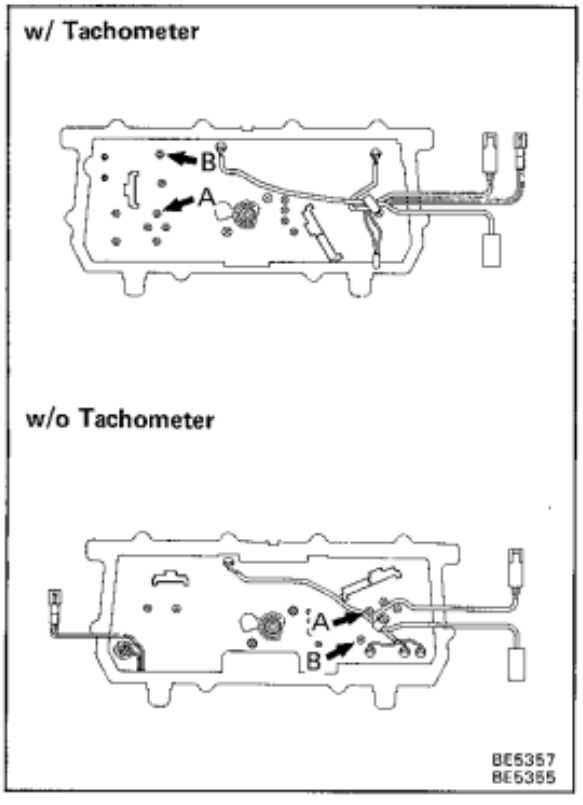

2. **INSPECT WARNING RESET SWITCH**

Check that each time the reset switch is pressed that there alternately is, then is not, continuity between A and B.

HINT: After inspection, always perform installation when there is no continuity and check that the warning light does not light up.

If operation is not as specified, replace the speedometer assembly.

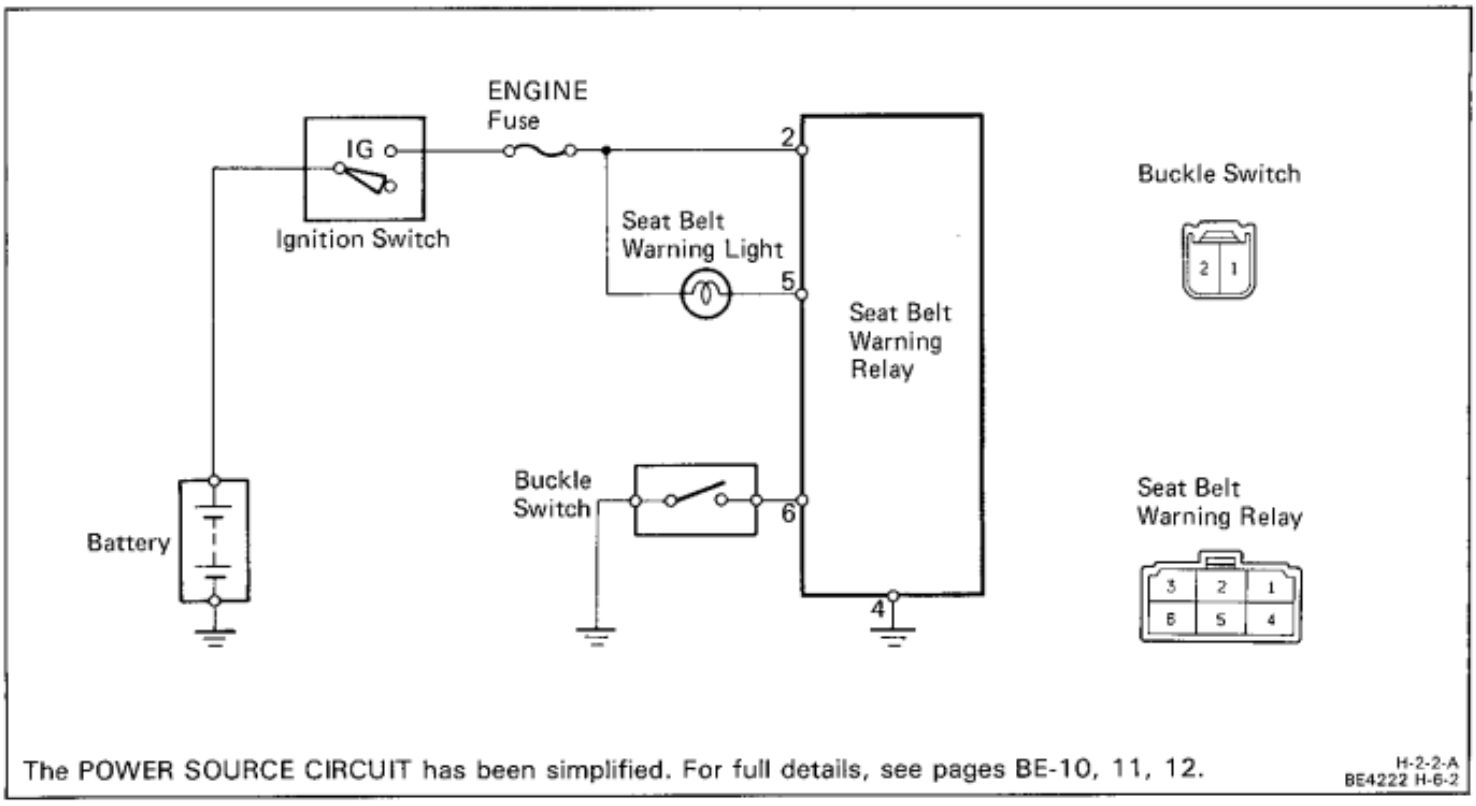

The POWER SOURCE CIRCUIT has been simplified. For full details, see pages BE-10, 11, 12.

H-2-2-A
BE4222 H-6-2

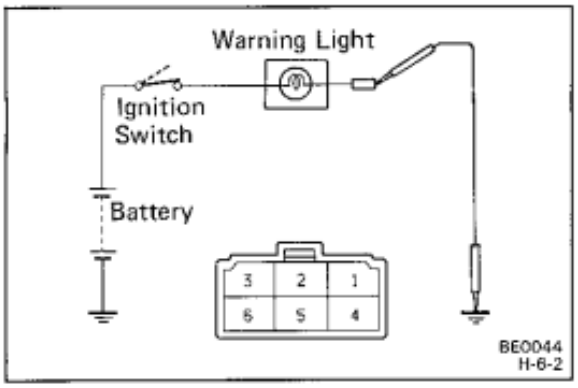

1. INSPECT WARNING LIGHT

(a) Disconnect the connector from the seat belt warning relay.

(b) Ground terminal 5 on the wire harness side connector.

(c) Turn the ignition switch ON, check that the warning light lights up.

If the warning light does not light, test the bulb.

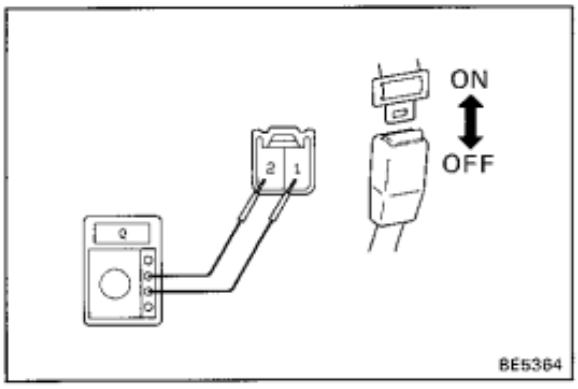

2. INSPECT BUCKLE SWITCHES

(a) Check that there is no continuity between terminals with the switch ON (belt unfastened).

(b) Check that there is continuity between terminals with the switch OFF (belt fastened).

If operation is not as specified, replace the seat belt inner.

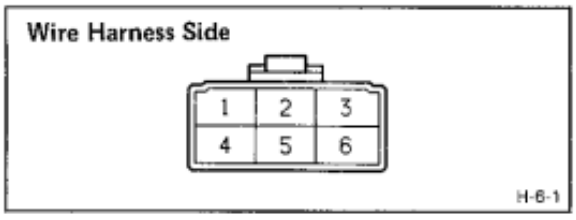

3. **INSPECT SEAT BELT RELAY**
(Relay Circuit)

Disconnect the connector from the relay and inspect the connector on the wire harness side as shown in the chart.

Check for	Tester connection	Condition		Specified Value
Continuity	4 — Ground	Constant		Continuity
	6 — Ground	Buckle switch position	OFF (Belt fastened)	No continuity
			ON (Belt unfastened)	Continuity
Voltage	2 — Ground	Ignition switch position	LOCK or ACC	No voltage
			ON	Battery voltage
	5 — Ground	Ignition switch position	LOCK or ACC	No voltage
			ON	Battery voltage

If circuit is as specified, replace the relay.

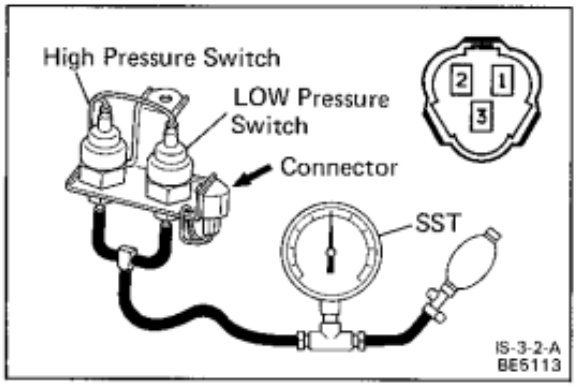

Turbo Indicator and Warning System

1. **INSPECT INDICATOR AND WARNING LIGHT OPERATION**
(Refer to EM Section of ENGINE Repair Manual)

2. **INSPECT PRESSURE SWITCH OPERATION**

(a) At the 3-way union, disconnect the pressure hose from the compressor elbow and connect a turbocharger pressure gauge (SST).

SST 09992-00241

(b) Check that the low and high pressure switch are continuity between terminal and ground as shown in the chart.

(High Pressure Switch)

Terminal and ground / Condition	1	Ground
No pressure	○	○
Apply 0.84 kg/cm² (11.9 psi, 82.4 kPa) of pressure		

(Low Pressure Switch)

Terminal and ground / Condition	2	Ground
No pressure	○	○
Apply 0.14 kg/cm² (2.0 psi, 13.7 kPa) of pressure		

If operation is not as specified, replace the switch.

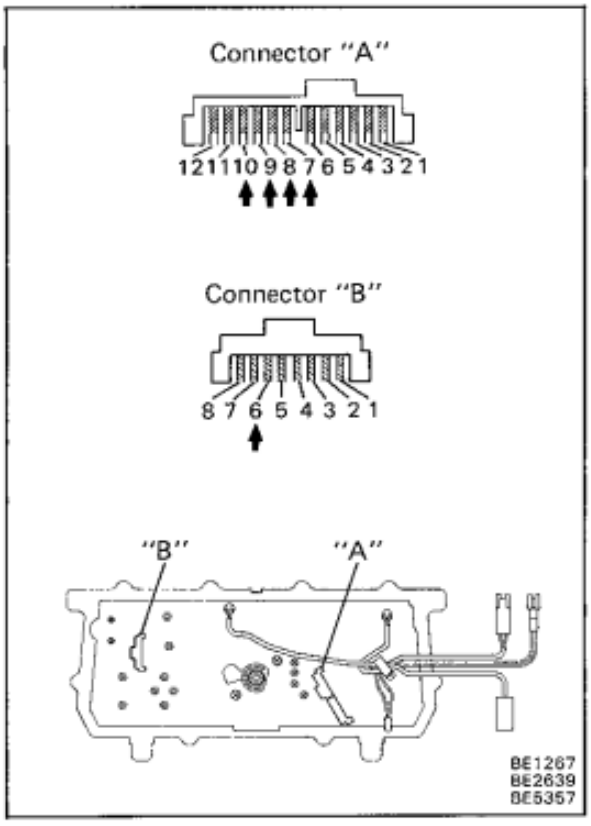

3. INSPECT TURBO INDICATOR AND WARNING LIGHT DRIVE CIRCUIT

(a) Remove the Combination meter.

(b) Connect the positive (+) lead and negative (—) lead from the battery to combination meter terminals as shown in the chart and check that the LED operation.

Positive (+) (Combination Meter Terminal)	Negative (—) (Combination Meter Terminal)	LED Condition	
		Green	Amber
(A-7)	(A-9, A-10, B-6)	OFF	OFF
(A-7)	(A-10, B-6)	ON	OFF
(A-7)	(B-6)	OFF	ON
(A-7)	(A-9, B-6)	OFF	ON
(A-7)	(A-8, B-6)	ON	ON

If operation is not as specified, replace the combination meter.

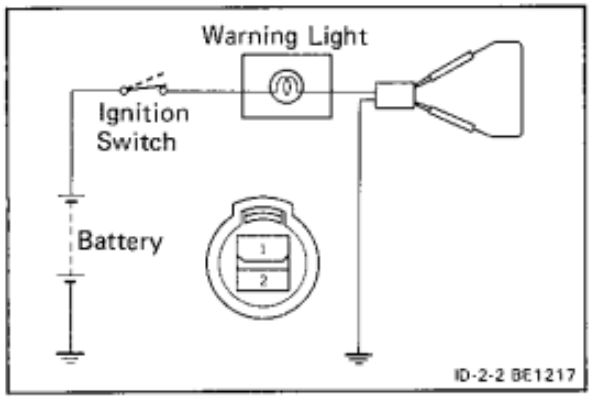

Air Cleaner Warning System

1. INSPECT WARNING LIGHT

(a) Disconnect the connector from the vacuum switch.

Connect the wire harness side connector terminals 1 and 2.

(b) Start the engine. Check that the bulb lights.

If the warning light does not light up, test the bulb.

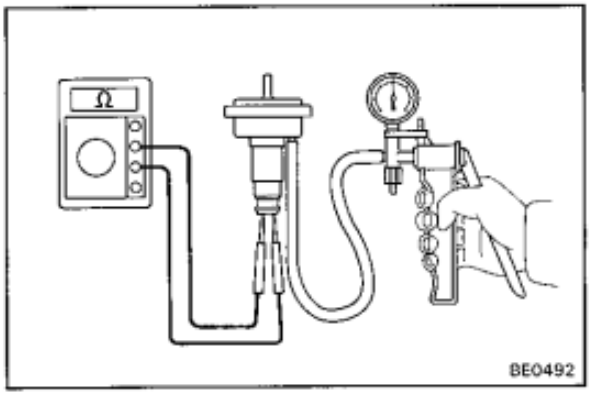

2. INSPECT VACUUM SWITCH

(a) With a vacuum of 29.4 ± 3.7 mmHg (1.157 ± 0.146 in.Hg, 3.9 ± 0.5 kPa) or above, check that there is continuity between terminals.

(b) Check that there is no continuity between terminals with no vacuum.

If operation is not as specified, replace the switch.

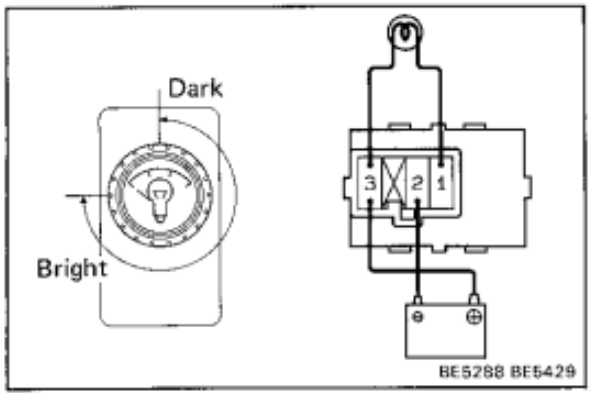

Meter Illumination Control System

INSPECT LIGHT CONTROL RHEOSTAT

(a) Connect terminals 1 and 3 through a 3.4 W test bulb.

(b) Connect the positive (+) lead from the battery to terminal 3 and the negative (—) lead to terminal 2.

(c) Gradually turn the rheostat knob to clockwise, check that the test bulb brightness changes from dark to bright.

If operation is not as specified, replace the rheostat.

Inner Ambient Temperature Sensor No. 1
(Instrument Panel Side)

Inner Ambient Temperature Sensor No. 2
(Roof or Back Panel Side)

Outer Ambient Sensor

GA-2-2-C
GA-3-1
1H-3-1

THERMOMETER SYSTEM

1. INSPECT INNER AND OUTER AMBIENT TEMPERATURE SENSOR

Measure the resistance between terminals 1 and 2

(Inner)

Temperature (°C)	−30	−20	−10	0	10	20	30	40	50	60	70
Resistance (kΩ)	6.24	3.68	2.25	1.41	0.42	0.61	0.41	0.29	0.20	0.15	0.11

(Outer)

Temperature (°C)	−30	−20	−10	0	10	20	30	40	50	60	70
Resistance (kΩ)	12.47	7.36	4.49	2.83	1.83	1.22	0.83	0.57	0.41	0.29	0.21

If resistance is not specified, replace inner or outer ambient temperature sensor.

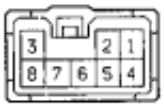

Connector "A"

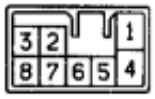

Connector "B"

S-8-2 GS-8-2

2. INSPECT ACCESSORY METER

Disconnect connectors from the accesory meter and inspect connectors on wire harness side as shown in the chart.

Check for	Tester connection	Condition		Specified value
Continuity	A-1 — Ground	Constant		Continuity
	B-8 — Ground	Constant		Continuity
Resistance	B-1 — B-4	Sensor temperature (Inner No.2)		See STEP 1 of Thermometer System on page BE-69
	B-2 — B-3	Sensor temperature (Inner No.1)		
	B-5 — B-6	Sensor temperature (Outer)		
Voltage	A-3 — Ground	Light control switch position	OFF	No voltage
			TAIL or HEAD	Battery voltage
	B-7 — Ground	Ignition switch position	OFF	No voltage
			ACC or ON	Battery voltage

If circuit is specified, replace the accessory meter.

If circuit is not specified, refer to step 1 of Thermometer System and inspect circuits connected to other parts.

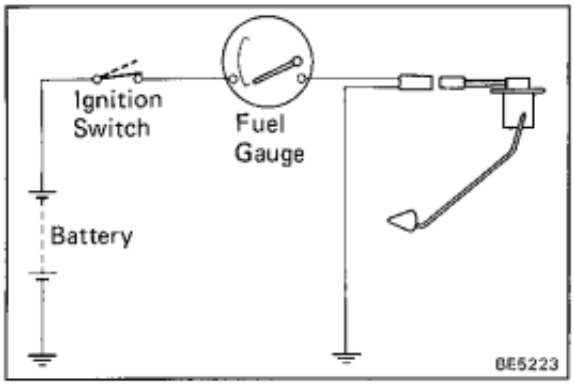

SUB FUEL GAUGE SYSTEM

1. INSPECT RECEIVER GAUGE

(Operation)

(a) Disconnect the connector from the sender gauge.

(b) Turn the ignition switch ON, check that the receiver geuge needle indicates EMPTY.

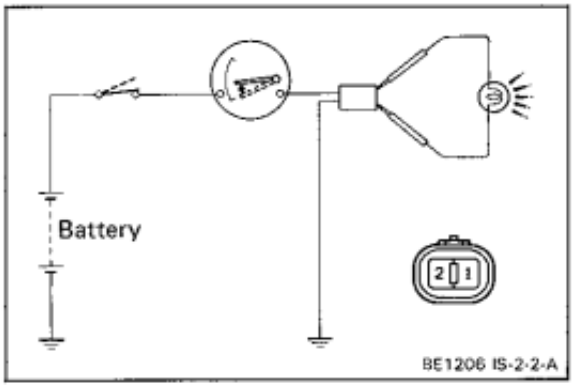

(c) Connect teminals 1 and 2 on the wire harness side connector through a 3.4 W test bulb.

(d) Turn the ignition switch ON, check that the bulb lights up and receiver gauge needle moves toward the full side.

HINT: Because of the silicon oil in the gauge, it will take a short time for the needle stabilize.

If operation is not as specifiedm inspect the receiver gauge resistance.

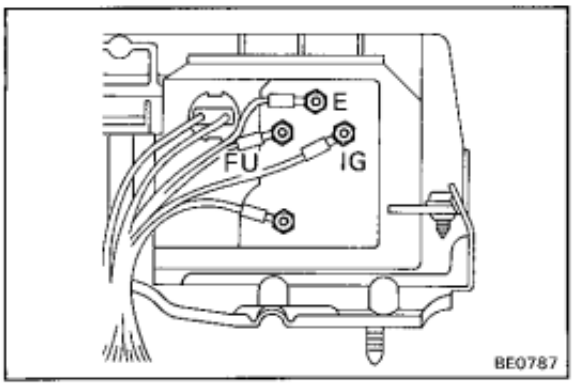

(Resistance)

Measure the resistance between terminals.

Between terminals	Resistance (Ω)
IG — FU	Approx. 86
FU — E	Approx. 155
IG — E	Approx. 241

If resistance velue is no as specified, replace the receiver gauge.

2. INSPECT SENDER GAUGE

(Operation)

(a) Connect a series of three 1.5 V dry cell batteries.

(b) Connect the positive (+) lead from the dry cell batteries to terminal 2 athrough 2.4 W test bulb and the negaive (−) lead to teminal 1.

(c) Check that the voltage reises between teminals 1 and 2 as the float is moved from the top to bottom position.

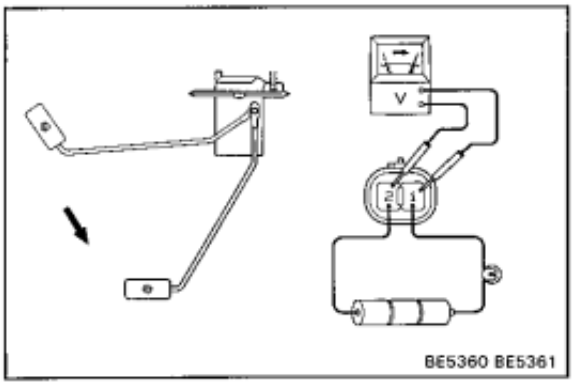

(Resistance)

Measure the resistance between termianls 1 and 2 for each flat position.

Float position mm (in.)		Resistance (Ω)
F	Approx. 76.7 (3.020)	Approx. 3
E	Approx. 302.4 (11.905)	Approx. 110

If resistance value is not as specified, replace the sender gauge.

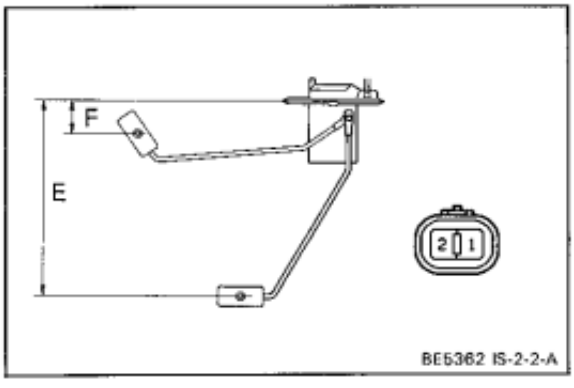

DEFOGGER SYSTEM

Parts Location

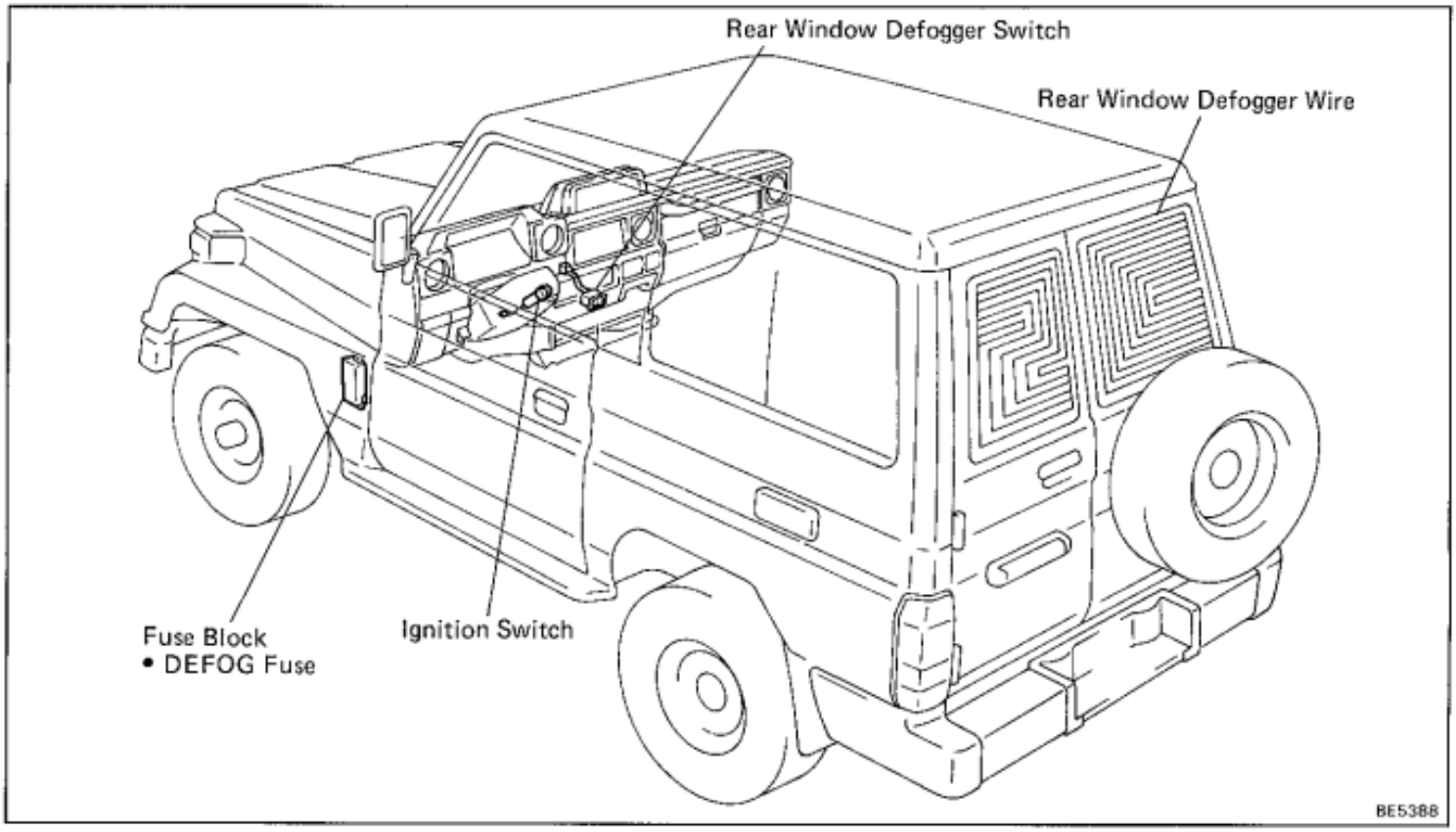

Wiring and Connector Diagrams

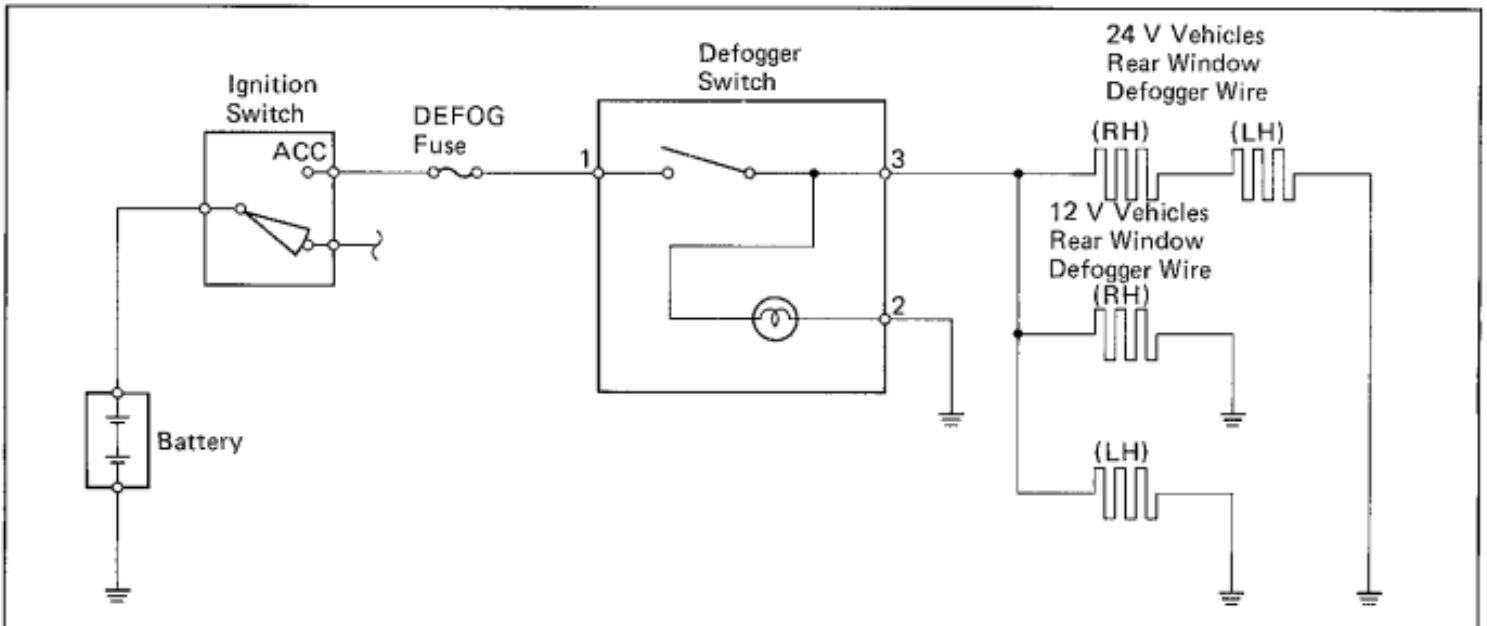

The POWER SOURCE CIRCUIT has been simplified. For full details, see pages BE-10, 11, 12.

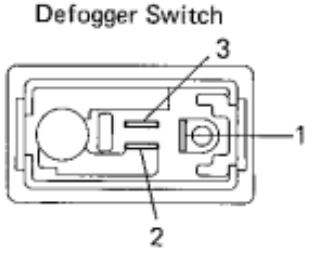

BE5365
BE0712

Troubleshooting

Problem	Possible cause	Remedy	Page
Rear window defogger system do not operate	DEFOG fuse blown	Replace fuse and check for short	BE-3
	Defogger switch faulty	Check switch	BE-72
	Defogger wire broken	Check wires	BE-72
	Wiring or ground faulty	Repair as necessary	

Parts Inspection

1. **INSPECT DEFOGGER SWITCH (Continuity)**

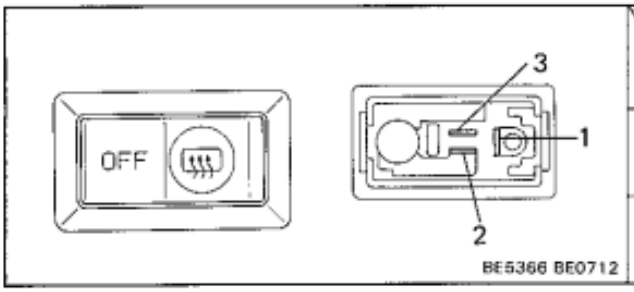

Terminal / Switch position	1	2	3
OFF		○	○
ON	○	○	○

If continuity is not as specified, check the bulb or replace the switch.

2. **INSPECT DEFOGGER WIRES**

NOTICE:

- **When cleaning the glass, use a soft, dry cloth, and wipe the glass in the direction of the wire. Take care not to damage the wires.**
- **Do not use detergents or glass cleaners with abrasive ingredients.**
- **When measuring voltage, wind a piece of tin foil around the top of the negative (–) probe and press the foil against the wire with your finger as shown.**

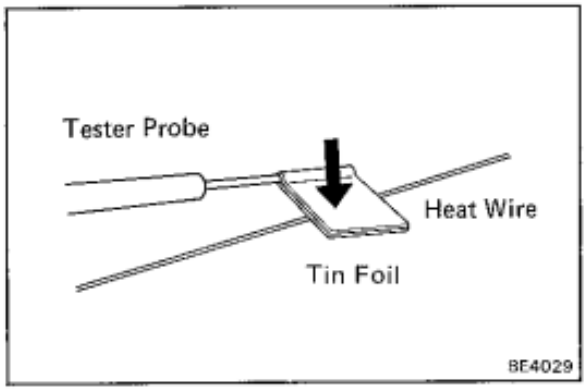

(Wire Breakage)

(a) Turn the ignition switch ON.

(b) Push in the defogger switch.

(c) Inspect the voltage at the center of each heat wire as shown.

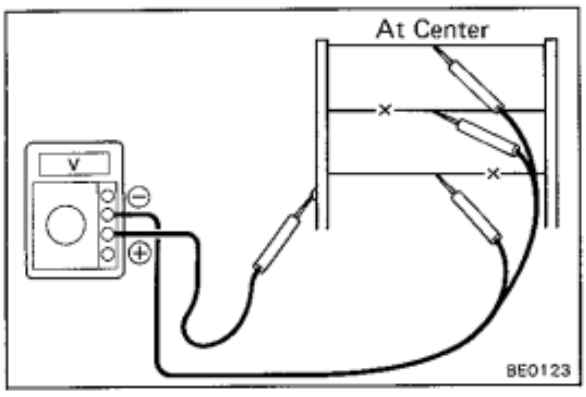

Voltage	Criteria
Approx. 5 V	Okey (No break in wire)
Approx. 10 V or 0 V	Broken wire

HINT: If there is 10 V, the wire is broken between the center of the wire and positive (+) end. If there is no voltage, the wire is broken between the center of the wire and ground.

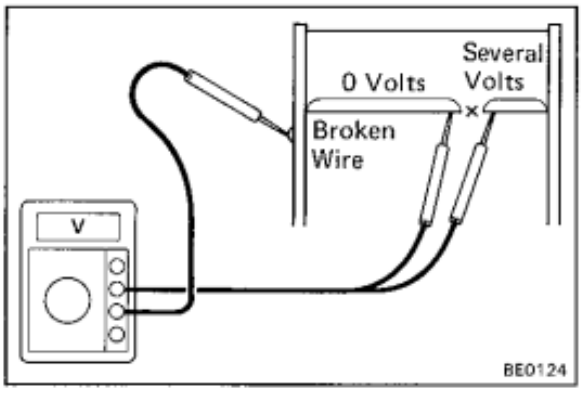

(Wire Breakage Point)

(a) Place the voltmeter positive (+) lead against the defogger positive (+) terminal.

(b) Place the voltmeter negative (−) lead with the foil strip against the heat wire at the positive (+) terminal end and slide it toward the negative (−) terminal end.

(c) The point where the voltmeter deflects from zero to several volts is the place where the heat wire is broken.

HINT: If the heat wire is not broken, the voltmeter indicates 0 volts at the positive (+) end of the heat wire but gradually increases to about 12 volts as the meter probe is moved to the other end.

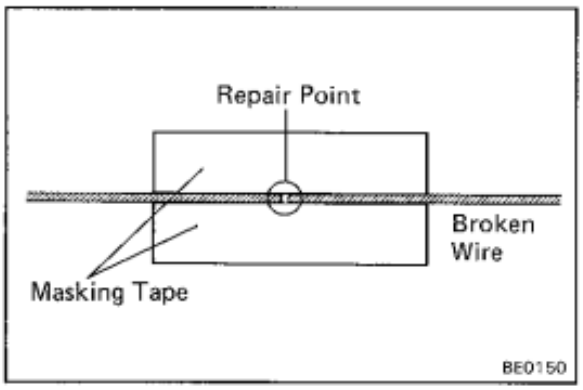

3. REPAIR DEFOGGER WIRES

(a) Clean the broken wire tips with a grease, wax and silicone remover.

(b) Place the masking tape along both sides of the wire to be repaired.

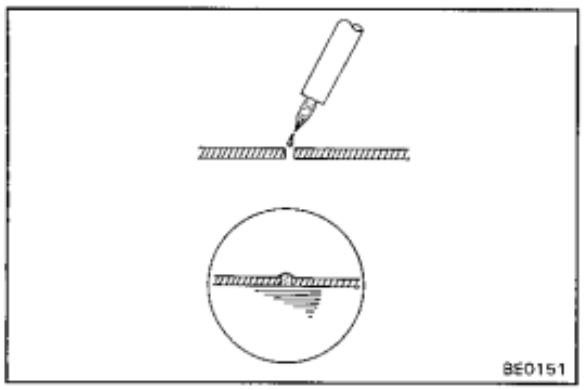

(c) Throughly mix the repair agent (Dupont paste No.4817 or equivalent).

(d) Using a fine tip brush, apply a small amount to the wire.

(e) After a few minutes, remove the masking tape.

(f) Allow the repair to stand at least 24 hours.

POWER WINDOW CONTROL SYSTEM

Parts Location

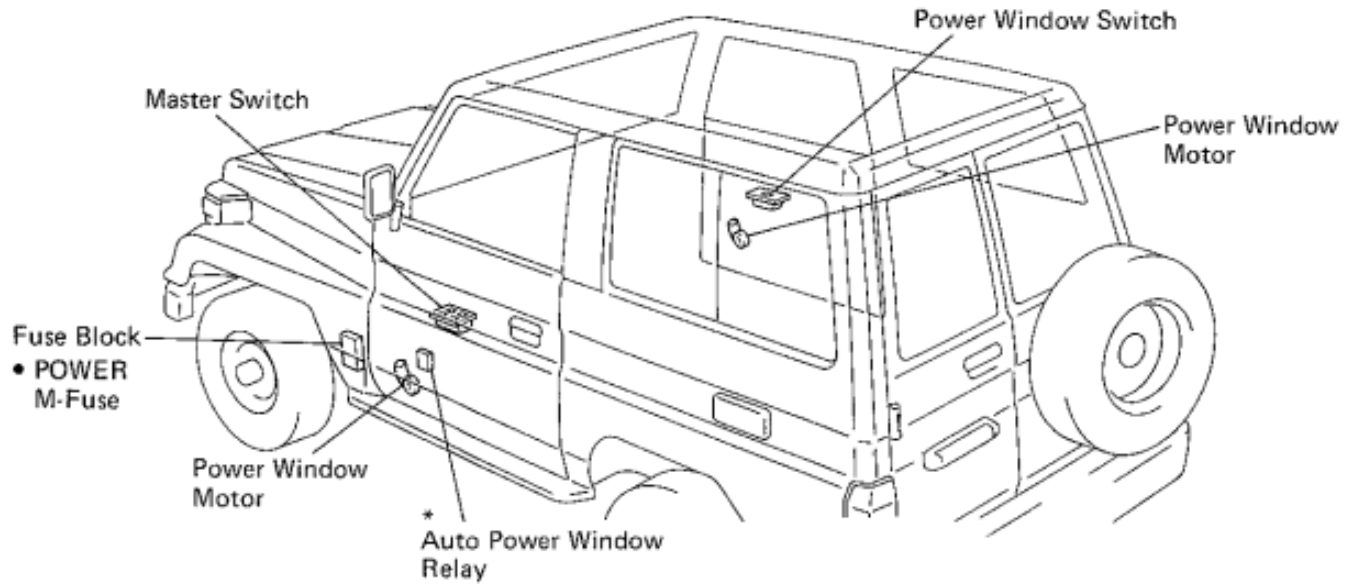

* Trim Type or Armrest Type (24 V)

BE5314

Wiring and Connector Diagrams

Trim Type

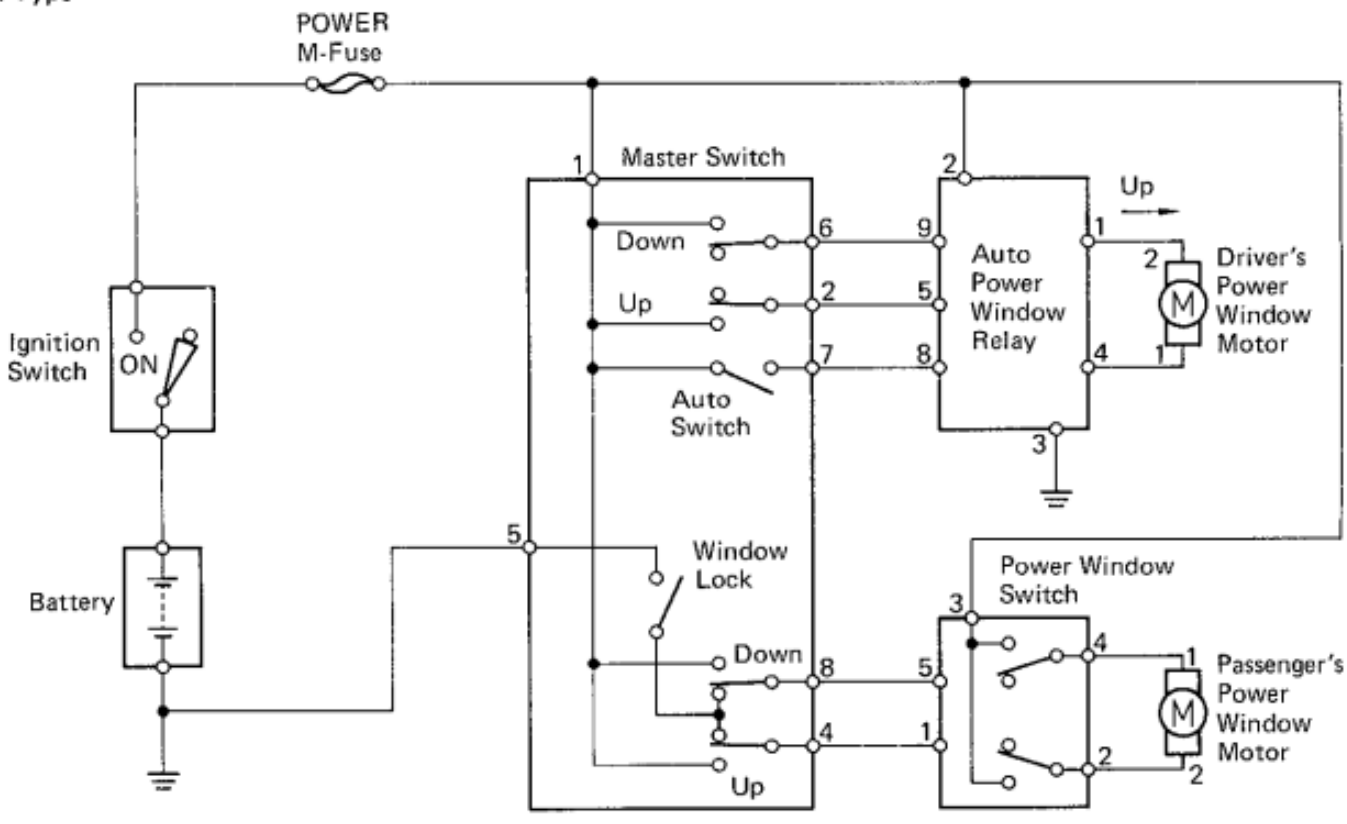

Master Switch

Power Window Switch

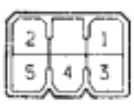

Auto Power Window Relay

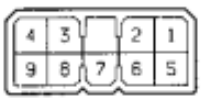

Power Window Motor

The POWER SOURCE CIRCUIT has been simplified. For full details, see pages BE-10, 11, 12.

BE5315

GA-8-2-A G-5-2 G-9-2 H-2-2

Armrest Type (24 V)

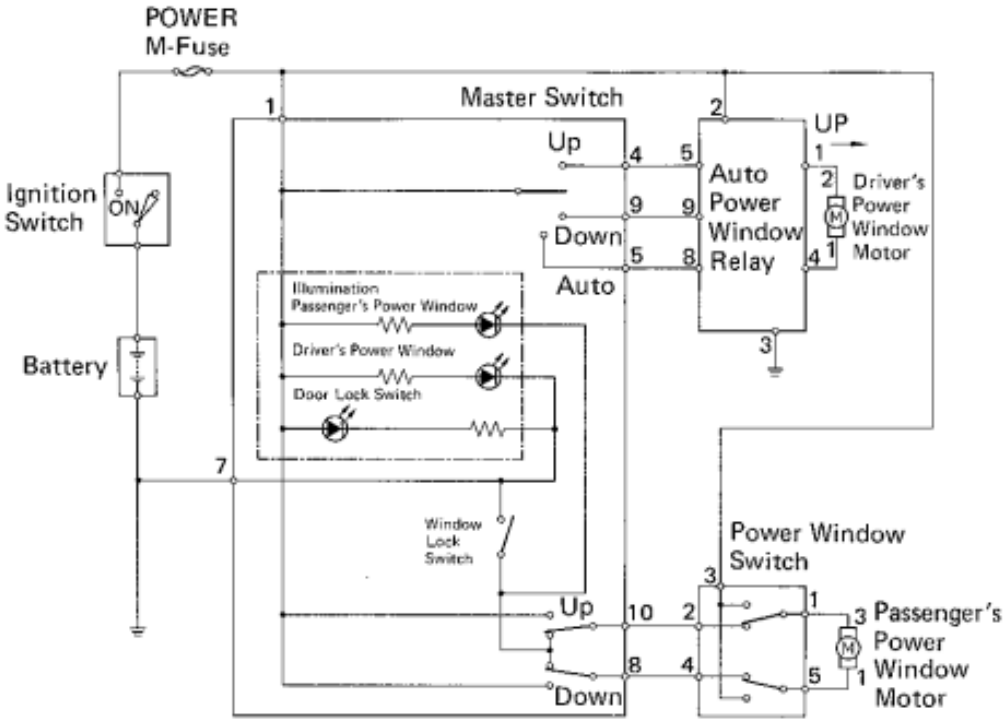

The POWER SOURCE CIRCUIT has been simplified. For full details, see pages BE-10, 11, 12.

Master Switch

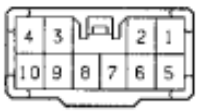

Power Window Switch

Auto Power Window Relay

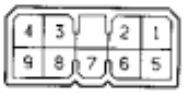

Power Window Motor

Armrest Type (12 V)

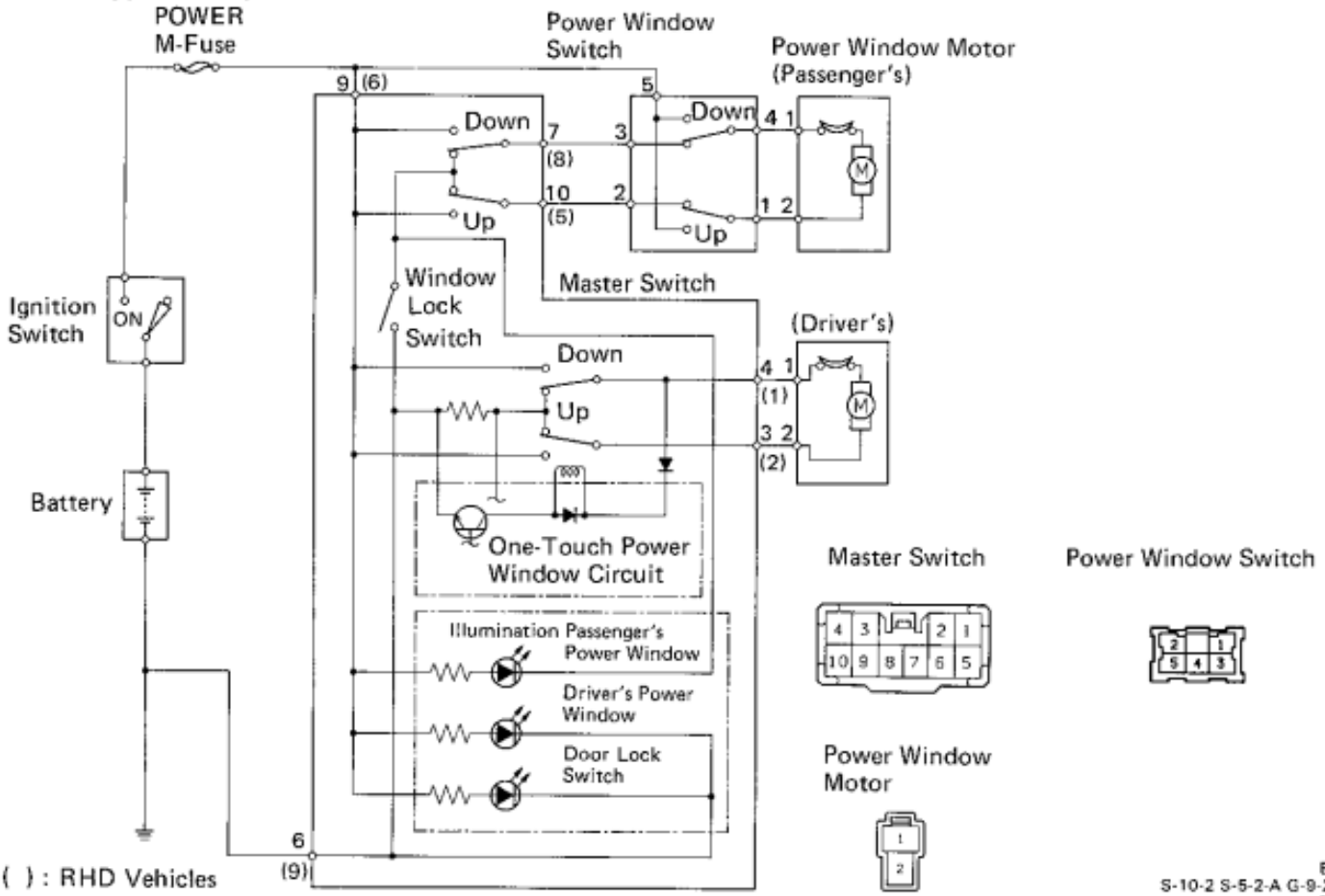

Master Switch

Power Window Switch

Power Window Motor

The POWER SOURCE CIRCUIT has been simplified. For full details, see pages BE-10, 11, 12.

BE5316
S-10-2 S-5-2-A G-9-2 H-2-2
BE5317
S-10-2 G-5-2-A
H-2-2

Troubleshooting

Problem	Possible cause	Remedy	Page
Power window does not operate at all	POWER fuse blown Wiring or ground faulty	Replace fuse and check for short Repair as necessary	BE-4
One-touch power window does not operate	Power window master switch faulty *Auto power window relay faulty *Wiring faulty	Check switch Check relay Repair as necessary	BE-76 BE-81
Driver's power window does not operate	Power window master switch faulty *Auto power window relay faulty Power window motor faulty Wiring faulty	Check switch Check relay Check motor Repair as necessary	BE-76 BE-81 BE-80
Passenger's power window does not operate	Power window switch faulty Power window master switch faulty Power window motor faulty Wiring faulty	Check switch Check switch Check motor Repair as necessary	BE-80 BE-76 BE-80

*: Trim Type or Armrest Type (24 V) Power Window Switch

Parts Inspection

1. **INSPECT SWITCHES (Master Switch/Continuity)**

Trim Type or Armrest Type (24 V)

Trim Type

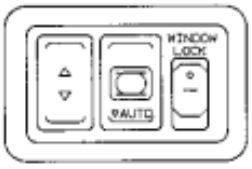

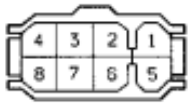

Armrest Type (24 V)

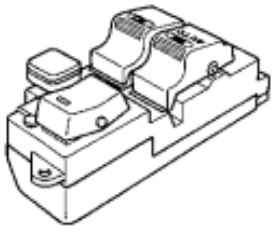

Connector "A"

Connector "B"

BE5318 GA-8-2-A
S-10-2
BE2877 GA-2-2-C

Window operation		Driver's				Passenger's			
Terminal	Trim Type	1	2	6	7	1	4	5	8
Switch position	Armrest Type (24 V)	1	4	9	5	1	10	7	8
Manual (Window unlock)	UP	○—○				○—○		○—○	
	OFF						○—○	○—○	
	DOWN	○———○				○————			○
Manual (Window lock)	UP	○—○				○—○			
	OFF								
	DOWN	○———○				○————			○
AUTO	OFF								
	DOWN	○———○———○							

If continuity is not as specified, replace the master switch.

Armrest type (12 V)

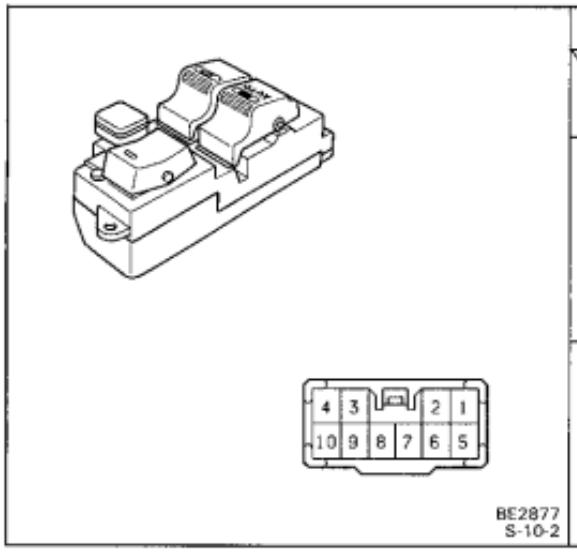

Window operation		Driver's				Passenger's			
Terminal	LHD	3	4	6	9	6	7	9	10
Switch position	RHD	2	1	9	6	9	8	6	5
Window unlock	UP	○		○	○	○	○	○	○
	OFF	○	○	○		○	○		○
	DOWN	○		○	○		○	○	
Window lock	UP	○		○	○			○	○
	OFF	○	○	○			○		○
	DOWN	○		○	○		○	○	

If continuity is not as specified, replace the switch.

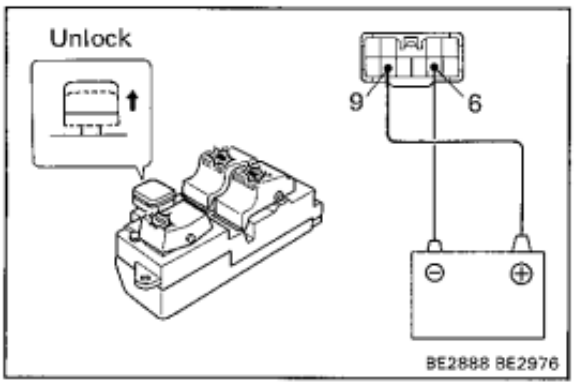

(Armrest Type Master Switch: Illumination)

LHD

(a) Set the window lock switch to the unlock position.

(b) Connect the positive (+) lead from the battery to terminal 9 and the negative (−) lead to terminal 6, check that all the illuminations light up.

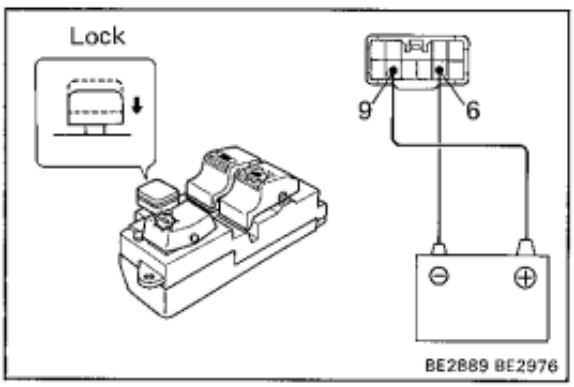

(c) Set the window lock switch to the lock position, check that all the passenger's power window switch illumination goes out.

If operation is not as specified, replace the master switch.

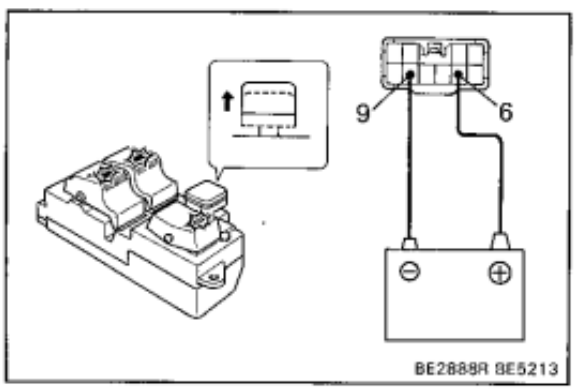

RHD

(a) Set the window lock switch to the unlock position.

(b) Connect the positive (+) lead from the battery to terminal 6 and the negative (−) lead to terminal 9, check that all the illuminations light up.

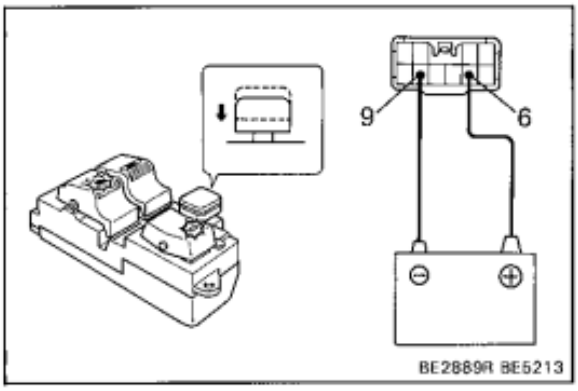

(c) Set the window lock switch to the lock position, check that the passenger's power window switch illumination goes out.

If operation is not as specified, replace the master switch.

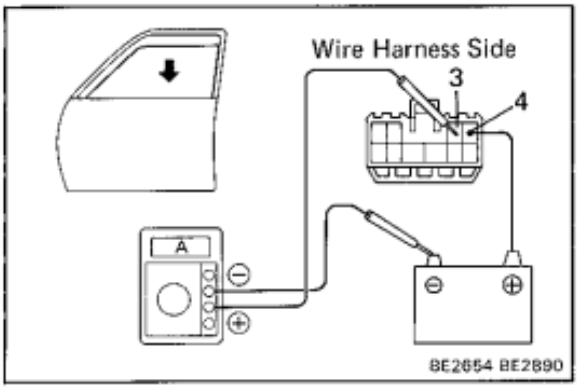

(Armrest Type Mastor Switch (12 V): One Touch Power Window System)

LHD

Inspection using an ammeter:

(a) Disconnect the connector from the master switch.

(b) Connect the positive (+) lead from the ammeter to terminal 3 on the wire harness side connector and the negative (—) lead to negative terminal of the battery.

(c) Connect the positive (+) lead from the battery to terminal 4 on the wire harness side connector.

(d) As the window goes down, check that the current flows approximately 7 A.

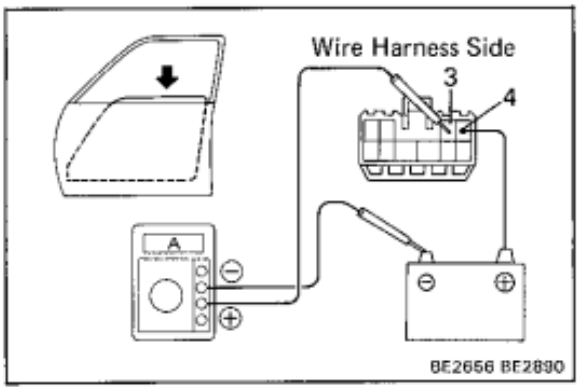

(e) Check that the current increases approximately 14.5 A or more when the window stops going down.

HINT: The circuit breaker opens some 4 — 40 seconds after the window stops going down, so the check must be made before the circuit breaker operates.

If operation is as specified, replace the master switch.

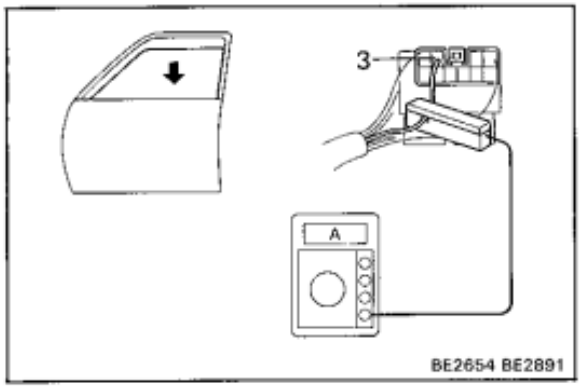

Inspection using an ammeter with a current-measuring probe:

(a) Remove the master switch with connector connected.

(b) Attach a current-measuring probe to terminal 3 of the wire harness.

(c) Turn the ignition switch ON and set the power window switch in the down position.

(d) As the window goes down, check that the current flows approximately 7 A.

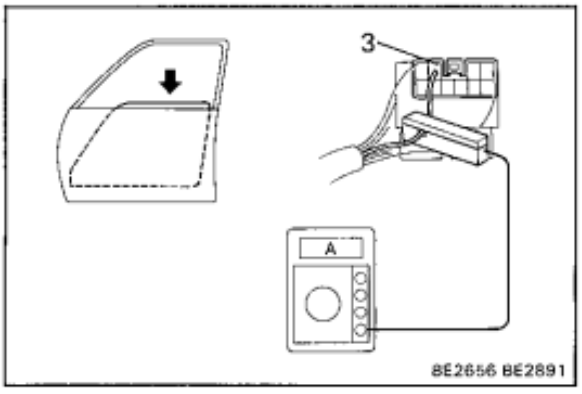

(e) Check that the current increases approximately 14.5 A or more when the window stops going down.

HINT: The circuit breaker opens some 4 — 40 seconds after the window stops going down, so that check must be made before the circuit breaker operates.

If operation is as specified, replace the master switch.

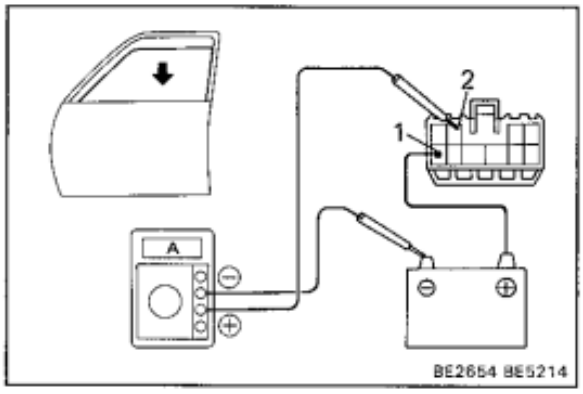

RHD

Inspection using an ammeter:

(a) Disconnect the connector from the master switch.

(b) Connect the positive (+) lead from the ammeter to terminal 2 on the wire harness side connector and the negative (—) lead to negative terminal of the battery.

(c) Connect the positive (+) lead from the battery to terminal 1 on the wire harness side connector.

(d) As the window goes down, check that the current flows approximately 7 A.

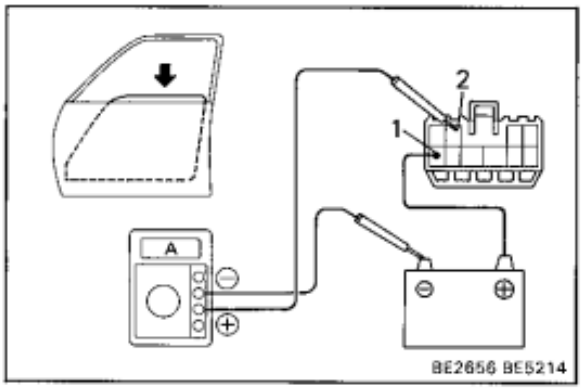

(e) Check that the current increases approximately 14.5 A or more when the window stops going down.

HINT: The circuit breaker opens some 4 — 40 seconds after the window stops going down, so the check must be made before the circuit breaker operates.

If operation is as specified, replace the master switch.

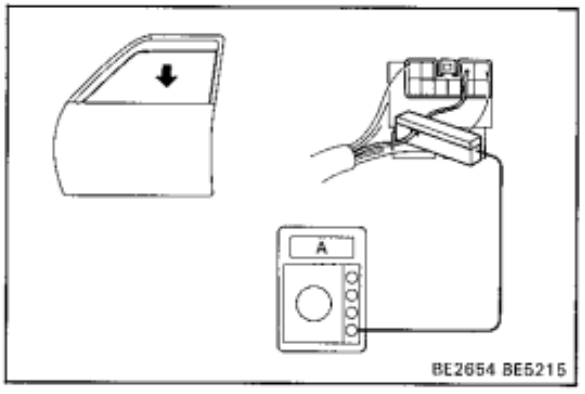

Inspection using an ammeter with a current-measuring probe:

(a) Remove the master switch with connector connected.

(b) Attach a current-measuring probe to terminal of the wire harness.

(c) Turn the ignition switch ON and set the power window switch in the down position.

(d) As the window goes down, check that the current flows approximately 7 A.

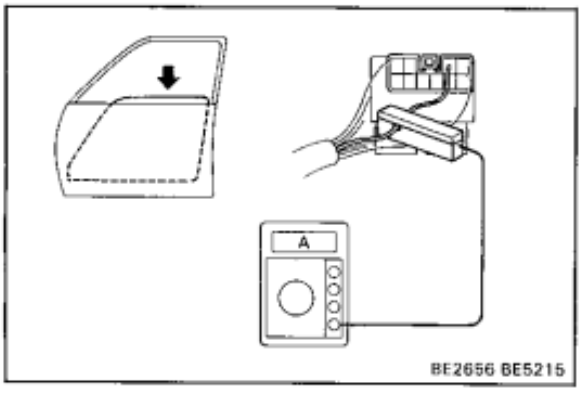

(e) Check that the current increases approximately 14.5 A or more when the window stops going down.

HINT: The circuit breaker opens some 4 — 40 seconds after the window stops going down, so that check must be made before the circuit breaker operates.

If operation is as specified, replace the master switch.

(Power Window Switch/Continuity)

Trim Type

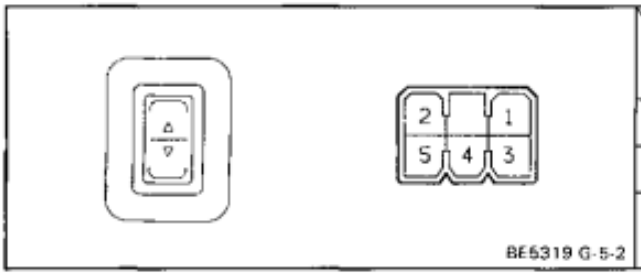

Terminal / Switch position	1	2	3	4	5
UP	○	○		○	○
OFF	○		○	○	○
DOWN	○		○		
		○			○

If continuity is not as specified, replace the switch.

Armrest Type

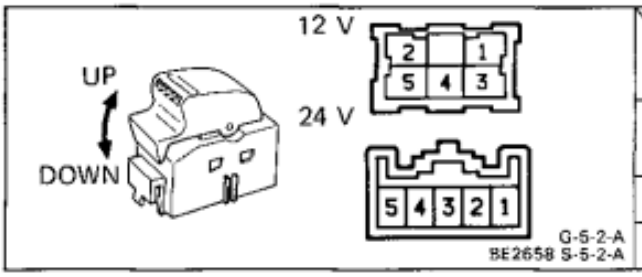

Terminal / Switch position	12 V / 24 V	1	2	3	4	5
	12 V	1	2	3	4	5
	24 V	1	2	4	5	3
UP		○				○
				○	○	
OFF		○	○	○	○	
DOWN		○	○		○	○

If continuity is not as specified, replace the switch.

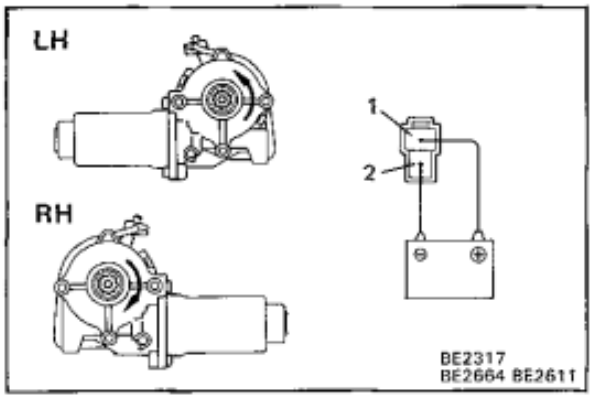

2. INSPECT POWER WINDOW MOTOR

(Motor Operation)

(a) Connect the positive (+) lead from the battery to terminal 1 and the negative (−) lead to terminal 2, check that the motor turns downward.

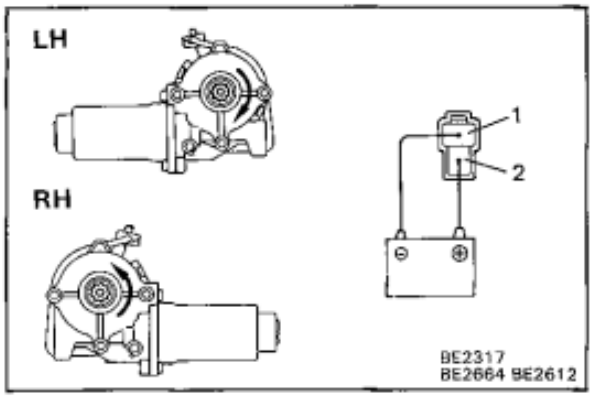

(b) Reverse the polarity, check that the motor turns upward.

If operation is not as specified, replace the motor.

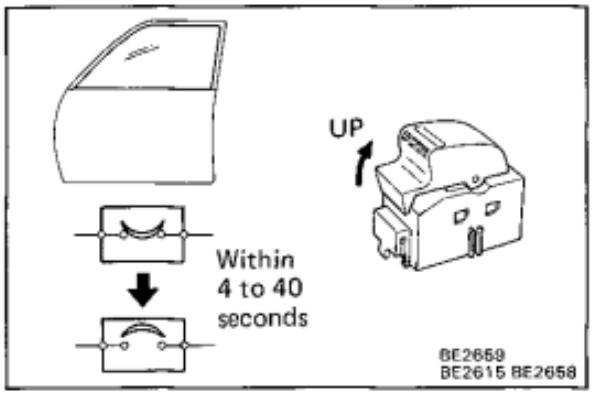

(Circuit Breaker/Operation)

(a) With the window in the full closed position, hold the power window switch in "UP" position and check that there is a circuit breaker operation noise within 4 to 40 seconds.

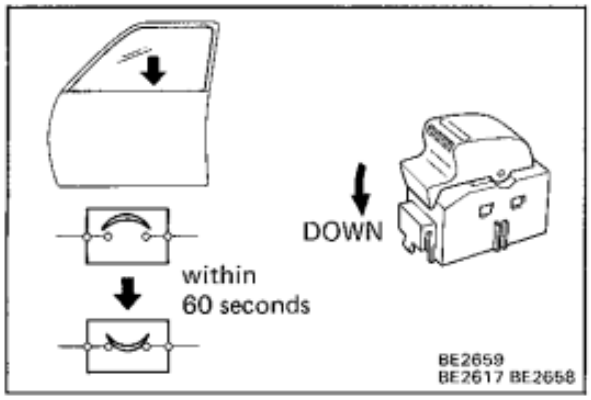

(b) With the window in the full closed position, hold the switch in "DOWN" and check that the window begins to descend within 60 seconds.

If operation is not as specified, replace the motor.

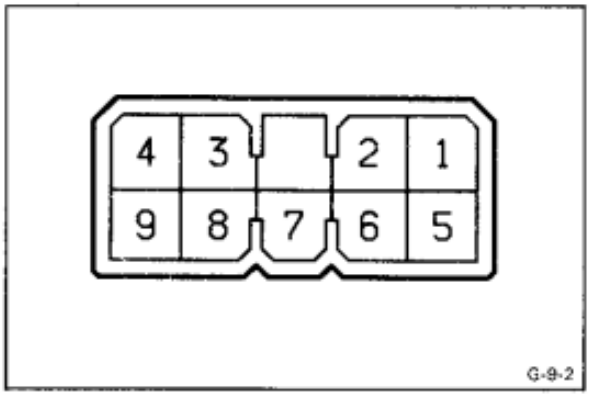

3. Trim Type or Armrest Type (24 V)
INSPECT AUTO POWER WINDOW RELAY

(Relay Circuit)

Disconnect the connector from the relay and inspect the connector on the wire harness side as shown in the chart.

Check for	Tester connection	Condition		Specified value
Continuity	1 — 4	Constant		Continuity
	3 — Ground	Constant		Continuity
Voltage	2 — Ground	Ignition switch position	LOCK or ACC	No voltage
			ON	Battery voltage
	5 — Ground	Master switch position when ignition switch turned ON (Driver's switch)	OFF or DOWN	No voltage
			UP	Battery voltage
	8 — Ground	Master switch position when ignition switch turned ON (AUTO switch)	OFF	No voltage
			DOWN	Battery voltage
	9 — Ground	Master switch position when ignition switch turned ON (Driver's switch)	OFF	No voltage
			DOWN	Battery voltage

If circuit is as specified, replace the relay.

POWER DOOR LOCK CONTROL SYSTEM

Parts Location

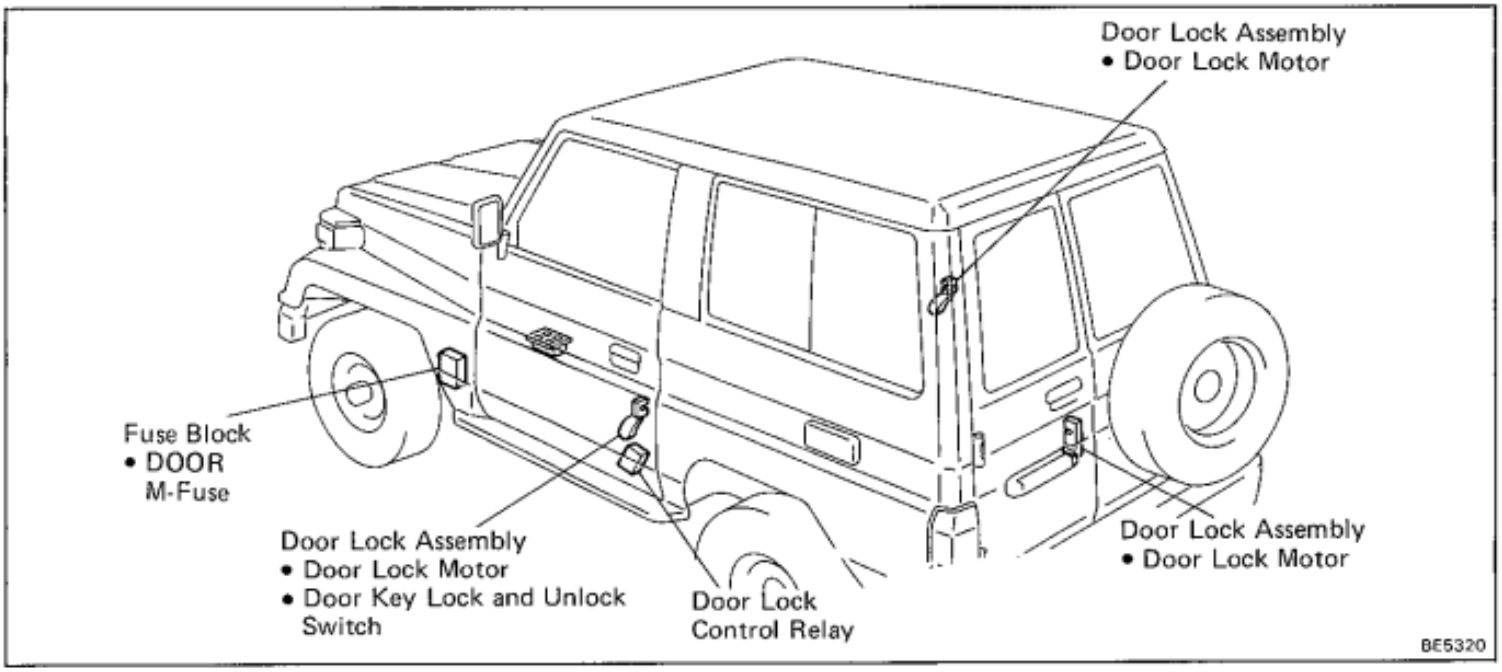

Wiring and Connector Diagrams

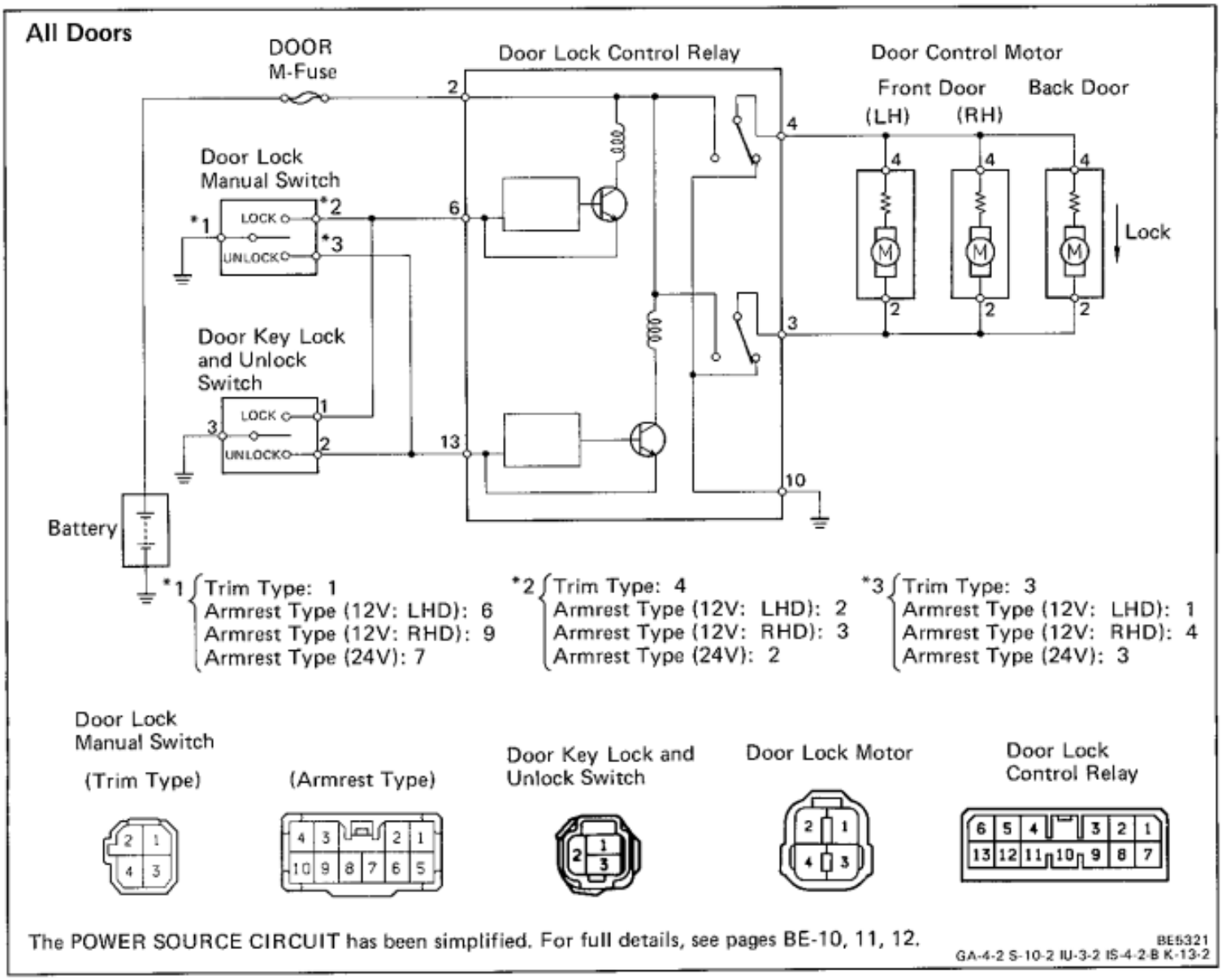

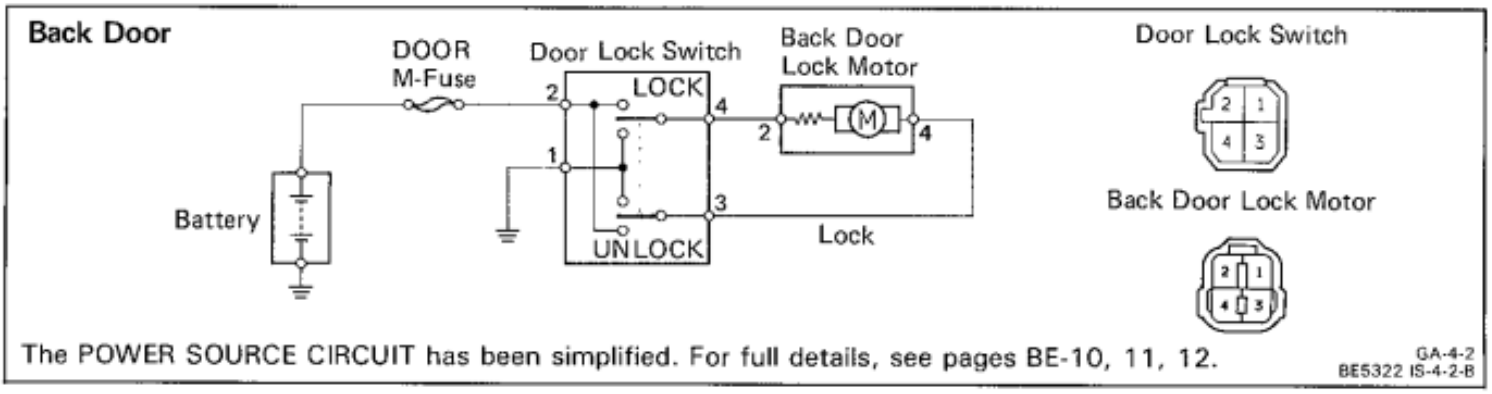

The POWER SOURCE CIRCUIT has been simplified. For full details, see pages BE-10, 11, 12.

Troubleshooting

Problem	Possible cause	Remedy	Page
Door lock system does not operate at all	DOOR fuse blown Door lock motor faulty Door lock control relay faulty Wiring or ground faulty	Replace fuse and check for short Check motor Check relay Repair as necessary	BE-4 BE-84 BE-86
Door lock system does not operate by manual switch	Door lock manual switch faulty Wiring faulty	Check switch Repair as necessary	BE-83
Door lock system does not operate by door key	Door key lock and unlock switch faulty Wiring faulty Door lock link disconnected	Check switch Repair as necessary Connect link	BE-84

Parts Inspection

1. **INSPECT SWITCHES (Door Lock Manual Switch/Continuity)**

Trim Type

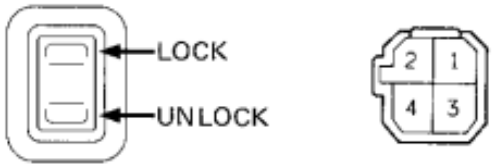

Terminal / Switch position	1	2	3	4
LOCK	○		○	
		○		○
OFF				
UNLOCK	○			○
		○	○	

If continuity is not as specified, replace the switch.

Armrest Type (12 V)

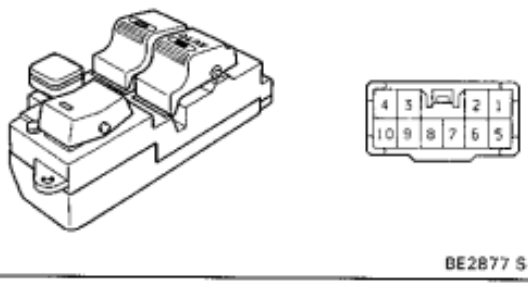

Terminal / Switch position		1	2	5	6
	LHD	4	3	10	9
	RHD				
LOCK		○		○	
			○		○
OFF					
UNLOCK		○			○
			○	○	

If continuity is not as specified, replace the switch.

Armrest Type (24 V)

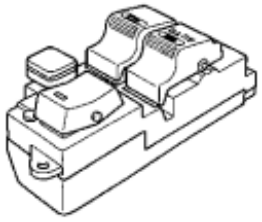

Terminal / Switch position	2	3	7
LOCK	○		○
OFF			
UNLOCK		○	○

If continuity is not as specified, replace the switch.

(Door Key Lock and Unlock Switch/Continuity)

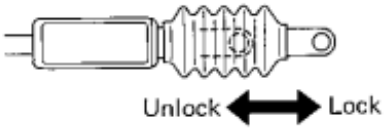

Terminal / Switch position	1	2	3
LOCK	○		○
OFF			
UNLOCK		○	○

If continuity is not as specified, replace the switch.

2. INSPECT DOOR LOCK MOTOR
(Motor Operation)

Front Door

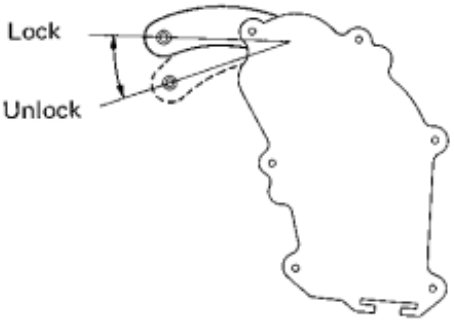

Back Door

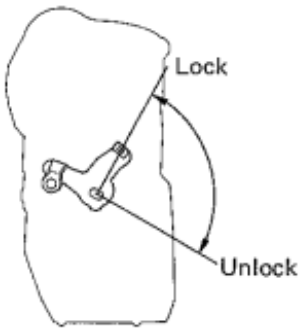

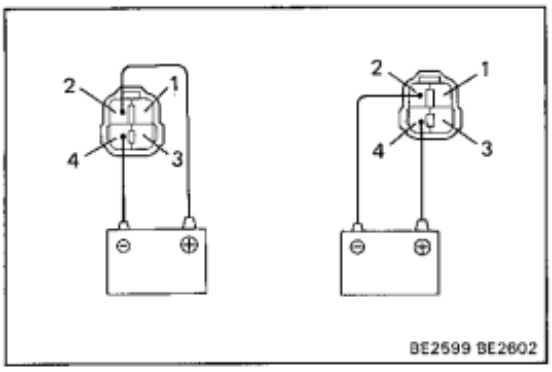

(a) Connect the positive (+) lead from the battery to terminal 2 and the negative (−) lead to terminal 4, check that the door lock link moves to UNLOCK position.

(b) Remove the polarity, check that the door lock link move to LOCK position.

If operation is not as specified, replace the door lock assembly.

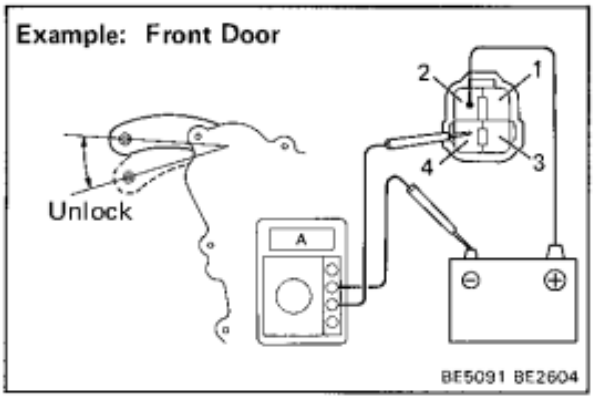

(PTC Thermistor Operation)

Inspection using an ammeter.

HINT: The number in brackets ( ) applies to 24 V vehicles.

(a) Connect the positive (+) lead from the battery to terminal 2.

(b) Connect the positive (+) lead from the ammeter to terminal 4 and the negative (−) lead to battery negative (−) terminal, check that the current changes from approx. 3.2 (2) A to less than 0.5 A with 20 to 70 seconds.

(c) Disconnect the leads from terminals.

(d) Approximately 60 seconds later, connect the positive (+) lead from the battery to terminal 4 and the negative (−) lead to terminal 2 check that the door lock moves to LOCK position.

If operation is not as specified, replace the door lock assembly.

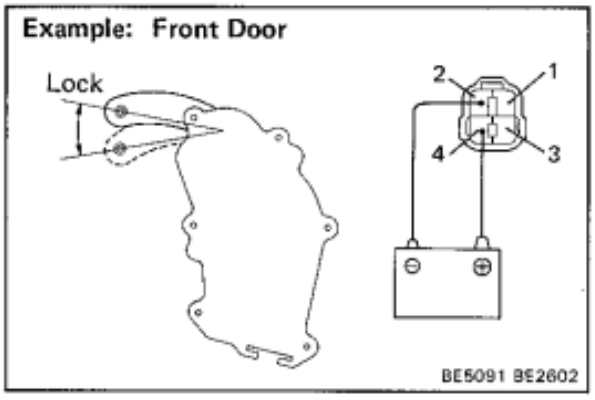

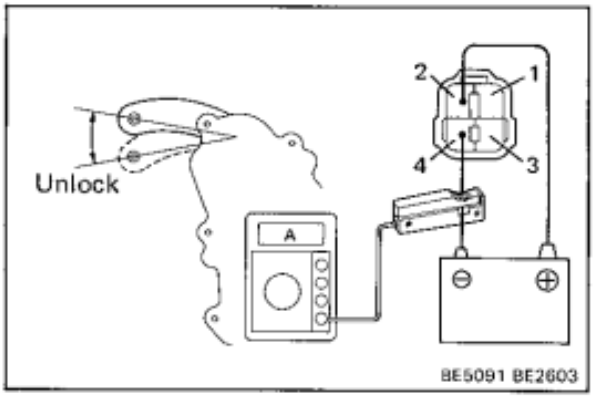

Inspection using an ammeter with a current-measuring probe.

HINT: The number in brackets ( ) applies to 24V vehicles.

(a) Connect the positive (+) lead from the battery to terminal 2 and the negative (−) lead to terminal 4.

(b) Attach a current-measuring probe to either the positive (+) lead or the negative (−) lead, check that the current changes from approx. 3.2 (2) A to less than 0.5 A within 20 to 70 seconds.

(c) Disconnect the leads from terminals.

(d) Approximately 60 seconds later, reverse the polarity, check that the door lock moves to LOCK position.

If operation is not as specified, replace the door lock assembly.

HINT: Perform inspection of PTC thermistor operation of other door lock motors the same way as for the front door.

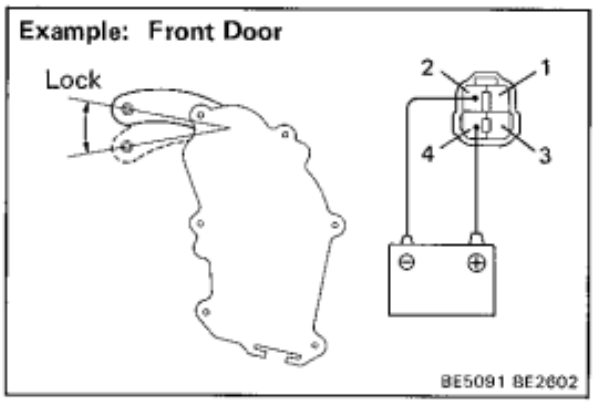

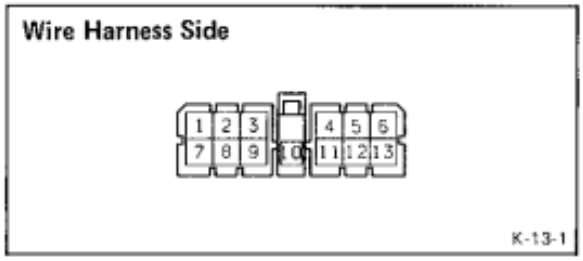

3. INSPECT DOOR LOCK CONTROL RELAY (Relay Circuit)

Disconnect the connector from the relay and inspect the connector on the wire harness side as shown in the chart.

Check for	Tester connection	Condition		Specified value
Continuity	6—Ground	Door key lock and unlock switch position	OFF or Unlock (Door key free or turned to Unlock)	No continuity
			Lock (Door key turned to LOCK)	Continuity
		Door lock manual switch position	OFF or Unlock	No continuity
			Lock	Continuity
	10 — Ground	Constant		Continuity
	13 — Ground	Door key lock and unlock switch position	OFF or Lock (Door key free or turned to Lock)	No continuity
			Unlock (Door key turned to Unlock)	Continuity
		Door lock manual switch position	OFF or Lock	No continuity
			Unlock	Continuity
Voltage	2 — Ground	Constant		Battery voltage

If continuity is as specified, inspect the door lock signal.

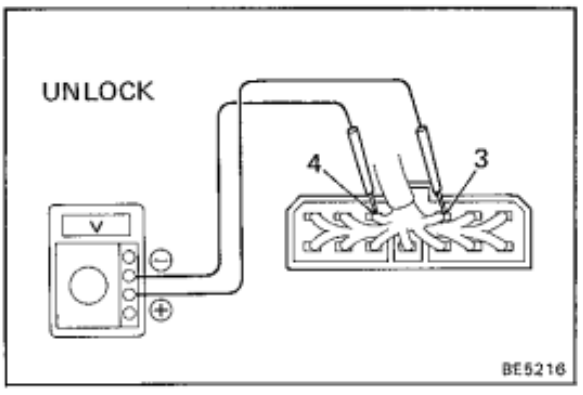

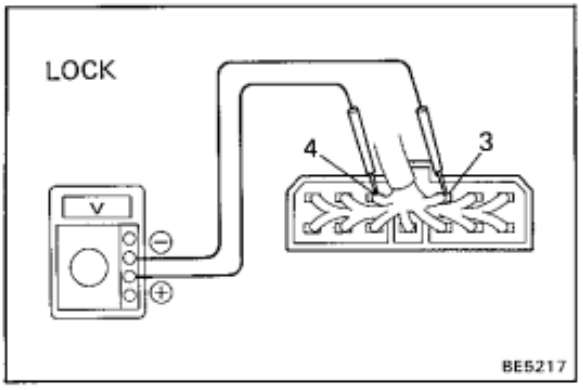

(Door Lock Signal)

HINT: When the relay circuit is as specified, inspect the door lock signal.

(a) Connect the connector to the relay.

(b) Connect the positive (+) lead from the voltmeter to terminal 3 and the negative (—) lead to terminal 4.

(c) Set the door lock control switch to UNLOCK, check that the voltage rises from 0 V to battery voltage for approximately 0.2 seconds.

(d) Reverse the polarity of the voltmeter leads.

(e) Set the door lock control switch to LOCK, check that the voltage rises from 0 V to battery voltage for approximately 0.2 seconds.

If operation is not as specified, replace the relay.

SLIDING ROOF SYSTEM

Parts Location

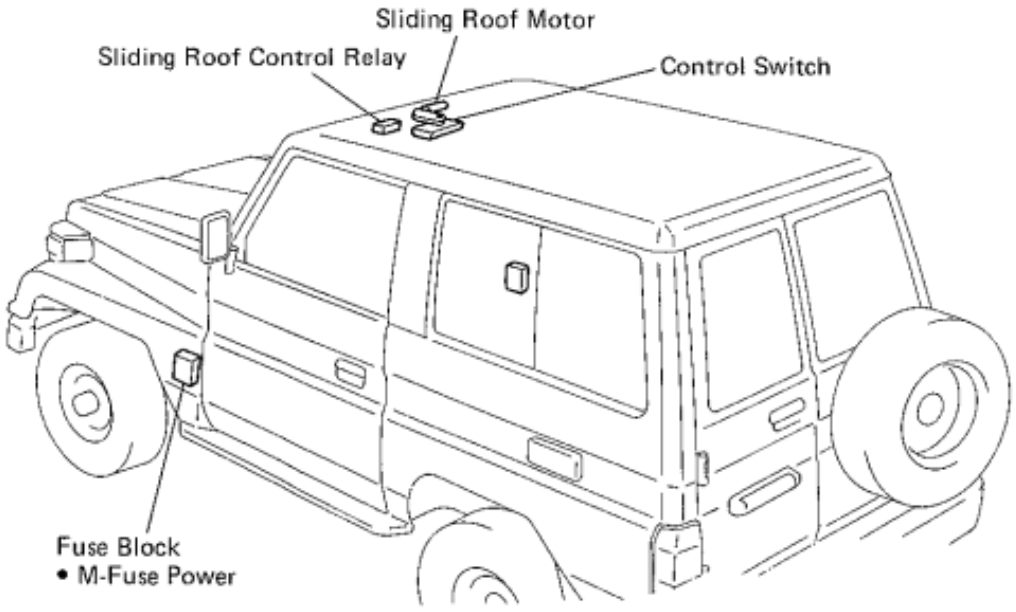

BE5324

Wiring and Connector Diagrams

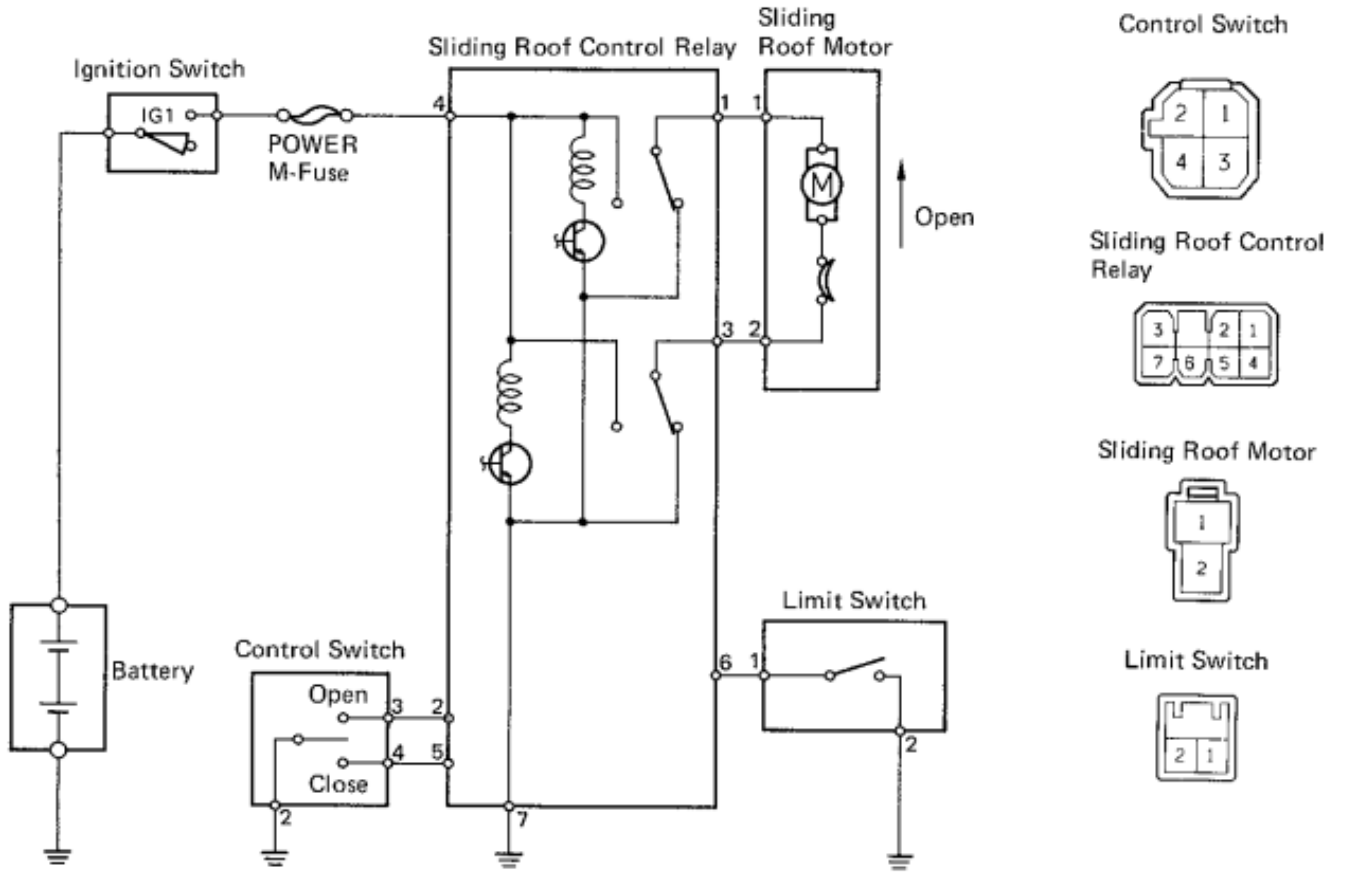

The POWER SOURCE CIRCUIT has been simplified. For full details see pages BE-10, 11, 12.

GA-4-2
G-7-2
H-2-2
BE5212 G-2-2

Troubleshooting

Problem	Possible cause	Remedy	Page
Sliding roof does not operate	Control switch faulty	Check switch	BE-88
	Limit switch faulty	Check switch	BE-88
	Sliding roof motor faulty	Check motor	BE-88
	Sliding roof control relay faulty	Check relay	BE-89
	Wiring faulty	Repair as necessary	

Parts Inspection

1. INSPECT SWITCHES

(Control Switch/Continuity)

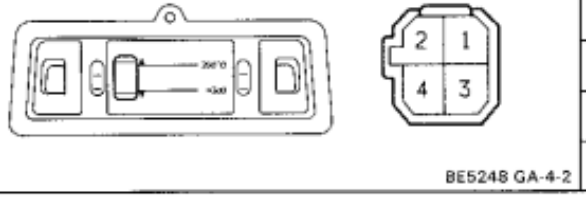

Terminal / Switch position	2	3	4
OPEN	○	○	
OFF			
CLOSE	○		○

If continuity is not as specified, replace the switch.

(Limit Switch/Continuity)

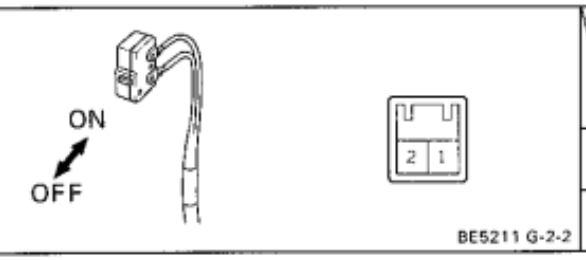

Terminal / Switch position	1	2
OFF (Switch pin released)		
ON (Switch pin pushed in)	○	○

If continuity is not as specified, replace the switch.

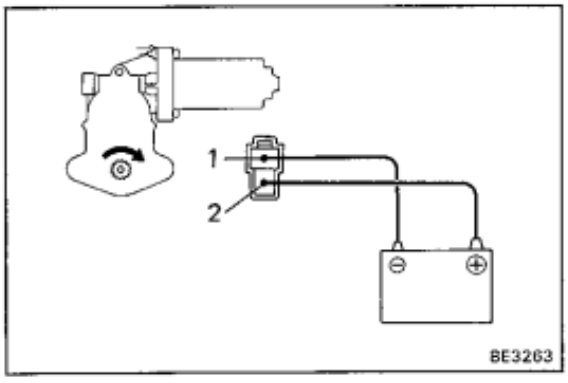

2. INSPECT SLIDING ROOF MOTOR

(Motor Operation)

(a) Connect the positive (+) lead from the battery to terminal 2 and the negative (—) lead to terminal 1, check that the motor turns to counterclockwise (moves to the close side).

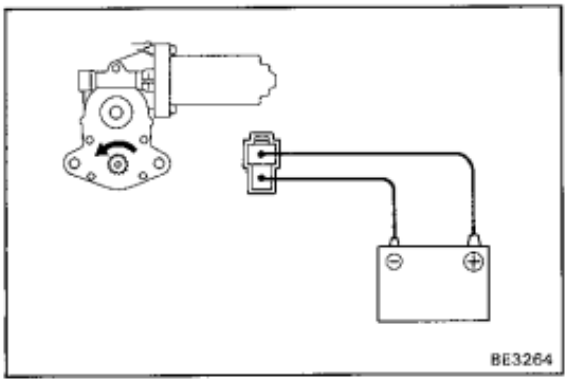

(b) Reverse the polarity, check that the motor turns to clockwise (moves to the open side).

If operation is not as specified, replace the motor.

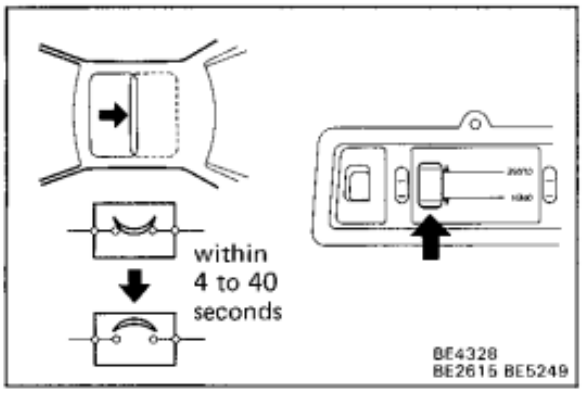

(Circuit Breaker Operation)

(a) With the sliding roof in the fully opened position, hold the sliding roof switch in "OPEN" position and check that there is a circuit breaker operation noise within 4 to 40 seconds.

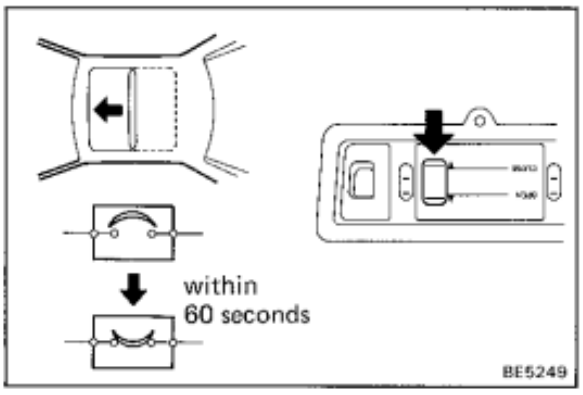

(b) With the sliding roof in fully opened position, hold the sliding roof switch in "CLOSE" position and check that the sliding roof begins to close within 60 seconds.

If operation is not as specified, replace the motor.

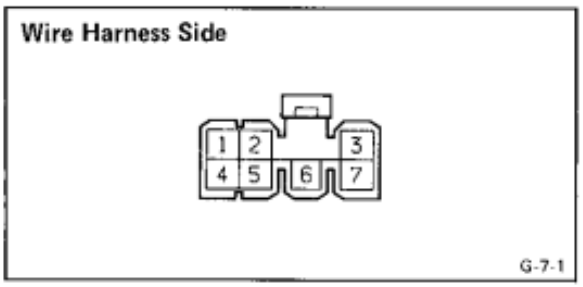

3. INSPECT SLIDING ROOF CONTROL RELAY (Relay Circuit)

Disconnect the connector from the relay and inspect the connector on the wire harness side as shown in the chart.

Check for	Tester connection	Condition		Specified value
Continuity	1 — 3	Constant		Continuity
	2 — Ground	Control switch position	OFF or CLOSE	No continuity
			OPEN	Continuity
	5 — Ground	Control switch position	OFF or OPEN	No continuity
			CLOSE	Continuity
	6 — Ground	Limit switch position	OFF [Sliding roof approx. 100 mm (3.94 in.) opened]	No continuity
			ON [Except for conditions mentioned above]	Continuity
	7 — Ground	Constant		Continuity
Boltage	4 — Ground	Ignition switch position	LOOK or ACC	No voltage
			ON	Battery voltage

If circuit is as specified, replace the relay.

POWER MIRROR CONTROL SYSTEM

Parts Location

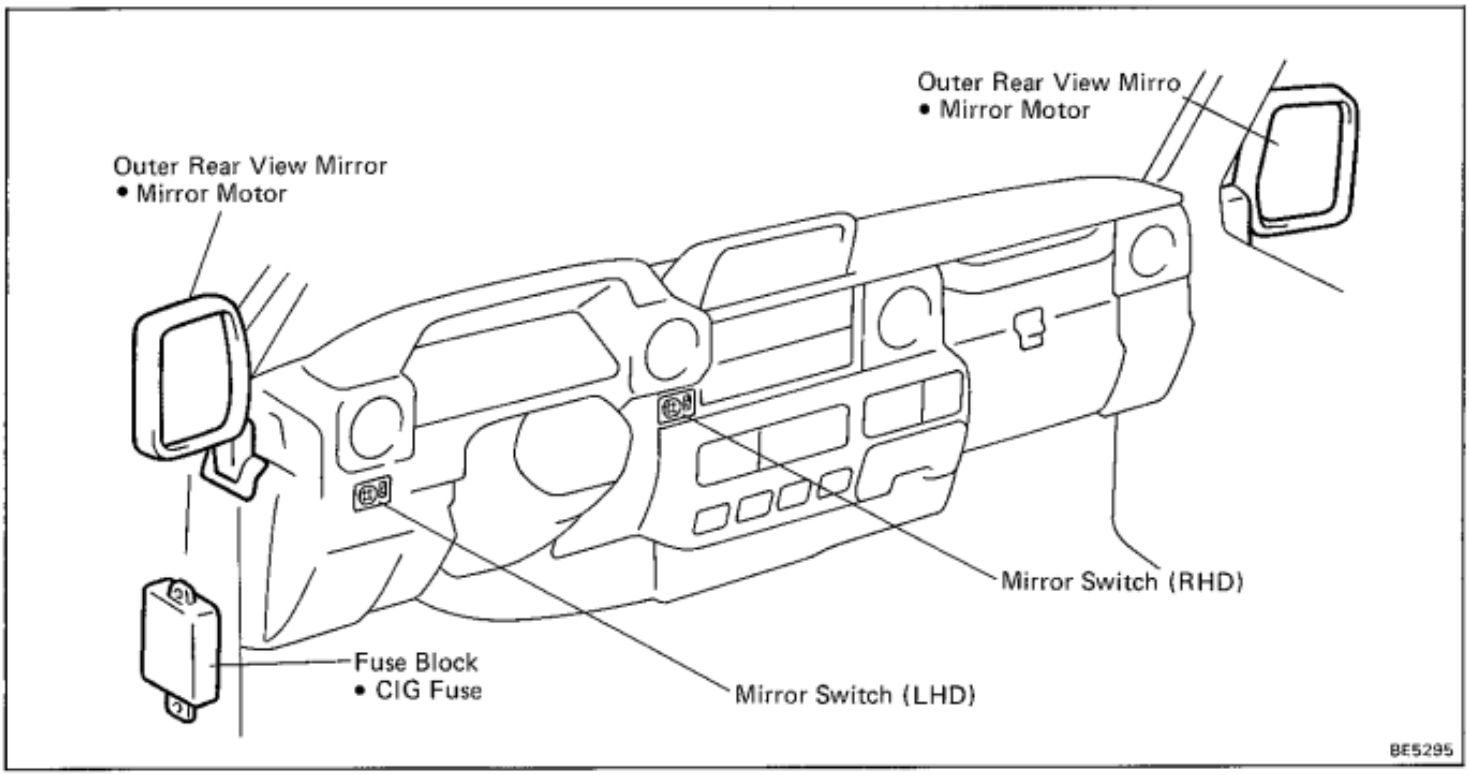

Wiring and Connector Diagrams

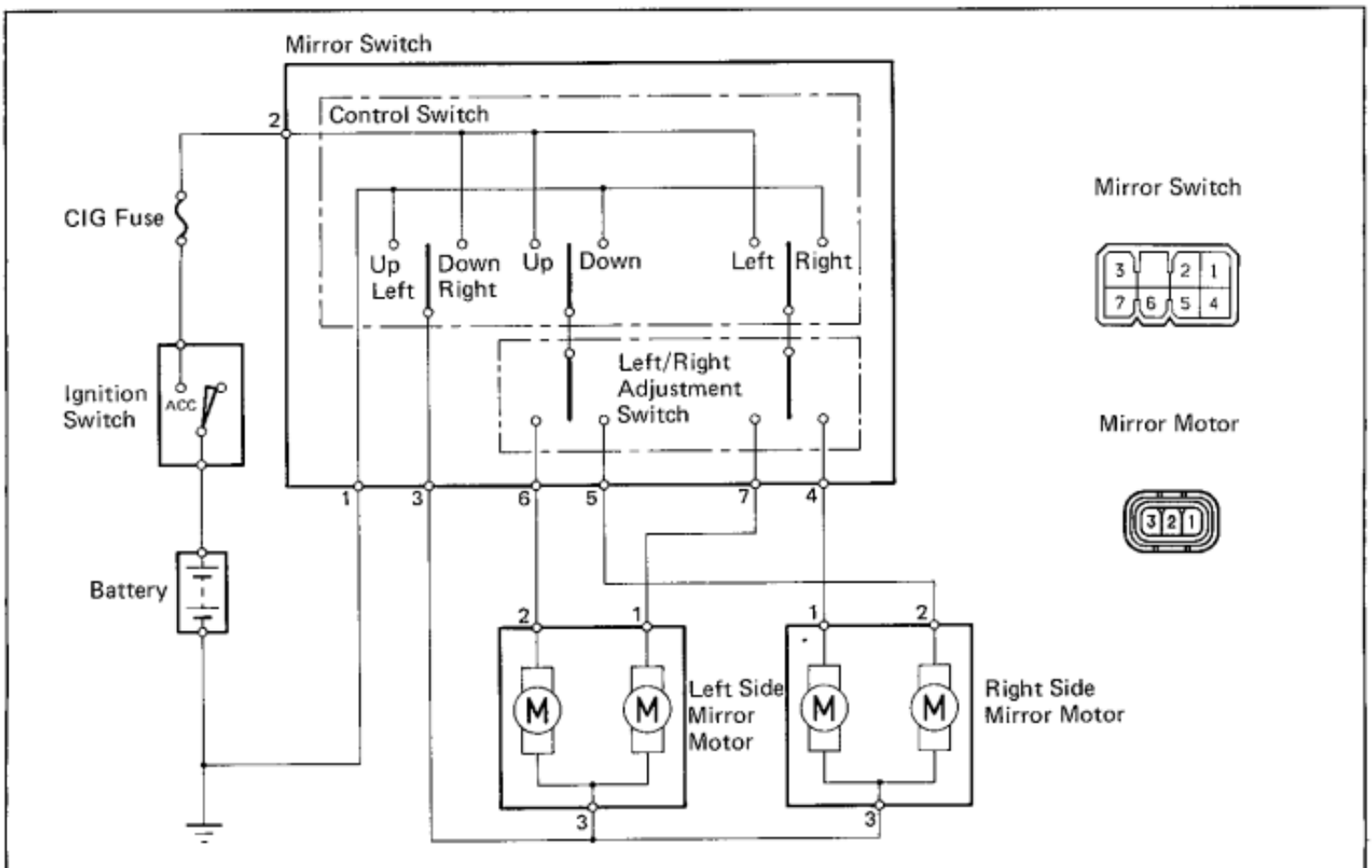

The POWER SOURCE CIRCUIT hsa been simplified. For full details, see pages BE-10 to 12.

G-7-2
BE4046 U-3-2

Troubleshooting

Problem	Possible cause	Remedy	Page
Remote control mirror system does not operate	CIG fuse faulty	Replace fuse and check for short	BE-4
	Mirror switch faulty	Check switch	BE-91
	Mirror motor faulty	Check motor	BE-91
	Wiring or ground faulty	Repair as necessary	

Parts Inspection

1. INSPECT MIRROR SWITCH (Continuity)

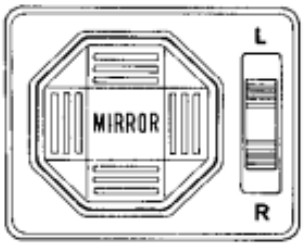

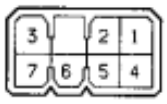

BE5290 G-7-2

Left/Right adjustment switch position	LEFT SIDE					OFF			RIGHT SIDE				
Terminal / Control switch position	2	3	1	6	7	2	3	1	2	3	1	5	4
OFF													
UP	○	○	○	○			○	○	○	○	○	○	
DOWN	○	○	○	○		○	○		○	○	○	○	
LEFT	○	○	○		○		○	○	○	○	○		○
RIGHT	○	○	○		○	○	○		○	○	○		○

If continuity is not as specified, replace the switch.

2. INSPECT MIRROR MOTOR

Connect the positive (+) lead from the battery to terminal in column "A" and the negative (—) lead to terminal in column "B", check that the mirror operates in column "C".

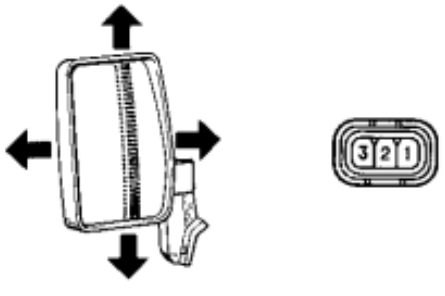

BE5291 U-3-2

A (+)	B (—)	C (Operation)
2	3	Mirror turns upward
3	2	Mirror turns downward
1	3	Mirror turns to left side
3	1	Mirror turns to right side

If operation is not as specified, replace the mirror assembly.

FUEL TRANSFER SYSTEM

Parts Location

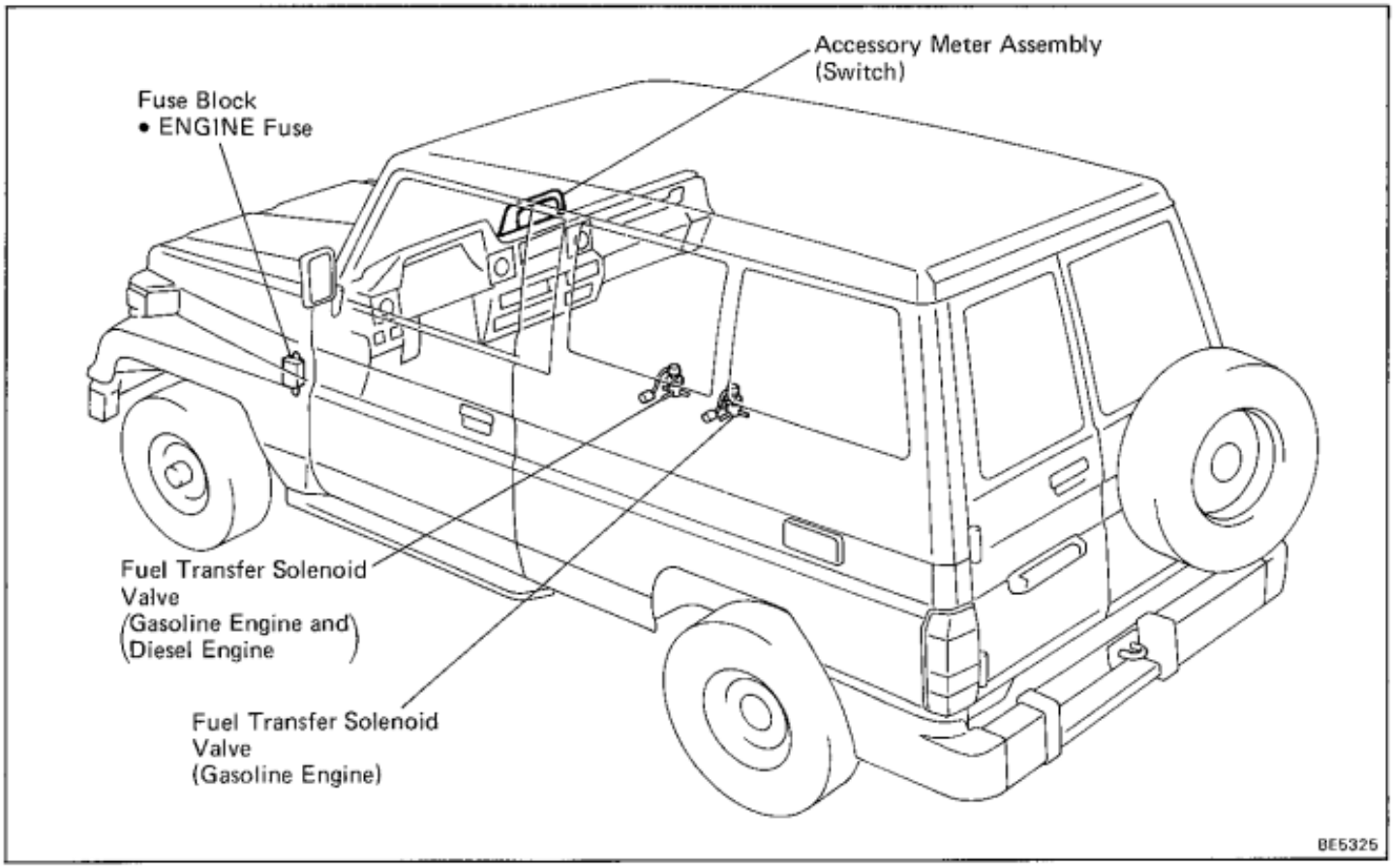

Wiring and Connector Diagrams

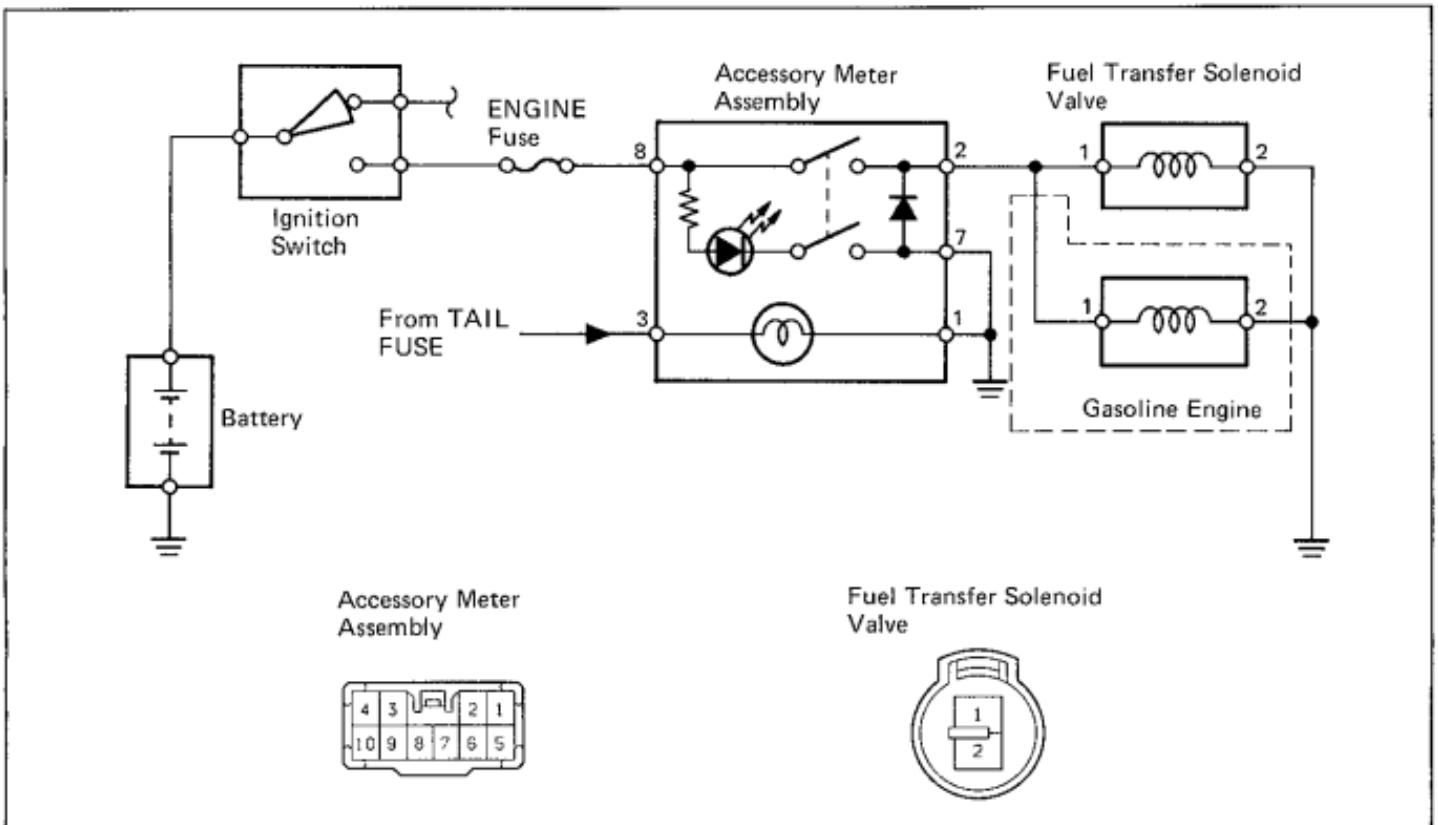

The POWER SOURCE CIRCUIT has been simplified. For full details, see pages BE-10 to 12.

BE5285
S-10-2 IC-2-2

Troubleshooting

Problem	Possible cause	Remedy	Page
Fuel Transfer System do not operate	GAUGE fuse blown	Replace fuse and check for short	BE-4
	Accessory Meter faulty	Check meter	BE-93
	Fuel transfer solenoid valve (Main and return) faulty	Check solenoid valve	BE-93
	Wiring or ground faulty	Repair as necessary	

Parts Inspection

1. **INSPECT ACCESSORY METER (Continuity)**

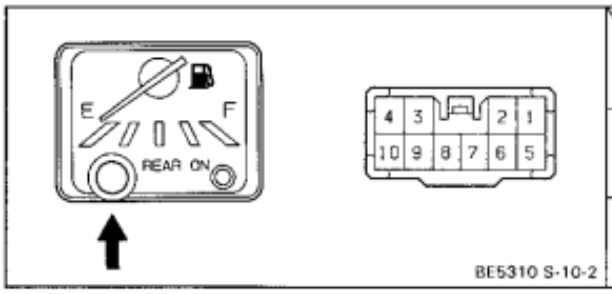

Terminal / Switch position	8	2	Illumination 1	Illumination 3
OFF				
ON	○——	——○		

If continuity is not as specified, check the bulb or replace the switch.

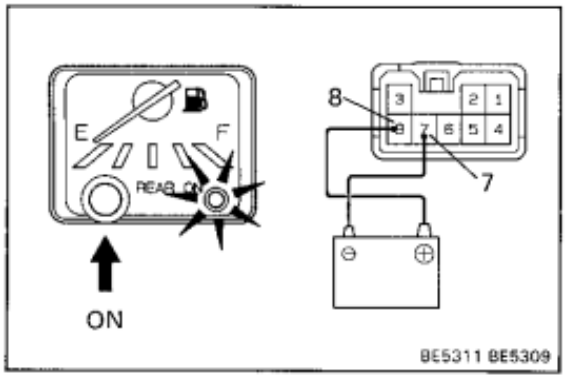

(Indicator Light)

(a) Connect the positive (+) lead from the battery to terminal 8 and the negative (—) lead to terminal 7.

(b) Set the switch ON, check that the indicator light lights up.

If the indicator light does not light up, replace the accessory meter.

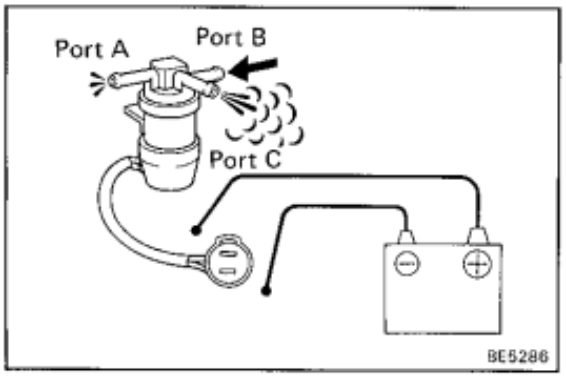

2. **INSPECT FUEL TRANSFER SOLENOID VALVE**

(a) Check that the air flows between ports B and C. Check that the air does not flow between ports A and B.

Port / Condition	A	B	C
No voltage		○——	——○

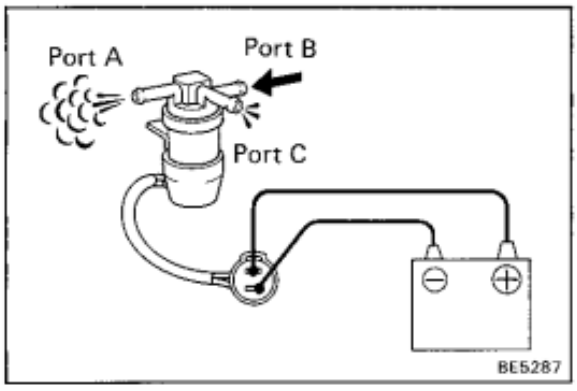

(b) Apply the battery voltage across the terminals. Check that the air flows between ports A and B. Check that the air does not flow between ports B and C.

Port / Condition	A	B	C
Apply the battery voltage	○	○	

If operation is not as specified, replace the solenoid.

AUDIO SYSTEM

Parts Location

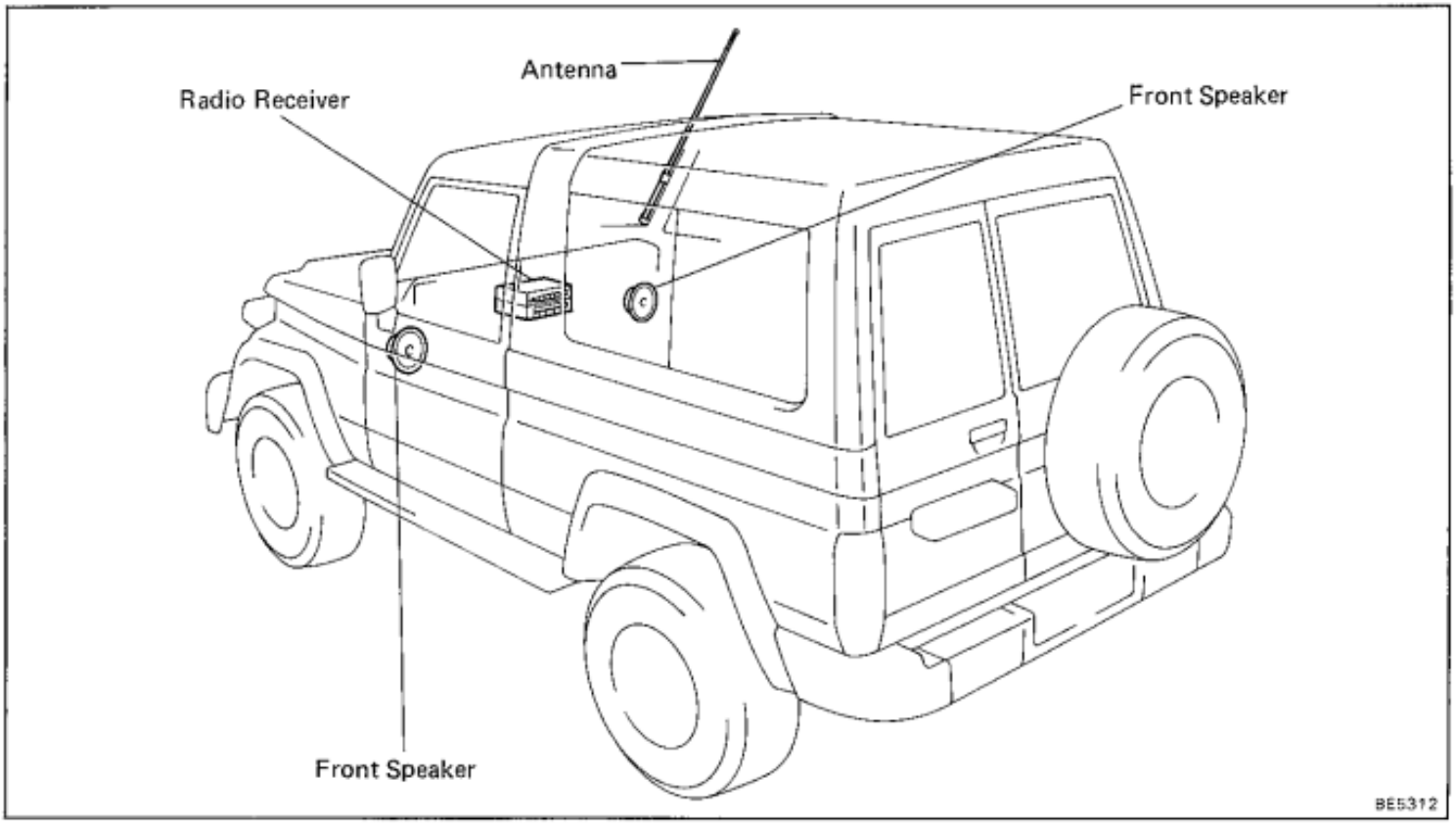

Wiring and Connector Diagrams

• **Radio, 1 Speaker: Symbol [R]**

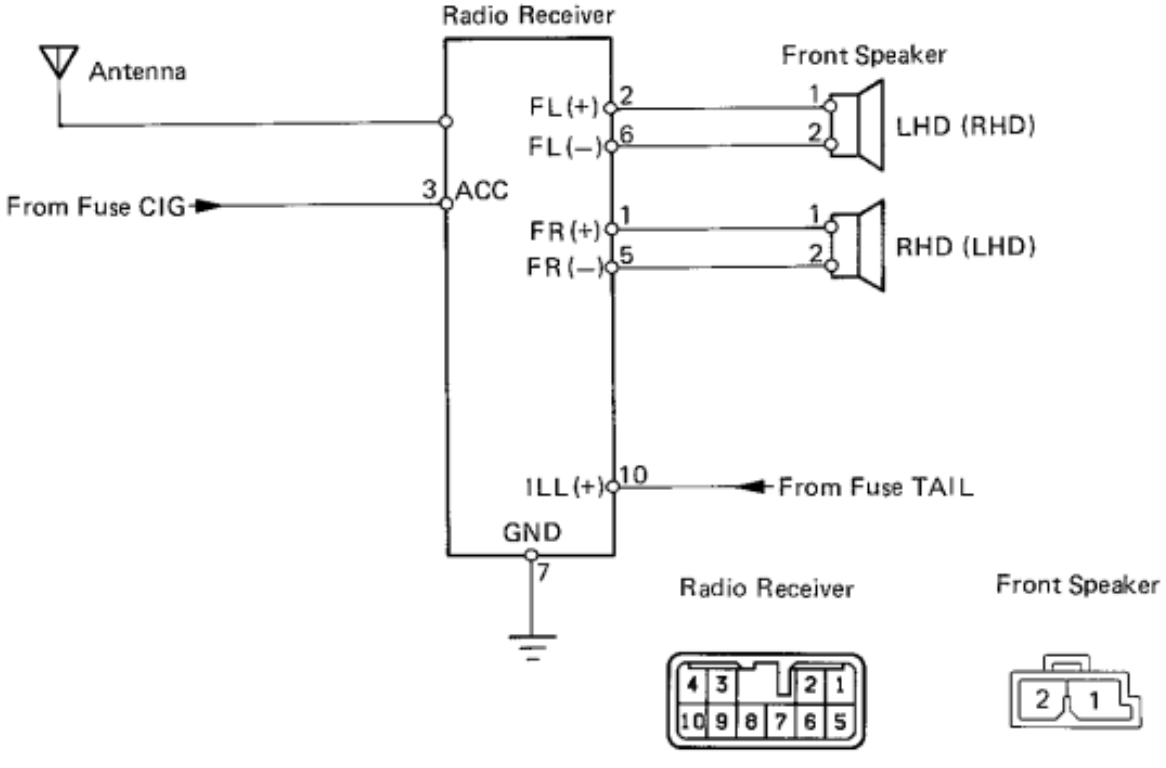

The POWER SOURCE CIRCUIT has been simplified. For full details, see pages BE-10, 11, 12.

BE5367 S-10-2-A GA-2-2-A

Wiring and Connector Diagrams

• **Radio, 2 Speaker: Symbol R**

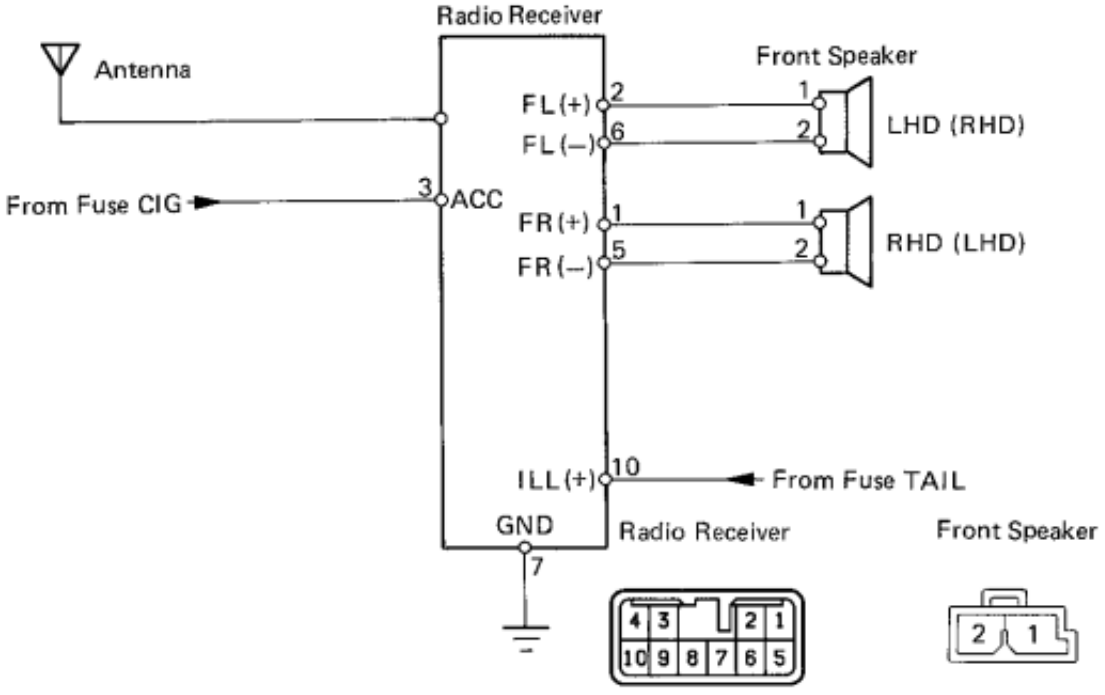

• **Radio, ETR, 2 Speaker: Symbol R**

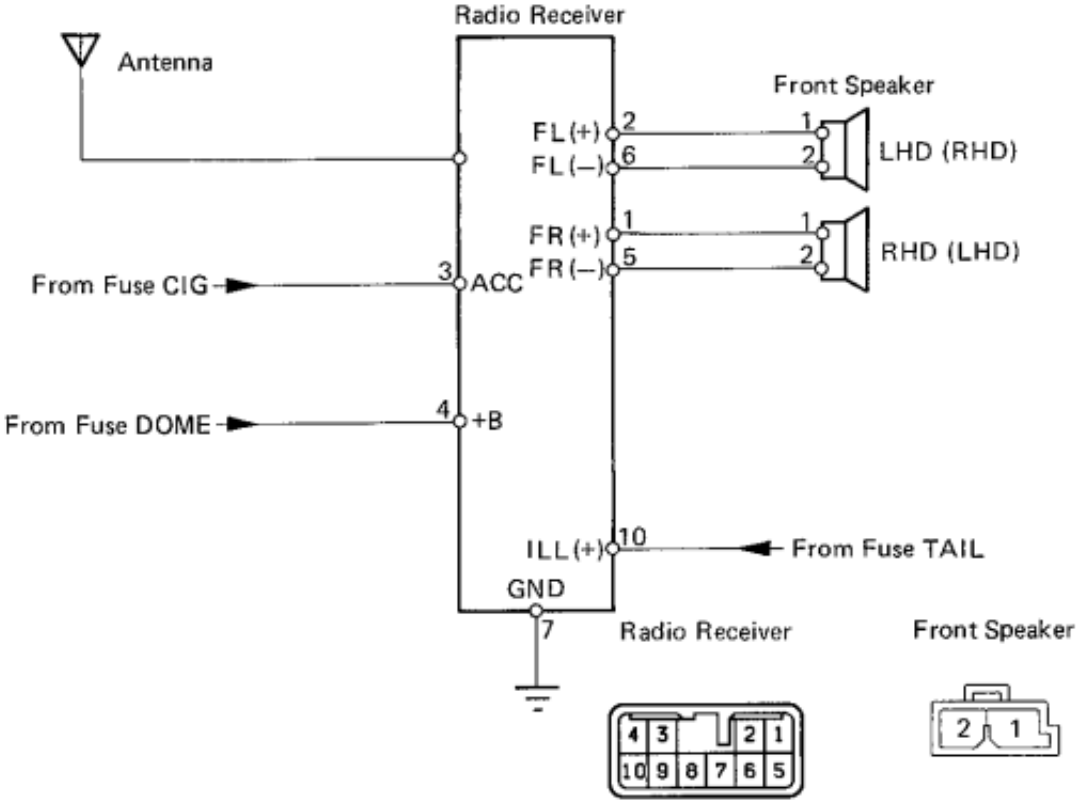

The POWER SOURCE CIRCUIT has been simplified. For full details, see pages BE-10, 11, 12.

BE5367 S-10-2-A GA-2-2-A
BE5368 S-10-2-A GA-2-2-A

Wiring and Connector Diagrams (Cont'd)

• **Radio — Tape Player, 2 Speaker: Symbol U**

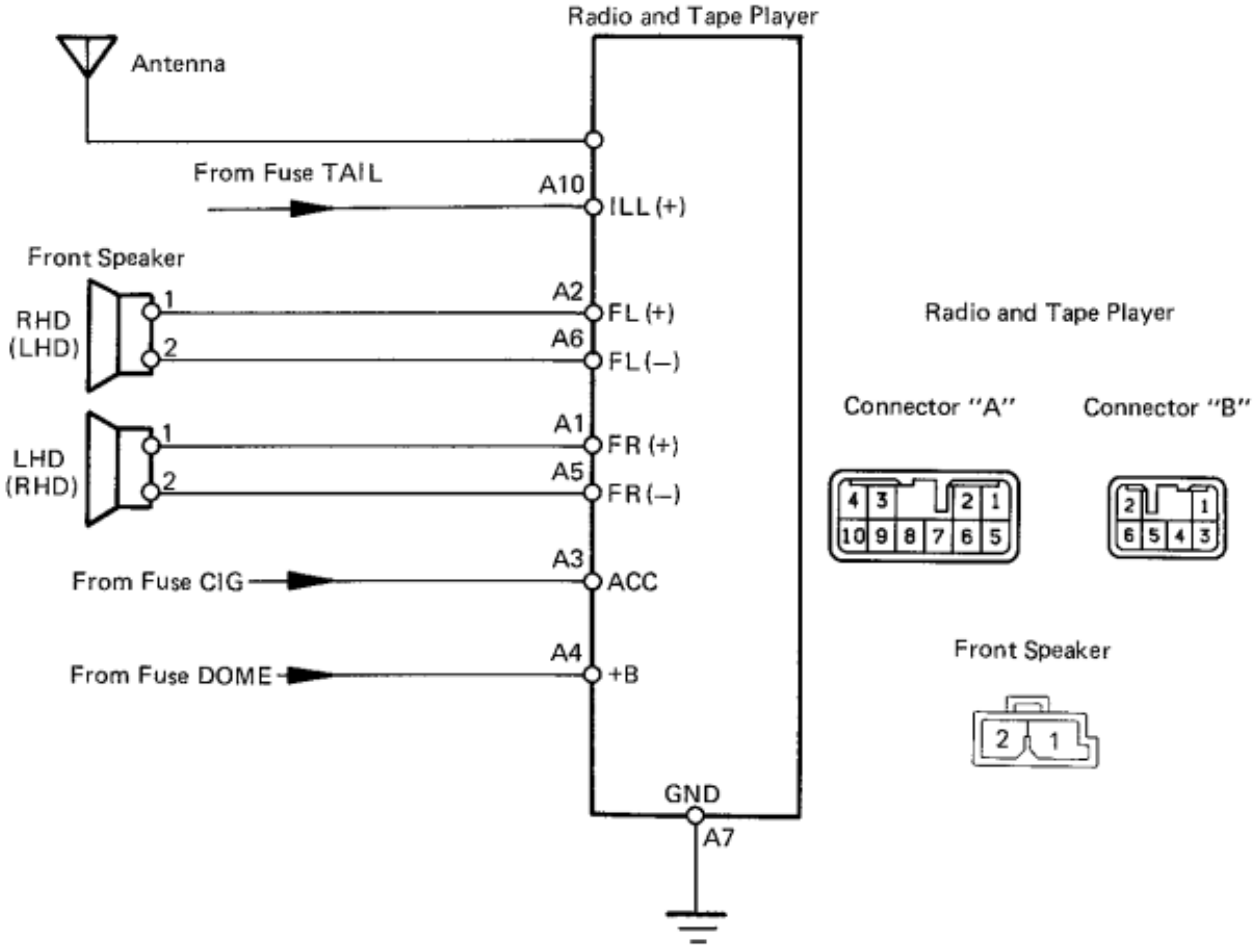

• **Radio, ETR, 2 Speaker + Tape Player: Symbol S**

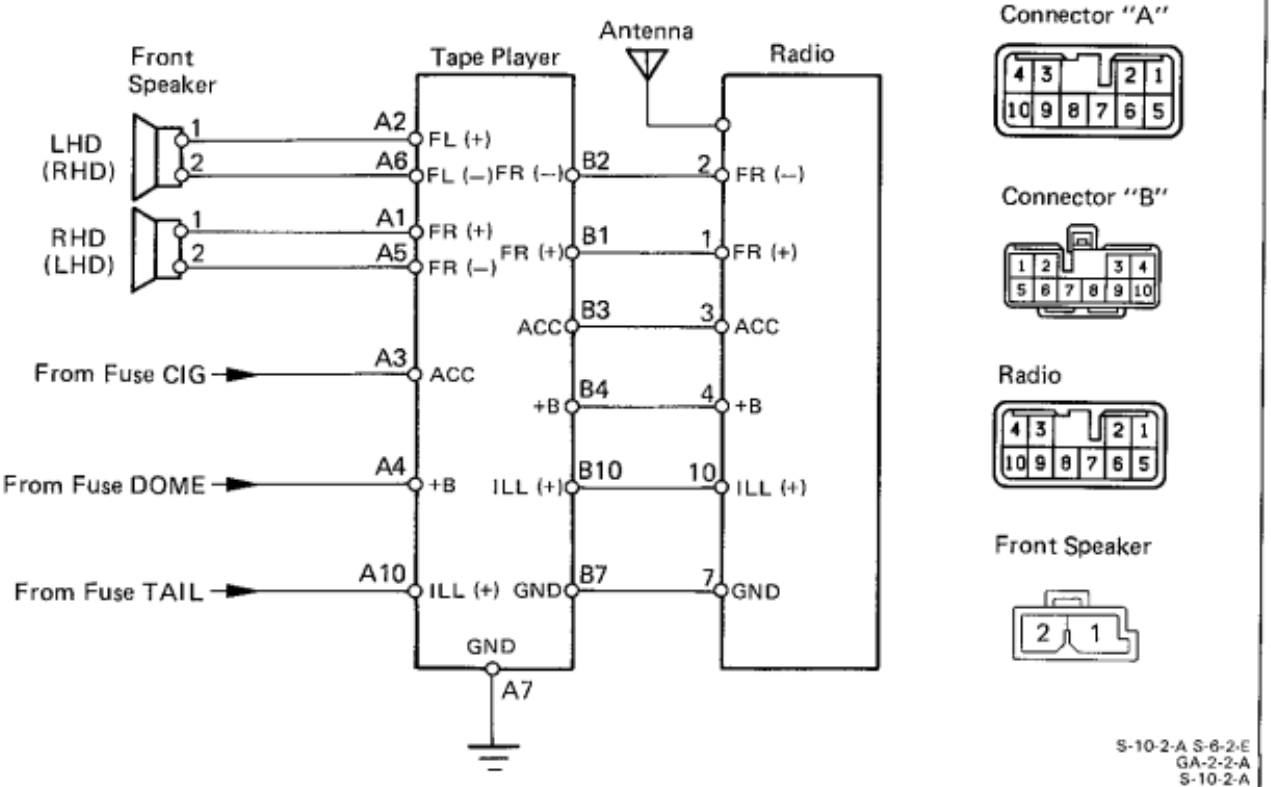

The POWER SOURCE CIRCUIT has been simplified. For full details, see pages BE-10, 11, 12.

S-10-2-A S-6-2-E
GA-2-2-A
S-10-2-A
S-10-1-A
8E5369 S-10-2-A
8E5370 GA-2-2-A

Troubleshooting

NOTICE: When replacing the internal mechanism (computer part) of the audio system, be careful that no part of your body or clothing comes in contact with the terminals of the leads from the IC, etc. of the replacement part (spare part).

HINTS: This inspection procedure is a simple troubleshooting which should be carried out on the vehicle during system operation and was prepared on the assumption of system component troubles (except for the wires and connectors, etc.).

Always inspect the trouble taking the following items into consideration.

- Open or short circuit of the wire harness
- Connector or terminal connection fault

Problem		No.
Radio	No power coming in.	1
	Power coming in, but radio not operating.	2
	Noise present, but AM-FM not operating.	3
	Either speaker does not work.	4
	Either AM or FM does not work.	5
	Reception poor (Volume faint).	5
	Few preset tuning bands.	5
	Sound quality poor.	6
	Auto-Radio Information (ARI) not received.	7
	Cannot set station select button.	8
	Preset memory disappears.	8
Tape Player	Cassette tape cannot be inserted.	9
	Cassette tape inserts, but no power.	10
	Power coming in, but tape player not operating.	11
	Either speaker does not work.	12
	Sound quality poor (Volume faint).	13
	Tape jammed, malfunction with tape speed or auto-reverse.	14
	APS, SKIP, RPT buttons not operating.	15
	Cassette tape will not eject.	16
Noise	Noise produced by vibration or shock while driving.	17
	Noise produced when engine starts.	18
Antenna	Antenna-related.	19

HOW TO USE DIAGNOSTIC CHART

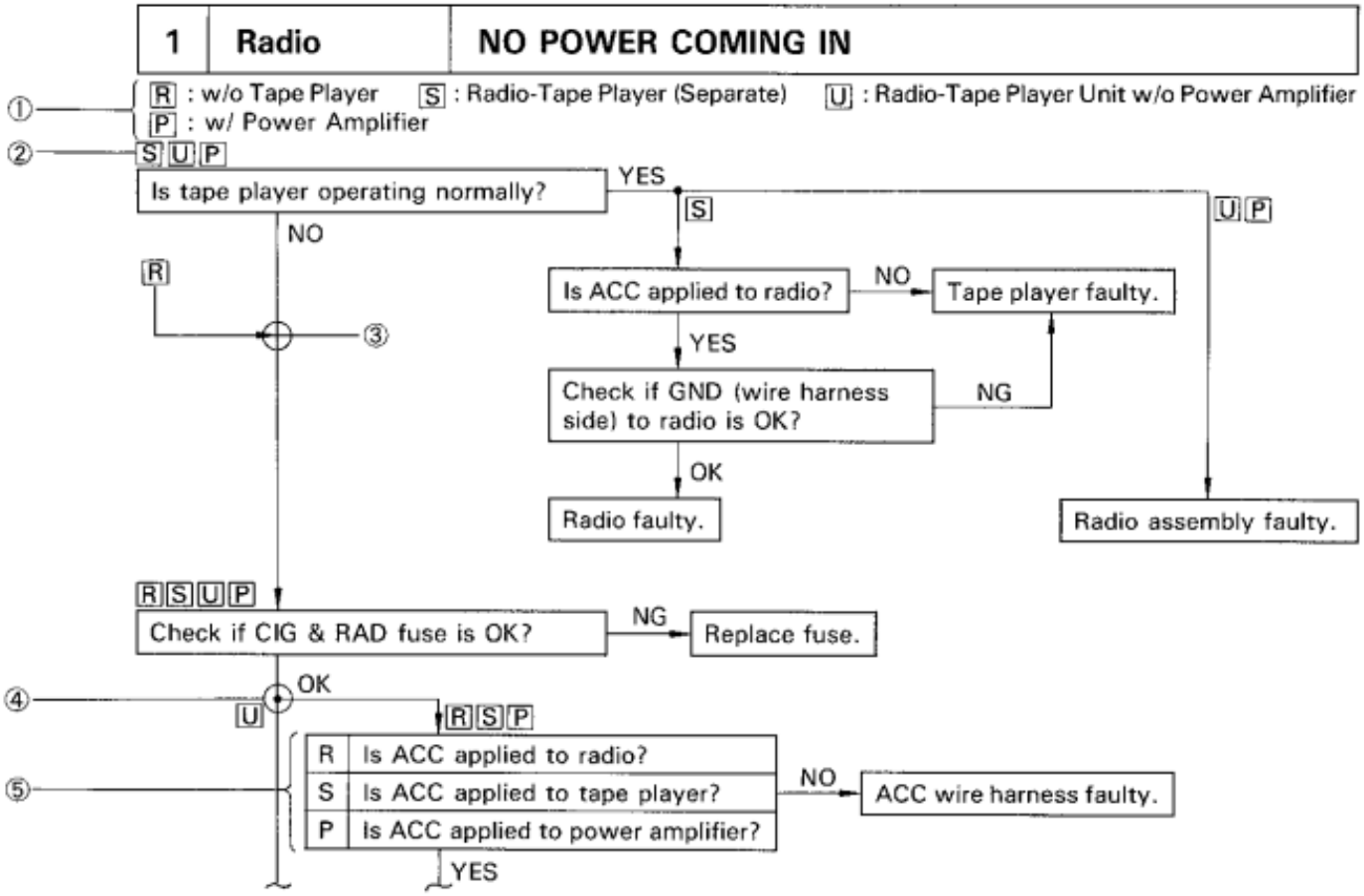

① Audio system type and symbol used.

HINT: Confirm the applicable type of audio system.

② Symbol for type of audio system the question applies to.

HINT: If the audio system type is not applicable, proceed to next question below.

③ Junction without black circle.

HINT: Proceed to next question below.

④ Junction with black circle.

HINT: Proceed to question for applicable audio system type.

⑤ HINT: Select question for applicable audio system type.

1 RADIO — NO POWER COMING IN

[R] : Radio [S] : Radio + Tape Player [U] : Radio — Tape Player

[S] [U]

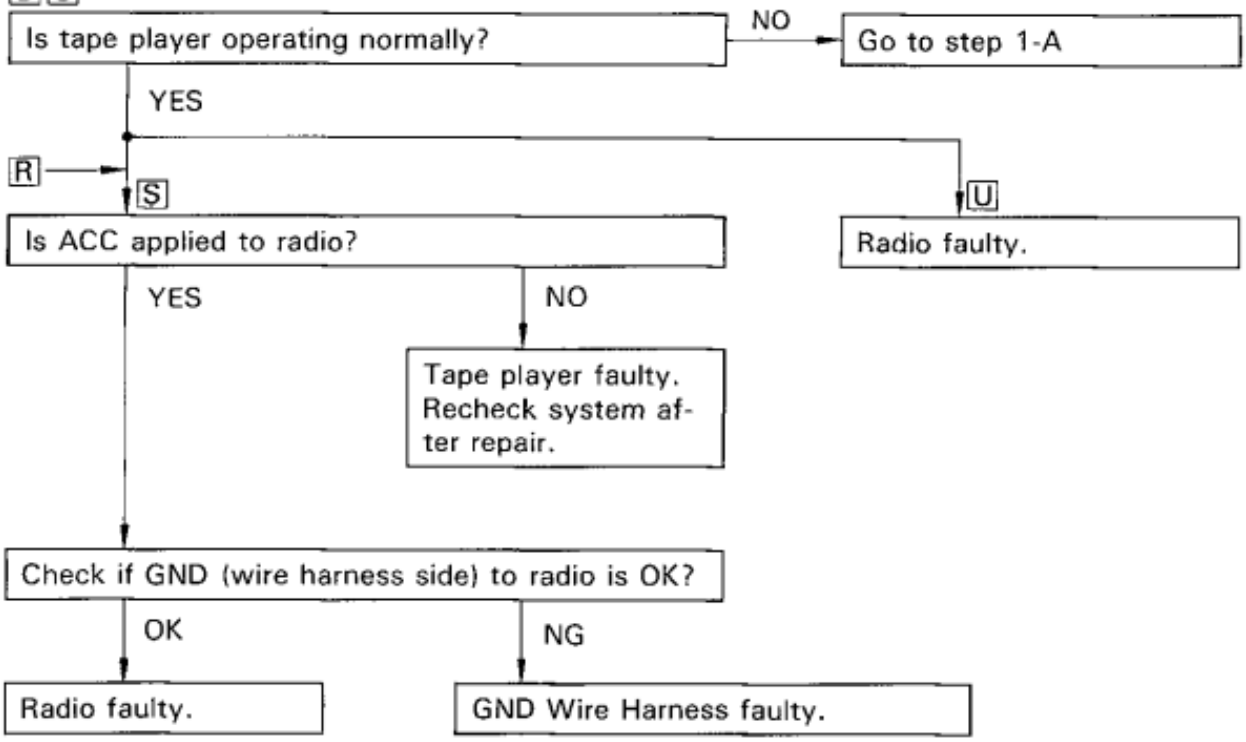

1—A.

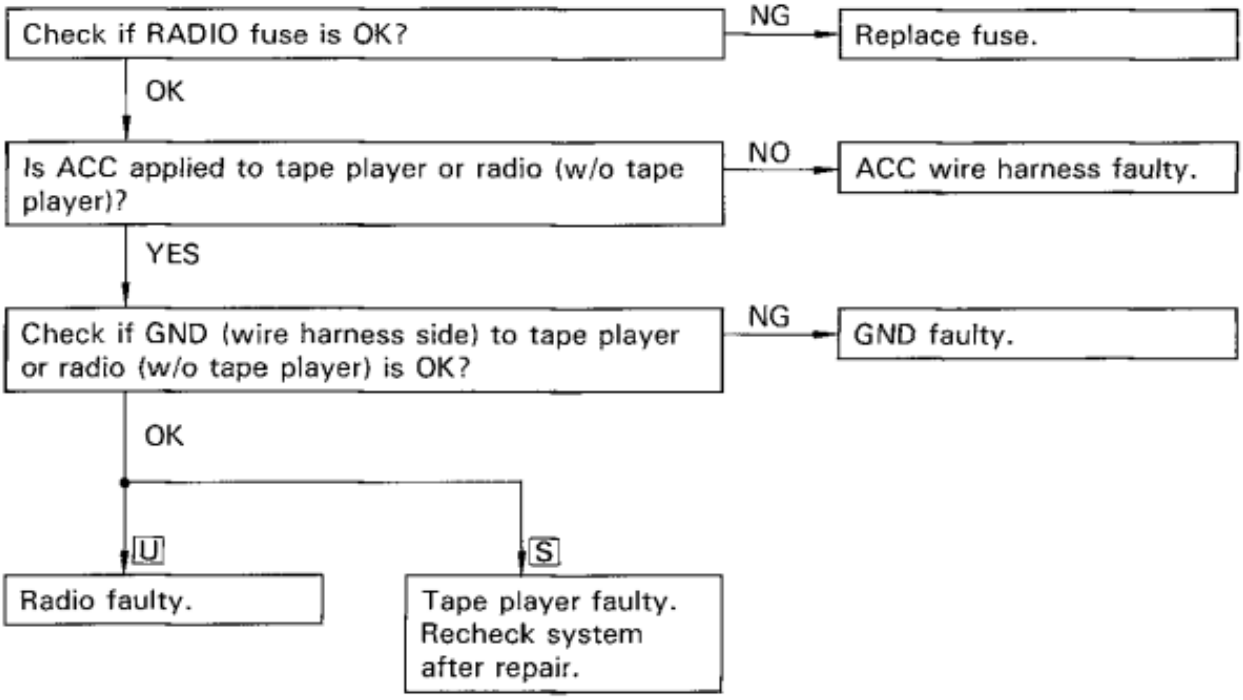

2	RADIO	POWER COMING IN, BUT RADIO NOT OPERATING

[R] : Radio [S] : Radio + Tape Player [U] : Radio + Tape Player

[R]

Do speakers pop when the volume switch is turned to maximum and then the power is switched ON?

YES → Go to No. 19. → Radio faulty. (IF RADIO SIDE FAULTY)

NO → Go to step 2—C.

[S][U]

Is tape player operating normally?

YES → Go to No. 19. → Radio faulty. (IF RADIO SIDE FAULTY)

NO → Go to step 2—A.

2—A.

Is there continuity in speaker wire harness?

NO → Speaker wire harness faulty.

YES

Temporarily install another speaker. Functions OK?

YES → Speaker faulty.

NO

[R] → Go to No. 19. → IF RADIO SIDE FAULTY → Radio faulty.

[S] → Tape player faulty. Recheck system after repair.

[U] → Radio faulty. Recheck system after repair.

3 RADIO NOISE PRESENT, BUT AM-FM NOT OPERATING

[R] : Radio [S] : Radio + Tape Player [U] : Radio — Tape Player

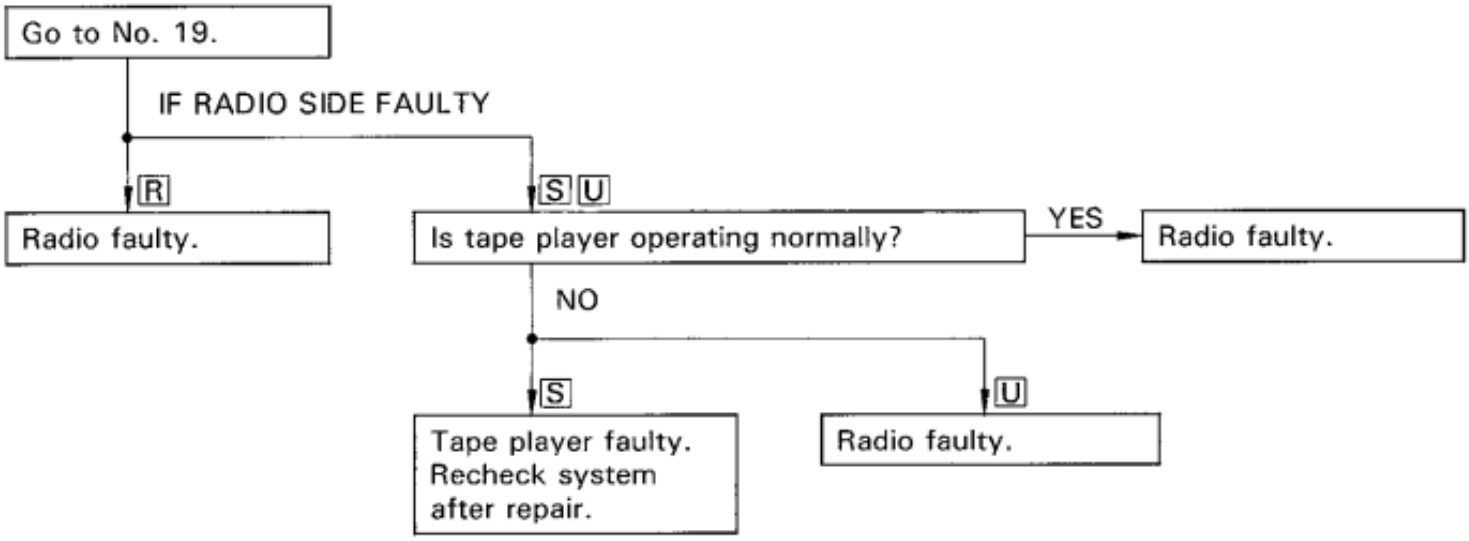

4 RADIO EITHER SPEAKER DOES NOT WORK

[R] : Radio [S] : Radio + Tape Player [U] : Radio — Tape Player

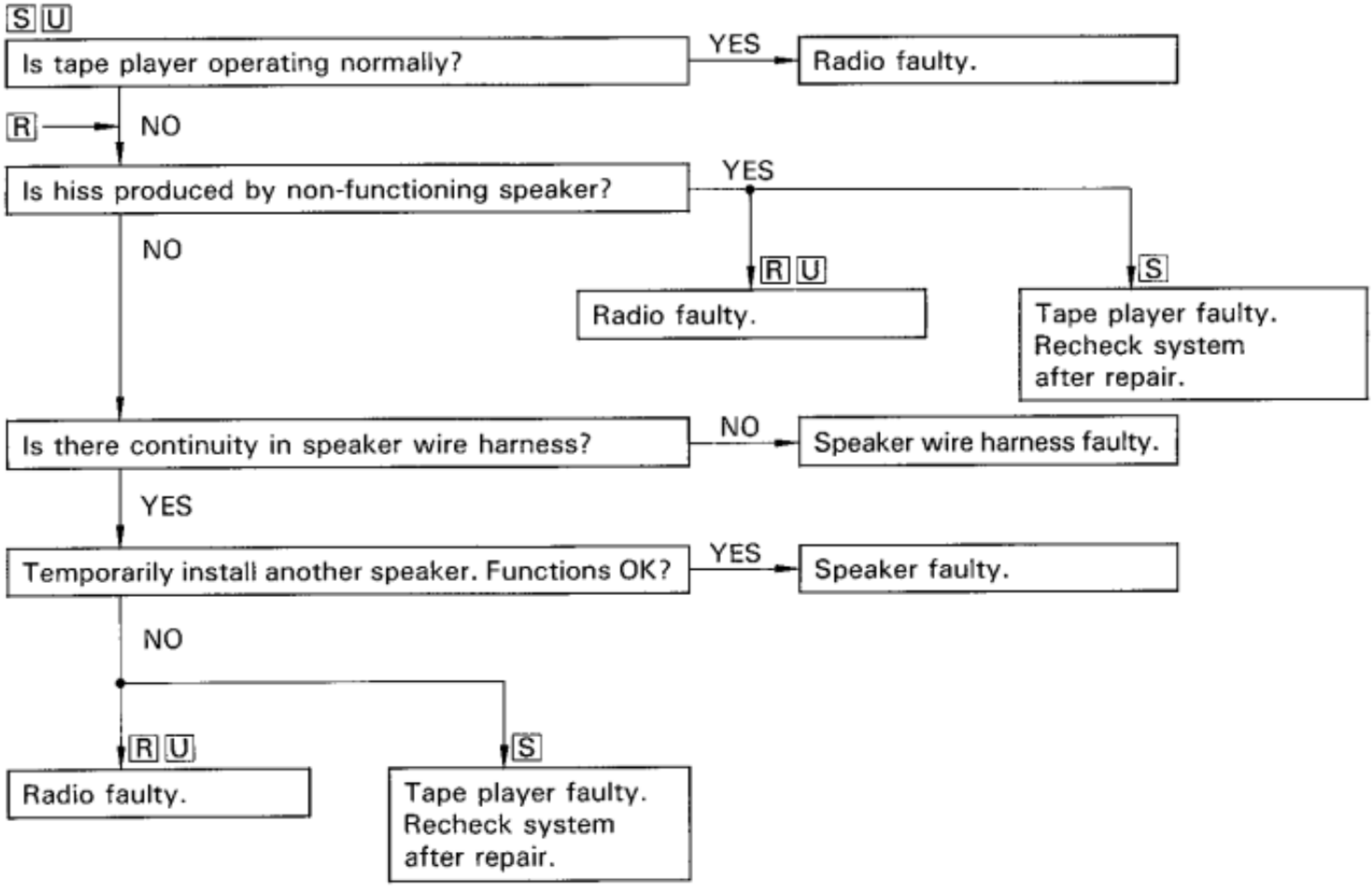

5 RADIO — EITHER AM OR FM DOES NOT WORK, RECEPTION POOR (VOLUME FAINT), FEW PRESET TUNING BAND

[R] : Radio [S] : Radio + Tape Player [U] : Radio — Tape Player

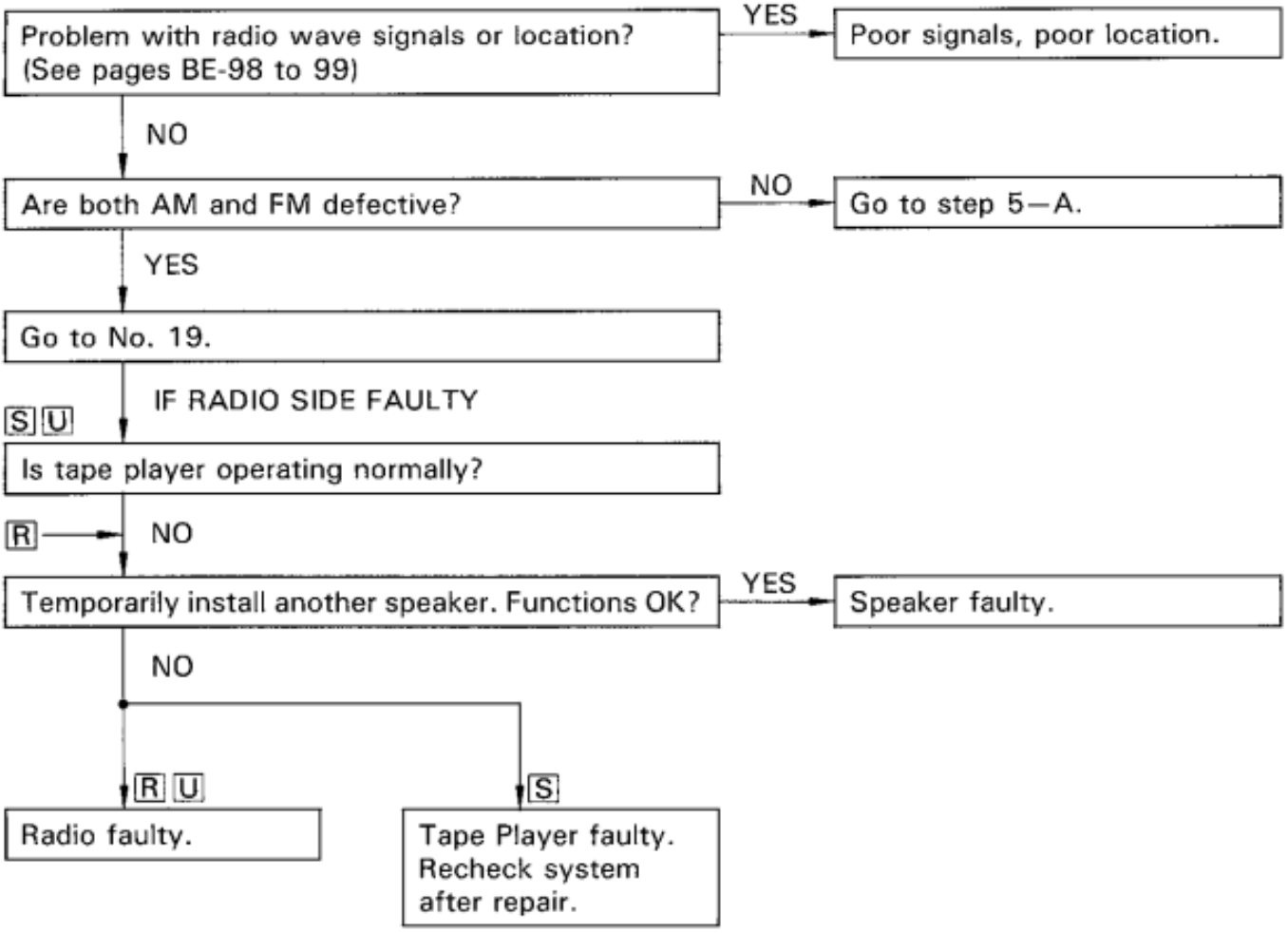

5—A.

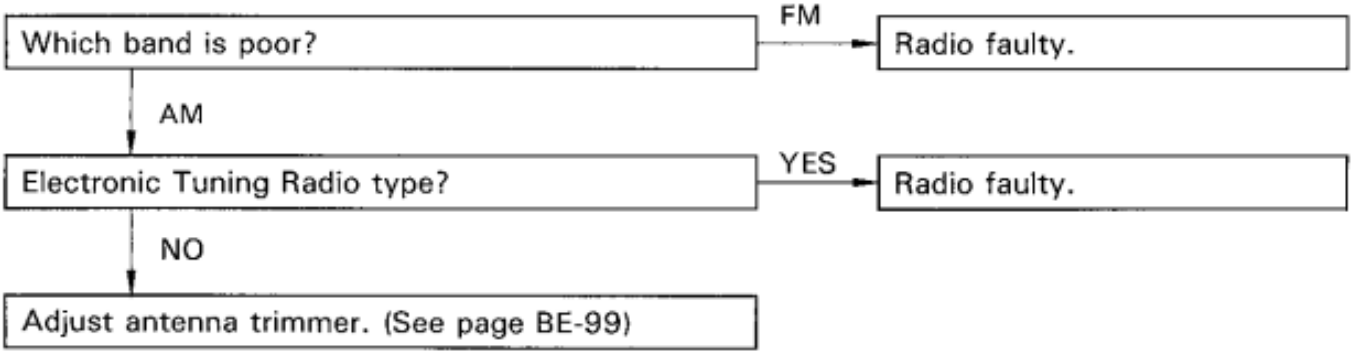

6 RADIO — SOUND QUALITY POOR

[R] : Radio [S] : Radio + Tape Player [U] : Radio — Tape Player

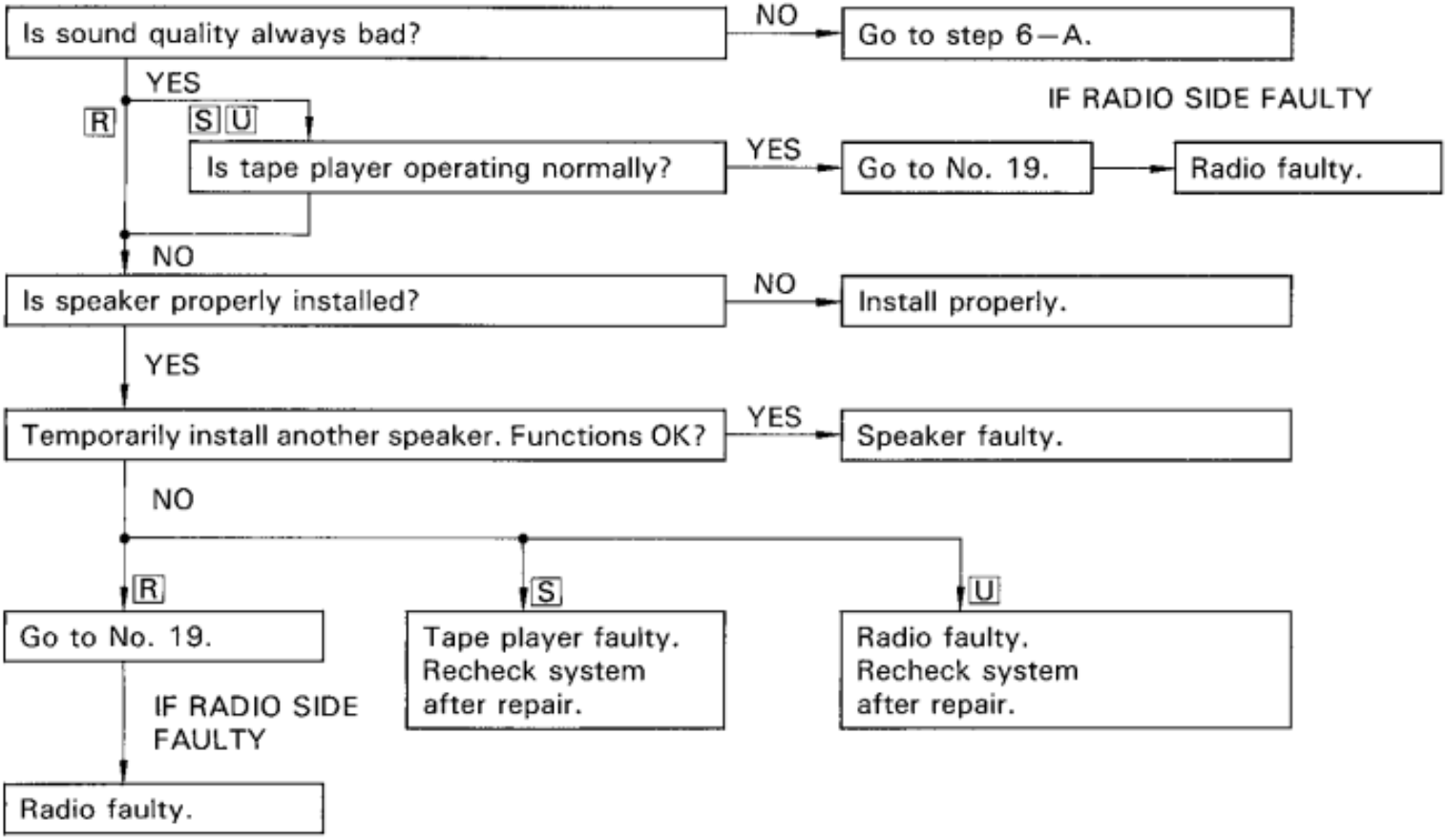

6—A.

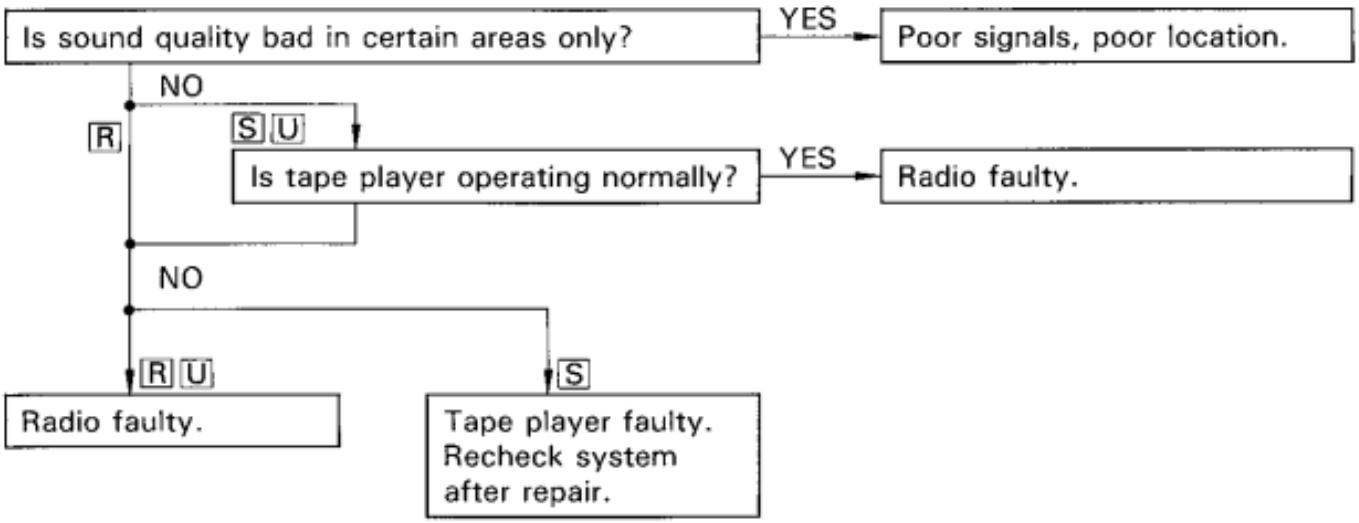

7 RADIO — AUTO-RADIO INFORMATION (ARI) NOT RECEIVED

Is ARI being broadcast?
- NO → Non-broadcast region.
- YES ↓

Is radio operating normally?
- NO → Refer to appropriate troubleshooting chart depending on symptoms.
- YES ↓

Radio faulty.

8 RADIO — CANNOT SET STATION SELECT BUTTON, PRESET MEMORY DISAPPEARS

[R] : Radio [S] : Radio + Tape Player [U] : Radio — Tape Player

Electronic Tuning Radio type?
- NO → Radio faulty.
- YES ↓

[S] [U]
Can cassette tape be inserted in tape player?

[R] → NO

Check if DOME fuse is OK?
- NG → Replace fuse.
- OK ↓

Is +B applied to tape player or radio
- NO → +B wire harness faulty.
- YES ↓

Check if GND (wire harness side) to tape player or radio is OK?
- NG → GND faulty.
- OK ↓

[R] [S]
Is +B applied to radio?
- NO → Tape player faulty. Recheck system after repair.
- YES ↓

[U]
Radio faulty.

Check if GND (wire harness side) to radio from Tape Player is OK?
- NG → GND wire harness between Tape Player and radio
- OK ↓

Radio faulty.

9 TAPE PLAYER CASSETTE TAPE CANNOT BE INSERTED

[S] : Radio + Tape Player [U] : Radio — Tape Player

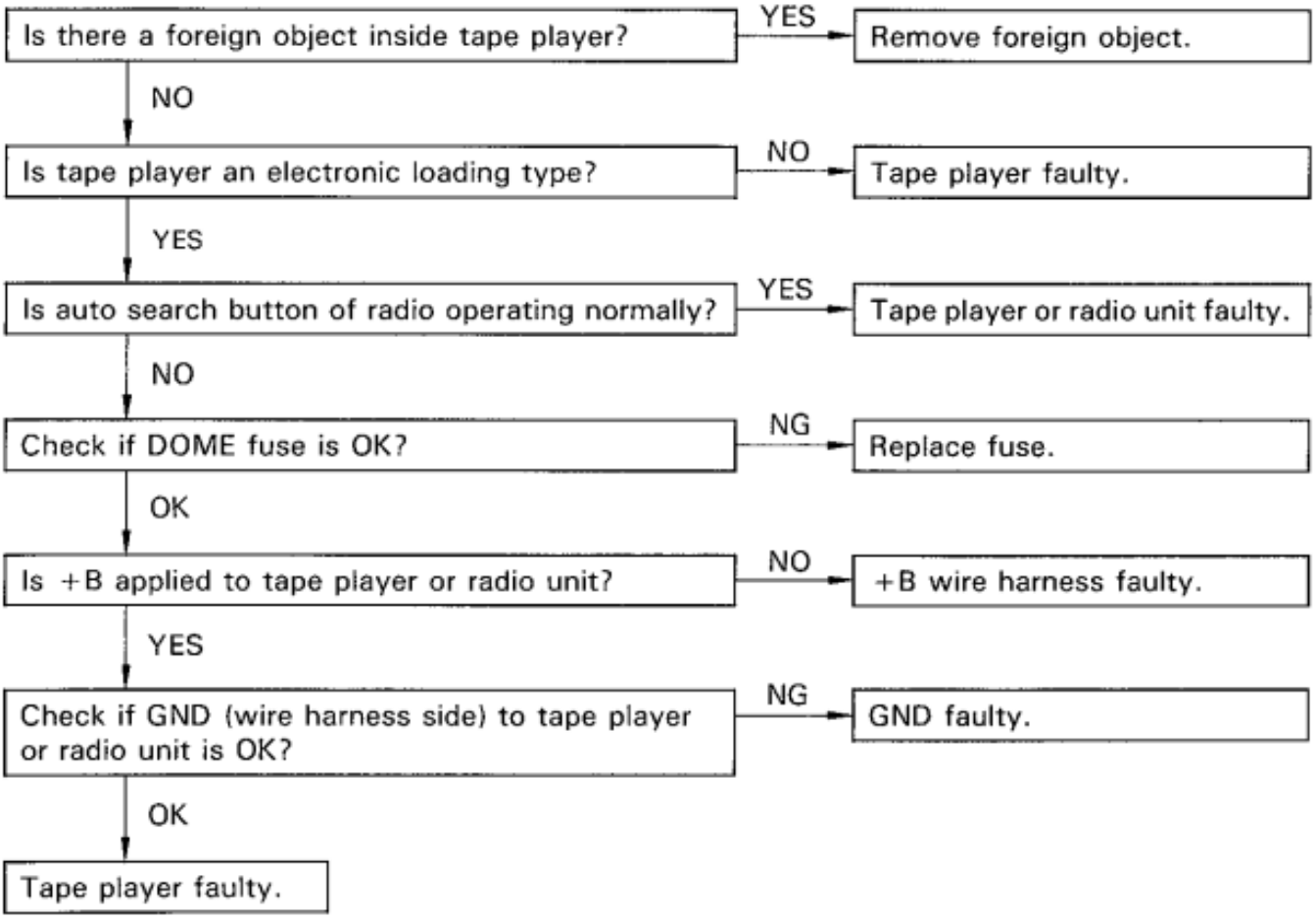

10 TAPE PLAYER CASSETTE TAPE INSERTS, BUT NO POWER

[S] : Radio + Tape Player [U] : Radio — Tape Player

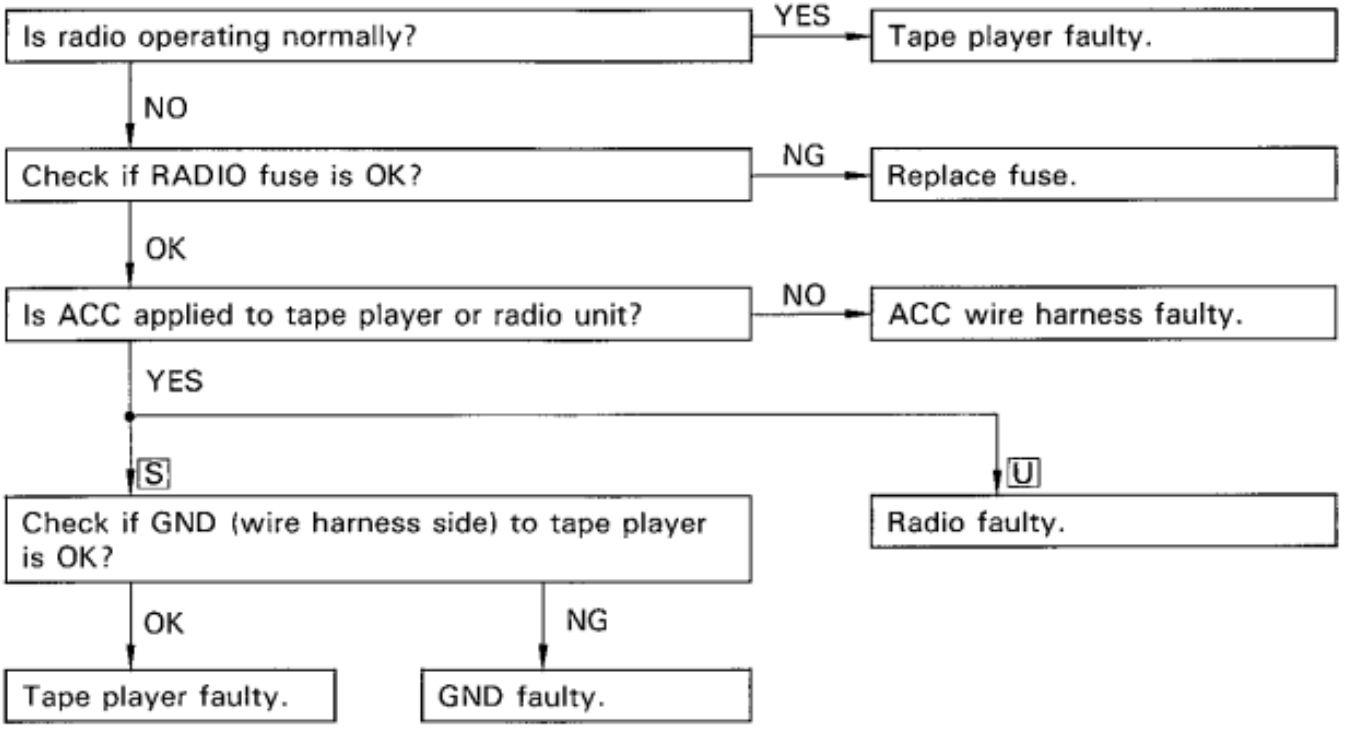

11 TAPE PLAYER POWER COMING IN, BUT TAPE PLAYER NOT OPERATING

[S] : Radio + Tape Player [U] : Radio — Tape Player

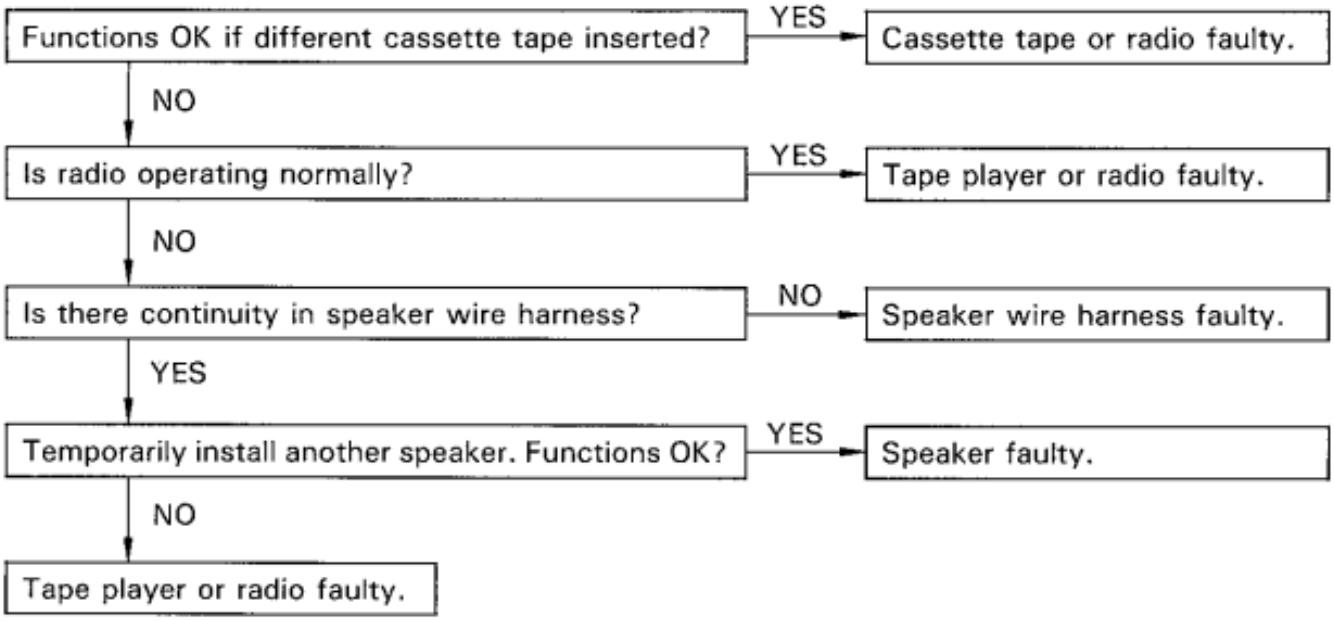

12 TAPE PLAYER EITHER SPEAKER DOES NOT WORK

[S] : Radio + Tape Player [U] : Radio — Tape Player

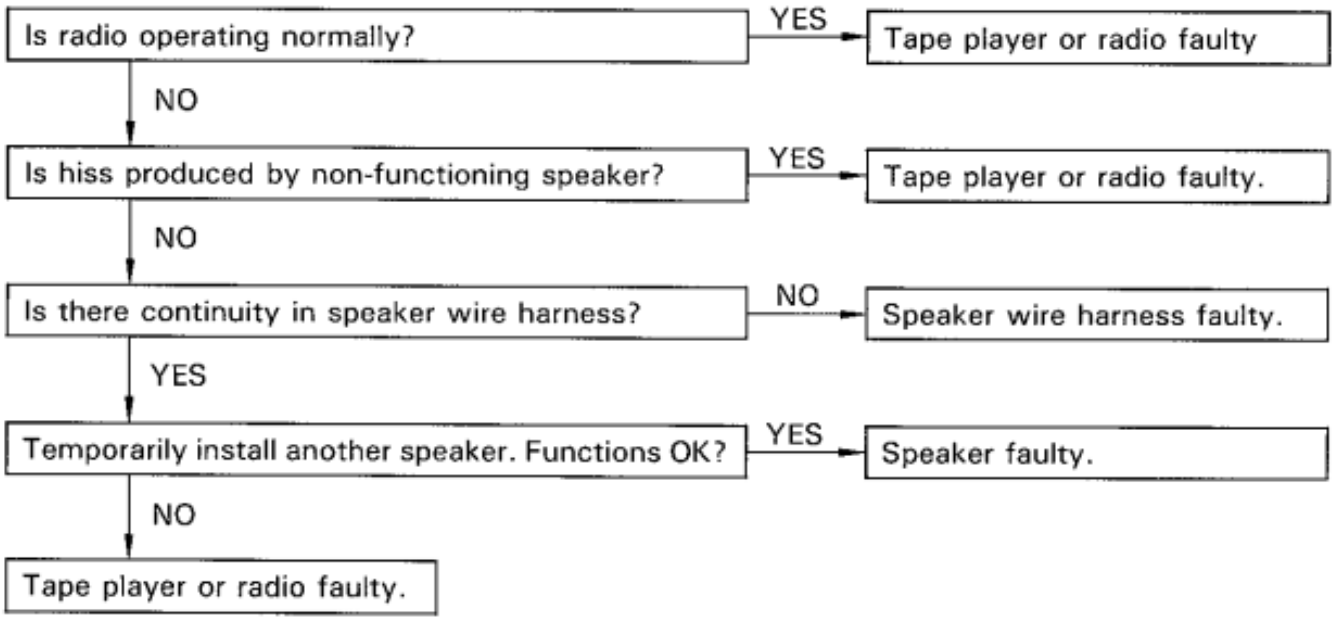

13 TAPE PLAYER SOUND QUALITY POOR (VOLUME FAINT)

[S] : Radio + Tape Player [U] : Radio — Tape Player

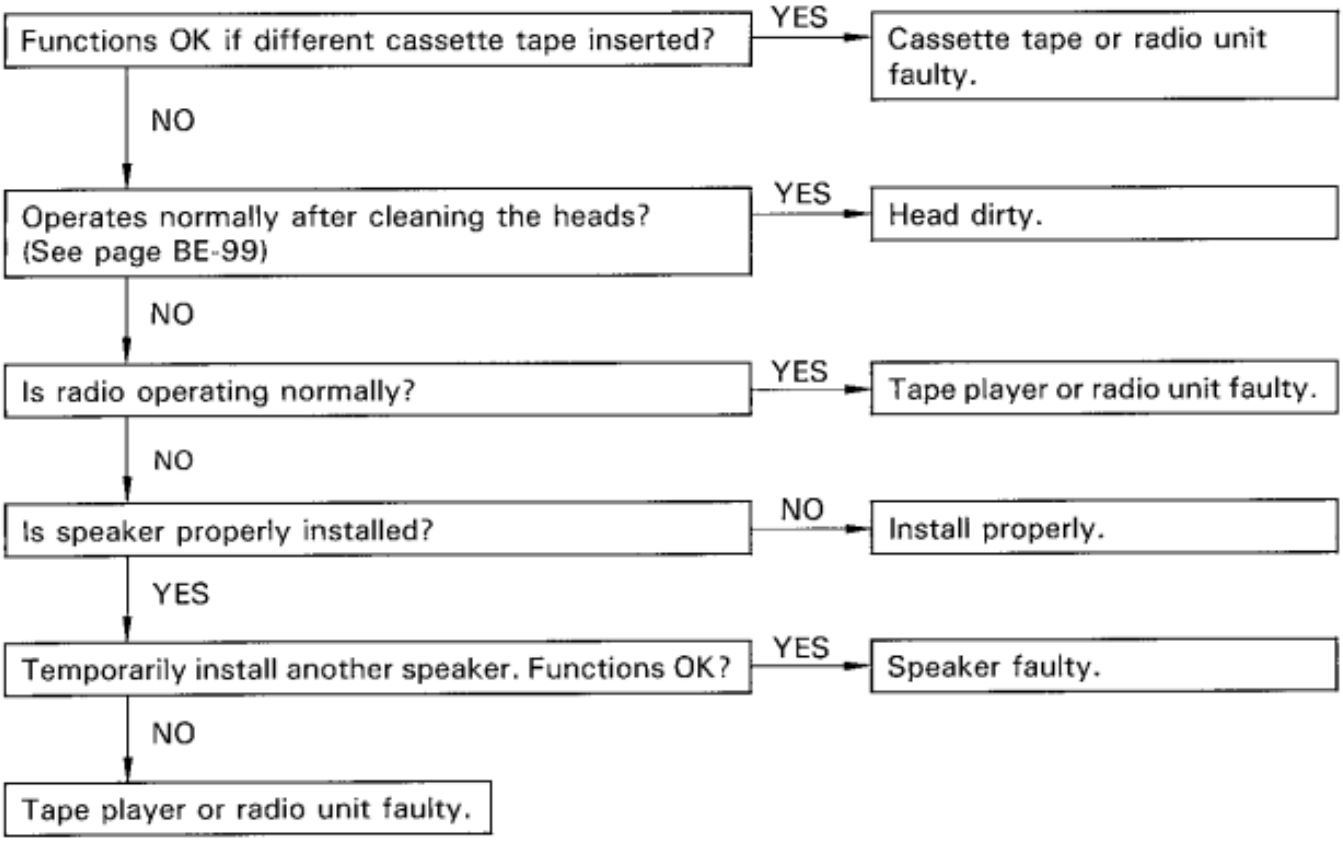

14 TAPE PLAYER TAPE JAMMED, MALFUNCTION WITH TAPE SPEED OR AUTO-REVERSE

[S] : Radio + Tape Player [U] : Radio — Tape Player

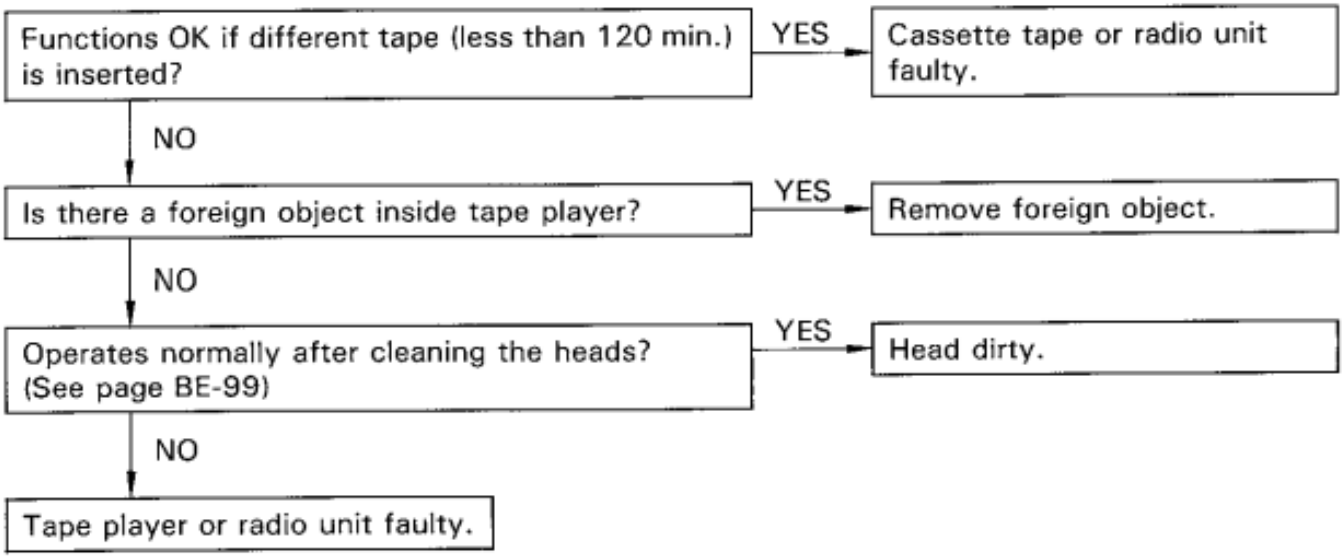

15 TAPE PLAYER APS, SKIP, RPT BUTTONS NOT OPERATING

Functions OK if different cassette tape inserted? NO → Tape player or radio unit faulty.

YES

Cassette tape faulty. (Less than 3 secs. of silence between songs (APS, RPT). Less then 15 secs. of silence (SKIP).)

16 TAPE PLAYER CASSETTE TAPE WILL NOT EJECT

[S] : Radio + Tape Player [U] : Radio — Tape Player

Is tape player operating normally? NO → Cassette tape jammed.

YES

Is tape player an electronic loading type? NO → Tape player or radio unit faulty.

YES

Is auto search button of radio operating normally? YES → Tape player or radio unit faulty.

NO

Check if DOME fuse is OK? NG → Replace fuse.

OK

Is +B applied to tape player? NO → +B wire harness faulty.

YES

Tape player or radio unit faulty.

17 NOISE — NOISE PRODUCED BY VIBRATION OR SHOCK WHILE DRIVING

- Is speaker properly installed?
  - NO → Install properly.
  - YES ↓
- Is each system correctly installed?
  - NO → Install properly.
  - YES ↓
- With vehicle stopped, lightly tap each system. Is noise produced?
  - YES → Each system faulty.
  - NO ↓
- Noise produced by static electricity accumulating in the vehicle body.

18 NOISE — NOISE PRODUCED WHEN ENGINE STARTS

- Whistling noise which becomes high-pitched when accelerator strongly depressed, disappears shortly after engine stops.
  - YES → Alternator noise.
  - NO ↓
- Whining noise occurs when A/C is operating.
  - YES → A/C noise.
  - NO ↓
- Scratching noise occurs during sudden acceleration, driving on rough roads or when ignition switch is turned on.
  - YES → Fuel gauge noise.
  - NO ↓
- Clicking sound heard when horn button is pressed, then released. Whirring/grating sound when pushed continuously.
  - YES → Horn noise.
  - NO ↓
- Murmuring sound, stops when engine stops.
  - YES → Ignition noise.
  - NO ↓
- Tick-tock noise, occurs in co-ordination with blinking of flasher.
  - YES → Turn signal noise.
  - NO ↓

CONTINUED ON NEXT PAGE

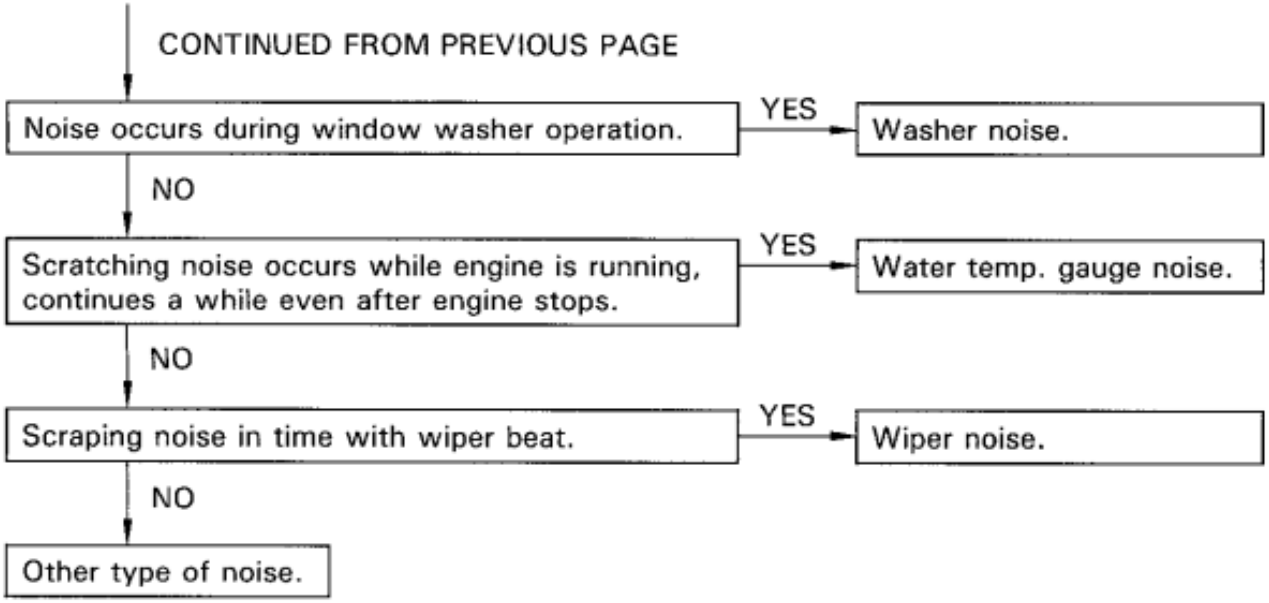

19 ANTENNA — ANTENNA-RELATED

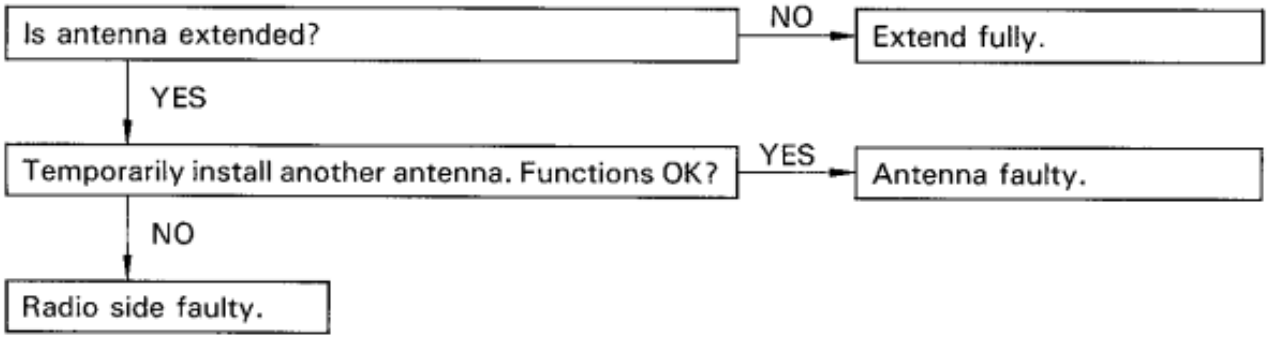

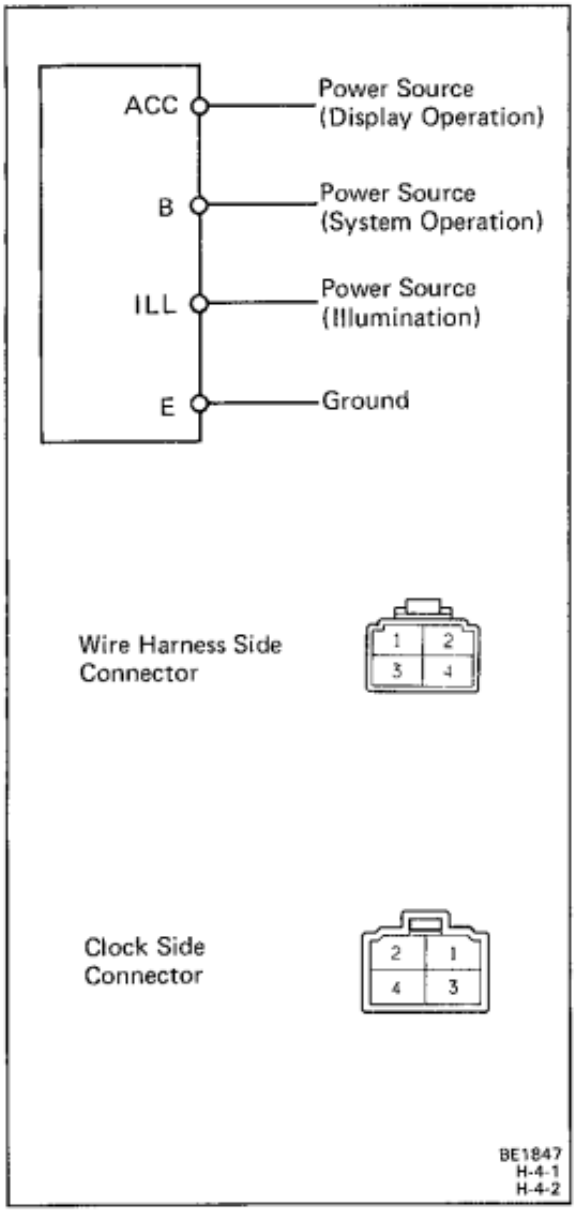

CLOCK

Troubleshooting

As shown in the illustration, those are clock circuit and connector diagrams. Inspect each terminal for applicable trouble.

Terminal		Condition	Specified value
1	E	Constant	Continuity
2	ILL	Turn light control switch ON	Battery Voltage
3	B	Constant	
4	ACC	Turn ignition switch ON	

Allowable error: **±1.5 seconds/day**
(DC 26V, 20°C (68°F)/12 V Vehicles)
(DC 13V, 20°C (68°F)/24 V Vehicles)

GENERAL INFORMATION

HANDLING PRECAUTIONS

If there is a possibility that the body and/ or parts may be damaged, first remove the danger before performing repair operations.

Example:

1. Apply protection tape to the body adjacent to the body parts when removing and installing.

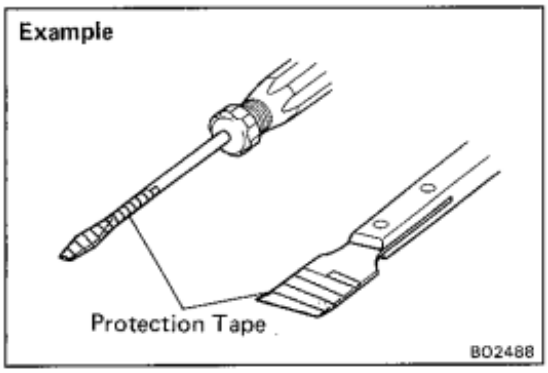

2. When prying off the body parts with a screwdriver or scraper etc., be sure to apply protection tape to the tip or blade to prevent damage to the paint film or body parts.

ANTI-RUST TREATMENT

If anti-rust agents are damaged while repairing other parts, be sure to repair the anti-rust agent.

Example:

1. If body sealant, paint film or undercoat are damaged by peeling, cracks, etc., be sure to repair each with an anti-rust agent.

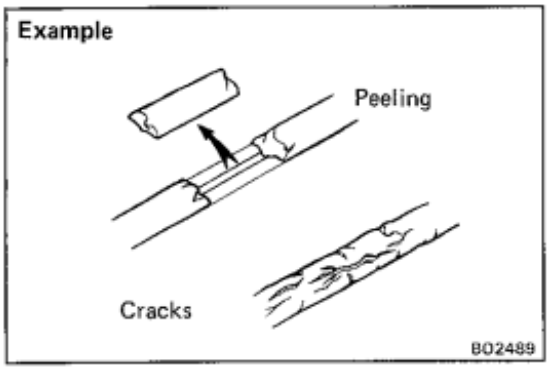

2. If a hinge or exterior body panel is loosened or removed, be sure apply rust inhibitor after repairs.

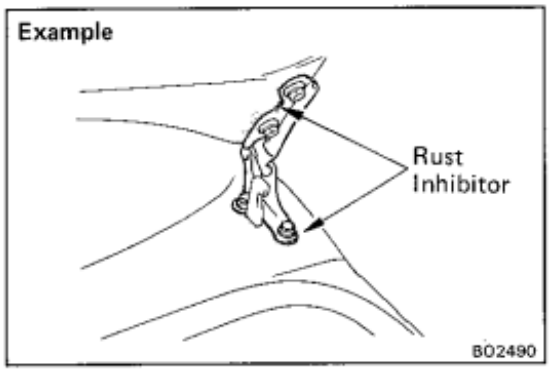

CLIPS

The removal and installation methods of typical clips used in body parts are shown in the table below.

HINT: If the clip is damaged during the operation, always replace it with a new clip.

Shape (Example)	Removal/Installation
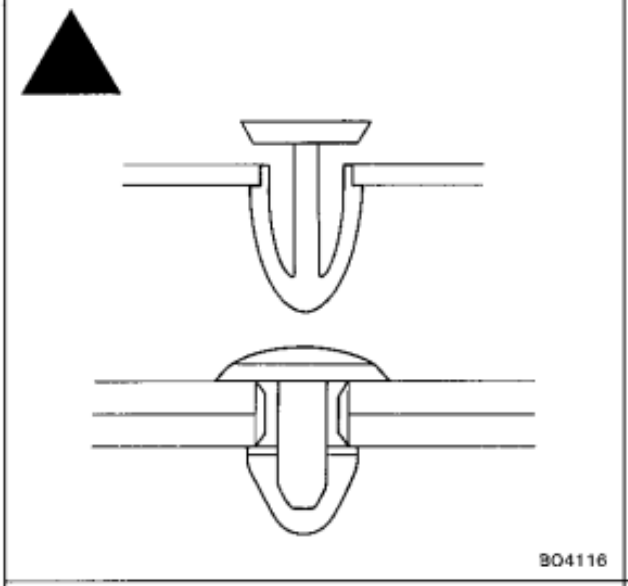 BO4116	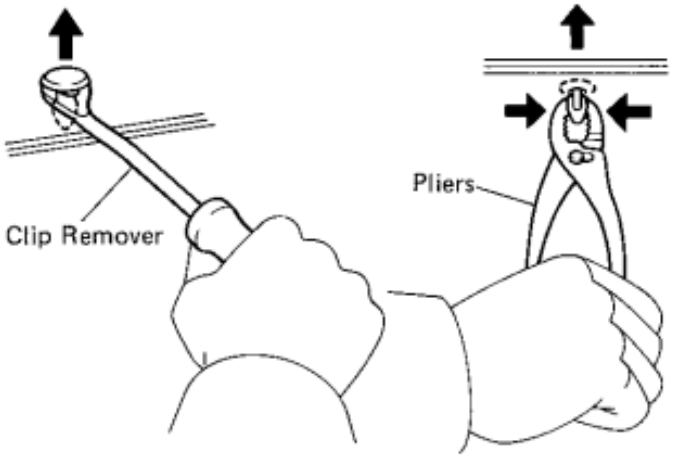 BO4117
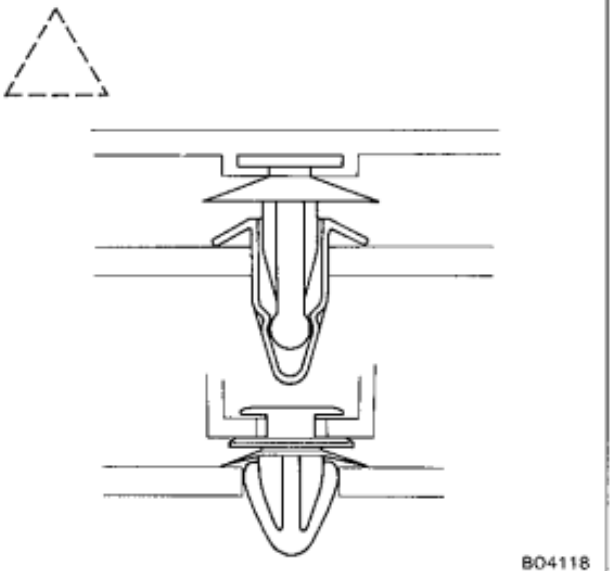 BO4118	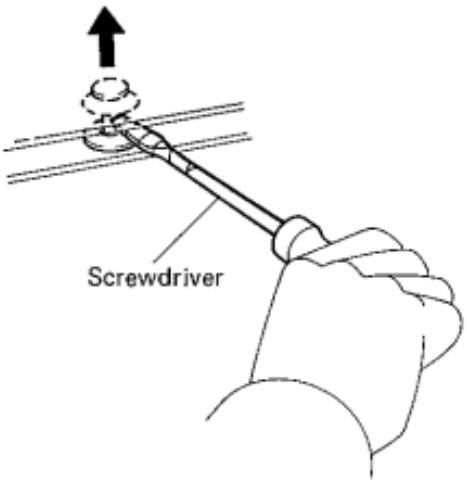 BO4119
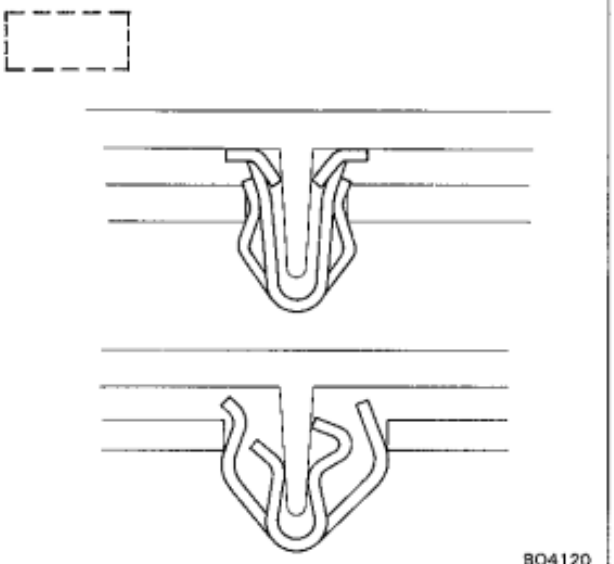 BO4120	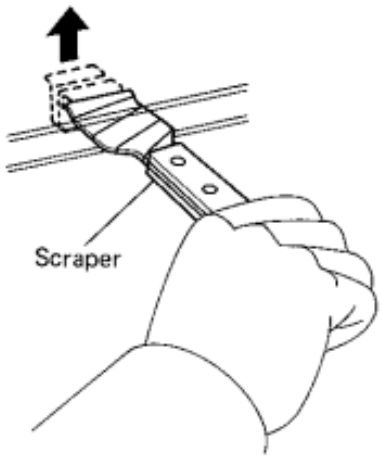 BO4121

CLIPS (Cont'd)

Shape (Example)	Removal/Installation
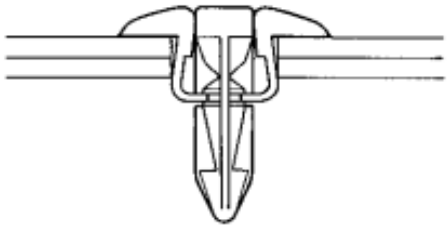 BO4122	Removal Installation 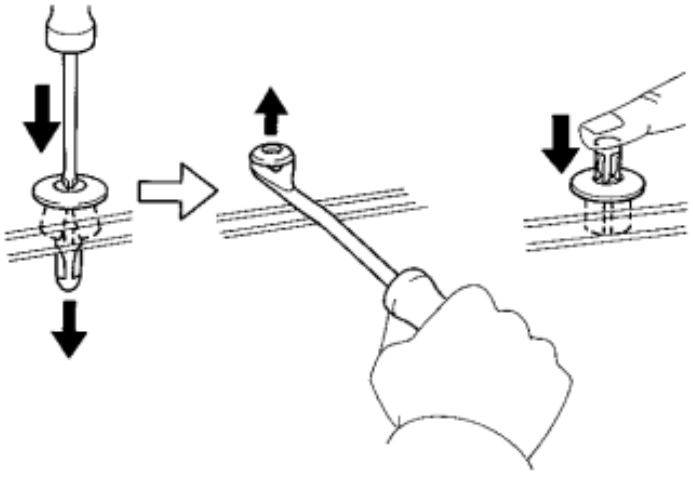 BO4123
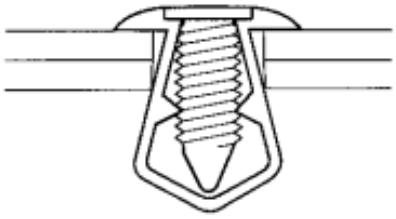 BO4124	Removal Installation 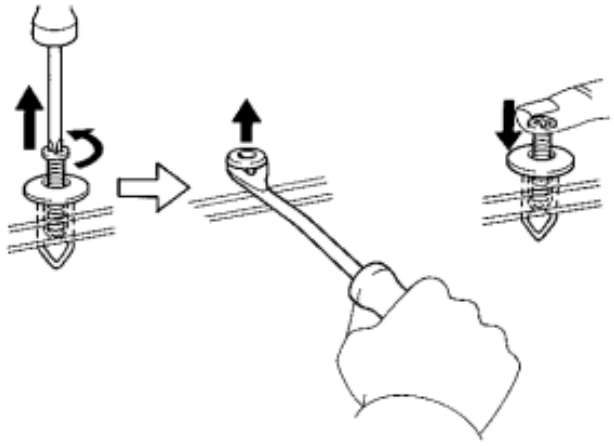 BO4125

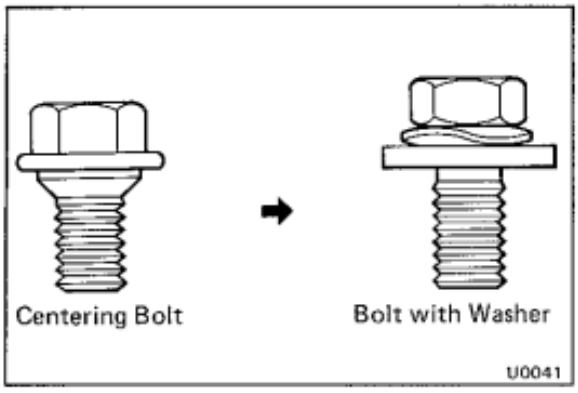

HOOD

ADJUSTMENT OF HOOD

HINT: Since the centering bolt is used as the hood hinge set bolt, the hood cannot be adjusted with it on. Substitute the bolt with the washer for the centering bolt.

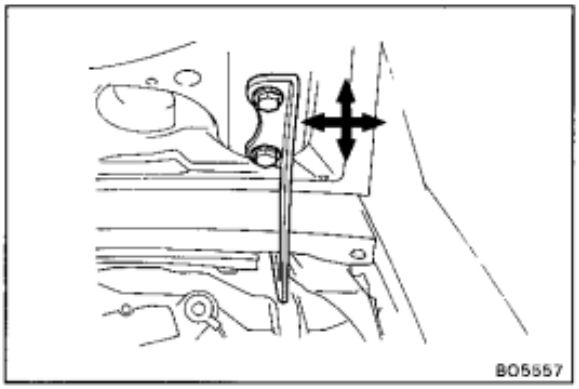

1. **ADJUST HOOD IN FORWARD/REARWARD AND LEFT/RIGHT DIRECTIONS**

Adjust the hood by loosening the hood side hinge bolts.

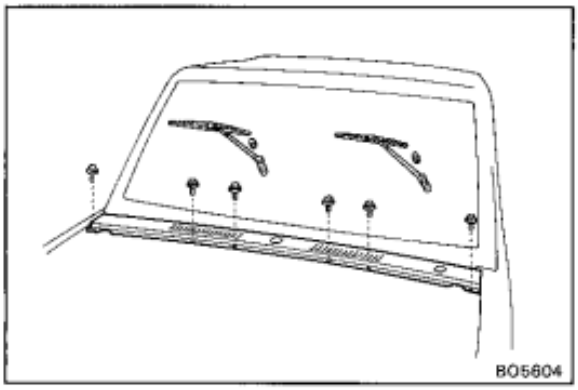

2. **ADJUST REAR EDGE OF HOOD IN VERTICAL DIRECTION**

(a) Remove two nuts and the wiper arms.

(b) Remove two clips, six screws and the cowl louver.

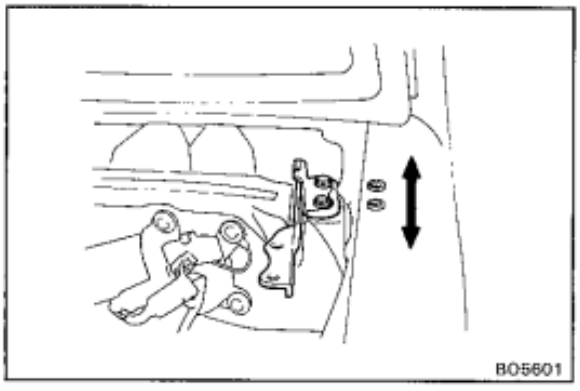

(c) Adjust the hood by increasing or decreasing the number of the shims.

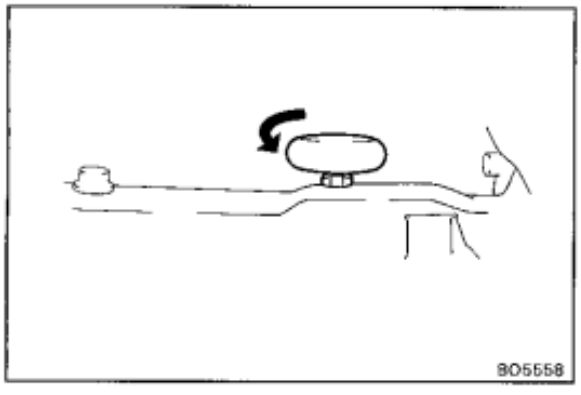

3. **ADJUST FRONT EDGE OF HOOD IN VERTICAL DIRECTIONS**

(a) Loosen the lock nut.

(b) Adjust the hood by turning the cushions.

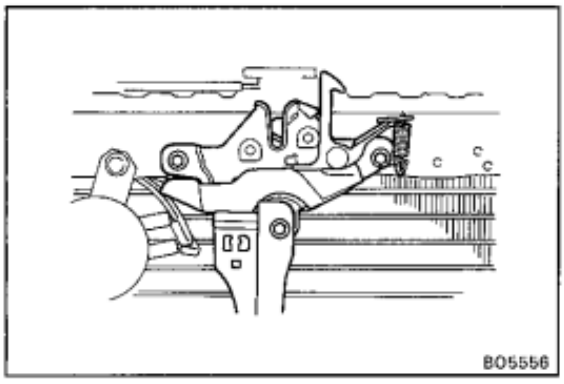

4. ADJUST HOOD LOCK

Adjust the lock by loosening bolts.

FRONT DOOR

COMPONENTS

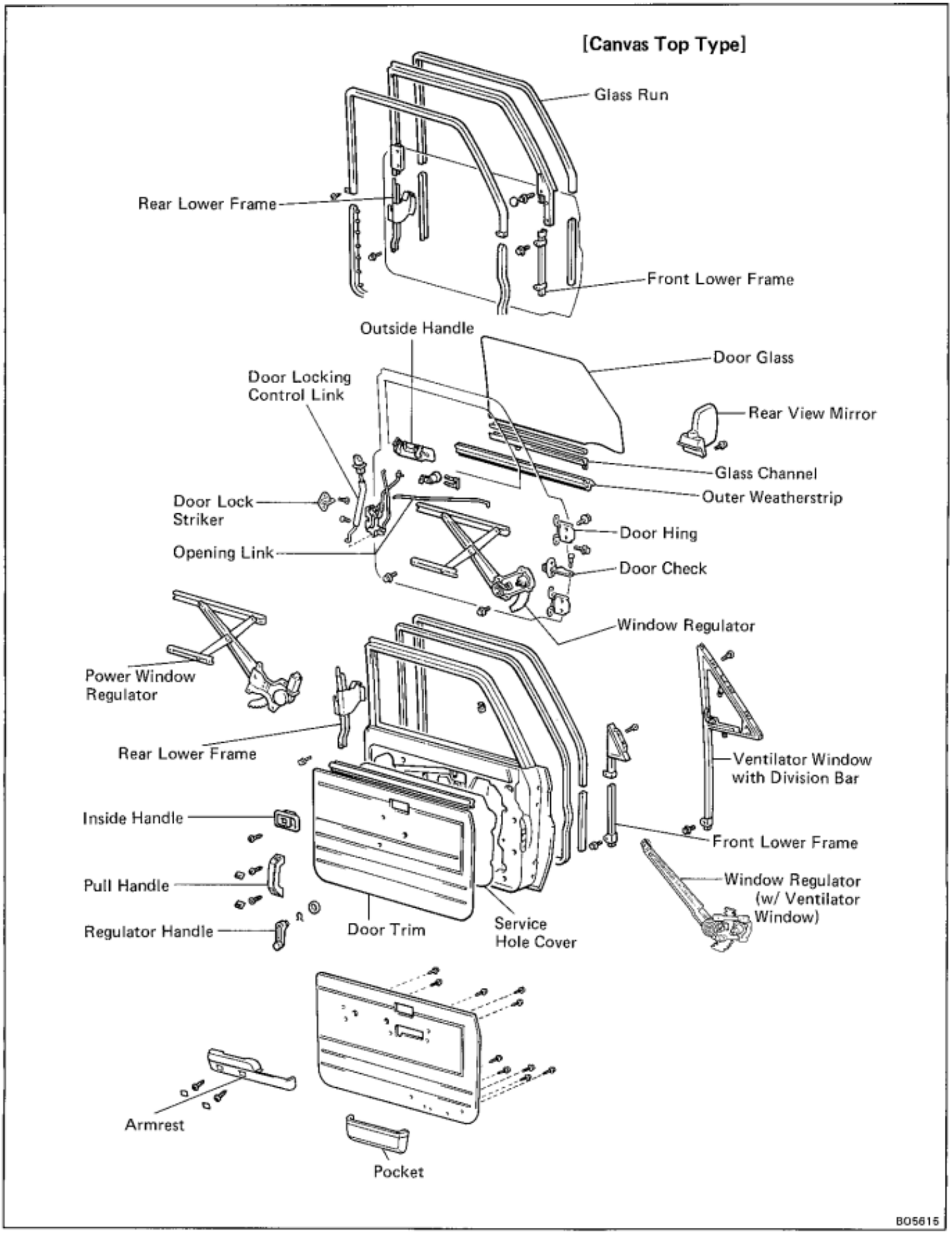

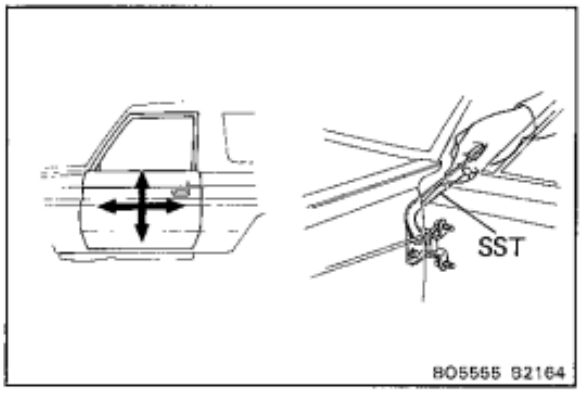

ADJUSTMENT OF FRONT DOOR

1. **ADJUST DOOR IN FORWARD/REARWARD AND VERTICAL DIRECTIONS**

   Using SST, adjust the door by loosening the body side hinge bolts.

   SST 09812-00010

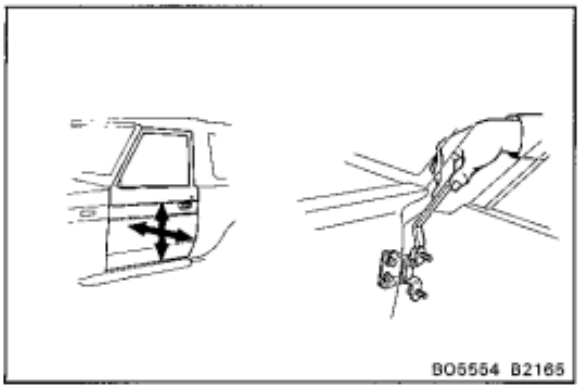

2. **ADJUST DOOR IN LEFT/RIGHT AND VERTICAL DIRECTIONS**

   Loosen the door side hinge bolts to adjust.

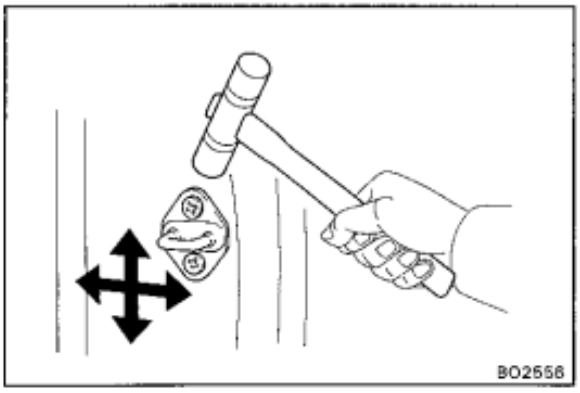

3. **ADJUST DOOR LOCK STRIKER**

   (a) Check that the door fit and door lock linkages are adjusted correctly.

   (b) Adjust the striker position by slightly loosening the striker mounting screws, and hitting the striker with a hammer.

   (c) Tighten the striker mounting screws again.

DISASSEMBLY OF FRONT DOOR

(See page BO-5)

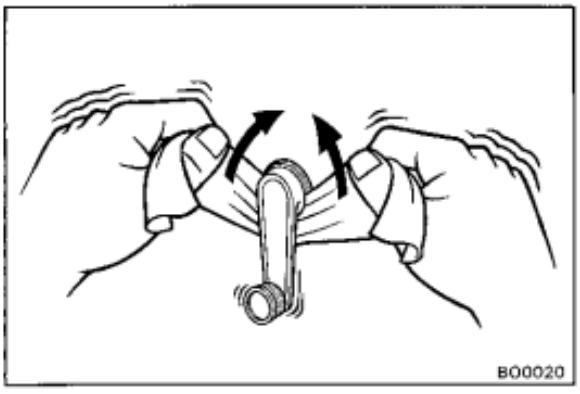

1. **(w/o Power Window)**
   REMOVE REGULATOR HANDLE

   Pull off the snap ring with a cloth and remove the regulator handle and plate.

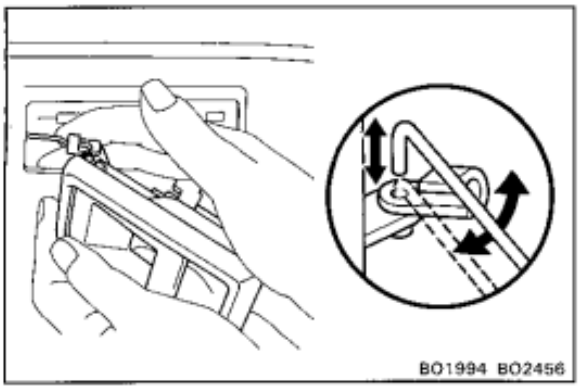

2. **REMOVE DOOR INSIDE HANDLE**

   (a) Remove the screw and slide the handle forward.

   (b) Disconnect the handle from the control link and remove the handle.

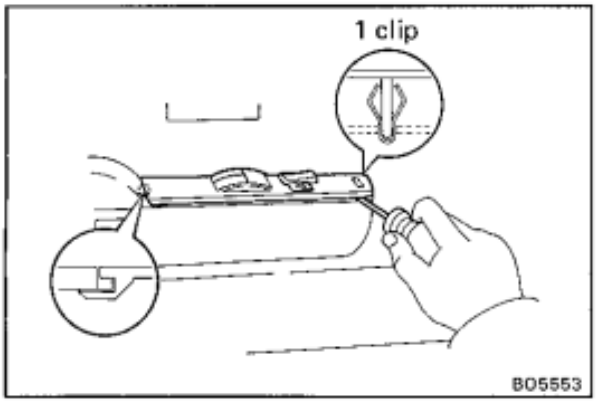

3. **(w/ Power Window)**
REMOVE ARMREST PANEL BASE UPPER

(a) Insert the screwdriver between the armrest and the armrest panel to pry out.

HINT: Tape the screwdriver tip before use.

(b) Slide the armrest panel forward to remove it, then disconnect the connector.

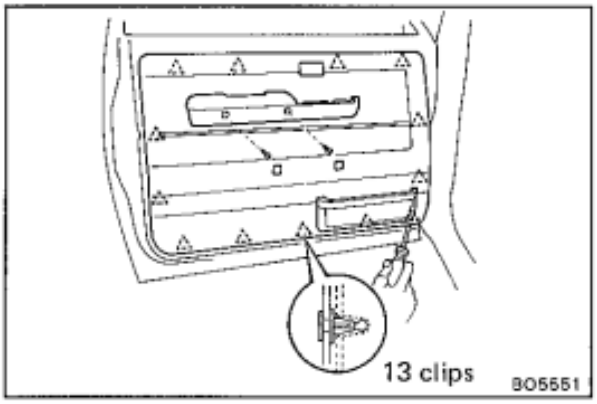

4. **REMOVE DOOR TRIM**

(a) (w/o Power Window)
Remove two screws and the armrest or remove two caps and remove the pull handle with two screws.

(b) (w/ Power Window)
Remove two caps and two screws from the armrest.

(c) (w/ Canvas Top)
Remove the screw and the service cover.

(d) Insert the screwdriver between the door and the door trim to pry out.

HINT: Tape the screwdriver tip before use.

(e) Remove the door trim.

(f) (w/ Power Window)
Remove five screws and the armrest from the door trim.

(g) Remove five screws and the door pocket from the door trim.

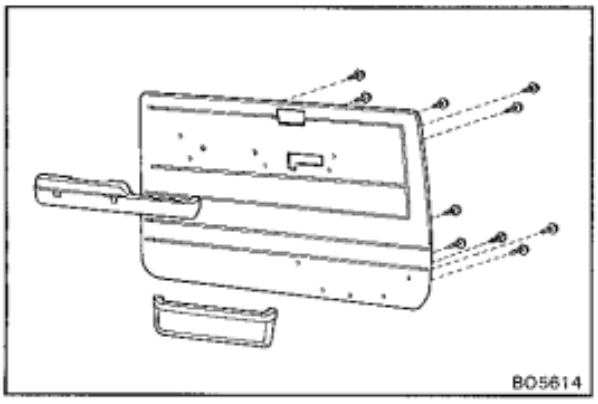

5. **REMOVE REAR VIEW MIRROR**

Remove two screws and the mirror.

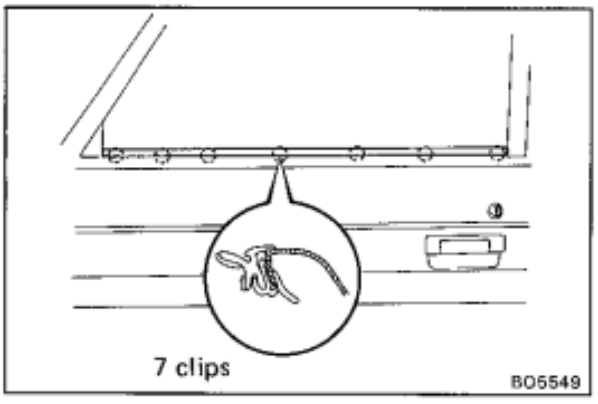

6. **REMOVE OUTER WEATHERSTRIP**

Pry loose the clips from the edge of the panel and remove the outer weatherstrip.

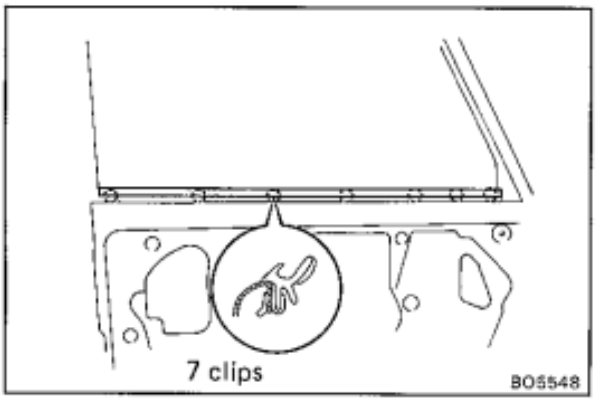

7. **REMOVE INNER WEATHERSTRIP**

Pry loose the clips from the edge of the panel and remove the inner weatherstrip.

8. **(w/ Power Window)**
REMOVE DOOR LOCK CONTROL RELAY

Remove three bolts and the relay.

9. **REMOVE SERVICE HOLE COVER**

10. **REMOVE GLASS RUN**

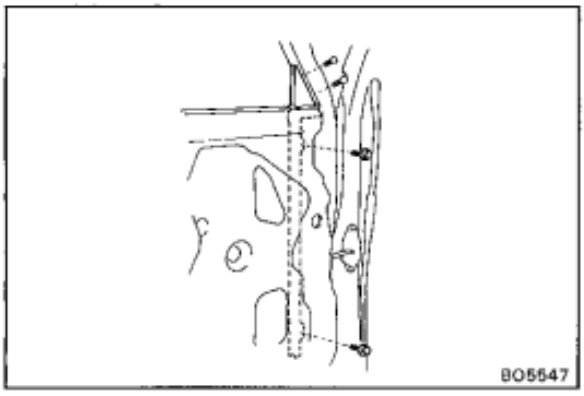

11.-1 (w/o Ventilator Window)
REMOVE FRONT LOWER FRAME

(w/ Canvas Top)
Remove two bolts and the frame.

(w/o Canvas Top)
Remove two screws, two bolts and the frame.

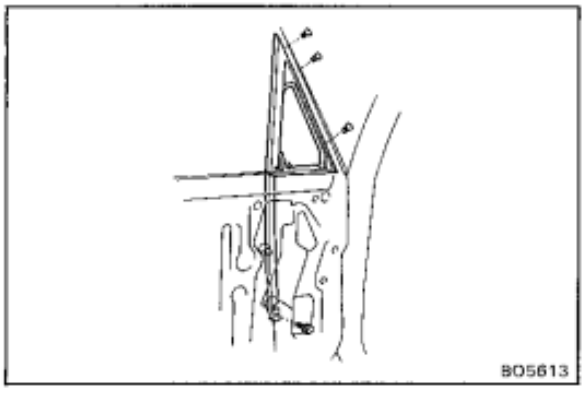

11.-2 (w/ Ventilator Window)
REMOVE VENTILATOR WINDOW

(a) Remove three screws and the bolt.

(b) Remove the ventilator window by pulling it upward.

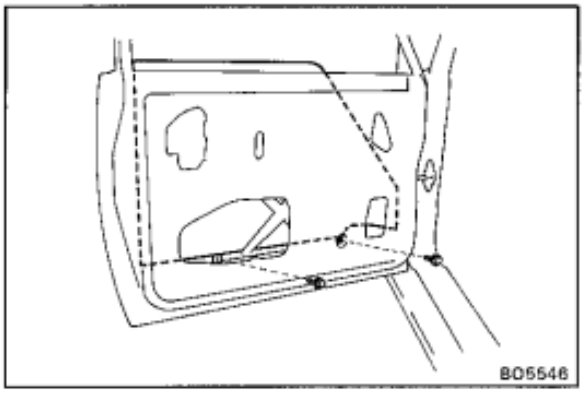

12. REMOVE DOOR GLASS

HINT: Insert a shop rag inside the panel to prevent scratching the glass.

(a) Remove two glass channel mounting bolts.

(b) Remove the door glass by pulling it upward.

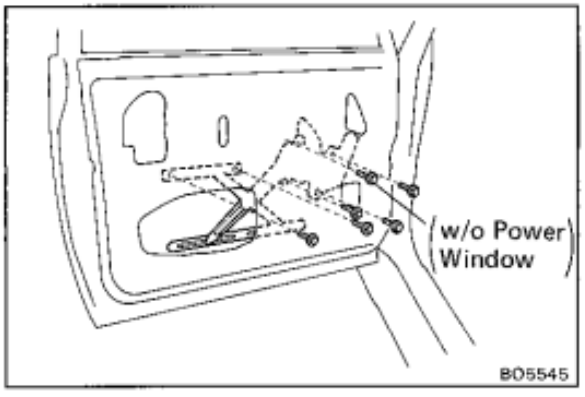

13. REMOVE WINDOW REGULATOR

(a) (w/o Ventilator Window)
Remove two equalizer arm bracket mounting bolts.

(b) (w/ Power Window)
Remove four regulator mounting bolts, then disconnect the connector.

(w/o Power Window)
Remove three regulator mounting bolts.

(c) Remove the regulator through the service hole.

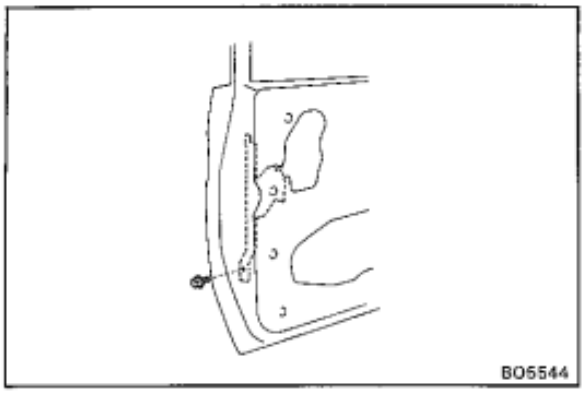

14. REMOVE REAR LOWER FRAME

Remove the bolt and the frame.

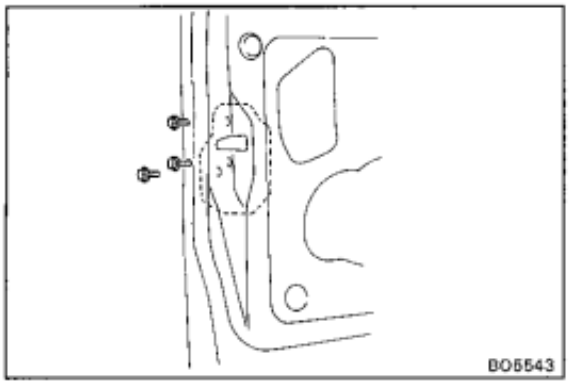

15. REMOVE DOOR LOCK

(a) Disconnect the links from the outside handle and the lock cylinder.

(b) Remove the lock knob.

(c) (w/ Power Door Lock)
Disconnect the connector.

(d) Remove three screws.

(e) Remove the door lock through the service hole.

16. REMOVE DOOR LOCK CYLINDER

Remove the retainer and the lock cylinder.

17. REMOVE OUTSIDE HANDLE

Remove two bolts and the handle.

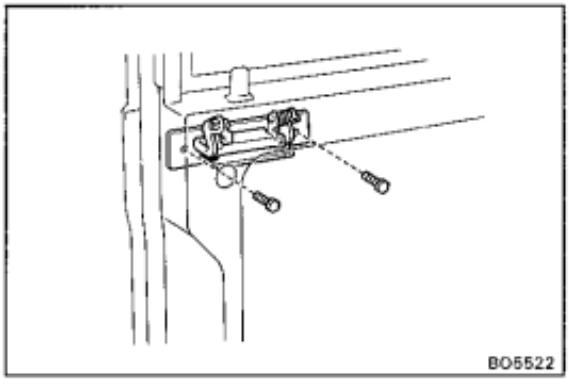

REPLACEMENT OF GLASS

1. REMOVE GLASS CHANNEL WITH SCREWDRIVER OR LIKE OBJECT

2. APPLY SOAPY WATER TO INSIDE OF WEATHERSTRIP

3. INSTALL CHANNEL BY TAPPING IT WITH PLASTIC HAMMER

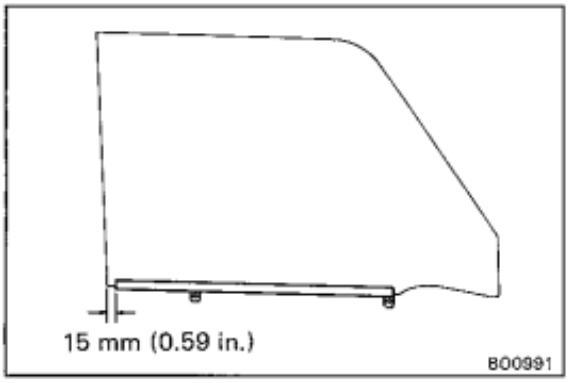

ASSEMBLY OF FRONT DOOR

(See page BO-7)

1. BEFORE INSTALLING PARTS, COAT THEM WITH MP GREASE

(a) Apply MP grease to the sliding surface and the gears of the window regulator.

NOTICE: Do not apply MP grease to the spring of the window regulator.

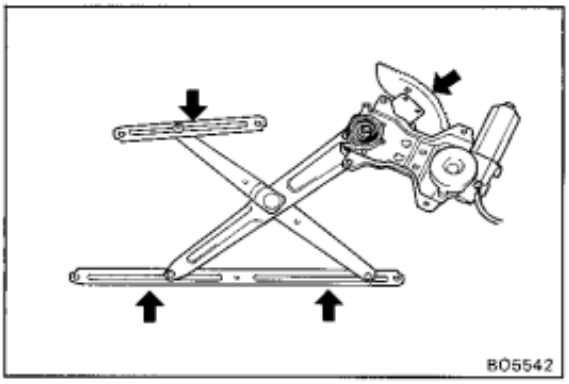

(b) Apply MP grease to the sliding surface of the door lock.

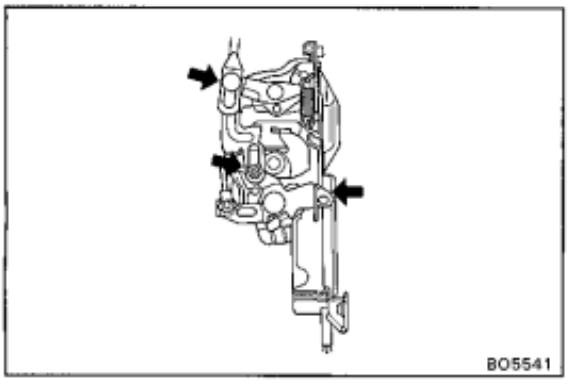

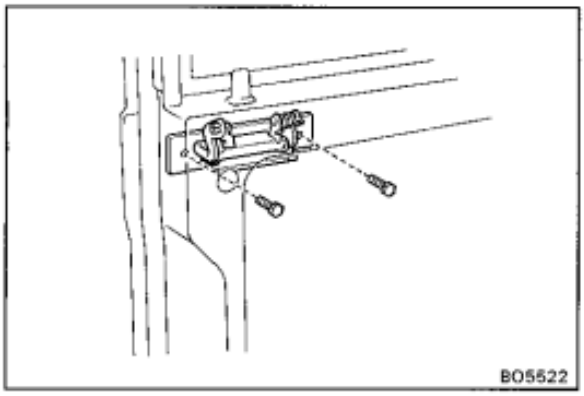

2. INSTALL OUTSIDE HANDLE

Install the handle with two bolts.

3. INSTALL DOOR LOCK CYLINDER

Install the lock cylinder with the retainer.

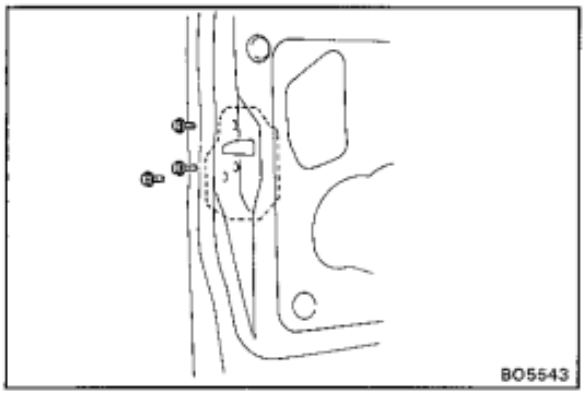

4. INSTALL DOOR LOCK

(a) Install the door lock with three screws.

(b) (w/ Power Door Lock)
Connect the connector.

(c) Connect the links to the outside handle and the lock cylinder.

(d) Install the lock knob.

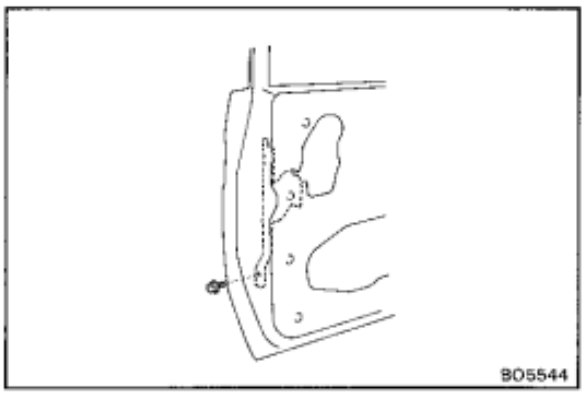

5. INSTALL REAR LOWER FRAME

Install the frame with the bolt.

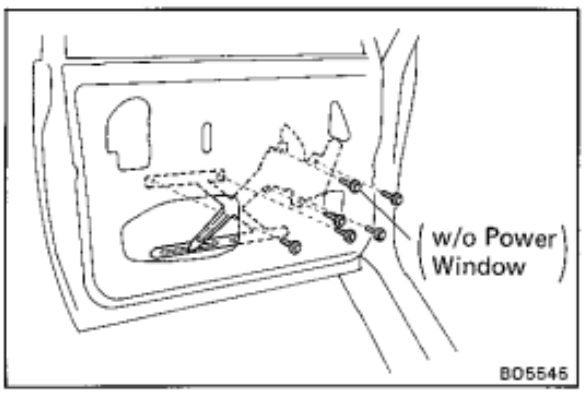

6. INSTALL WINDOW REGULATOR

(a) Place the regulator through the service hole.

(b) (w/ Power Window)
Install four regulator mounting bolts, then connect the connector.

(w/o Power Window)
Install three regulator mounting bolts.

(c) (w/o Ventilator Window)
Temporarity tighten two equalizer arm bracket bolts.

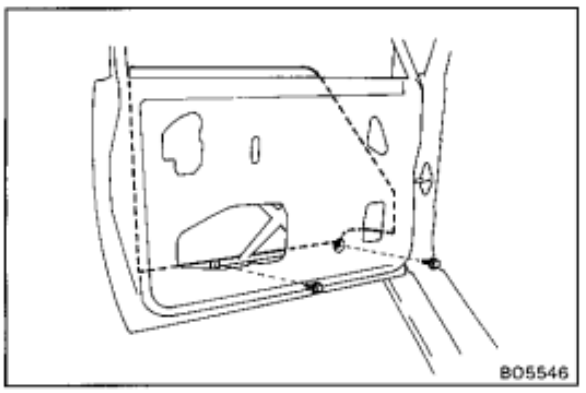

7. INSTALL DOOR GLASS

HINT: Insert a shop rag inside the panel to prevent scratching the glass.

(a) Place the glass in the door cavity

(b) Install two glass channel mounting bolts.

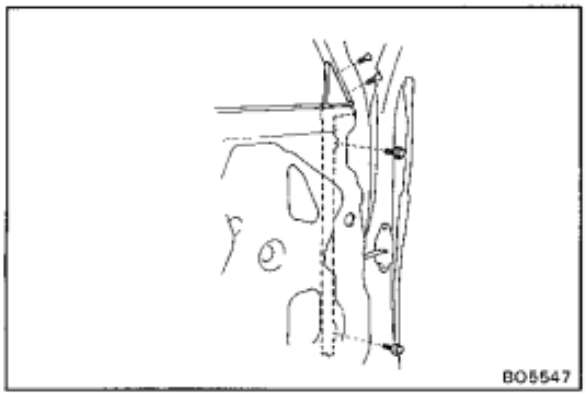

8.-1 (w/o Ventilator Window)
INSTALL FRONT LOWER FRAME

(w/ Canvas Top)
Install the frame with two bolts.

(w/o Canvas Top)
Install the frame with two screws and two bolts.

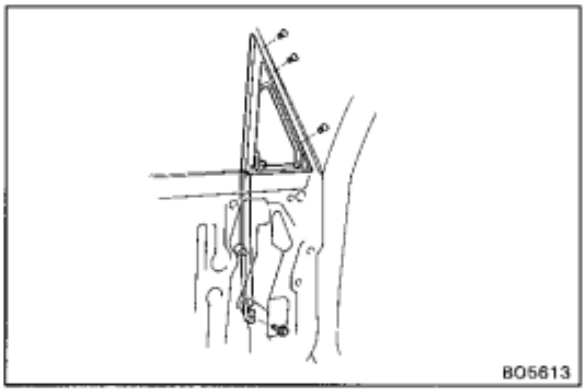

8.-2 (w/ Ventilator Window)
INSTALL VENTILATOR WINDOW

(a) Insert the ventilator window.

(b) Install three screws and the bolt.

9. INSTALL GLASS RUN

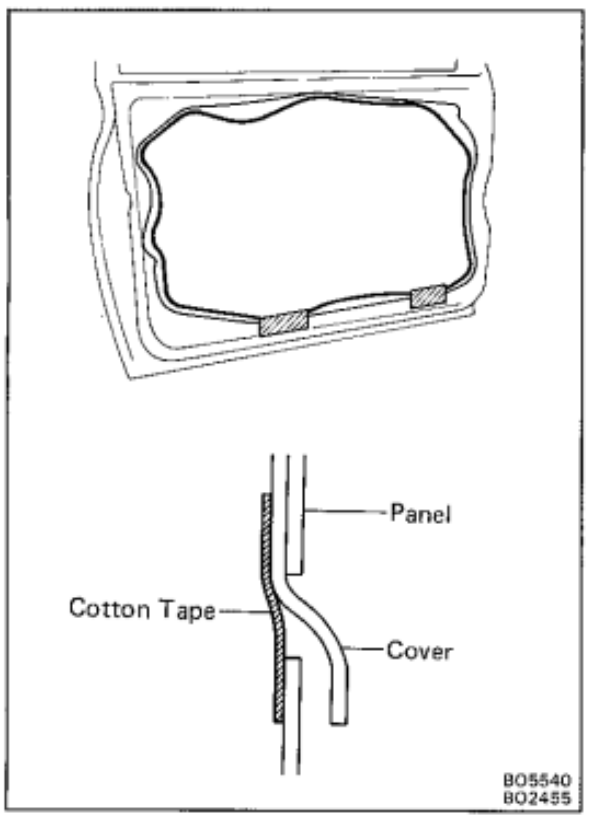

10. INSTALL SERVICE HOLE COVER

(a) Seal the service hole cover with adhesive.

(b) Insert the lower edge of the service hole cover into the panel slit.

(c) Seal the panel slit with the cotton tape.

NOTICE: Do not block the trim clip sealing with the tape.

11. (w/ Power Window)
INSTALL DOOR LOCK CONTROL RELAY

Install the relay with three bolts.

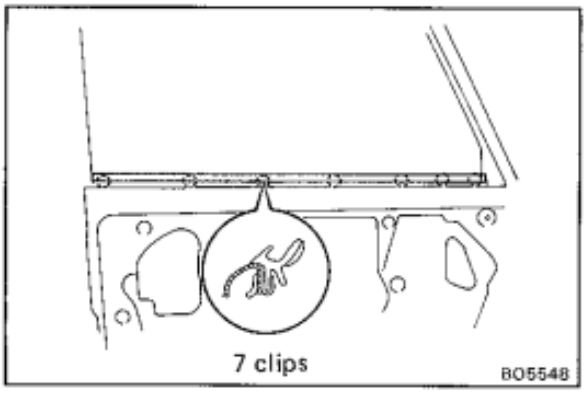

12. INSTALL INNER WEATHERSTRIP

Insert the claw of the clips into the upper panel slit and push the weatherstrip onto the panel.

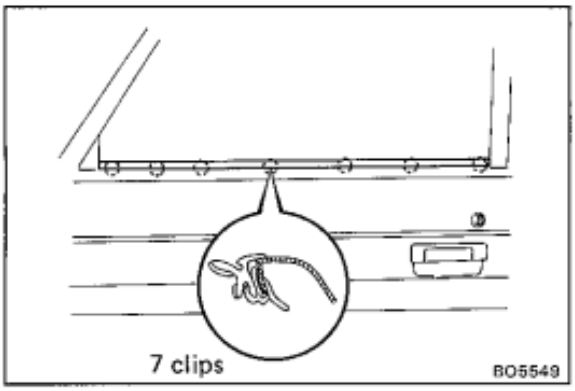

13. INSTALL OUTER WEATHERSTRIP

Insert the claw of the clips into the upper panel slit and push the weatherstrip onto the panel.

14. INSTALL REAR VIEW MIRROR

Install the mirror with two screws.

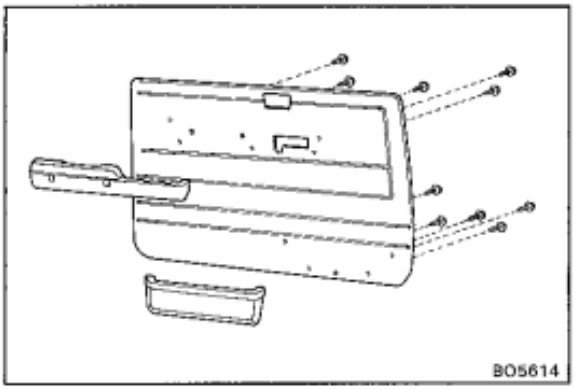

15. INSTALL DOOR TRIM

(a) Install the door pocket with five screws to the door trim.

(b) (w/ Power Window)
Install the armrest with five screws to the door trim.

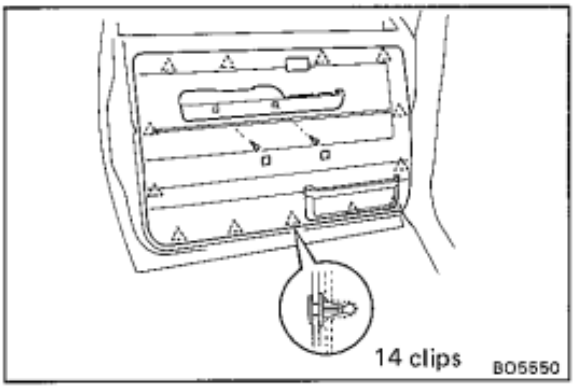

(c) Install the door trim with retainer to the inside panel by tapping.

(d) (w/ Canvas Top)
Install the service cover with the screw.

(e) (w/o Power Window)
Install the armrest with two screws or install the pull handle with two screws and two caps.

(f) (w/ Power Window)
Install two screws and two caps to the armrest.

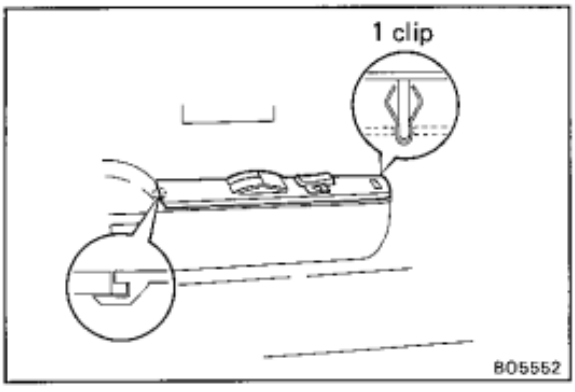

16. (w/ Power Window)
INSTALL ARMREST PANEL BASE UPPER

(a) Connect the connector.

(b) Slide the armrest panel rearward and tap the panel to install it.

17. INSTALL DOOR INSIDE HANDLE
(See step 2 on page BO-8)

(a) Connect the handle to the control link.

(b) Push the handle in the door panel and slide it rearward.

(c) Install the screw.

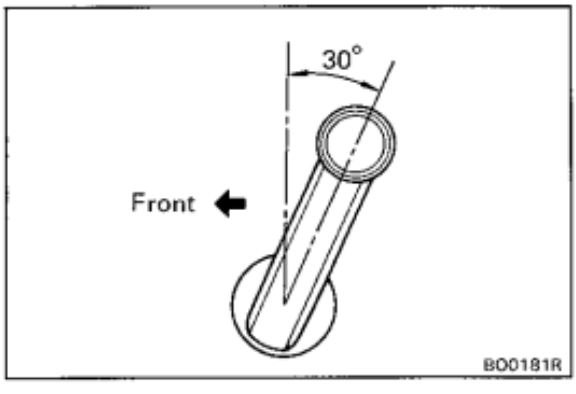

18. (w/o Power Window)
INSTALL REGULATOR HANDLE

With door window fully closed, install the plate and the regulator handle with the snap ring as shown.

BACK DOOR

COMPONENTS

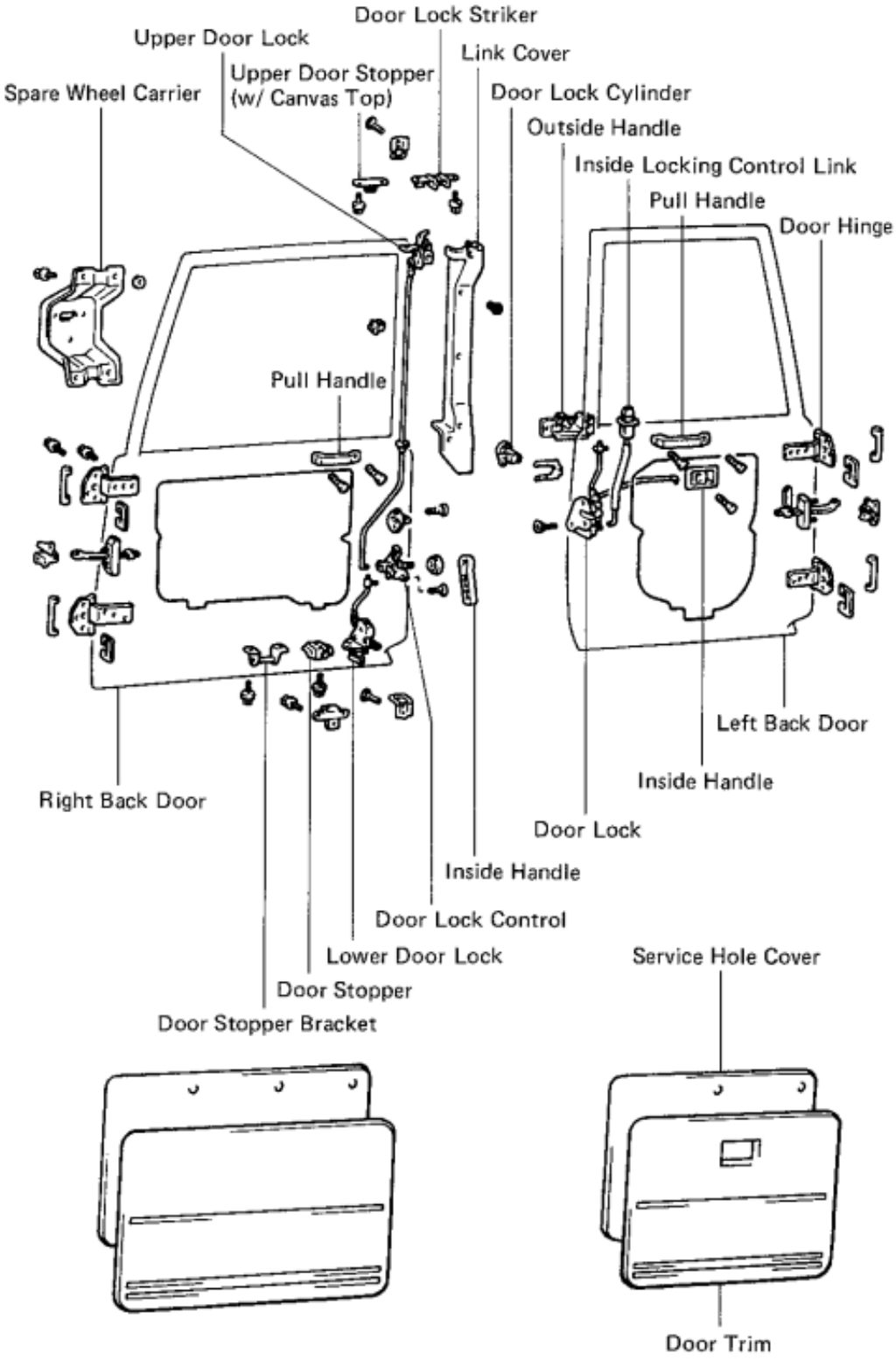

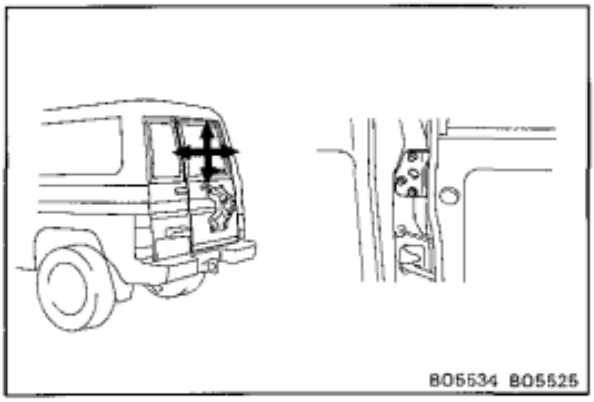

Right Back Door

ADJUSTMENT OF RIGHT BACK DOOR

1. ADJUST DOOR IN FORWARD/REARWARD AND VERTICAL DIRECTIONS

Loosen the body side hinge bolts to adjust.

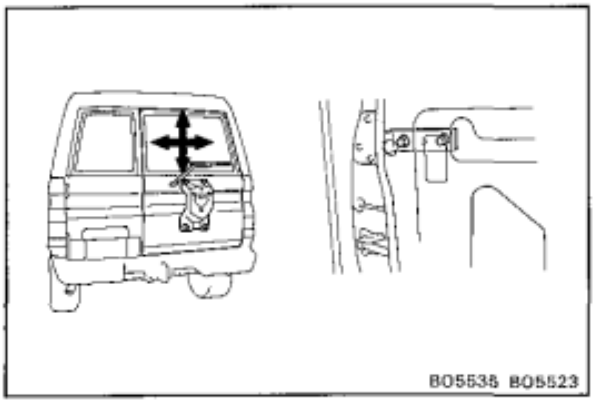

2. ADJUST DOOR IN LEFT/RIGHT AND VERTICAL DIRECTIONS

Loosen the door side hinge bolts to adjust.

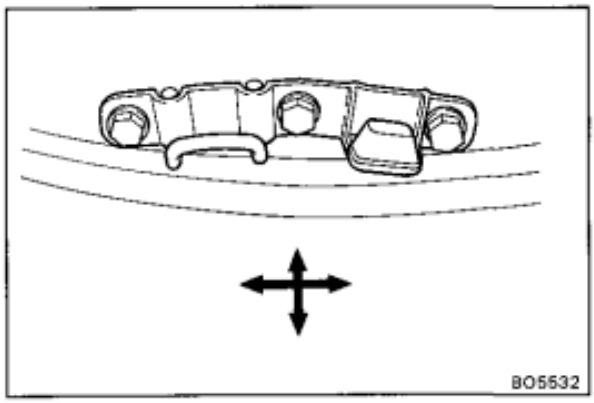

3. ADJUST DOOR LOCK STRIKER

(a) Check that the door fit and door lock linkages are adjusted correctly.

(b) Adjust the striker position by slightly loosening the striker mounting bolts or screws, and hitting the striker with a hammer.

(c) Tighten the striker mounting bolts or screws again.

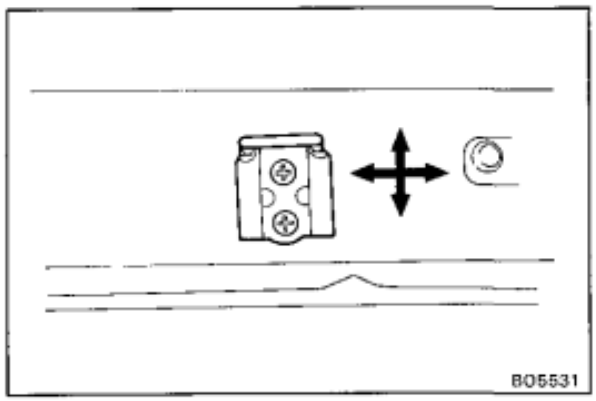

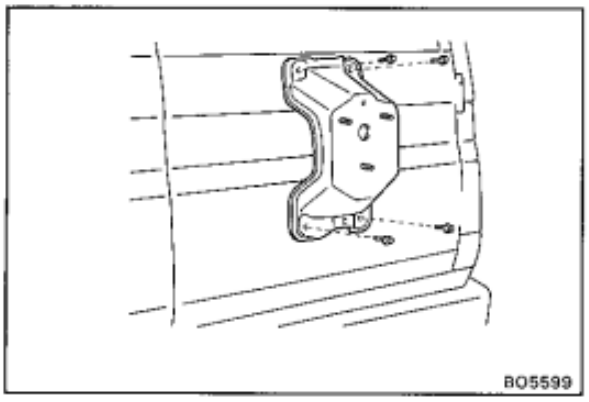

DISASSEMBLY OF RIGHT BACK DOOR

(See page BO-15)

1. **REMOVE SPARE WHEEL**

2. **REMOVE SPARE WHEEL CARRIER**

   Remove four bolts and spare wheel carrier.

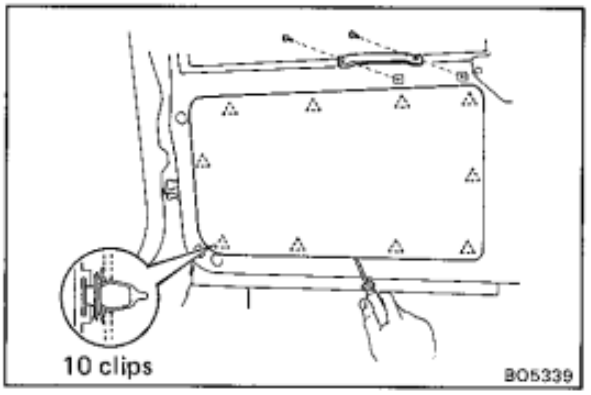

3. **REMOVE PULL HANDLE**

   Remove two screws and the handle.

4. **REMOVE DOOR TRIM**

   (a) Insert the screwdriver between the door and the door trim to pry out.

   HINT: Tape the screwdriver tip before use.

   (b) Remove the door trim.

5. **REMOVE SERVICE HOLE COVER**

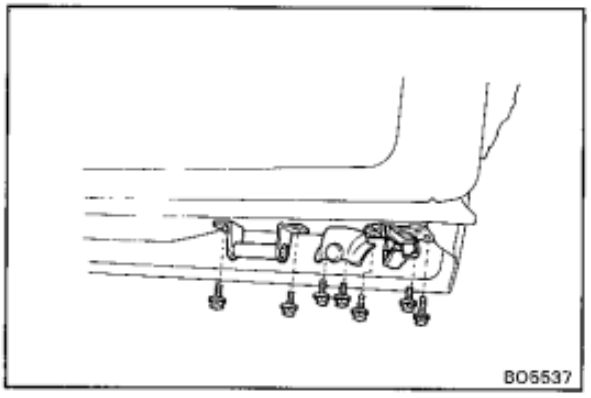

6. **REMOVE DOOR STOPPER**

   Remove two bolts and the stopper.

7. **REMOVE DOOR STOPPER BRACKET**

   Remove two bolts and the bracket.

8. **REMOVE LOWER DOOR LOCK**

   (a) Disconnect the link from the door lock control.

   (b) Remove three bolts and the door lock.

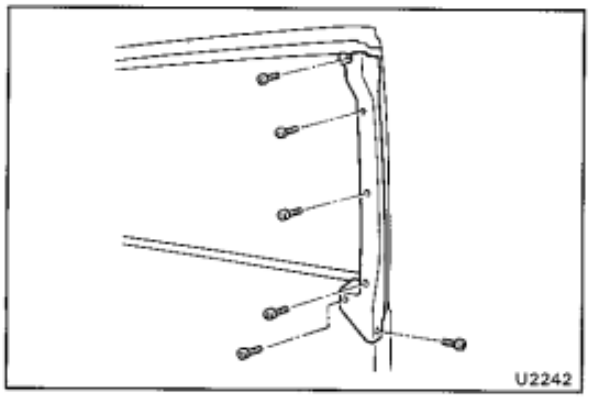

9. **(w/o Canvas Top)**
   REMOVE LINK COVER

   Remove six screws and the cover.

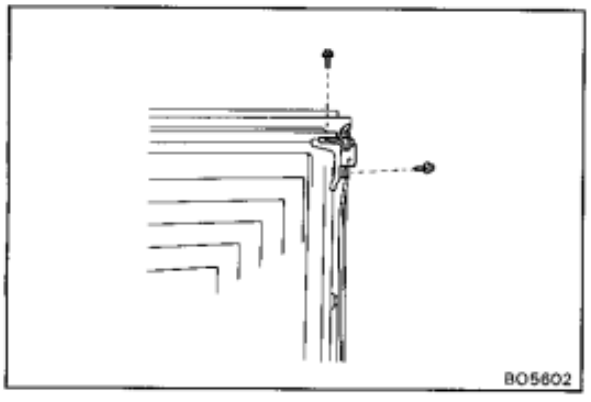

10. **(w/o Canvas Top)**
    REMOVE UPPER DOOR LOCK

    (a) Disconnect the link from the door lock control.

    (b) Remove two bolts and the door lock.

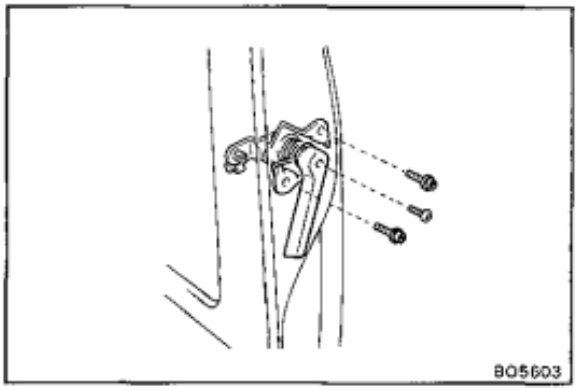

11. REMOVE DOOR LOCK CONTROL

(a) Remove the screw and the inside handle.

(b) Remove the screws and the door lock control.

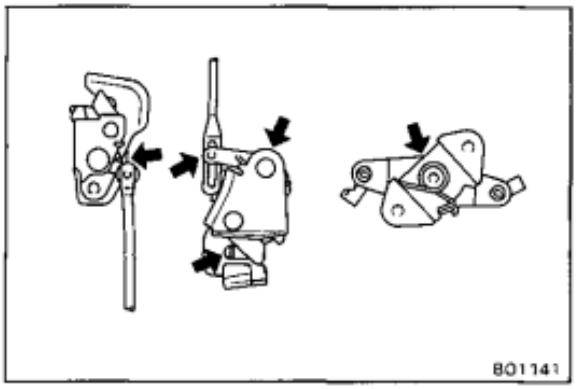

ASSEMBLY OF RIGHT BACK DOOR

(See page BO-15)

1. BEFORE INSTALLING PARTS, COAT THEM WITH MP GREASE

Apply MP grease to the sliding surface of the door lock and the door lock control.

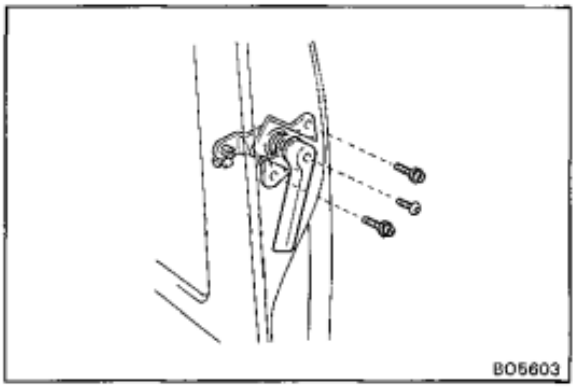

2. INSTALL DOOR LOCK CONTROL

(a) Install the door lock control with two screws.

(b) Install the inside handle with the screw.

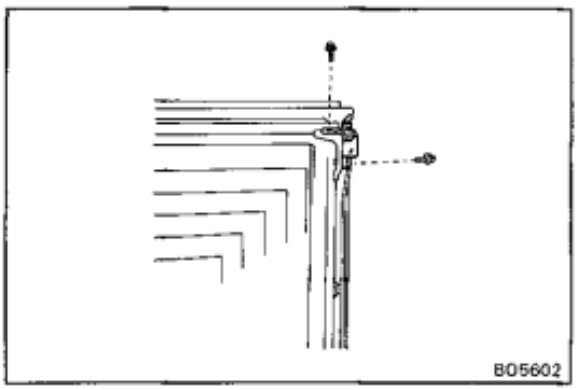

3. (w/o Canvas Top)
INSTALL UPPER DOOR LOCK

(a) Install the door lock with two bolts.

(b) Connect the link to the door lock control.

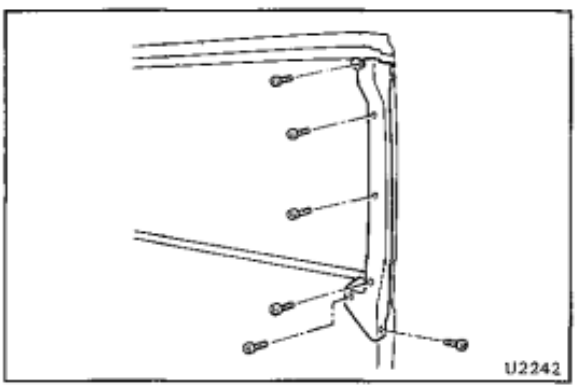

4. (w/o Canvas Top)
INSTALL LINK COVER

Install the cover with six screws.

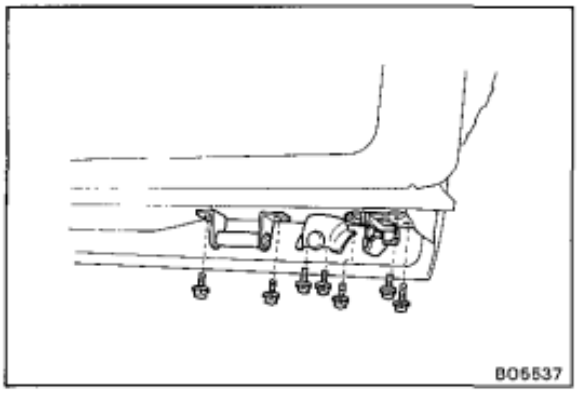

5. INSTALL LOWER DOOR LOCK

(a) Install the door lock with three bolts.

(b) Connect the link to the door lock control.

6. INSTALL *DOOR STOPPER BRACKET*

Install the bracket with two bolts.

7. INSTALL DOOR STOPPER

Install the stopper with two bolts.

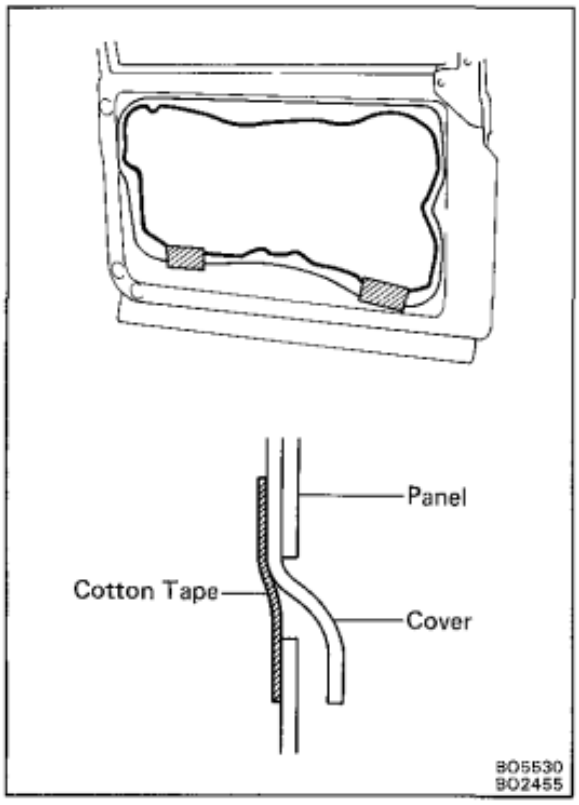

8. INSTALL SERVICE HOLE COVER

(a) Install the service hole cover with adhesive.

(b) Insert the lower edge of the service hole cover into the panel slit.

(c) Seal the panel slit with the cotton tape.

NOTICE: Do not block the trim clip sealing with the tape.

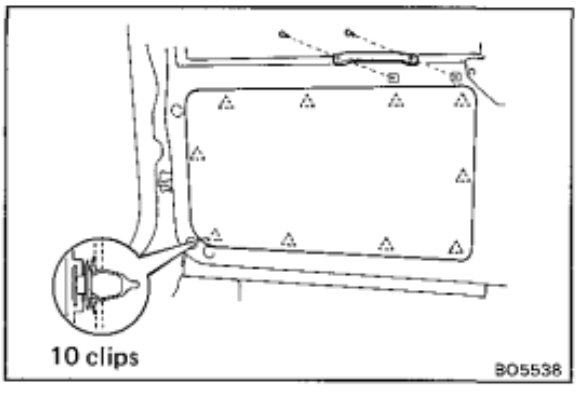

9. *INSTALL DOOR TRIM*

Install the door trim with retainer to the inside panel by tapping.

10. INSTALL PULL HANDLE

Install the handle with two screws.

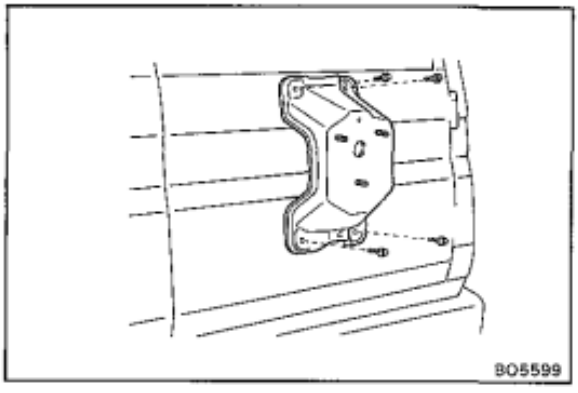

11. INSTALL SPARE WHEEL CARRIER

Install the spare wheel carrier with four bolts.

12. INSTALL SPARE WHEEL

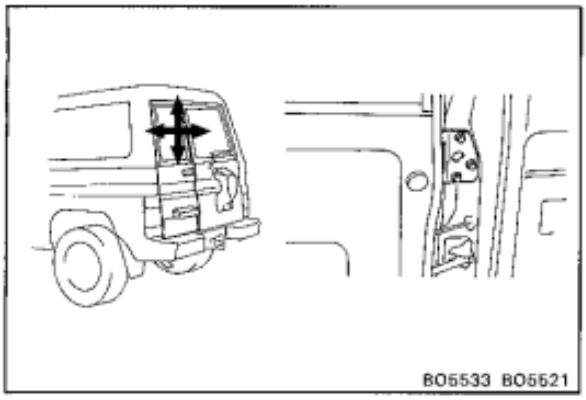

Left Back Door

ADJUSTMENT OF LEFT BACK DOOR

1. **ADJUST DOOR IN FORWARD/REARWARD AND VERTICAL DIRECTIONS**

   Loosen the body side hinge bolts to adjust.

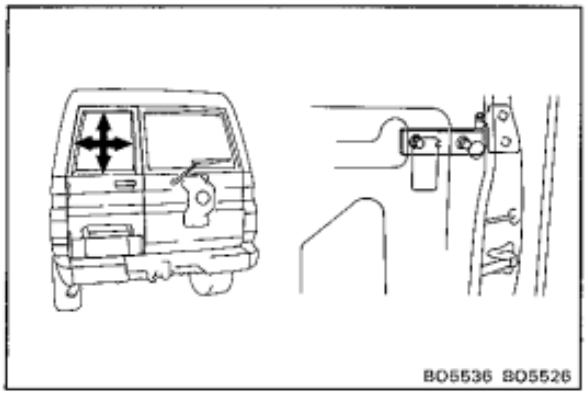

2. **ADJUST DOOR IN LEFT/RIGHT AND VERTICAL DIRECTIONS**

   Loosen the door side hinge bolts to adjust.

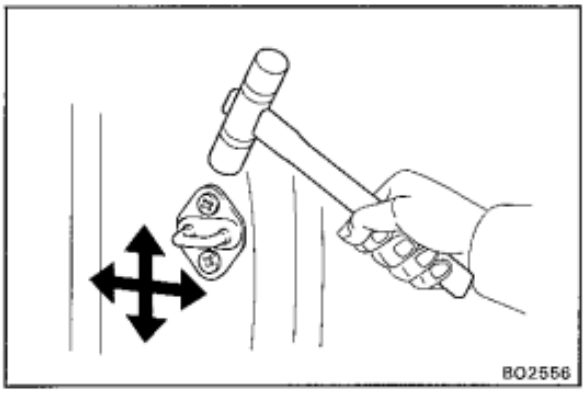

3. **ADJUST DOOR LOCK STRIKER**

   (a) Check that the door fit and door lock linkages are adjusted correctly.

   (b) Check that the right back door is adjusted correctly.

   (c) Adjust the striker position by slightly loosening the striker mounting bolts or screws, and hitting the striker with a hammer.

   (d) Tighten the striker mounting bolts or screws again.

DISASSEMBLY OF LEFT BACK DOOR

(See page BO-15)

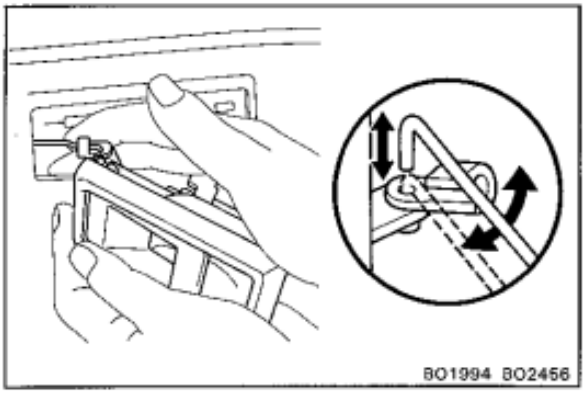

1. **REMOVE DOOR INSIDE HANDLE**

   (a) Remove the screw and slide the handle forward.

   (b) Disconnect the handle from the control link and remove the handle.

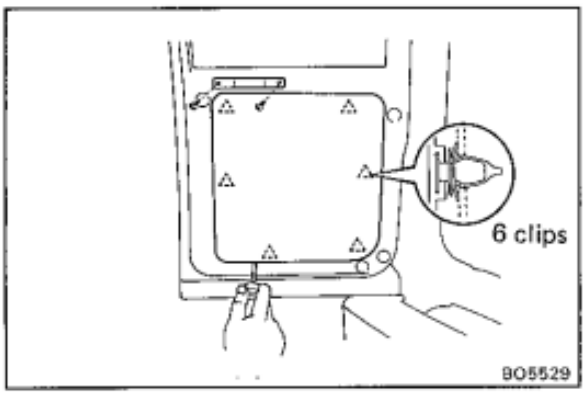

2. **REMOVE PULL HANDLE**

   Remove two screws and the handle.

3. **REMOVE DOOR TRIM**

   (a) Insert the screwdriver between the door and the door trim to pry out.

   HINT: Tape the screwdriver tip before use.

   (b) Remove the door trim.

4. **REMOVE SERVICE HOLE COVER**

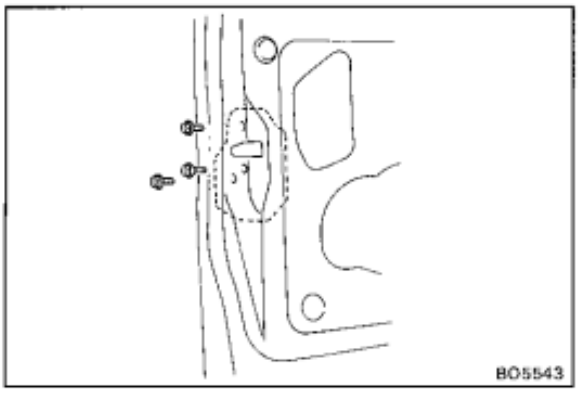

5. REMOVE DOOR LOCK

(a) Disconnect the links from the outside handle and the lock cylinder.

(b) Remove the lock knob.

(c) (w/ Power Door Lock)
Disconnect the connector.

(d) Remove three screws.

(e) Remove the door lock through the service hole.

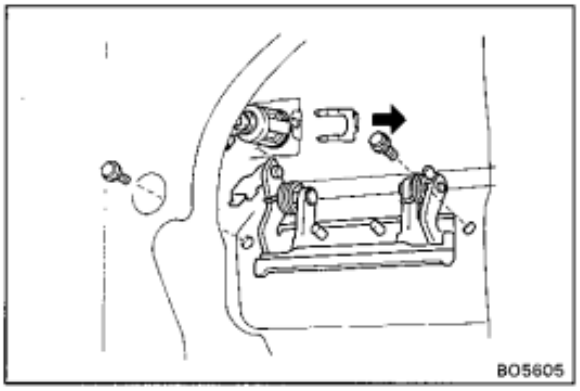

6. REMOVE DOOR LOCK CYLINDER

Remove the retainer and the lock cylinder.

7. REMOVE OUTSIDE HANDLE

Remove two bolts and the handle.

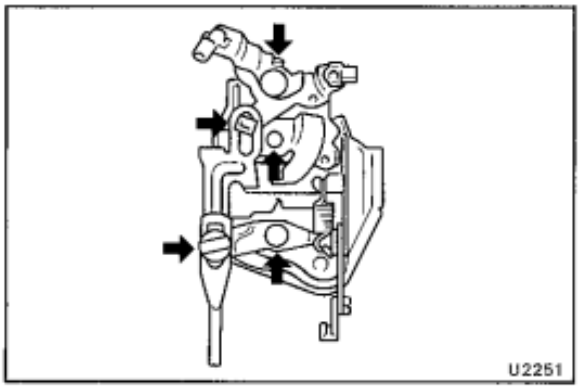

ASSEMBLY OF LEFT BACK DOOR

(See page BO-15)

1. BEFORE INSTALLING PARTS, COAT THEM WITH MP GREASE

Apply MP grease to the sliding surface of the door lock.

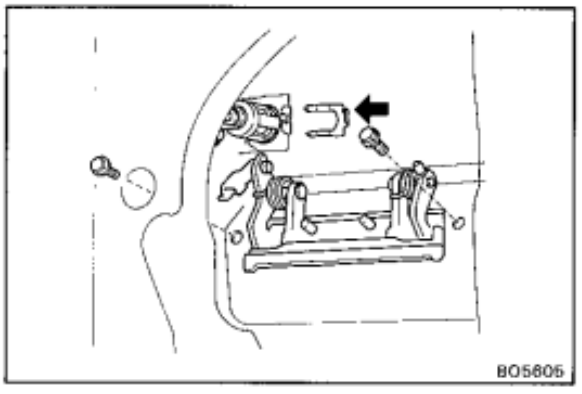

2. INSTALL OUTSIDE HANDLE

Install the handle with two bolts.

3. INSTALL DOOR LOCK CYLINDER

Install the lock cylinder with the retainer.

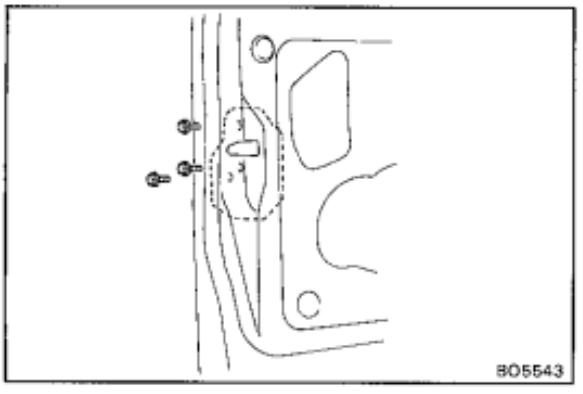

4. INSTALL DOOR LOCK

(a) Install the door lock with three screws.

(b) (w/ Power Door Lock)
Connect the connector.

(c) Connect the links to the outside handle and the lock cylinder.

(d) Install the lock knob.

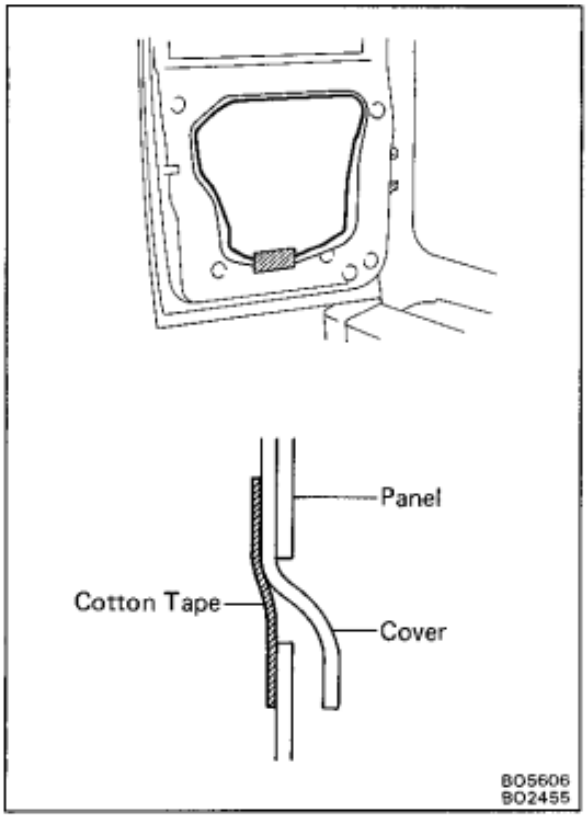

5. INSTALL SERVICE HOLE COVER

(a) Install the service hole cover with adhesive.

(b) Insert the lower edge of the service hole cover into the panel slit.

(c) Seal the panel slit with the cotton tape.

NOTICE: Do not block the trim clip sealing with the tape.

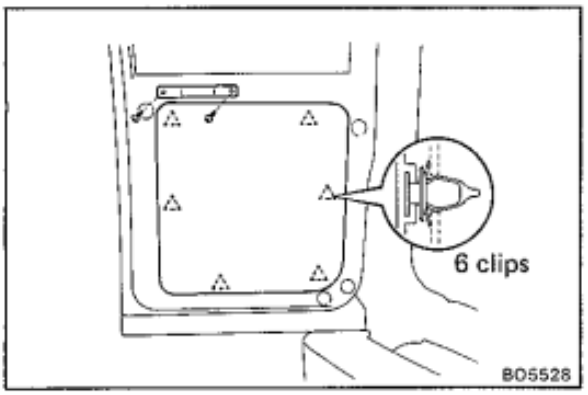

6. INSTALL DOOR TRIM

Install the door trim with retainer to the inside panel by tapping.

7. INSTALL PULL HANDLE

Install the handle with two screws.

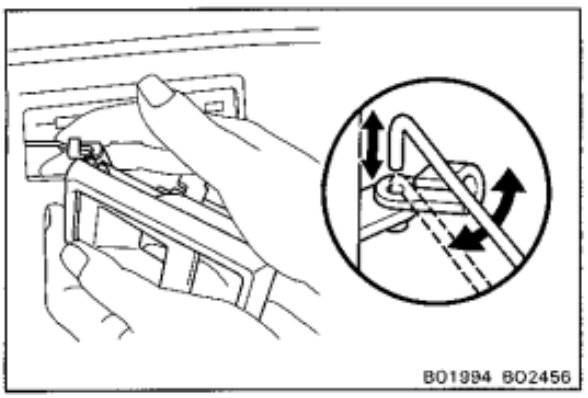

8. INSTALL DOOR INSIDE HANDLE

(a) Connect the handle to the control link.

(b) Push the handle in the door panel and slide it rearward.

(c) Install the screw.

MOULDING

Windshield Moulding

COMPONENTS

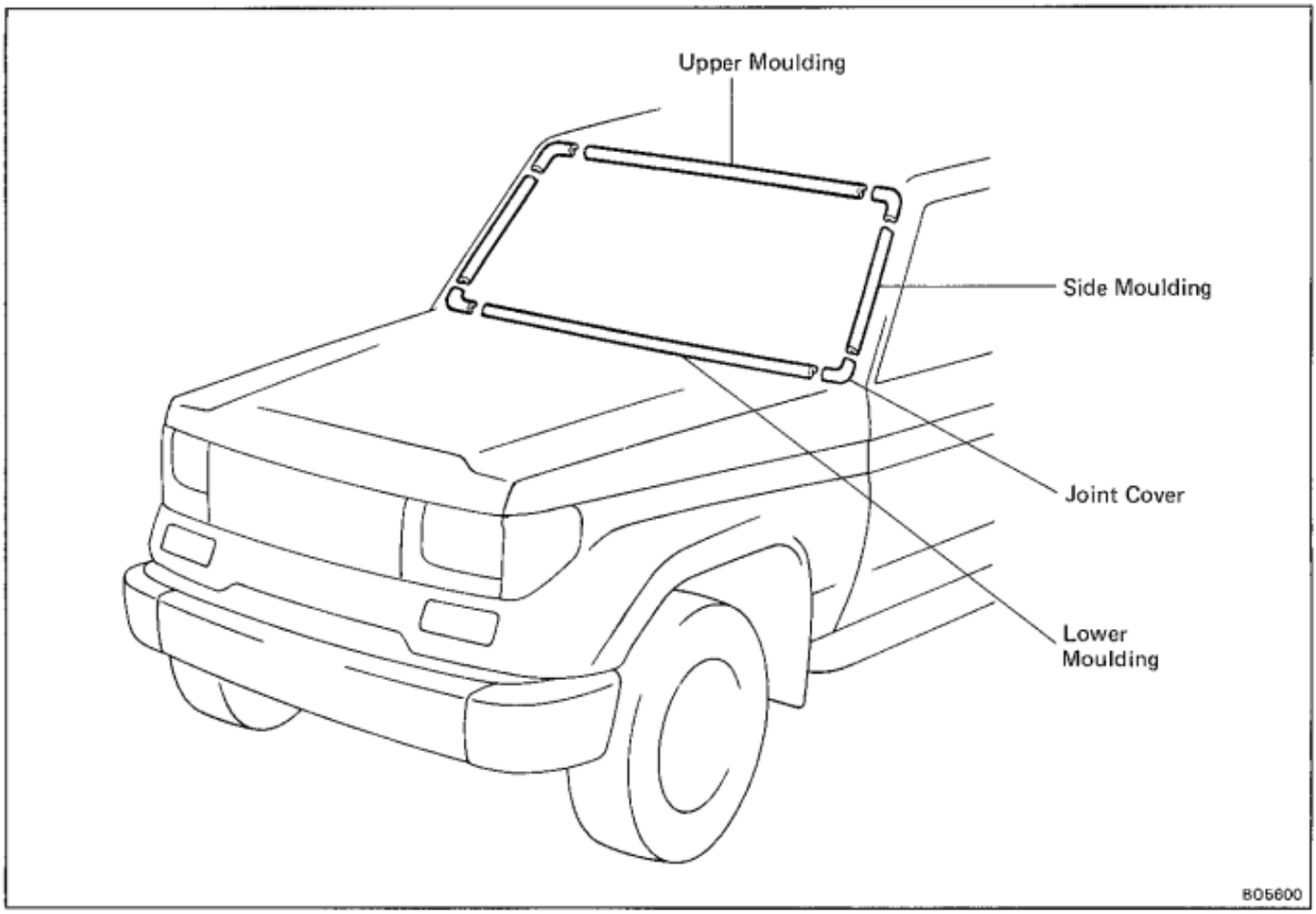

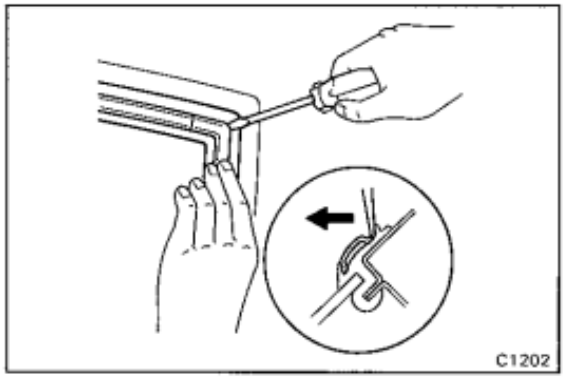

REMOVAL OF WINDSHIELD MOULDING

REMOVE JOINT COVER AND MOULDING

(a) Insert a screwdriver between the weatherstrip and joint cover to pry it out.

HINT: Tape the screwdriver tip before use.

(b) Remove the moulding from the end with a screwdriver or similar tool.

(c) Pull the windshield moulding with your hand.

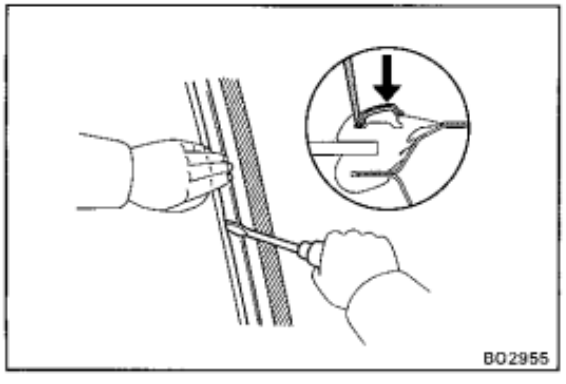

INSTALLATION OF WINDSHIELD MOULDING

INSTALL MOULDING AND JOINT COVER

(a) Apply the soapy water to the weatherstrip and the moulding.

(b) Insert oneside of the moulding rip onto the weatherstrip.

(c) Using a screwdriver, install the moulding and the joint cover.

HINT: Tape the screwdriver tip before use.

Body Outside Moulding

COMPONENTS

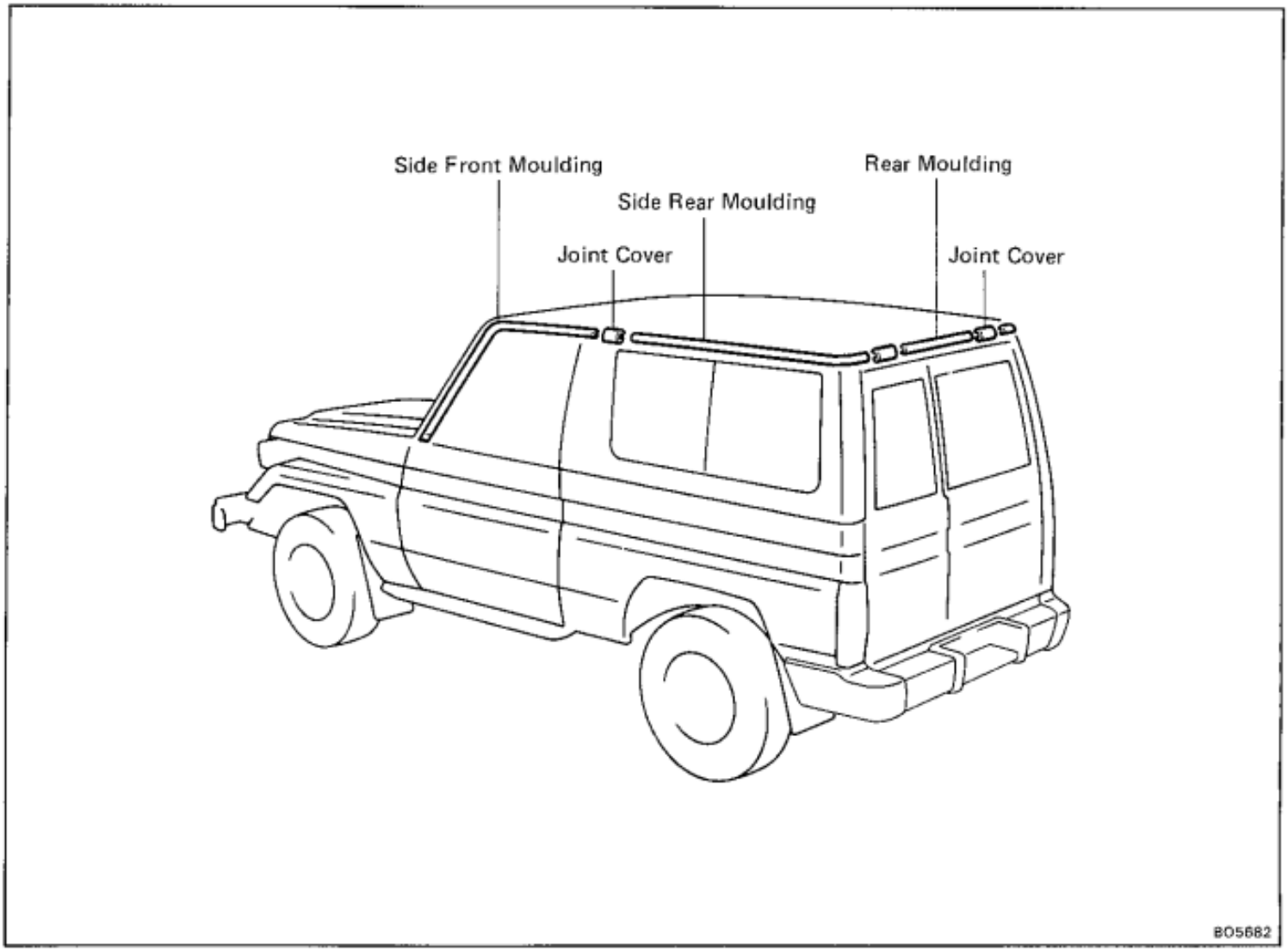

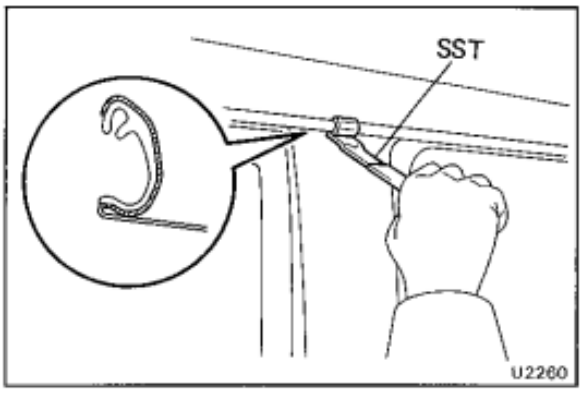

REMOVAL OF BODY OUTSIDE MOULDING

REMOVE JOINT COVER AND MOULDING

(a) Insert the SST to the bottom side of the joint cover and remove it.

SST 09806-30010

(b) Latch the SST to the bottom side of the moulding and remove it.

SST 09806-30010

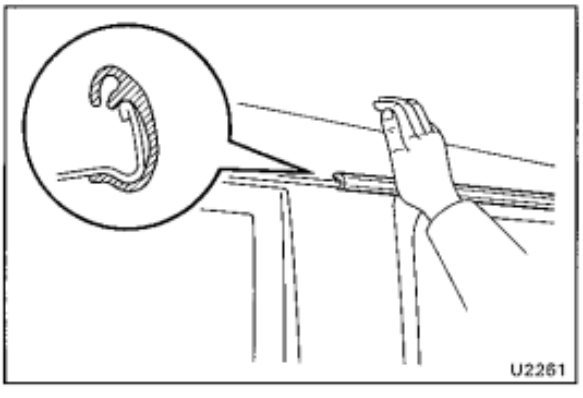

INSTALLATION OF BODY OUTSIDE MOULDING

INSTALL MOULDING AND JOINT COVER

(a) Suspend the upper side of the moulding to the roof drip and tip it on by hand.

(b) Install the joint cover.

Back Door Moulding

COMPONENTS

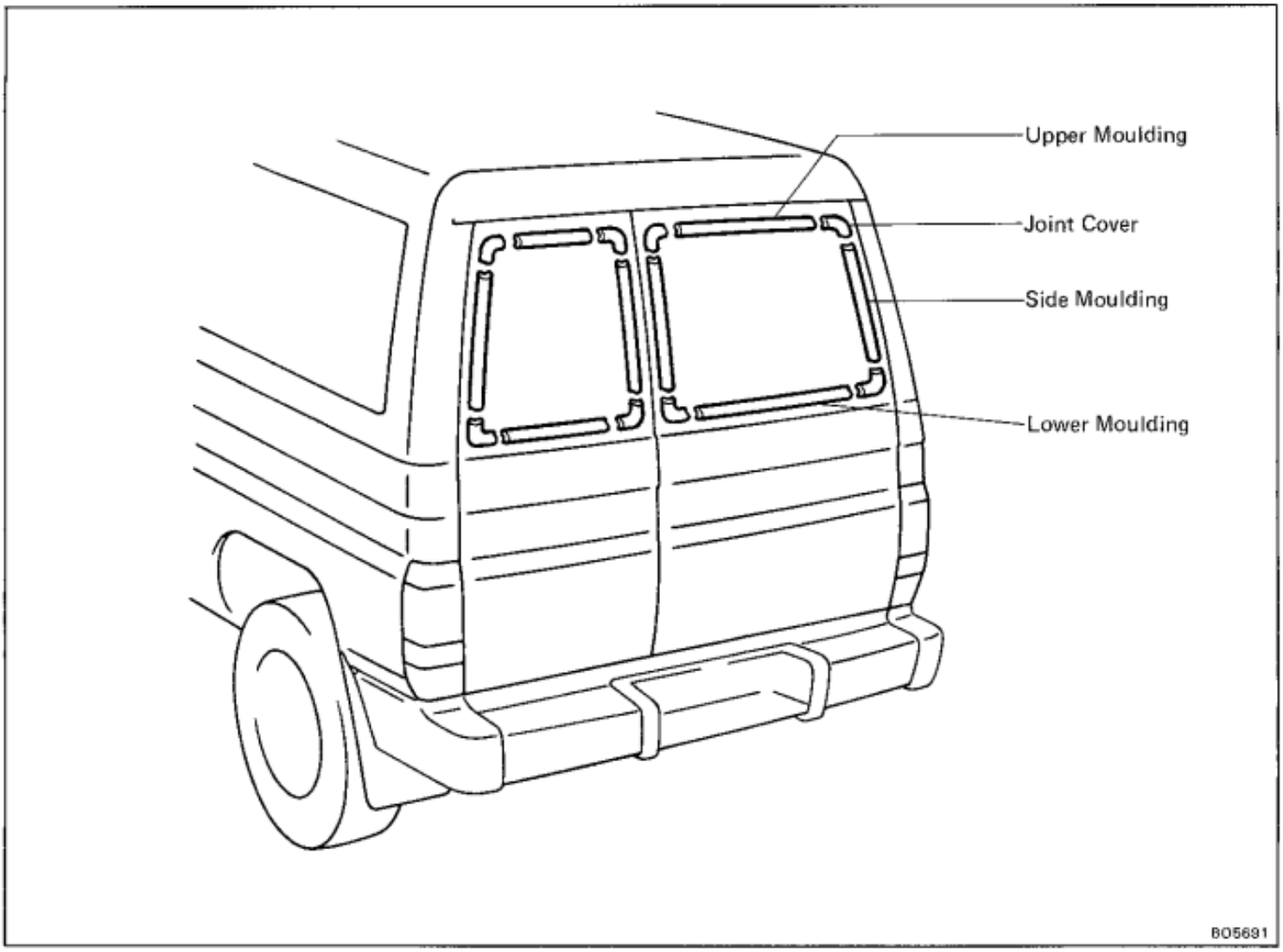

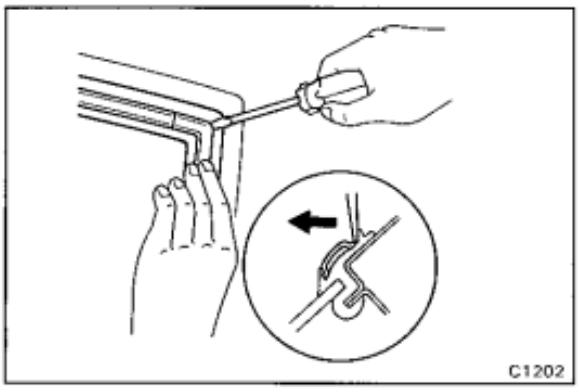

REMOVAL OF BACK DOOR MOULDING

REMOVE JOINT COVER AND MOULDING

(a) Insert a screwdriver between the weatherstrip and joint cover to pry it out.

HINT: Tape the screwdriver tip before use.

(b) Remove the moulding from the end with a screwdriver or similar tool.

(c) Pull the windshield moulding with your hand.

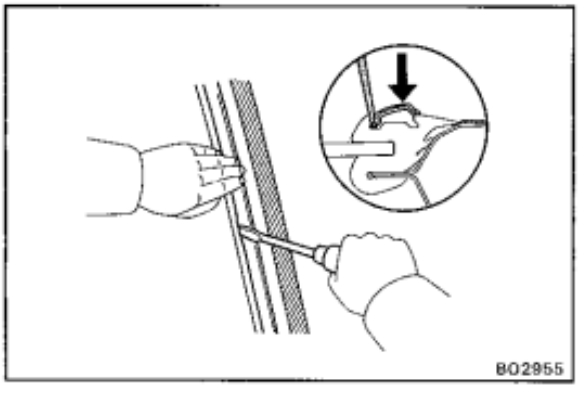

INSTALLATION OF WINDSHIELD MOULDING

INSTALL MOULDING AND JOINT COVER

(a) Apply the soapy water to the weatherstrip and the moulding.

(b) Insert oneside of the moulding rip onto the weatherstrip.

(c) Using a screwdriver, install the moulding and the joint cover.

HINT: Tape the screwdriver tip before use.

Wheel Opening Extension

COMPONENTS

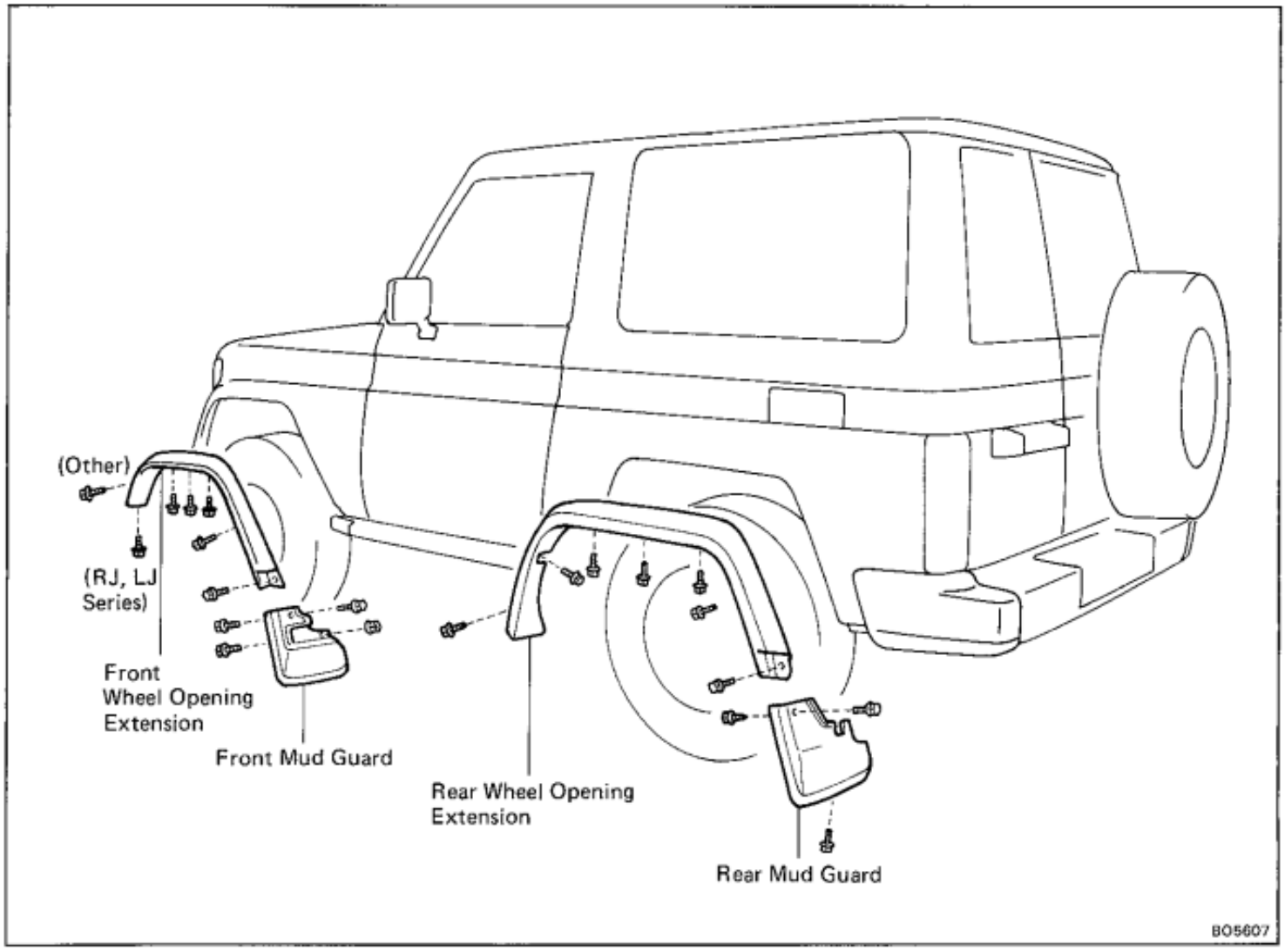

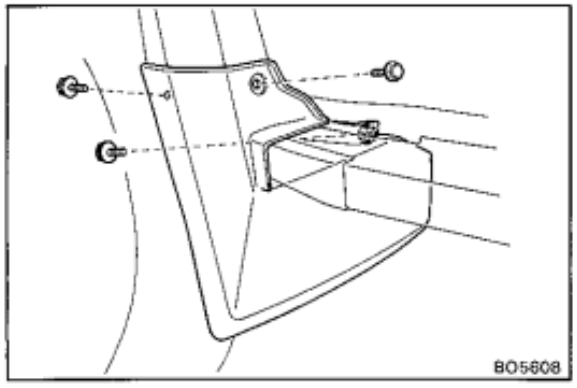

REMOVAL OF FRONT WHEEL OPENING EXTENSION

1. **REMOVE FRONT MUD GUARD**
   Remove three bolts and the mud guard.

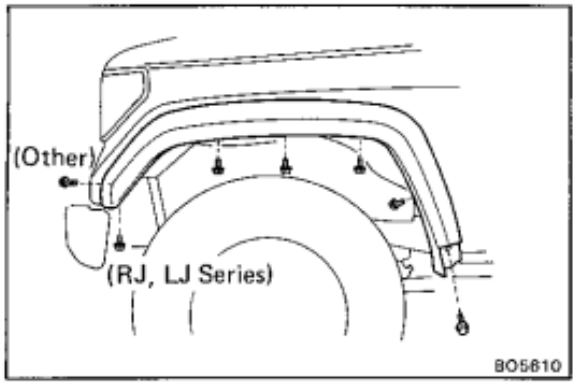

2. **REMOVE FRONT WHEEL OPENING EXTENSION**
   Remove six bolts and the extension.

INSTALLATION OF FRONT WHEEL OPENING EXTENSION

1. **INSTALL FRONT WHEEL OPENING EXTENSION**
   Install the over fender with six bolts.
2. **INSTALL FRONT MUD GUARD**
   Install the mud guard with three bolts.

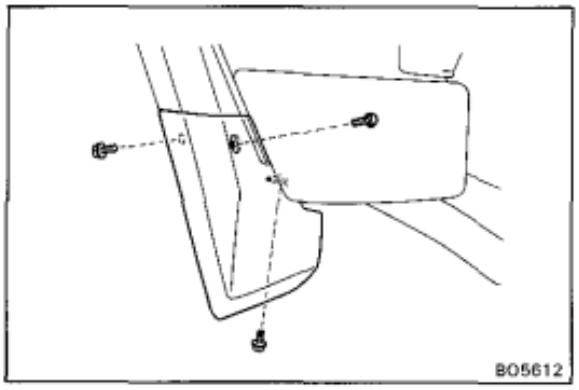

REMOVAL OF REAR WHEEL OPENING EXTENSION

(See page BO-26)

1. **REMOVE REAR MUD GUARD**

   Remove three bolts and the mud guard.

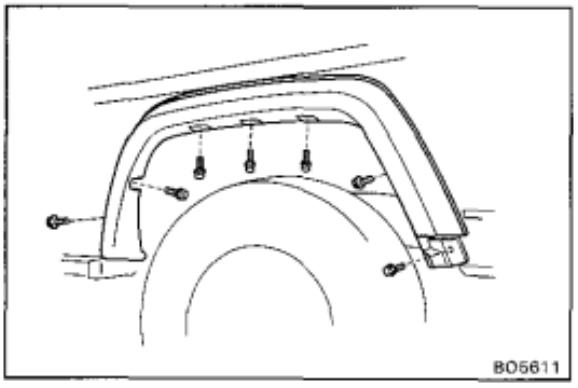

2. **REMOVE REAR WHEEL OPENING EXTENSION**

   Remove seven bolts and the extension.

INSTALATION OF REAR WHEEL OPENING EXTENSION

(See page BO-26)

1. **INSTALL REAR WHEEL OPENING EXTENSION**

   Install the extension with seven bolts.

2. **INSTALL REAR MUD GUARD**

   Install the mud guard with three bolts.

WINDSHIELD

PREPARE ITEMS LISTED

Part name and No.	Contents of set
Auto glass sealer (08833-00030 or equivalent)	
Materials required	Cleaner (for cleaning adhering surfaces)

COMPONENTS

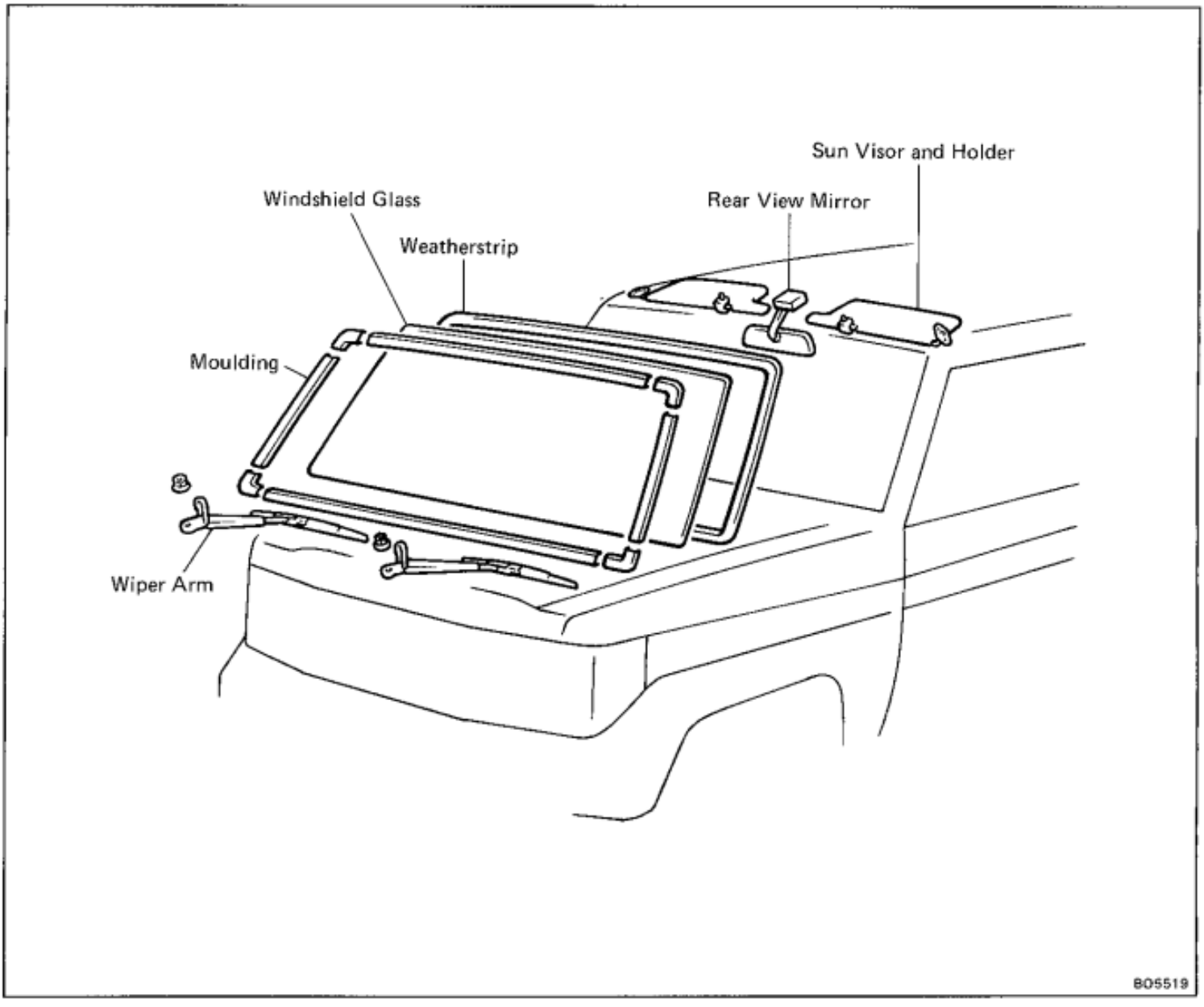

REMOVAL OF WINDSHIELD

1. **REMOVE FOLLOWING PARTS:**
   - Wiper arms
   - Sun visor and holder
   - Inner rear view mirror
2. **(w/ Windshield Moulding)**
   REMOVE WINDSHIELD MOULDING
   (See page BO-23)

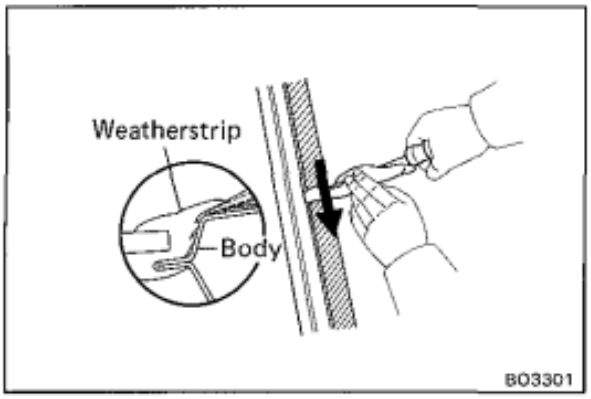

3. REMOVE WINDSHIELD GLASS

If reusing the weatherstrip:

(a) Using a screwdriver, loosen the weatherstrip from the body.

HINT: Tape the screwdriver tip before use.

NOTICE: Be careful not to damage the body.

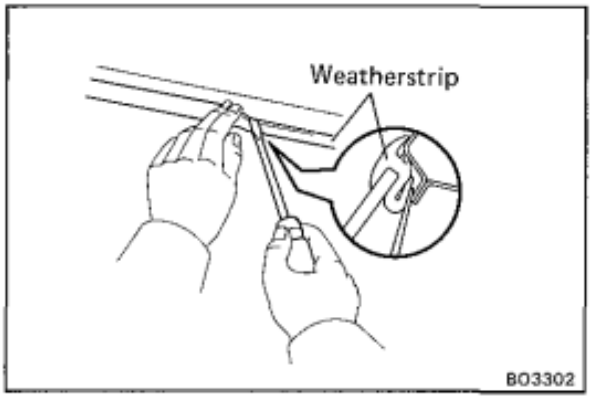

(b) Pry the lip of the weatherstrip outward from the interior part of the body flange.

(c) Pull the glass outward and remove it with the weatherstrip.

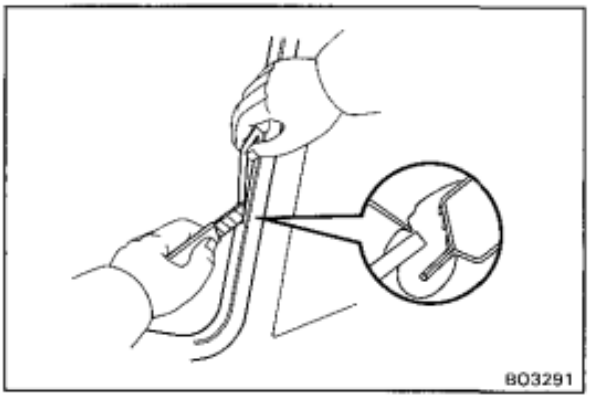

If using a new weatherstrip:

(a) From the outside of the vehicle, cut off the weatherstrip lip with a knife.

NOTICE: Do not damage the body and the glass.

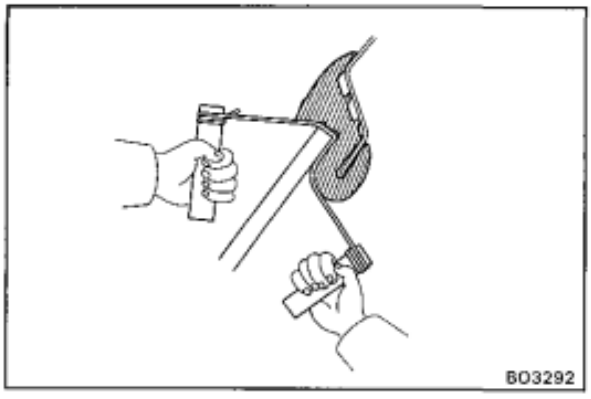

(b) Push piano wire through from the interior.

(c) Tie both wire ends to the wooden blocks or equivalent.

NOTICE: When separating, take care not to damage the paint or interior ornaments.

To prevent scratching the safety pad when removing the windshield, place a plastic sheet between the piano wire and safety pad.

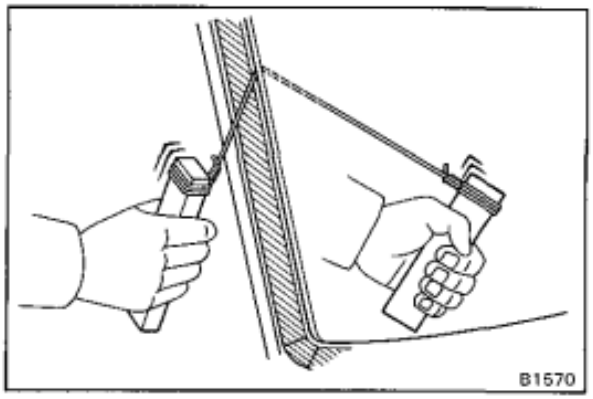

(d) Cut the adhesive by pulling the piano wire around it.

(e) Remove the glass.

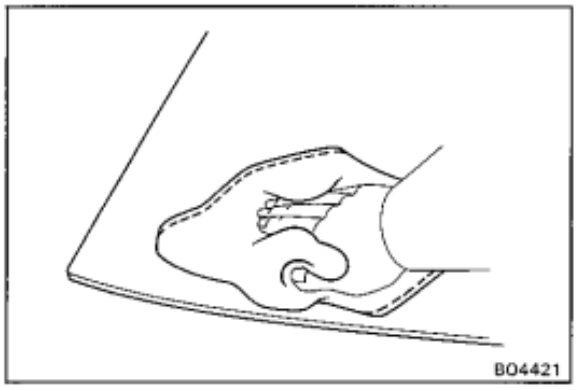

INSTALLATION OF WINDSHIELD

(See page BO-28)

1. CLEAN BODY AND GLASS

Using cleaner, clean the weatherstrip contacting surface of the body and the glass.

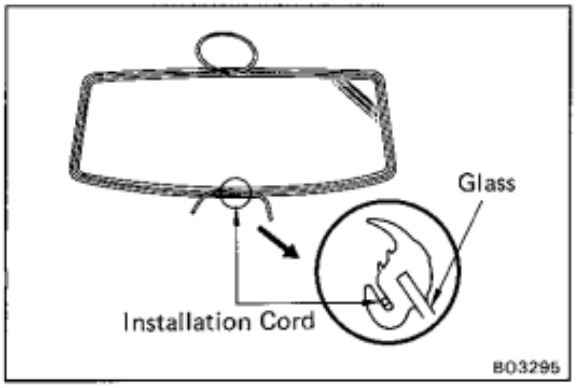

2. INSTALL WEATHERSTRIP ON GLASS

(a) Attach the weatherstrip to the glass.

NOTICE: If the weatherstrip has hardened, it way develop water leaks. Use a new one if possible.

(b) Apply a working cord along the weatherstrip groove as shown.

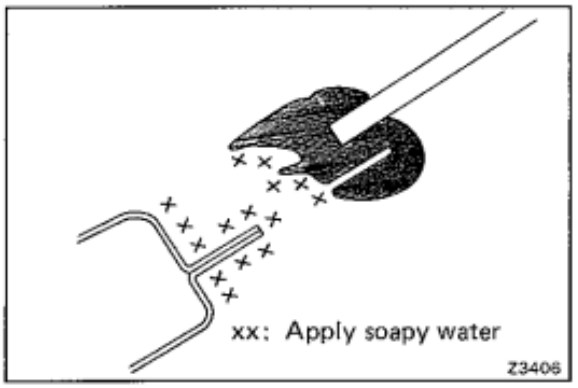

3. INSTALL GLASS

(a) Apply soapy water to the contact surface of the weatherstrip lip and to the body flange.

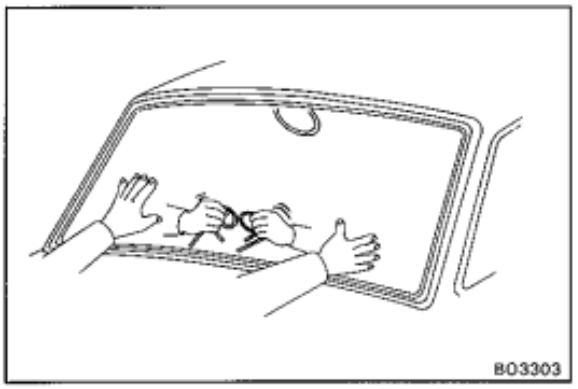

HINT: Begin installation in the middle of the lower part of the glass.

(b) Hold the glass in position on the body.

(c) From the inside, pull on one cord at an angle so that it will pass over the flange. From the outside, tap the glass along the weatherstrip with open hands until the glass is installed.

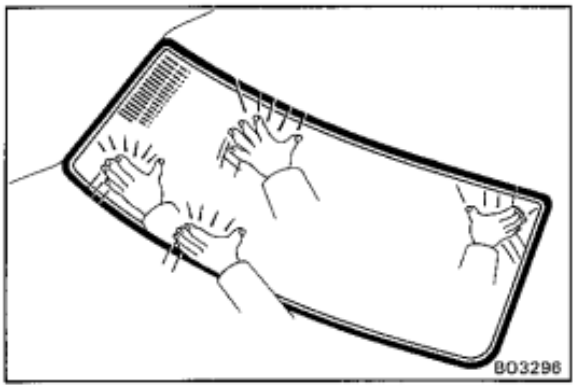

4. SNUG DOWN GLASS

To snug down the glass, tap from the outside with your open hand.

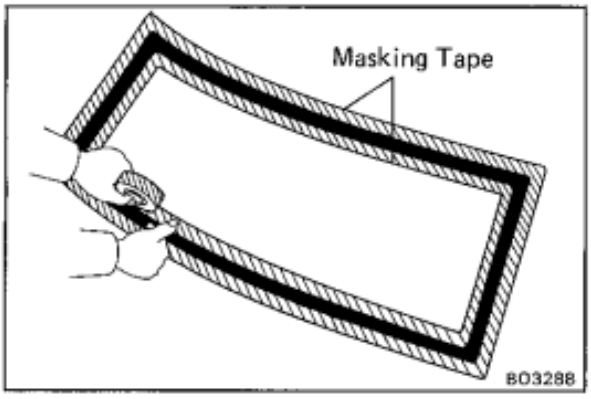

5. APPLY SEALER

(a) Put masking tape around the weatherstrip to protect the paint and glass.

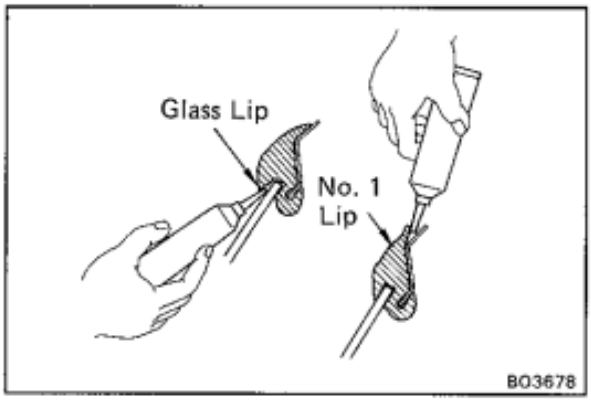

(b) Apply auto glass sealer to the weatherstrip lip as shown.
Part. No. 08833-00030 or equivalent

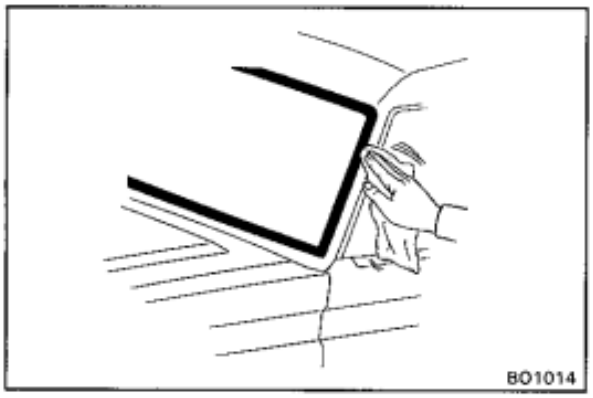

6. CLEANING SEALER SURFACE

(a) After auto glass sealer dry, remove the masking tape.

HINT: The sealer will harden in about 15 hours.

(b) Clean off the sealer oozing out from the masking tape with a clean rag saturated in cleaner.

7. INSPECT FOR LEAKS AND REPAIR

(a) Perform a leak test.

(b) Seal any leaks with auto glass sealer.

Part No. 08833-00030 or equivalent

8. (w/ Windshield Moulding)
INSTALL WINDSHIELD MOULDING

(See page BO-23)

9. INSTALL FOLLOWING PARTS:

- Wiper arms
- Sun visor and holder
- Inner rear view mirror

QUARTER WINDOW GLASS

PREPARE ITEMS LISTED

Part Name and No.	Contents of Set
Auto glass sealer (08833-00030)	
Butyl tape set (08850-00065)	Butyl tape 9 mm dia. × 2,500 mm (0.35 × 98.43 in.) Primer 5 cc (0.17 fl.oz.) Sponge (for applying primer) Piano wire 1 mm dia. × 600 mm (0.04 × 23.62 in.) (for slicing off glass)
Materials required	Cleaner (for cleaning adhering surfaces)

COMPONENTS

70 Series — Hard Top

[Fixed Type]

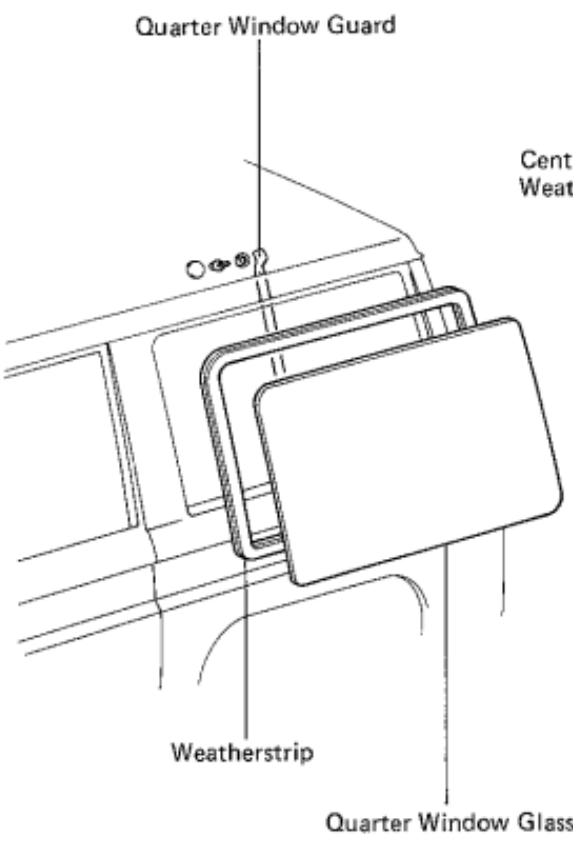

[Slide Type]

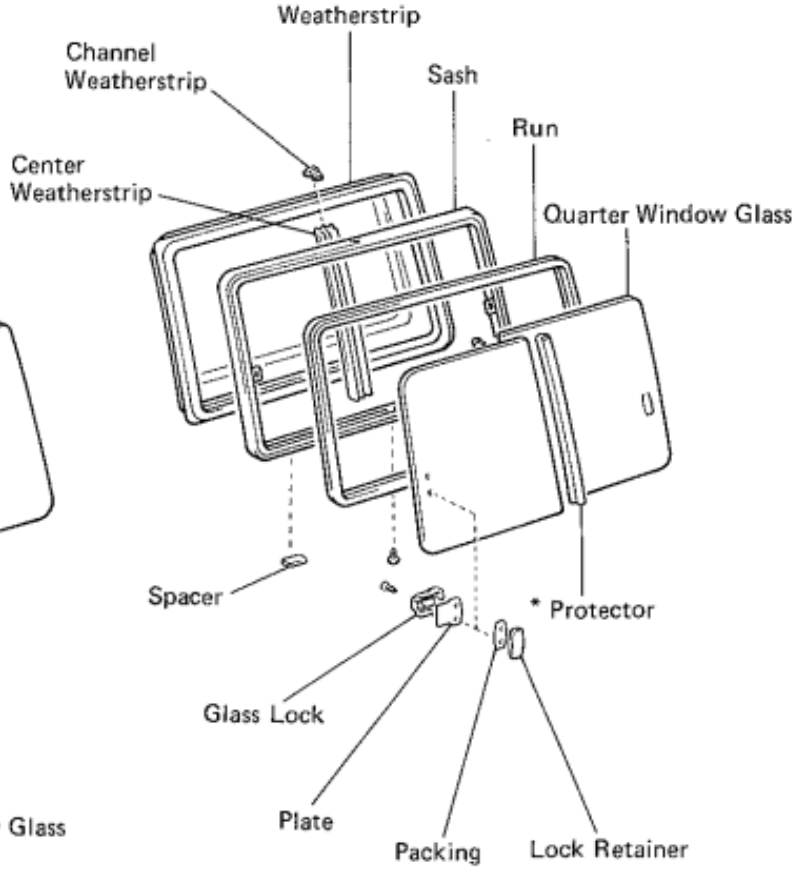

* West Germany only

BO5702

COMPONENTS (Cont'd)

73 Series — FRP Top

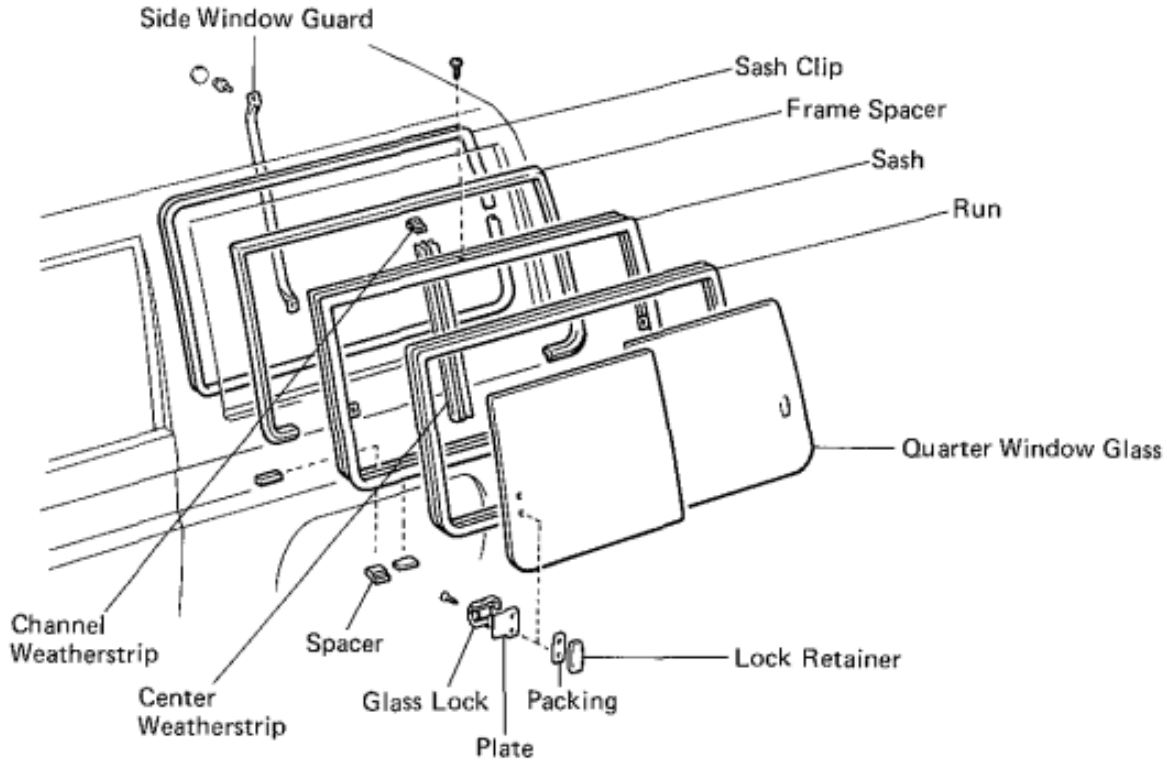

75 Series — Hard Top

[Fixed Type]

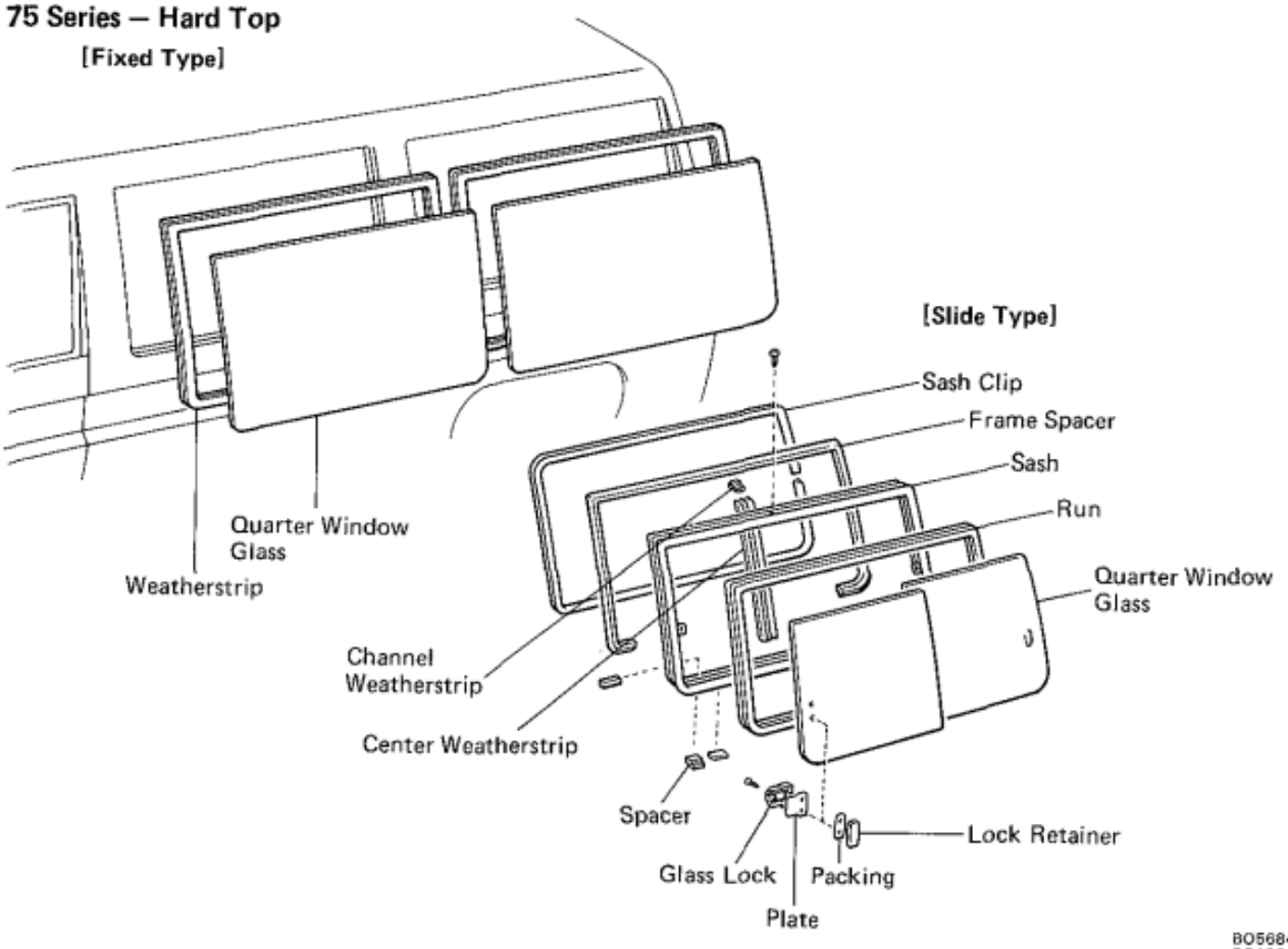

BO5684
BO1021

REMOVAL OF QUARTER WINDOW GLASS

(See pages BO-32 and 33)

Fixed Type

Remove the glass in the same manner as the windshield. (See step 3 on page BO-29)

Slide Type

(70 Series)

1. REMOVE QUARTER WINDOW GUARD

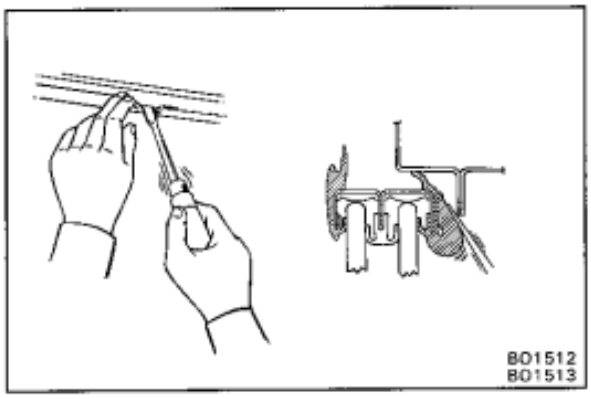

2. REMOVE QUARTER WINDOW GLASS

If reusing the weatherstrip:

(a) Using a screwdriver, push out the lip of the frame or weatherstrip from the room side.

HINT: Tape the screwdriver tip before use.

(b) Push on the glass with your hands from the room side to remove it.

If using a new weatherstrip:

(a) From the outside of the vehicle, cut off the weatherstrip lip with a knife.

(b) Pull the glass outwards and remove it.

(c) Remove the weatherstrip.

NOTICE: Do not damage the body and the glass.

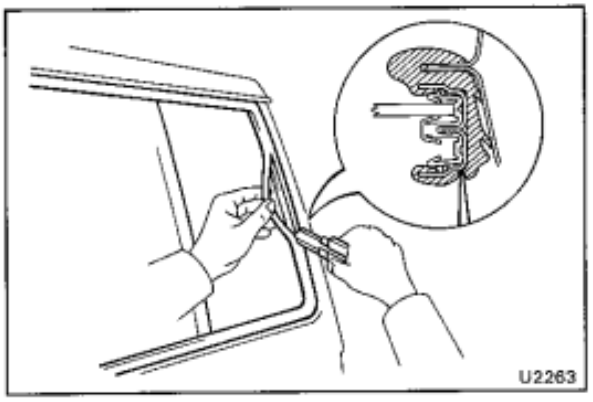

(73 and 75 Series)

1. REMOVE QUARTER WINDOW GUARD (73 Series)

2. REMOVE SASH CLIP

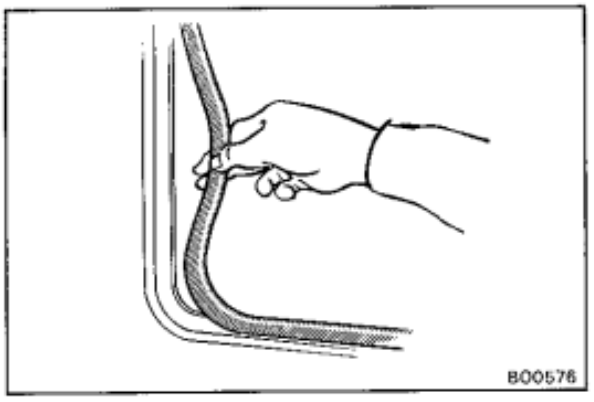

3. REMOVE QUARTER WINDOW GLASS

(a) Using a scraper, cut loose the adhesive between the glass and the body panel.

NOTICE: Do not damage the body and the glass.

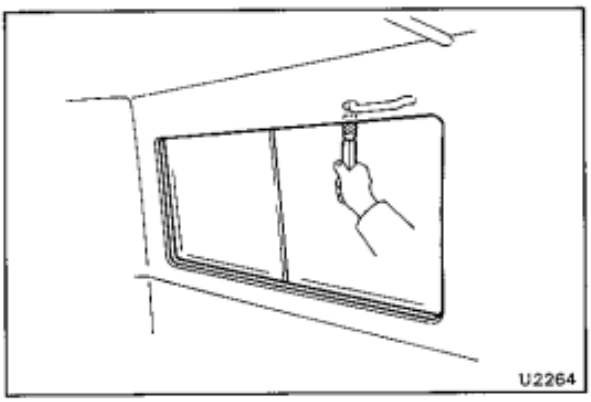

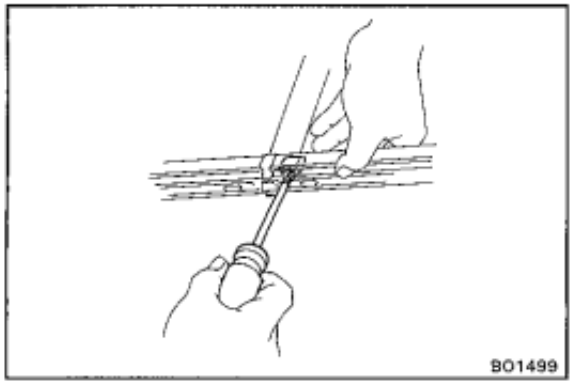

DISASSEMBLY OF QUARTER WINDOW GLASS

Slide Type

(See pages BO-32 and 33)

1. **REMOVE CENTER WEATHERSTRIP AND CHANNEL**

   Remove the screw, the weatherstrip and the channel.

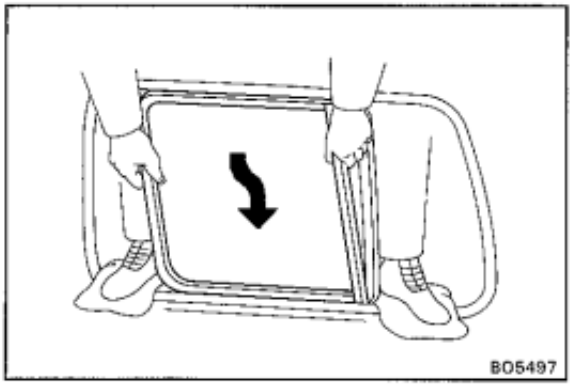

2. **REMOVE QUARTER WINDOW GLASS**

   Pull apart the sash and remove the glass.

3. **REMOVE GLASS LOCK AND LOCK RETAINER**

ASSEMBLY OF QUARTER WINDOW GLASS

Slide Type

(See pages BO-32 and 33)

1. **INSTALL GLASS LOCK AND LOCK RETAINER**
2. **INSTALL QUARTER WINDOW GLASS**
3. **INSTALL CENTER WEATHERSTRIP AND CHANNEL**

INSTALLATION OF QUARTER WINDOW GLASS

(See page BO-32 and 33)

Fixed Type

Install the glass in the same manner as the windshield.
(See step 3 on page BO-30)

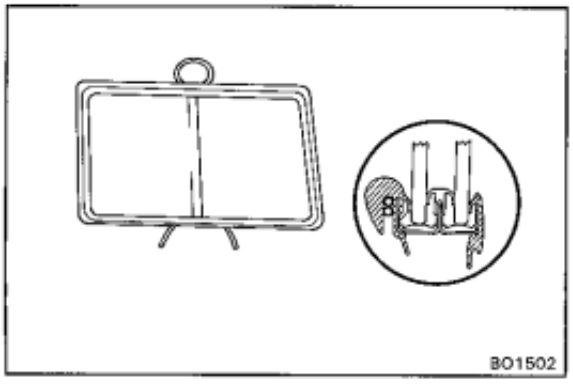

Slide Type

(70 Series)

1. **INSTALL QUARTER WINDOW GLASS**

   (a) Install the working cord to the frame as shown.

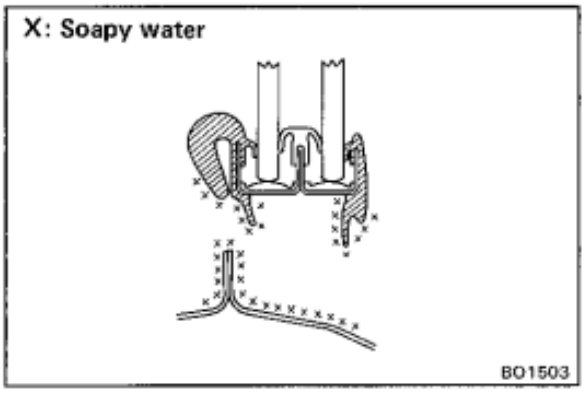

(b) Apply soapy water to the contact surface of the body and the weatherstrip lip.

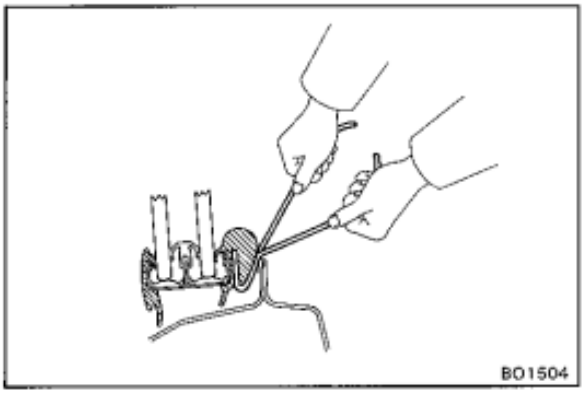

(c) Hold the glass in position on the body.

(d) Install the glass by pulling the cord from the room side, while pushing on the outside of the weatherstrip with your open hand.

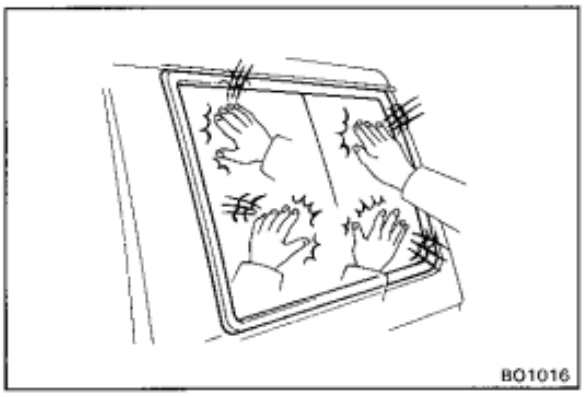

(e) To snug the glass in place, tap from the outside with your open hand.

2. **INSPECT FOR LEAKS AND REPAIR**
(See step 7 on page BO-31)

3. **INSTALL QUARTER WINDOW GUARD (73 Series)**

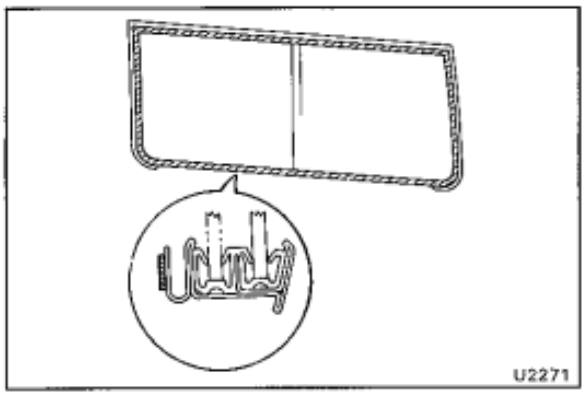

(73 and 75 Series)

1. **CLEAN BODY AND GLASS**

Using cleaner, clean the weatherstrip contacting surface of the body and the glass.

2. **INSTALL QUARTER WINDOW GLASS**

(a) Install the butyl tape to the glass.

(b) Install the glass to the body.

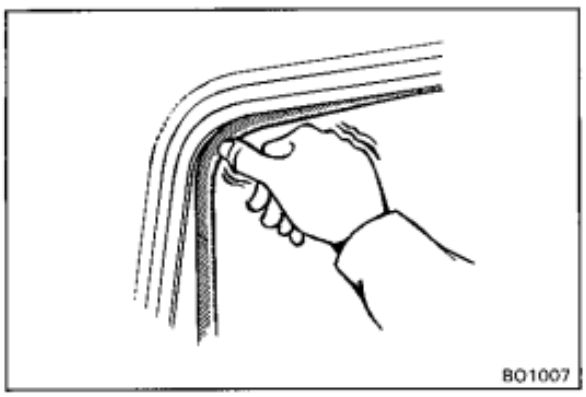

3. **INSTALL SASH CLIP**

4. **INSPECT FOR LEAKS AND REPAIR**
(See step 7 on page BO-31)

5. **INSTALL QUARTER WINDOW GUARD**

BACK DOOR GLASS

PREPARE ITEMS LISTED

(See page BO-28)

COMPONENTS

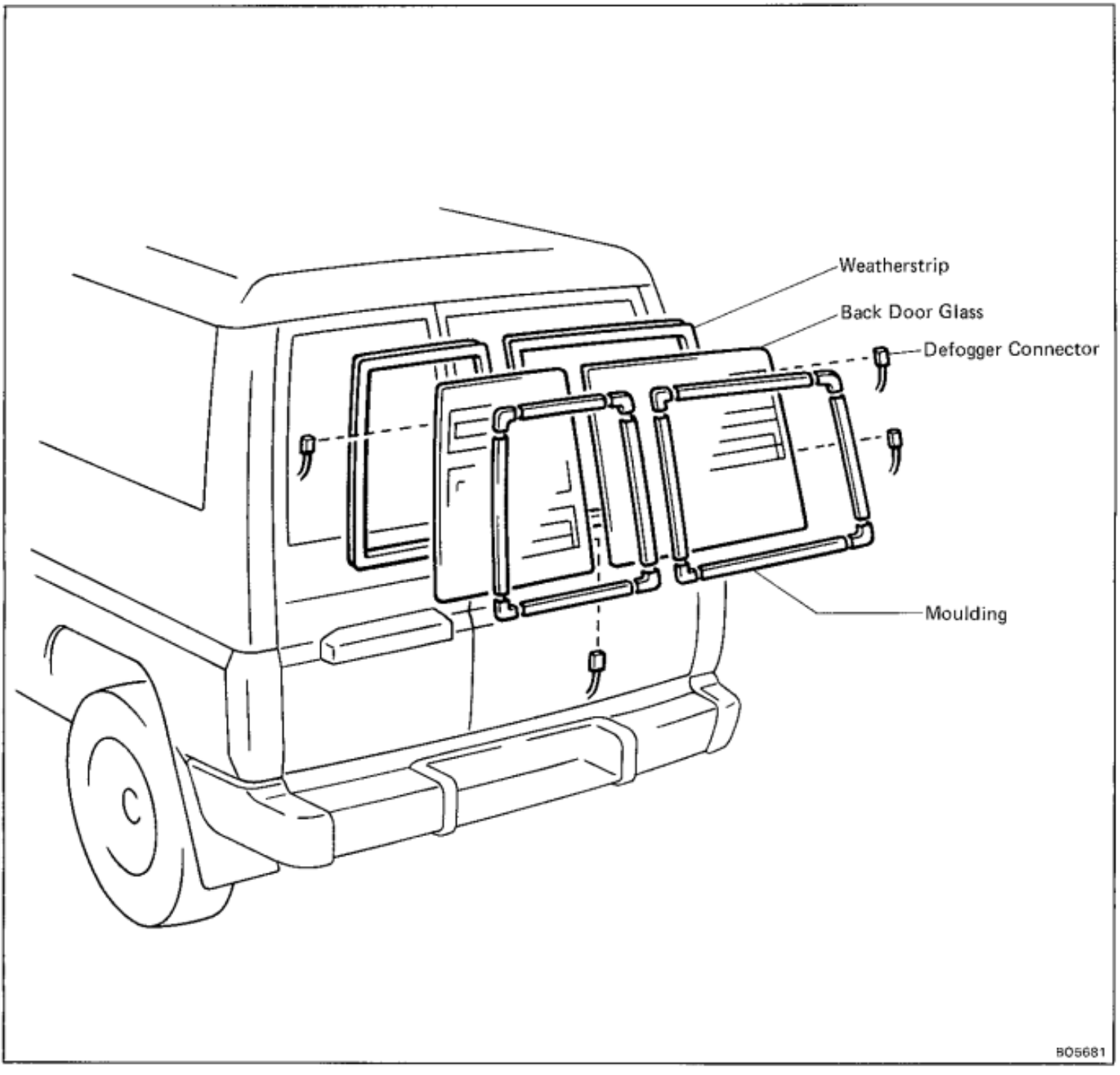

REMOVAL AND INSTALLATION OF BACK DOOR GLASS

Remove and install the back door glass in the same manner as the windshield.
(See pages BO-28 to 31)

BACK WINDOW GLASS

COMPONENTS

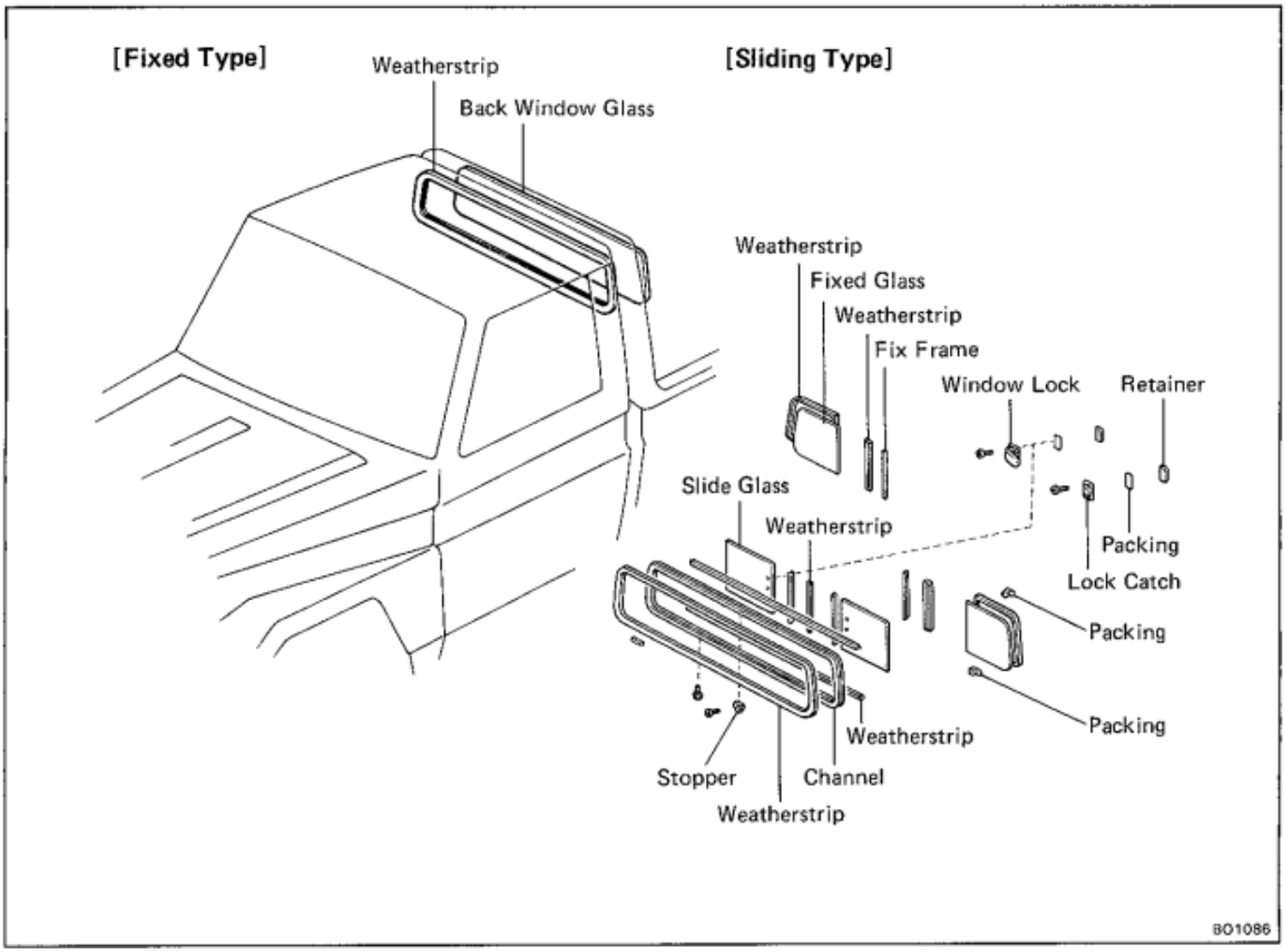

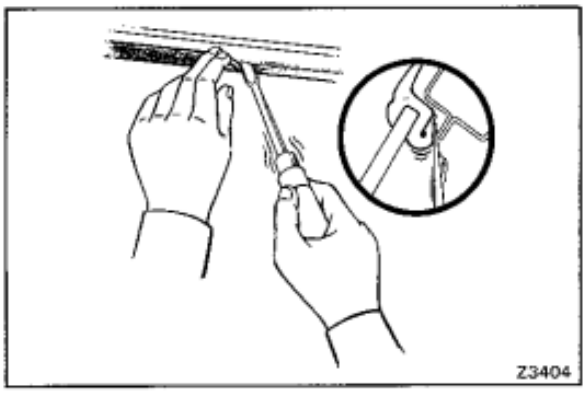

REMOVAL OF BACK WINDOW GLASS

REMOVE BACK WINDOW GLASS

Reusing the weatherstrip:

(a) From inside of vehicle, stuff lip of weatherstrip under flange with screwdriver.

(b) Push the glass out to remove.

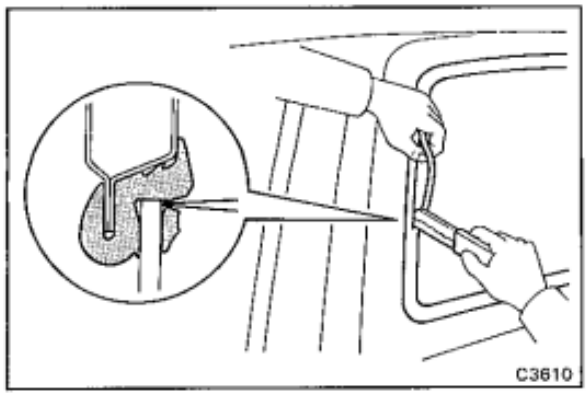

Using a new weatherstrip:

(a) From the outside of the vehicle, cut off the weatherstrip lip with a knife.

(b) Push the back window outwards and remove the back window and weatherstrip.

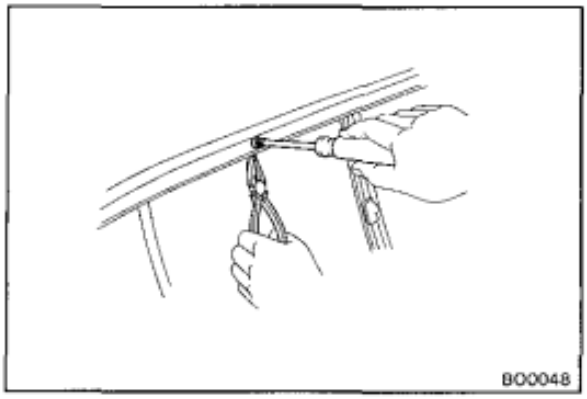

DISASSEMBLY OF BACK WINDOW GLASS (Sliding Type)

(See page BO-38)

1. **REMOVE SLIDE GLASS STOPPER**

   Remove the screw and stopper.

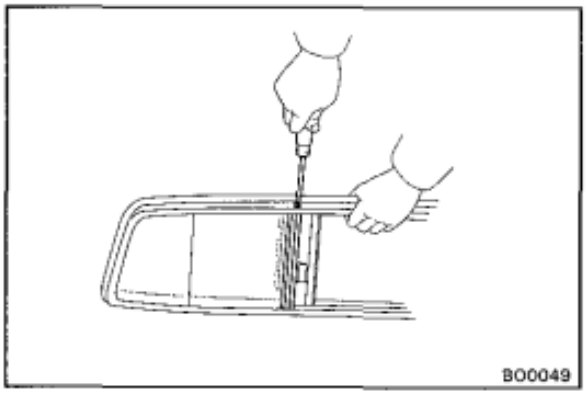

2. **REMOVE FOUR FIX FRAME SCREWS**

   Remove the four screws holding the two fix frames.

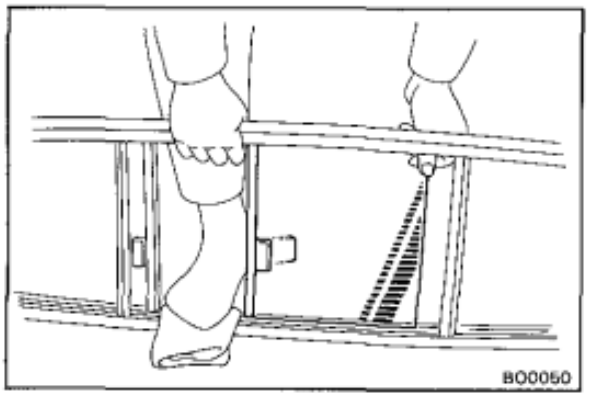

3. **REMOVE SLIDE GLASS**

   Pull apart the channels and remove the two slide glass panes at the center of the glass channel.

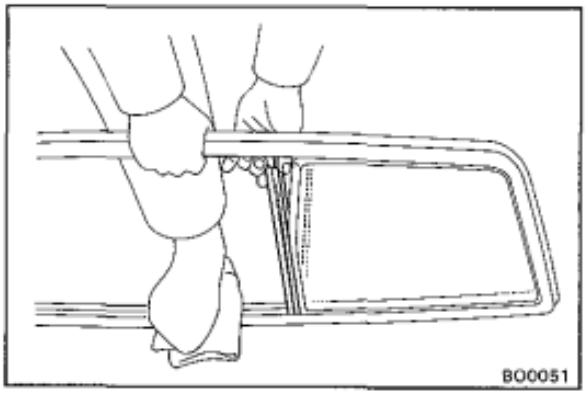

4. **REMOVE FIX FRAME**

   (a) Remove the four packings.

   (b) Pull apart the channels and remove the two fix frames as shown.

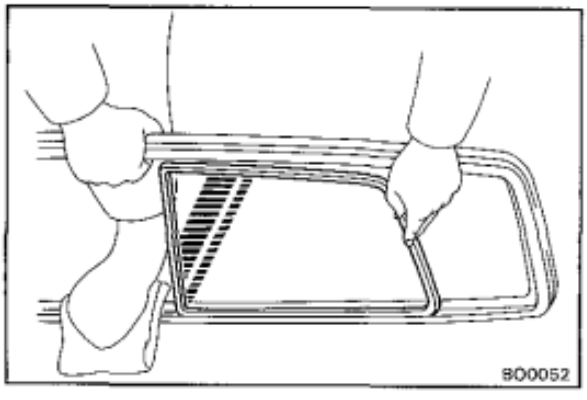

5. **REMOVE FIXED GLASS**

   Pull apart the channels and remove the two fixed glass panes with the weatherstrip as shown.

6. **REMOVE WEATHERSTRIP**

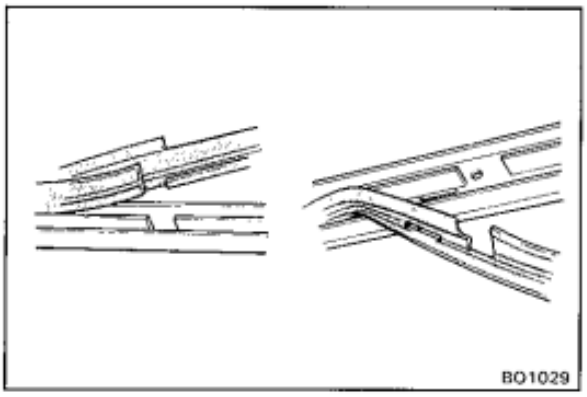

ASSEMBLY OF BACK WINDOW GLASS
(Sliding Type)

(See page BO-38)

1. INSTALL WEATHERSTRIP

Align the grooves on the channel and weatherstrip and install.

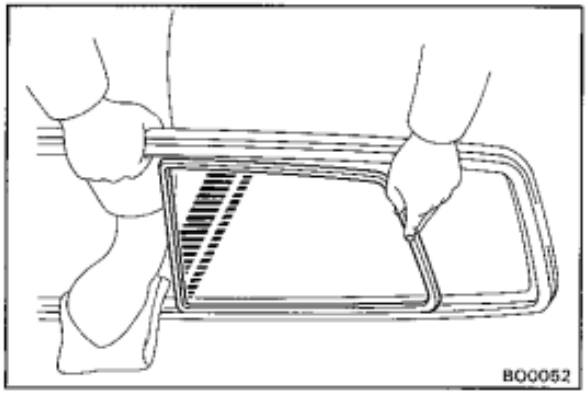

2. INSTALL FIXED GLASS

(a) Apply soapy water to the contact face of the weatherstrip and to the glass channel flange.

(b) Pull apart the channels and install the two fixed glass panes with the weatherstrip.

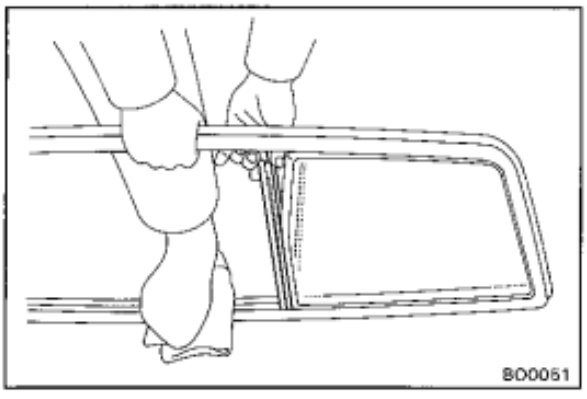

3. INSTALL FIX FRAMES

(a) Apply soapy water to the contact face of the weatherstrip and to the fix frames.

(b) Pull apart the channels and install the two fixed frames as shown.

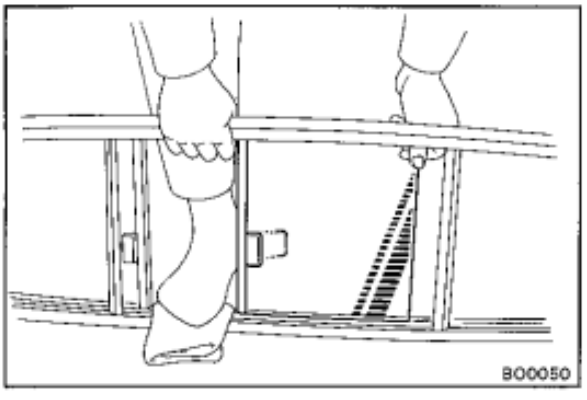

4. INSTALL SLIDE GLASS

Pull apart the channels and install the slide glass in the center of the glass channel.

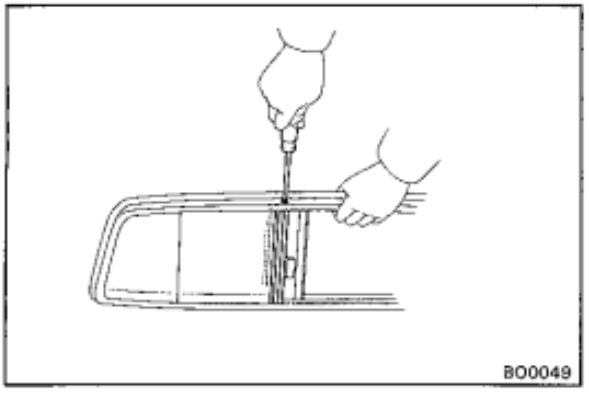

5. INSTALL FOUR FIX FRAME SCREWS AND FOUR PACKINGS

(a) Install the four screws holding the two fix frames.

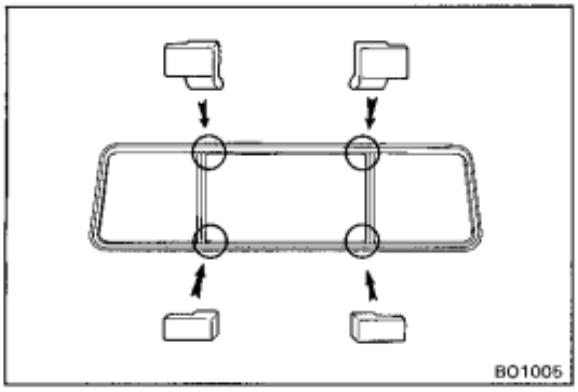

(b) Install packing (four pieces).

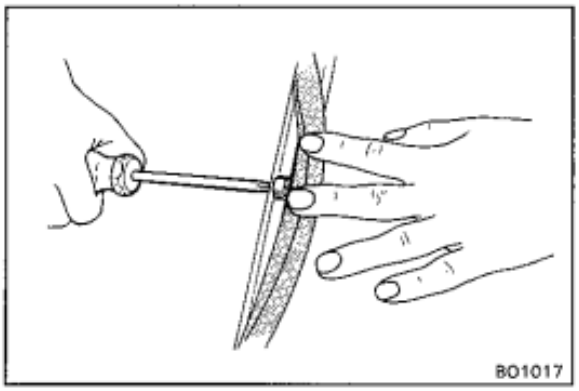

6. INSTALL SLIDING GLASS STOPPER

Install the sliding glass stopper with the screw.

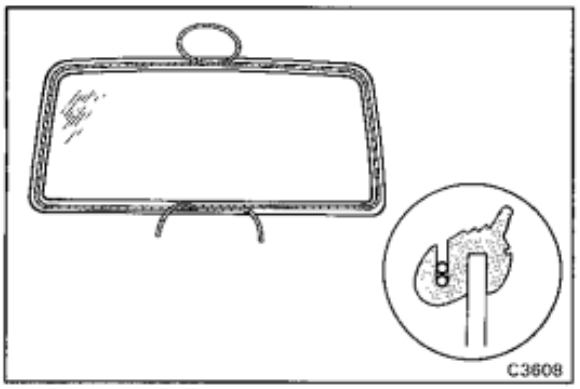

INSTALLATION OF BACK WINDOW GLASS

(See page BO-38)

1. INSTALL WEATHERSTRIP ON BACK WINDOW GLASS

(a) Attach the weatherstrip to the back window glass.

NOTICE: If the weatherstrip has become hard, it may develop leaks. Use a new one if possible.

(b) Insert a cord into the groove of the weatherstrip all the way around with the ends overlapping.

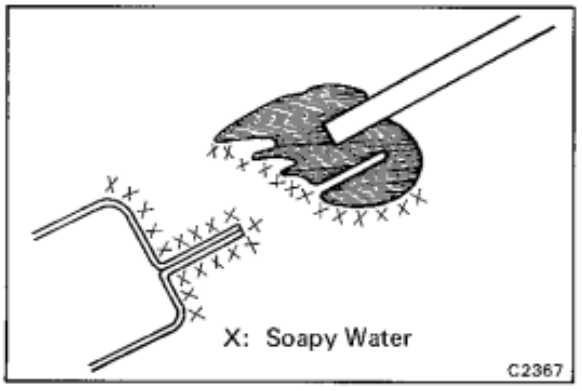

2. INSTALL BACK WINDOW GLASS

(a) Apply soapy water to the contact surface of the weatherstrip lip and to the body flange.

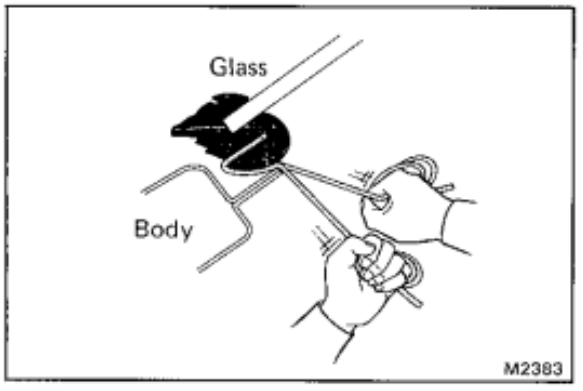

HINT: Begin installation in the middle of the lower part of the glass.

(b) Hold the back window in position on the body.

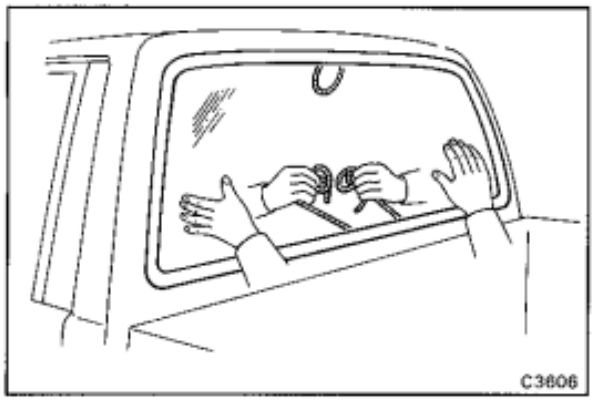

(c) From the inside, pull on one cord at an angle so it pulls the lip over the flange. From the outside, press the glass along the weatherstrip until the glass is installed.

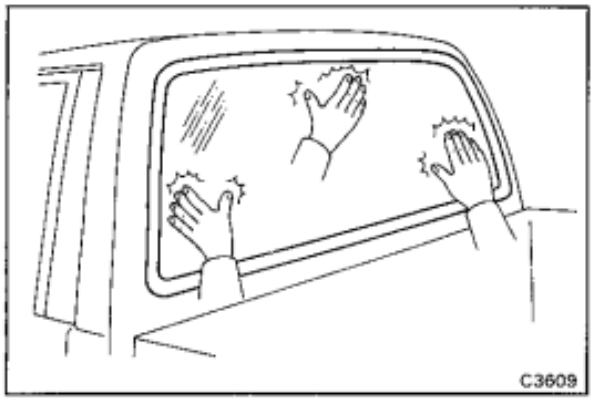

(d) Tap on the outside of the glass until it is securely in place.

3. **INSPECT FOR LEAK AND REPAIR**
(See step 7 on page BO-31)

MOON ROOF

COMPONENTS

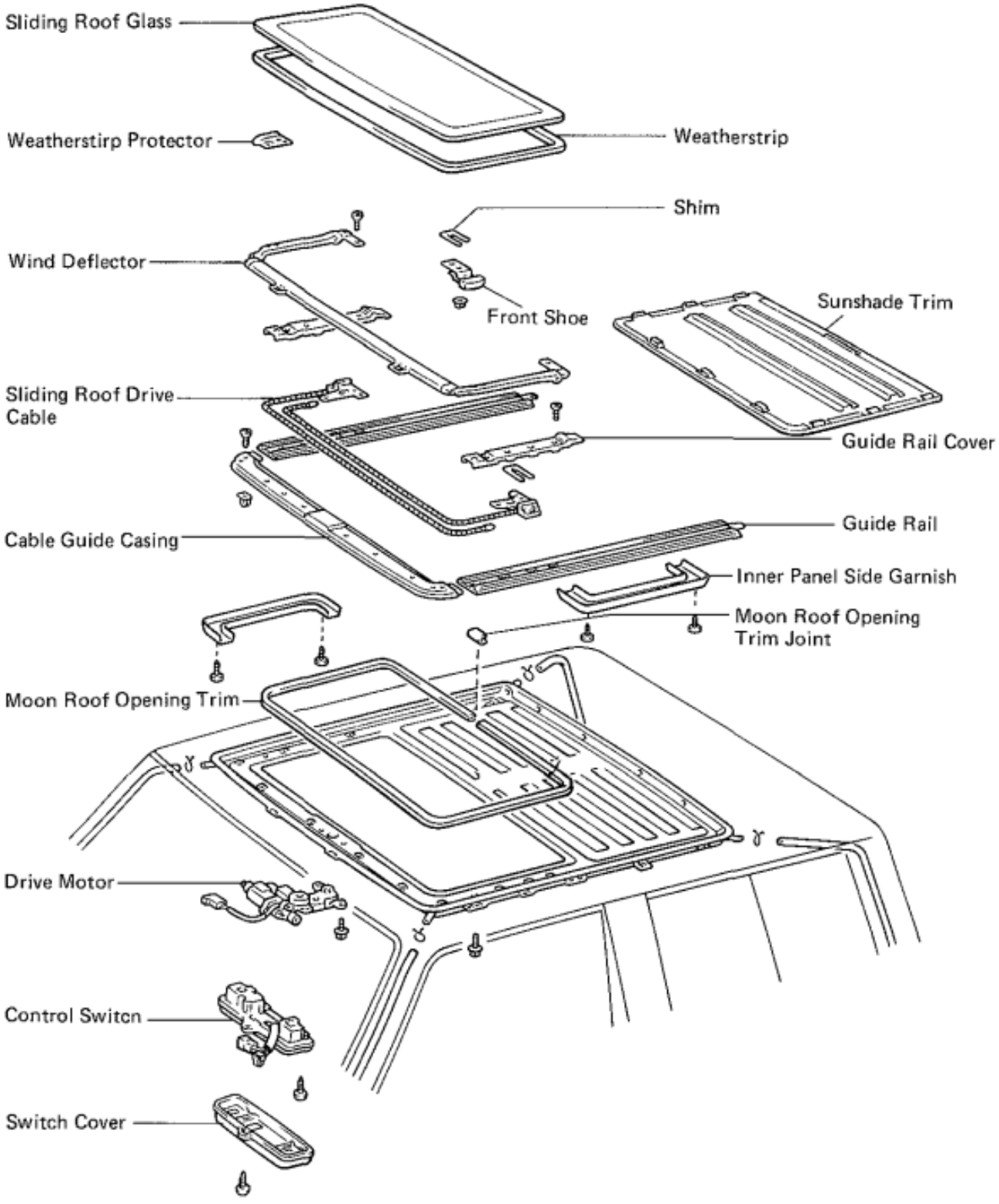

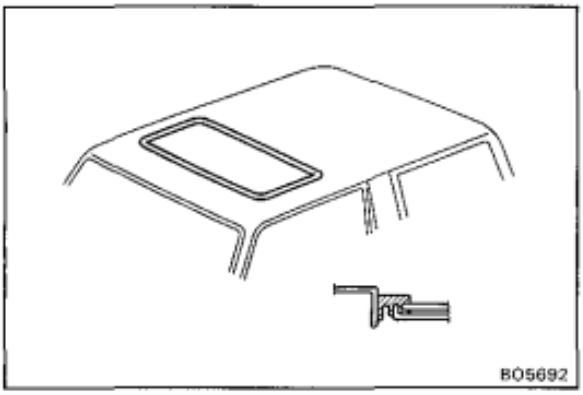

ON-VEHICLE INSPECTION

(a) Start the engine and check the operation time of the moon roof.

Operation time: Approx. 10 secs.

(b) Check for abnormal noise or binding during operation.

(c) With the moon roof fully closed, check for water leakage.

(d) Check for a difference in level between the sliding glass and roof panel.

Front side: $0^{+1.0}_{-2.0}$ **mm** ($0^{+0.039}_{-0.079}$ **in.**)

Rear side: $0^{+1.0}_{-2.0}$ **mm** ($0^{+0.039}_{-0.079}$ **in.**)

Left and right side: $0^{+1.0}_{-2.0}$ **mm** ($0^{+0.039}_{-0.079}$ **in.**)

If the sliding roof does not operate:

(a) Remove the grommet in front of the control switch.

(b) Remove the screw inside.

NOTICE: Be careful not to lose the spring washer or washer.

(c) Manually operate the moon roof by inserting a screwdriver into the hole and turning the drive shaft.

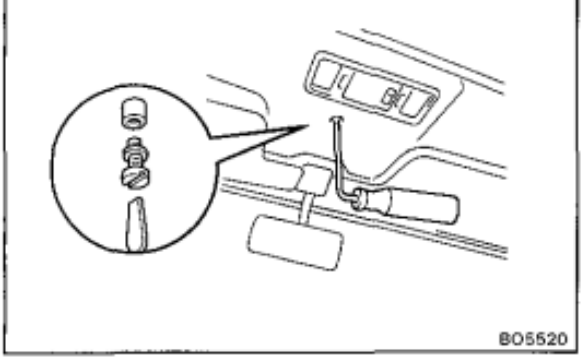

ADJUSTMENT OF SLIDING ROOF

1. REMOVE SLIDING ROOF GARNISHES

Before making adjustments, remove the left and right sliding roof garnishes.

HINT: After adjustment, reinstall the sliding roof garnishes.

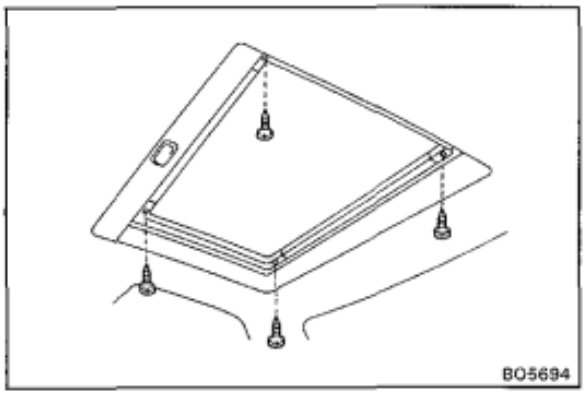

2. TO ADJUST LEVEL DIFFERENCE

Adjust by increasing or decreasing the number of shims.

HINT: If the front end is high, even without a shoe shim, check to see if the front shoes are in contact with the stoppers.

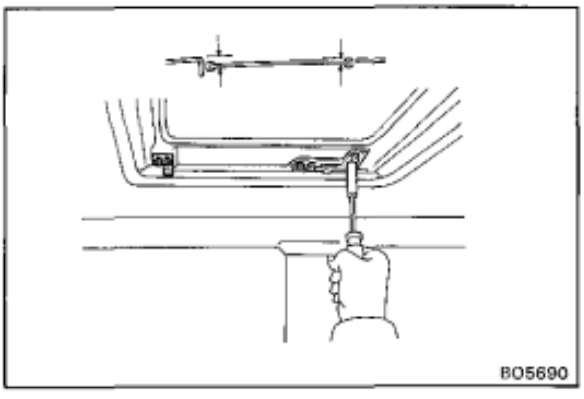

3. TO ADJUST FORWARD OR REARWARD

Adjust by moving the front shoe on both sides.

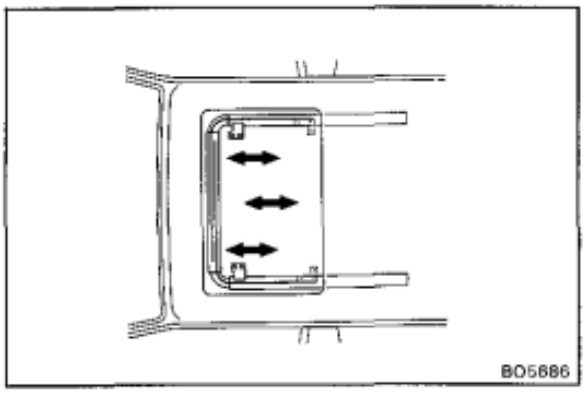

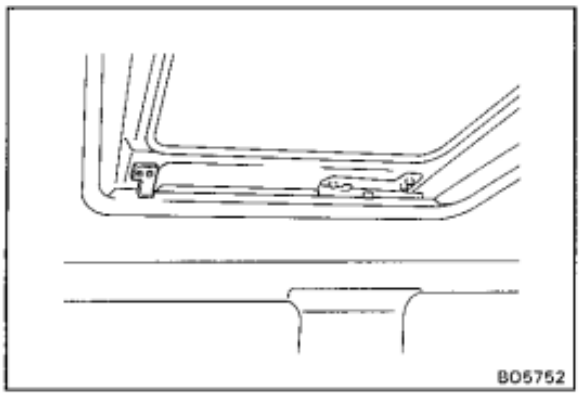

HINT: When the sliding roof is fully closed, confirm that the front shoes are in contact with the stopper.

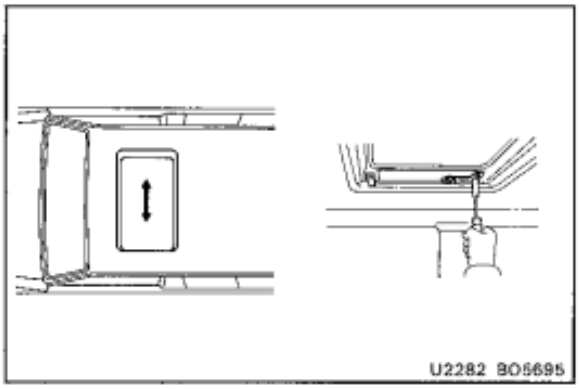

4. TO ADJUST RIGHT OR LEFT

Adjust by loosening the rear shoe nuts and moving the sliding roof to the right and left.

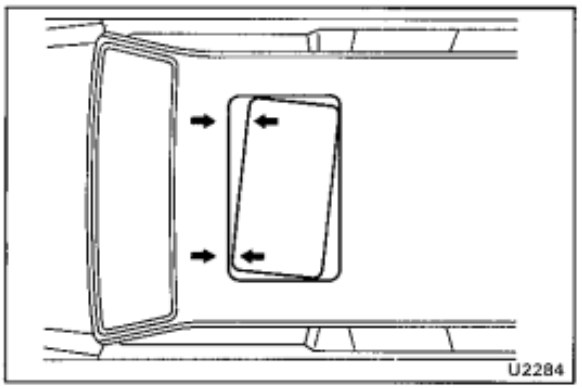

5. TO ADJUST CLEARANCE

(Difference in left and right front clearance)

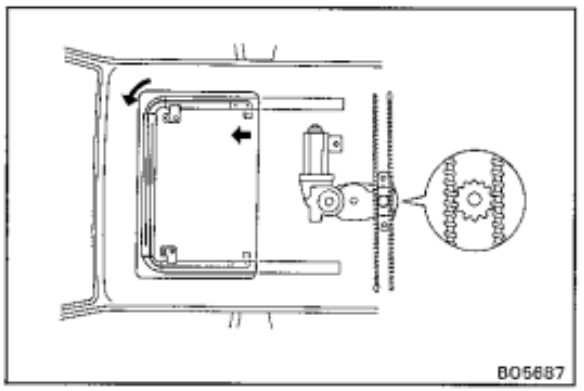

If the difference is about 2 mm (0.08 in.):

(a) Remove the drive motor and shift the cable one notch on the side with the larger clearance.

(b) Reinstall the motor.

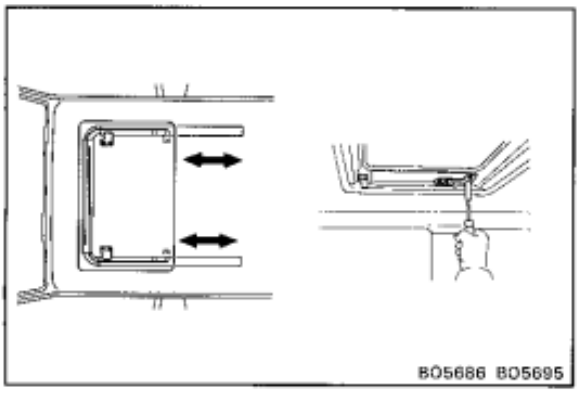

If the difference is about 1 mm (0.04 in.):

Loosen the rear shoe bolts and readjust the sliding roof to the proper position.

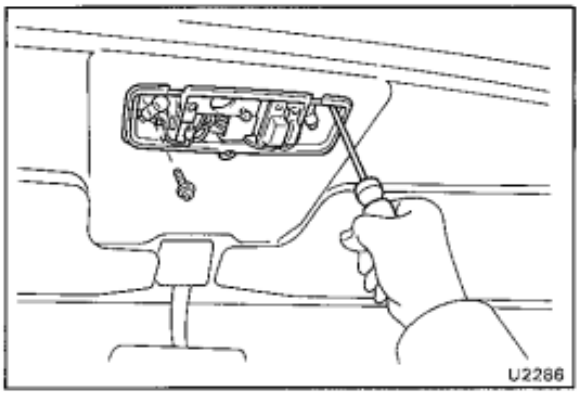

REMOVAL OF MOON ROOF

(See page BO-43)

1. **DISCONNECT BATTERY CABLE FROM NEGATIVE TERMINAL**
2. **REMOVE SWITCH COVER**
3. **REMOVE CONTROL SWITCH**
4. **REMOVE MOON ROOF OPENING TRIM**
5. **REMOVE DRIVE MOTOR**

   Remove the three screws and the drive motor.

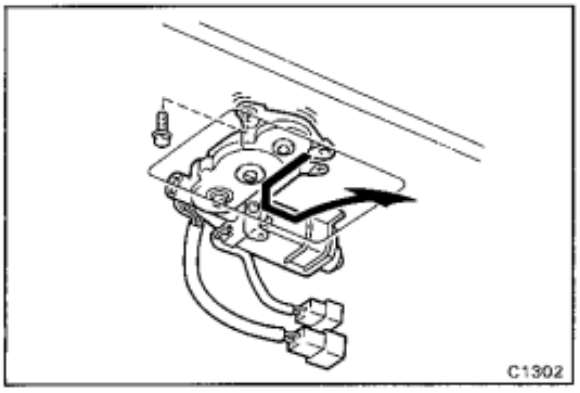

6. **REMOVE WIND DEFLECTOR**

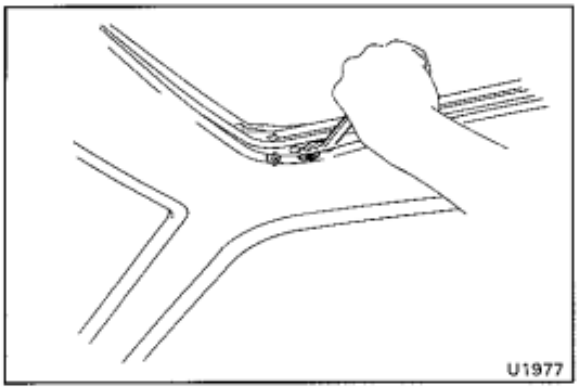

7. **REMOVE GUIDE RAIL COVER**

   Remove the one bolt from the inside and the two screws from the outside, then remove the guide rail cover.

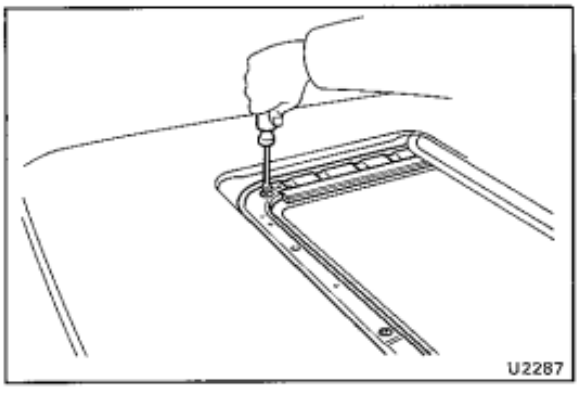

8. **REMOVE SLIDING ROOF AND GUIDE RAIL**
   (a) Apply adhesive tape to protect the body.
   (b) Remove the four set screws of the cable guide casing.

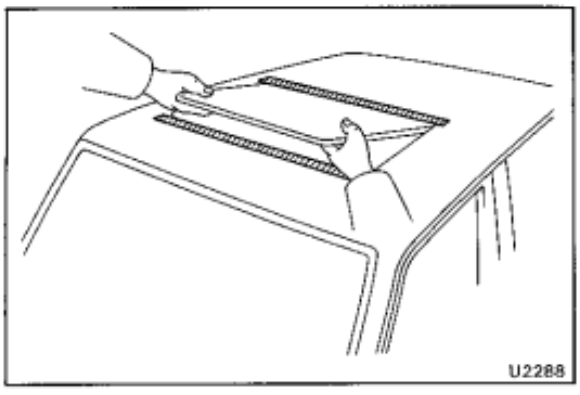

   (c) Pull the sliding roof with the guide rail upward and forward to remove.

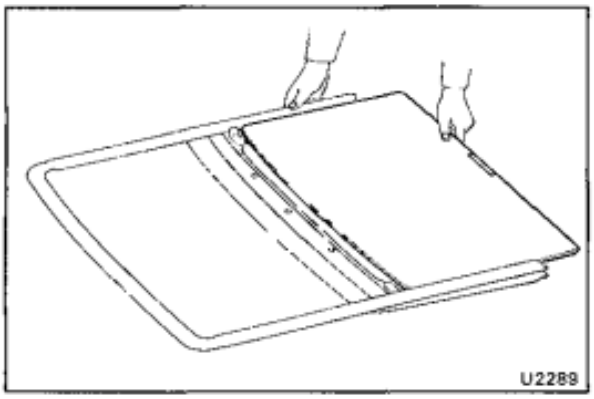

DISASSEMBLY OF MOON ROOF

(See page BO-43)

1. **REMOVE SUNSHADE TRIM**
   (a) Pry off the clip.
   (b) Pull the trim rearward to remove.

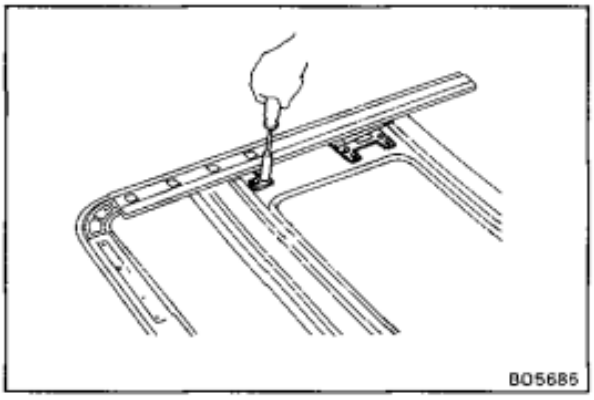

2. **NOTE NUMBER OF SHIMS ON FRONT AND REAR**
3. **REMOVE TWO FRONT SHOE SET NUTS**
4. **REMOVE THREE REAR SHOE SET NUTS**

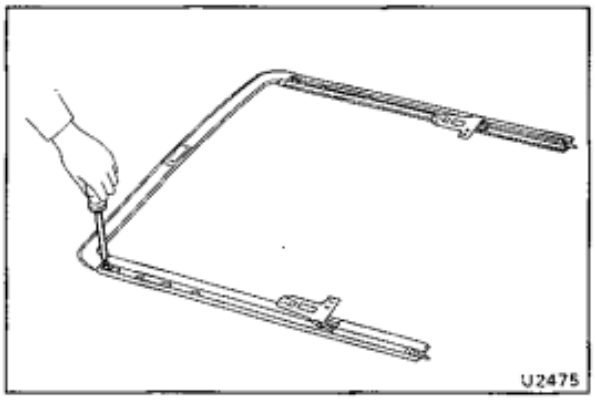

5. **REMOVE GUIDE RAIL**
   (a) Loosen the screw.
   (b) Pull the guide rail rearward to remove.
6. **REMOVE DRIVE CABLES FROM CABLE GUIDE CASING**

ASSEMBLY OF MOON ROOF

(See page BO-43)

1. **APPLY MP GREASE TO DRIVE CABLE**
2. **PLACE DRIVE CABLES INTO GUIDE CASING**
3. **INSTALL GUIDE RAILS ON BOTH SIDES**
   (a) Install both side guide rails through the rear and front shoes.
   (b) Install the guide rail and cable guide casing with screws.
   (c) Use butyl tape to cover the cut portion of the weatherstrip at the connection between the cable guide case and guide rail.

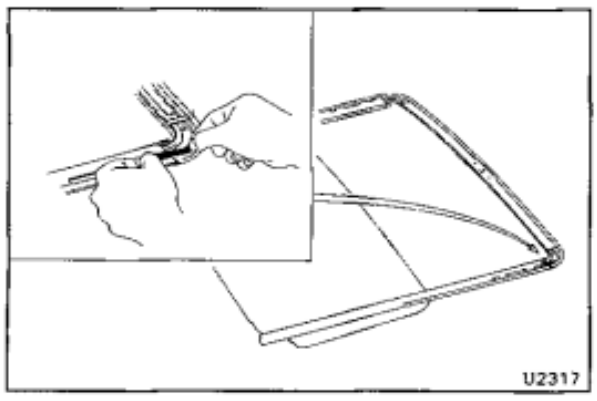

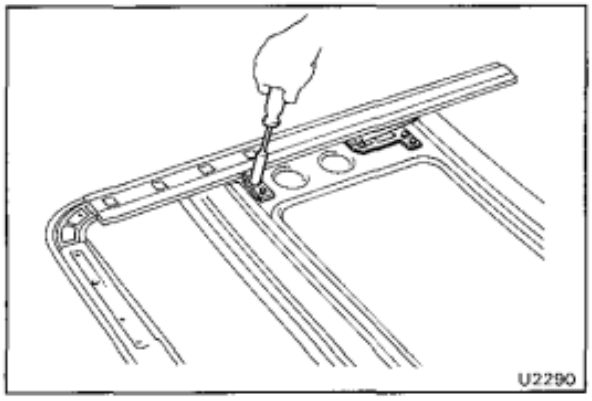

4. INSTALL FRONT AND REAR SHOES ONTO ROOF GLASS

Install the front and rear shoes and shims to their original positions when disassembled.

HINT: Hand tighten the front shoe nuts firmly tighten the rear shoe nuts.

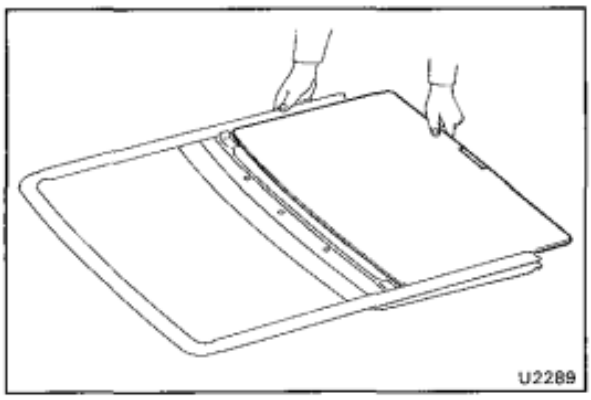

5. INSTALL SUNSHADE TRIM

Install the trim through the guide rail and install the clips to the trim.

INSTALLATION OF MOON ROOF

(See page BO-43)

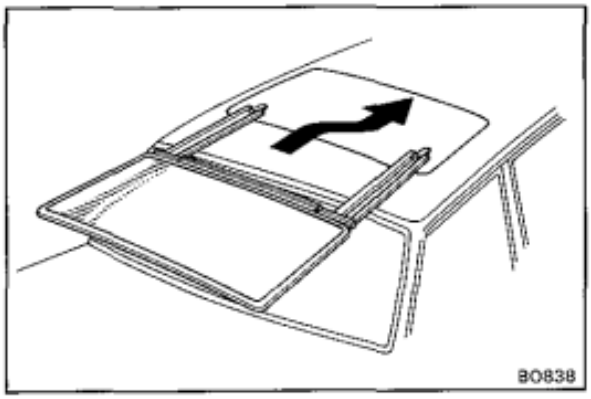

1. INSTALL SLIDING ROOF WITH GUIDE RAIL ONTO ROOF

(a) Install the sliding roof assembly onto the roof.

(b) Tighten the four cable guide casing set screws.

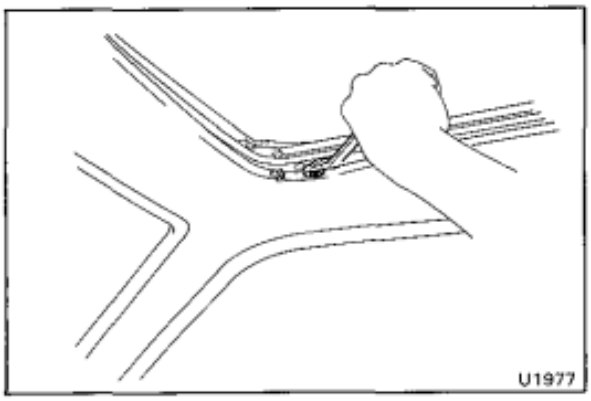

2. INSTALL GUIDE RAIL COVER

Install the side rail cover from the inside with the one bolt and from the outside with the two screws.

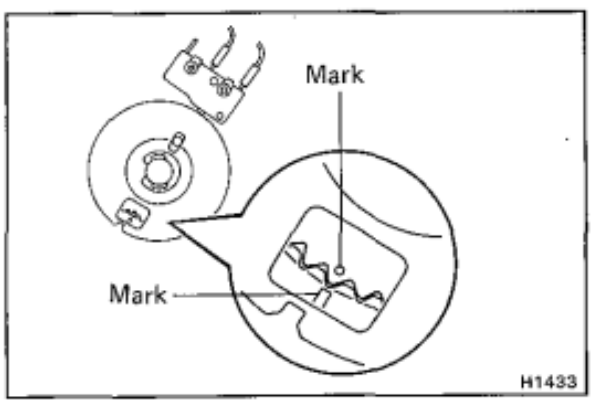

3. INSTALL WIND DEFLECTOR

4. INSTALL DRIVE MOTOR

(a) Fully open the sliding roof.

(b) Peel off tape on motor cam adjusting hole.

(c) Rotate the drive motor cam and align the housing and cam marks.

(d) Adhere tape to motor cam adjusting hole.

(e) Connect the two connectors and install the drive motor with the three bolts.

5. **INSTALL MOON ROOF OPENING TRIM**

6. **ADJUST SLIDING ROOF**
   (See pages BO-44 to 45)

7. **INSTALL CONTROL SWITCH**

8. **INSTALL SWITCH COVER**

9. **CONNECT BATTERY CABLE TO NEGATIVE TERMINAL**

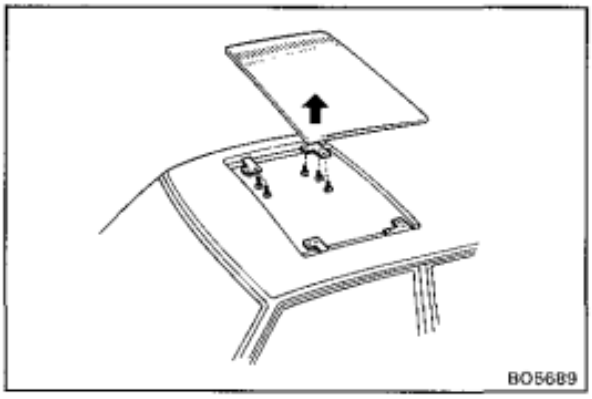

REMOVAL OF SLIDING ROOF GLASS

TO REMOVE SLIDING ROOF GLASS ONLY

(a) Pull loose the clips and slide the sunshade trim rearward.

(b) Remove the front and rear shoe nuts.

(c) Remove the sliding roof glass

INSTRUMENT PANEL

COMPONENTS

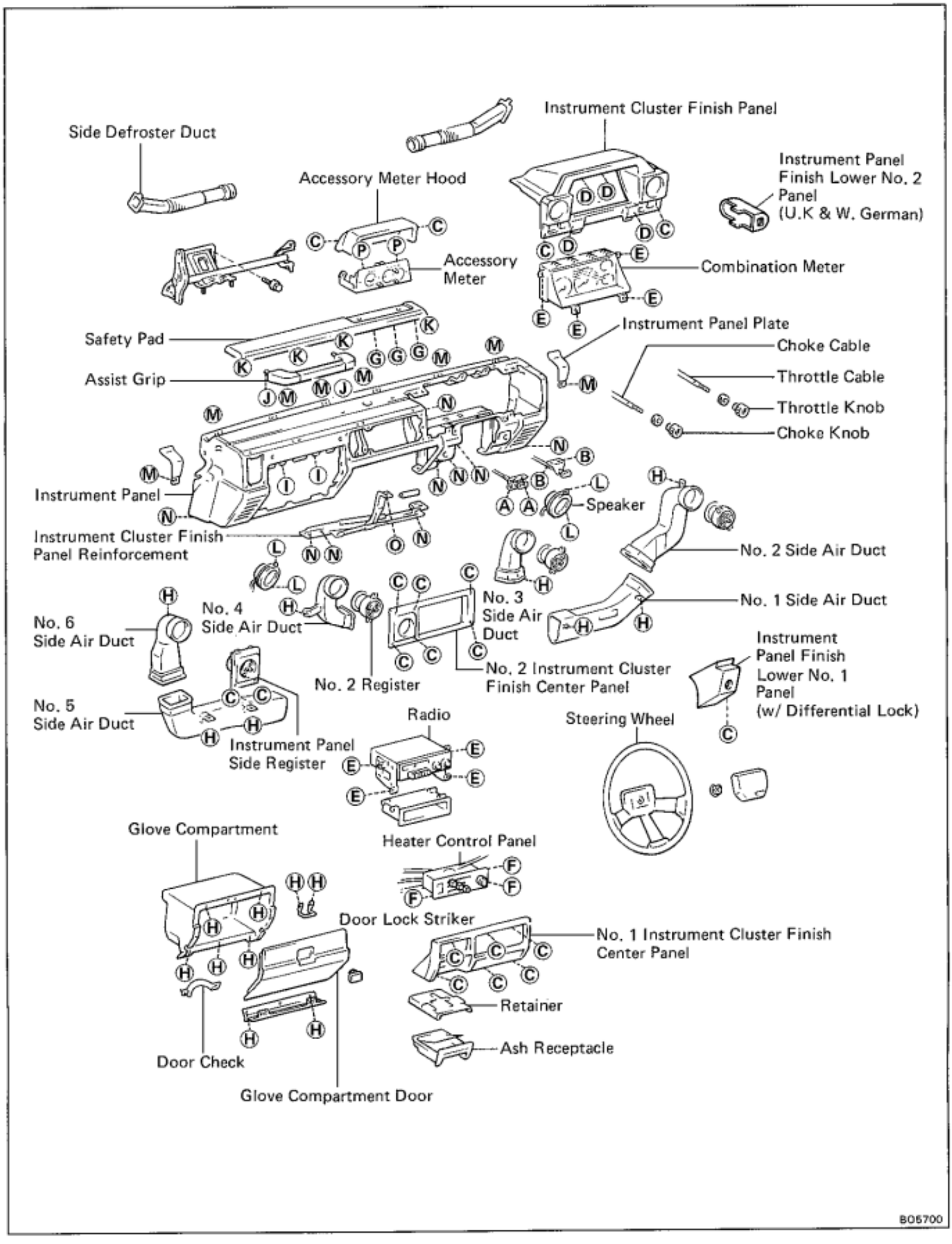

HINT: Screw sizes in the previous illustration are indicated according to the code below.

mm (in.)

Code	Shape	Size	Code	Shape	Size	Code	Shape	Size
Ⓐ		φ = 6 (0.24) L = 16 (0.63)	Ⓖ		φ = 6 (0.24)	Ⓛ		φ = 6 (0.24)
Ⓑ		φ = 6 (0.24) L = 6 (0.63)	Ⓗ		φ = 5 (0.20) L = 16 (0.63)	Ⓜ		φ = 6 (0.24) L = 20 (0.79)
Ⓒ		φ = 5 (0.20) L = 16 (0.63)	Ⓘ		φ = 6 (0.24) L = 16 (0.63)	Ⓝ		φ = 6 (0.24) L = 20 (0.79)
Ⓓ		φ = 5 (0.20) L = 25 (0.98)	Ⓙ		φ = 6 (0.24)	Ⓞ		φ = 6 (0.24) L = 10 (0.39)
Ⓔ		φ = 5 (0.20) L = 16 (0.63)	Ⓚ		φ = 6 (0.24) L = 14 (0.55)	Ⓟ		φ = 6 (0.24) L = 14 (0.55)
Ⓕ		φ = 5 (0.20) L = 12 (0.47)						

BO0960

REMOVAL OF INSTRUMENT PANEL

(See page BO-50)

1. **DISCONNECT BATTERY CABLE FROM NEGATIVE TERMINAL**

2. **REMOVE STEERING WHEEL**

3. **REMOVE STEERING COLUMN COVER**

4. **REMOVE THROTTLE CABLE**

   (a) Using a screwdriver, push in the throttle cable packing and pull off the knob.

   (b) Remove the throttle cable set nut and the cable.

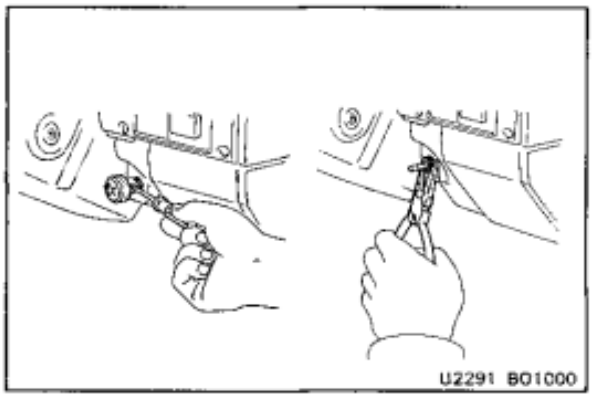

U2291 BO1000

5. **REMOVE CHOKE CABLE**

   (a) Using a screwdriver, loosen the choke knob set screw and remove the knob.

   (b) Remove the choke cable set nut and the cable.

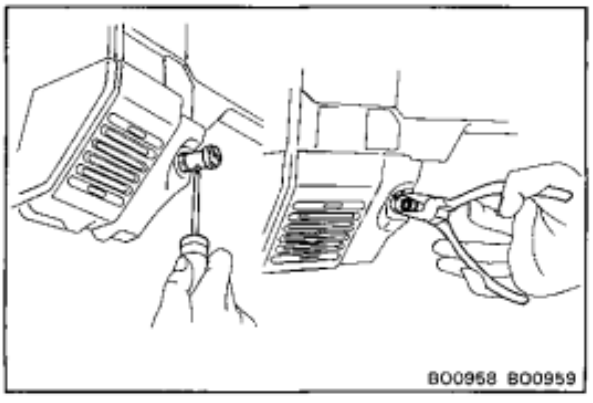

BO0958 BO0959

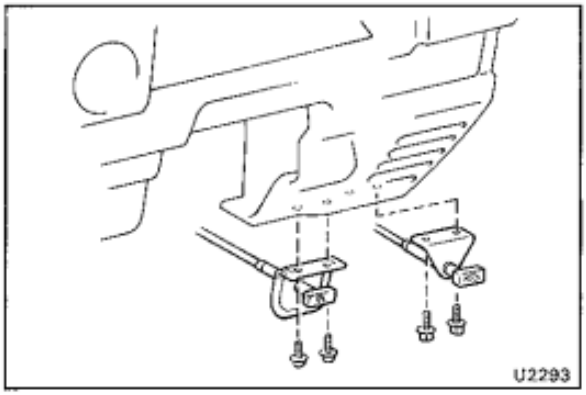

6. REMOVE HOOD LOCK RELEASE LEVER

7. REMOVE FUEL LID OPENER

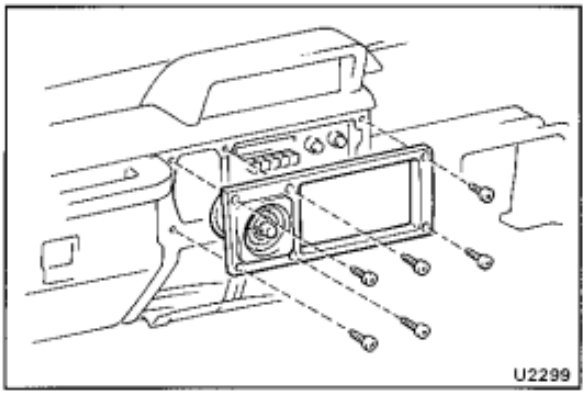

8. REMOVE NO.2 INSTRUMENT CLUSTER FINISH CENTER PANEL

Remove six screws and the center panel.

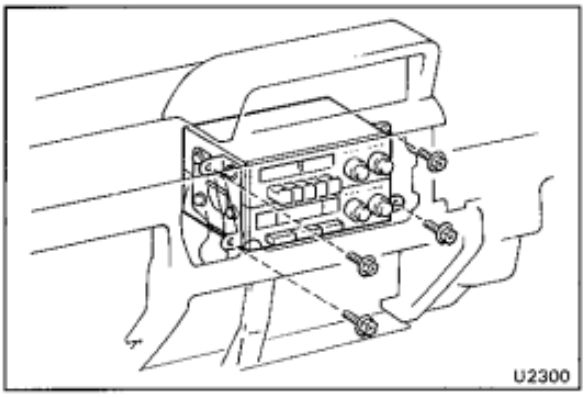

9. REMOVE RADIO

(a) Remove the four screws.

(b) Disconnect the connector and antenna cable, then remove the radio.

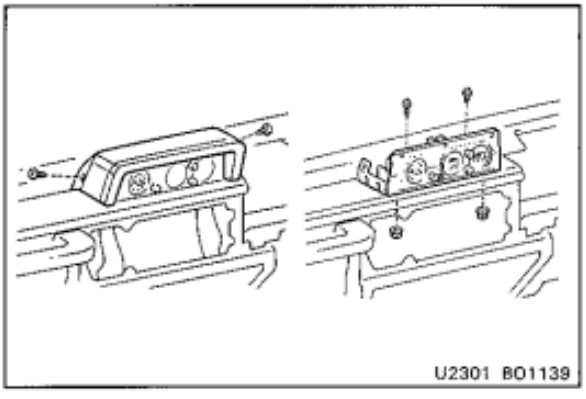

10. REMOVE ACCESSORY METER

(a) Remove the two screws and the hood.

(b) Disconnect the connector, then remove the two nuts and two screws.

(c) Remove the accessory meter.

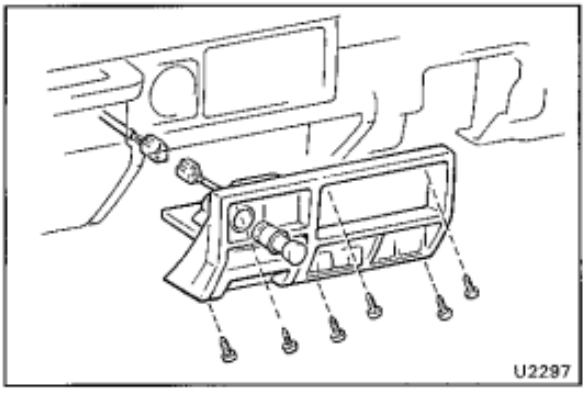

11. REMOVE NO.1 INSTRUMENT CLUSTER FINISH CENTER PANEL

(a) Remove the six screws.

(b) Disconnect the connectors and remove the panel.

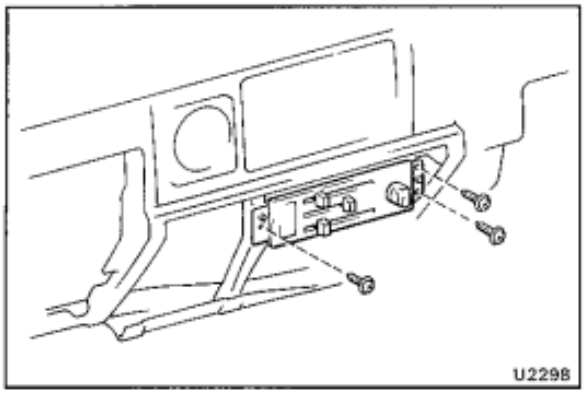

12. REMOVE HEATER CONTROL PANEL

Remove four nobes, three screws and the control panel.

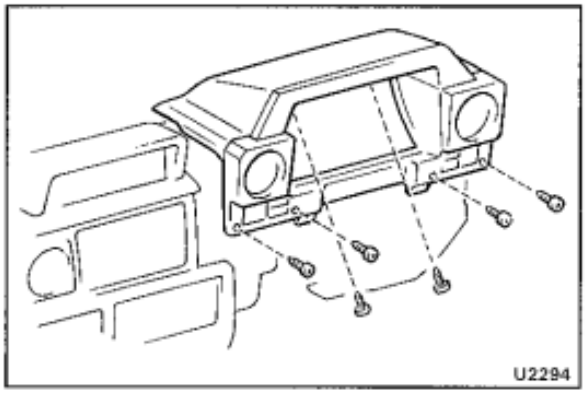

13. REMOVE INSTRUMENT CLUSTER FINISH PANEL

(a) Remove the six screws.

(b) Disconnect the connectors and warning valves, then remove the finish panel.

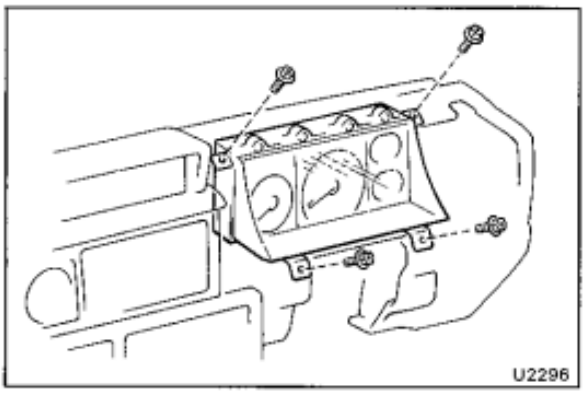

14. REMOVE COMBINATION METER

(a) Remove the four screws.

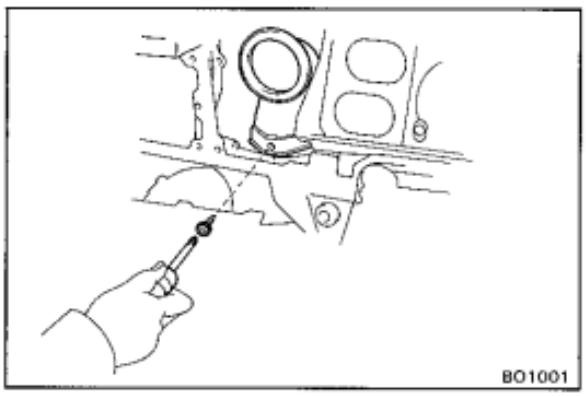

(b) Remove the No.3 side air duct.

(c) Reach in from where the No.3 side air duct has been removed and disconnect the speedometer cable and the two connectors. Remove the combination meter.

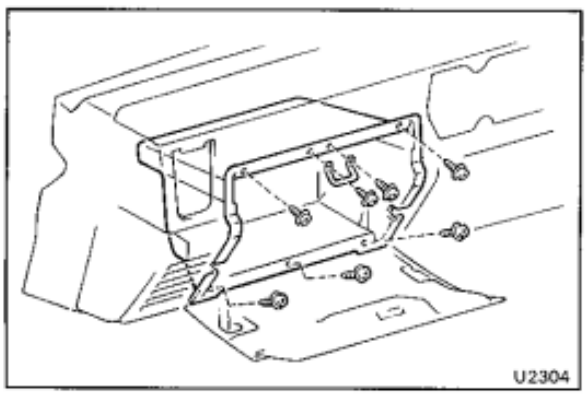

15. REMOVE GLOVE COMPARTMENT

(a) Remove the two screws and the door lock striker.

(b) Remove the five screws and the glove compartment.

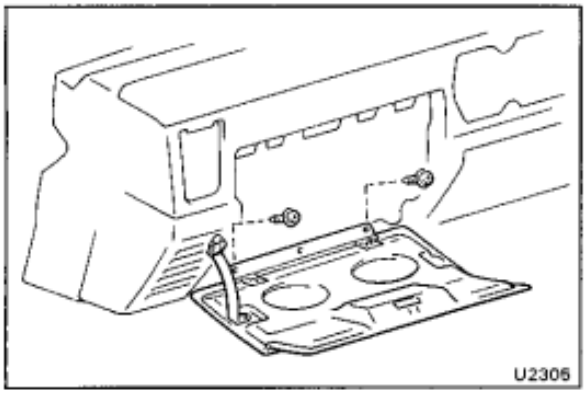

16. REMOVE GLOVE COMPARTMENT DOOR

Remove two screw and the door.

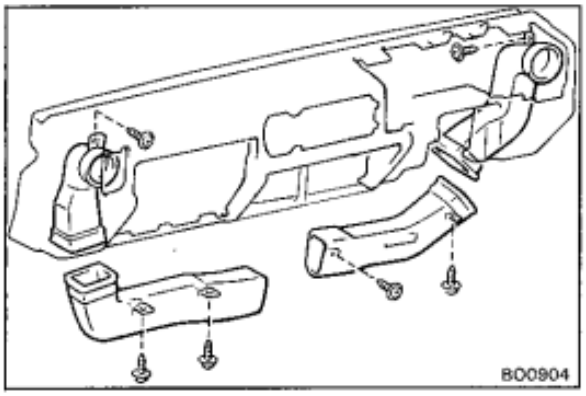

17. REMOVE SIDE AIR DUCT

HINT: The No.4 side air duct must be removed.

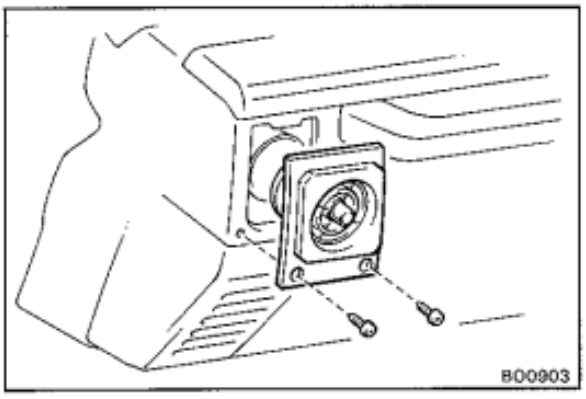

18. REMOVE INSTRUMENT PANEL SIDE REGISTER

19. REMOVE BOTH SIDE DEFROSTER DUCTS

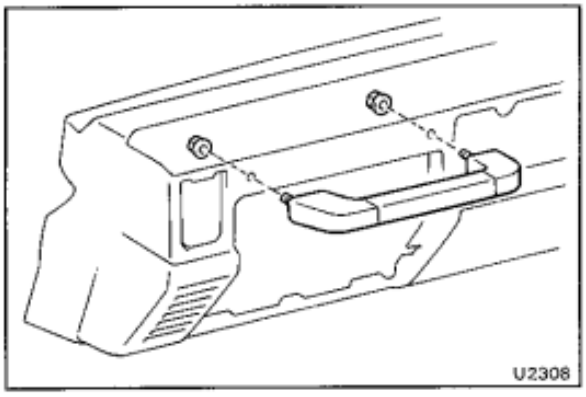

20. REMOVE ASSIST GRIP

Remove two nuts and the assist grip.

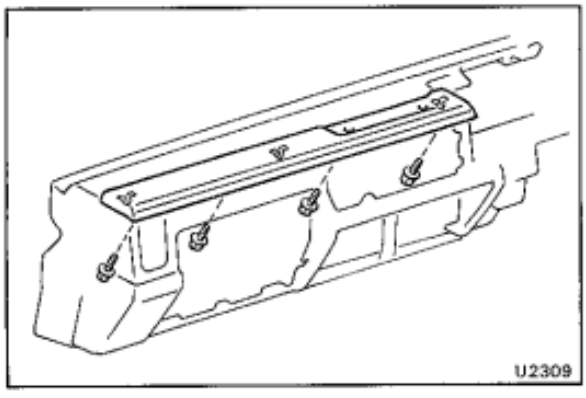

21. REMOVE SAFETY PAD

(a) Remove the four screws.

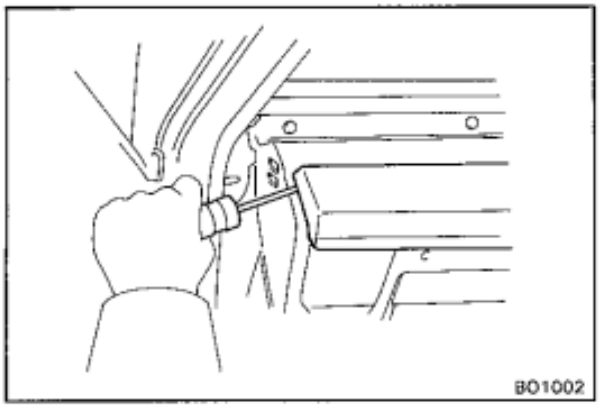

(b) Using a screwdriver, pry up the safety pad and remove it with the three clips.

HINT: Tape the screwdriver tip before use.

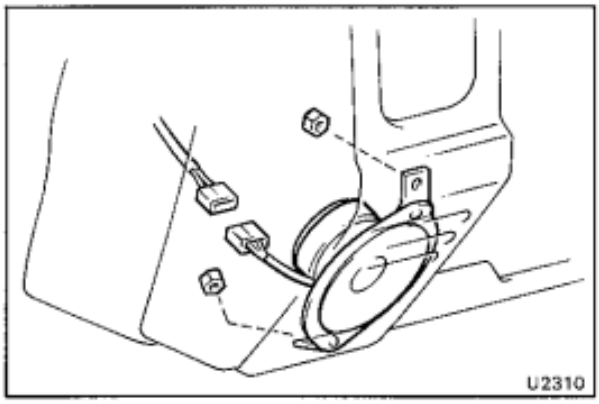

22. REMOVE BOTH SPEAKERS

(a) Disconnect the connector.

(b) Remove the two nuts and the speaker.

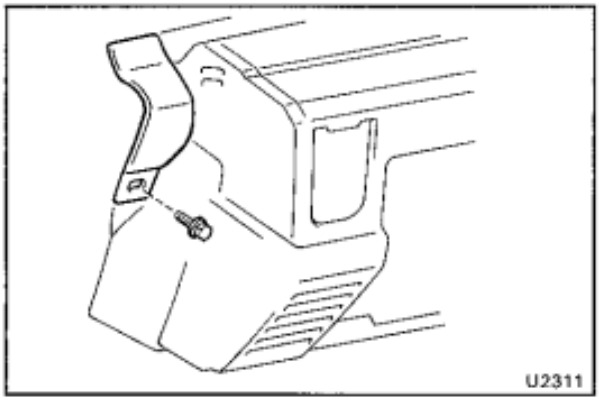

23. REMOVE BOTH INSTRUMENT PANEL PLATES

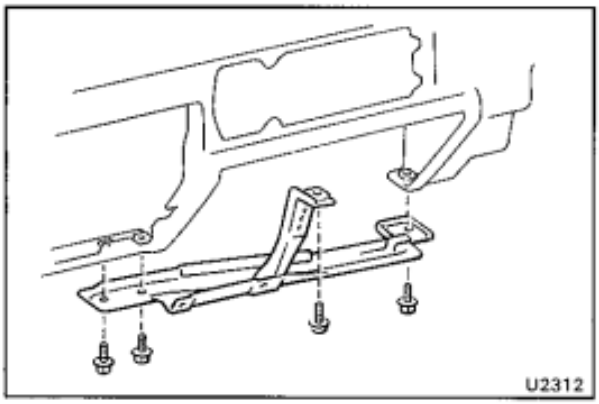

24. REMOVE INSTRUMENT CLUSTER FINISH PANEL REINFORCEMENT

Remove four bolts and the reinforcement.

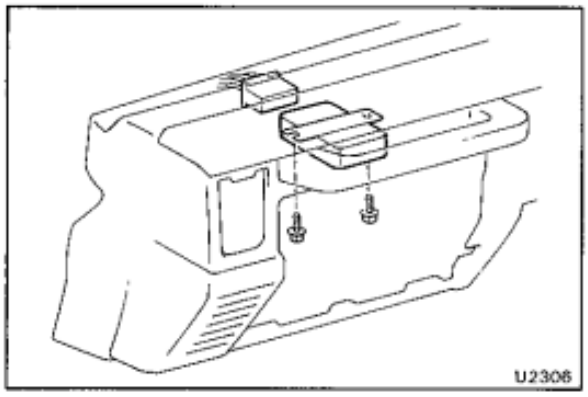

25. REMOVE INSTRUMENT PANEL

(a) Remove the following parts:

(EUR)
- Red hazard indicator relay
- Rear fog light relay
- Pre-heating timer (LJ)
- Daytime running light relay

(Saudi Arabia)
- Emission control relay

(Australia)
- Emission control relay
- Preheating timer (LJ)

(b) Remove the three wiring harness clamps from the instrument panel.

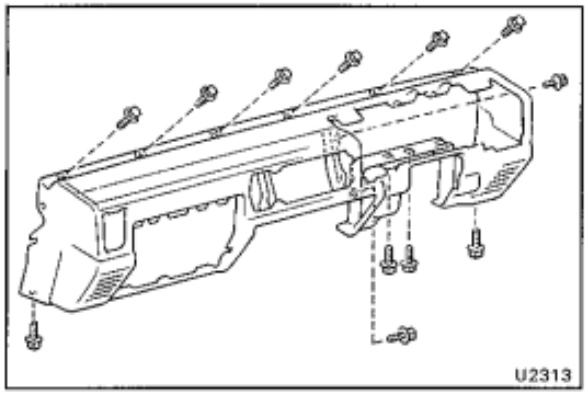

(c) Remove the steering column upper support.

(d) Remove the twelve bolts and the instrument panel.

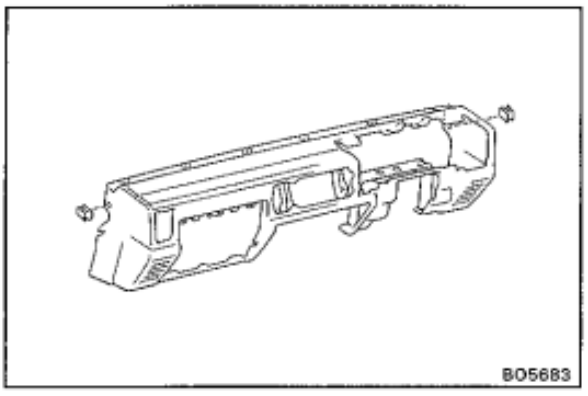

26. REMOVE TWO CLIPS FROM INSTRUMENT PANEL

INSTALLATION OF INSTRUMENT PANEL

(See page BO-50)

INSTALL INSTRUMENT PANEL IN REVERSE SEQUENCE OF REMOVAL

TARPAULIN

REMOVAL OF TARPAULIN

1. **UNPEEL MAGIC TAPE AROUND TARPAULIN SPARS**

   70 series 10 places

   73 series 15 places

70 Series

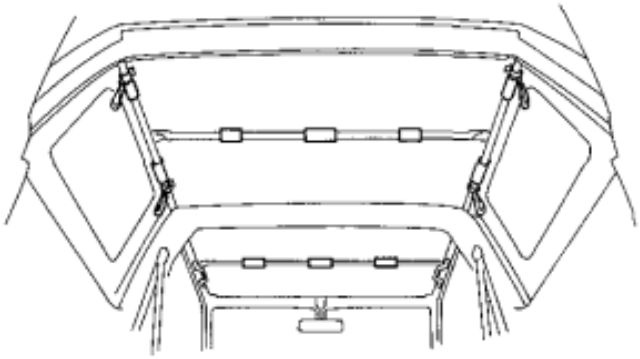

73 Series

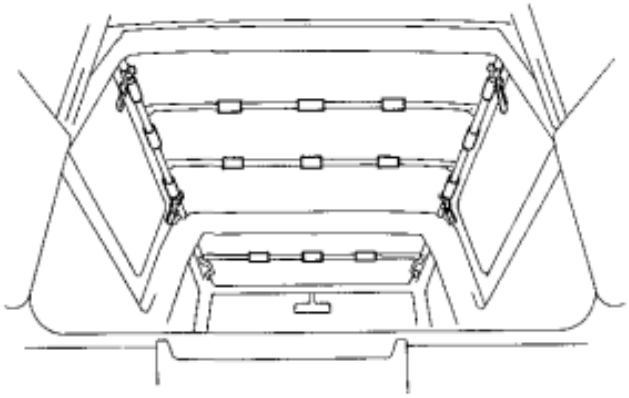

BO0928 BO0929

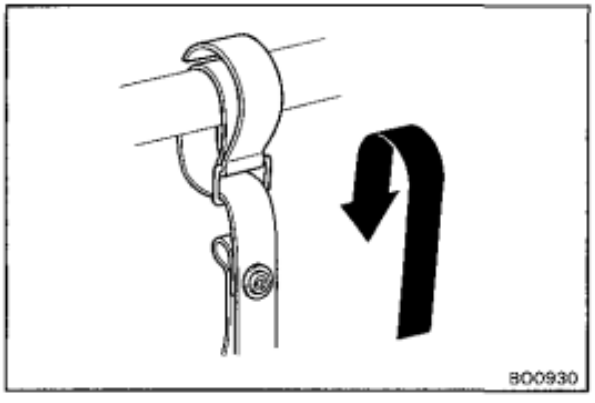

BO0930

2. ***RELEASE FOUR BELTS WRAPPED AROUND TARPAULIN SPARS (TWO EACH SIDE)***

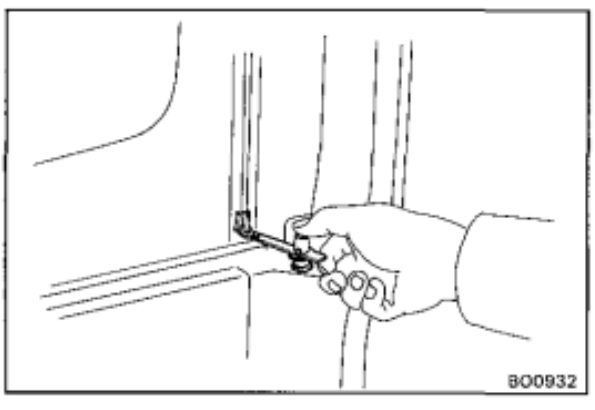

BO0932

3. **UNZIP FOUR ZIPPERS (TWO EACH SIDE)**

   Release the burglary prevention cock and unzip the zipper.

4. REMOVE TWO BACK DOOR OPENING TRIM CORNER JOINTS AND THREE OPENING TRIMS

5. UNPEEL FIVE STRIPS OF MAGIC TAPE ABOVE BACK DOOR

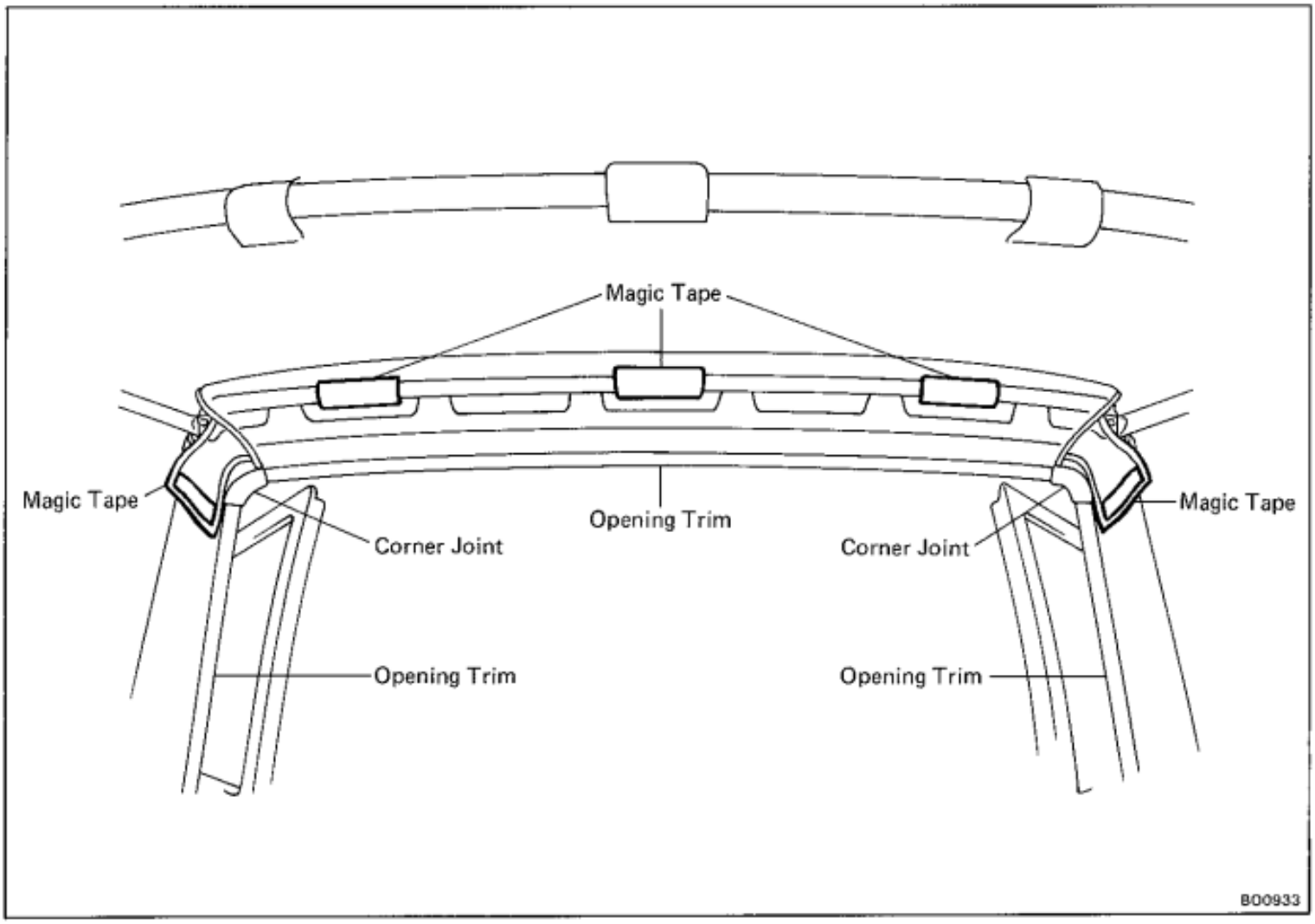

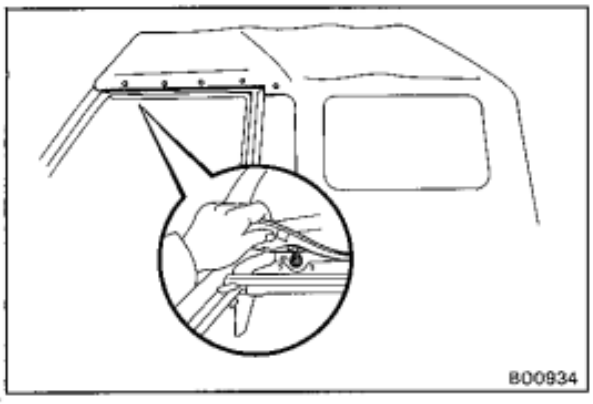

6. DISCONNECT ROOF SIDE RAIL AS WELL AS TEN SNAPS (FIVE EACH SIDE)

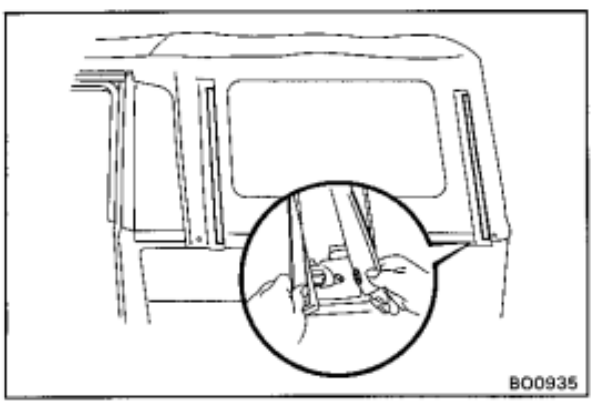

7. UNPEEL TWELVE STRIPS OF MAGIC TAPE OUTSIDE VEHICLE (SIX EACH SIDE), AND UNHOOK FOUR SNAPS (TWO EACH OUTSIDE)

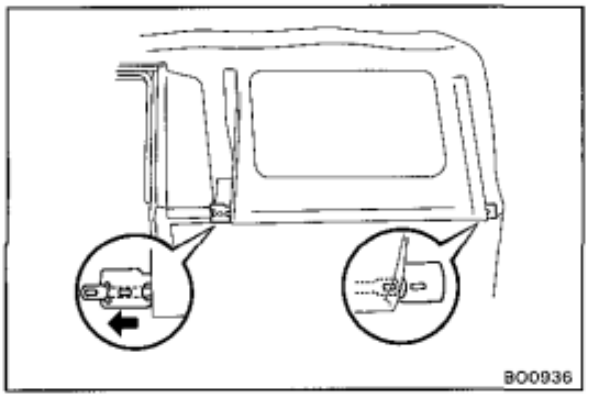

8. FREE BOTH SIDEWALL PIPES FROM SIDEWALL OF TARPAULIN

(a) Disconnect both ends of the pipe from the hooks.

(b) From the back end of the pipe, push the pipe forward so the opposite end protrudes a few inches from the service notch and the back end slides out of the service hole.

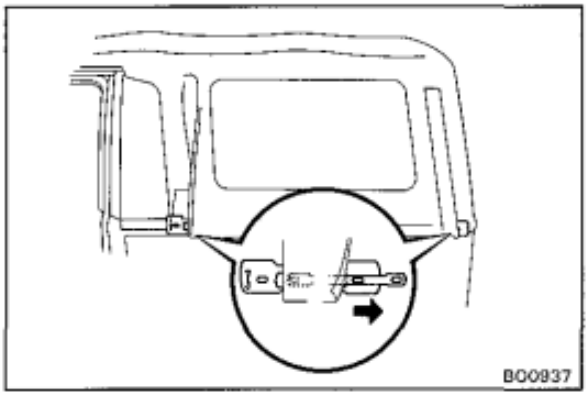

(c) Pull the pipe out by the back end.

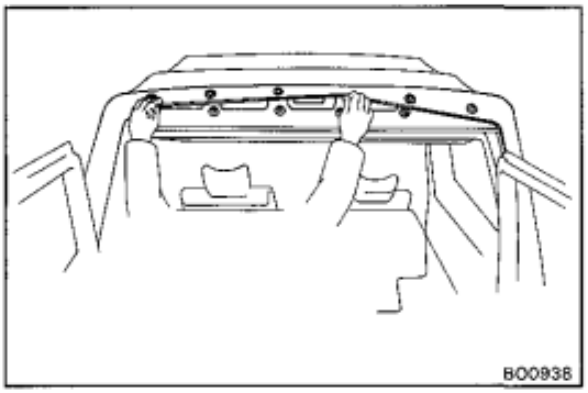

9. DISCONNECT SIX SNAPS ABOVE BACK DOOR

10. SLIDE BOTH WATER SEALS UP AND OUT OF ROLL BAR SIDE CHANNEL

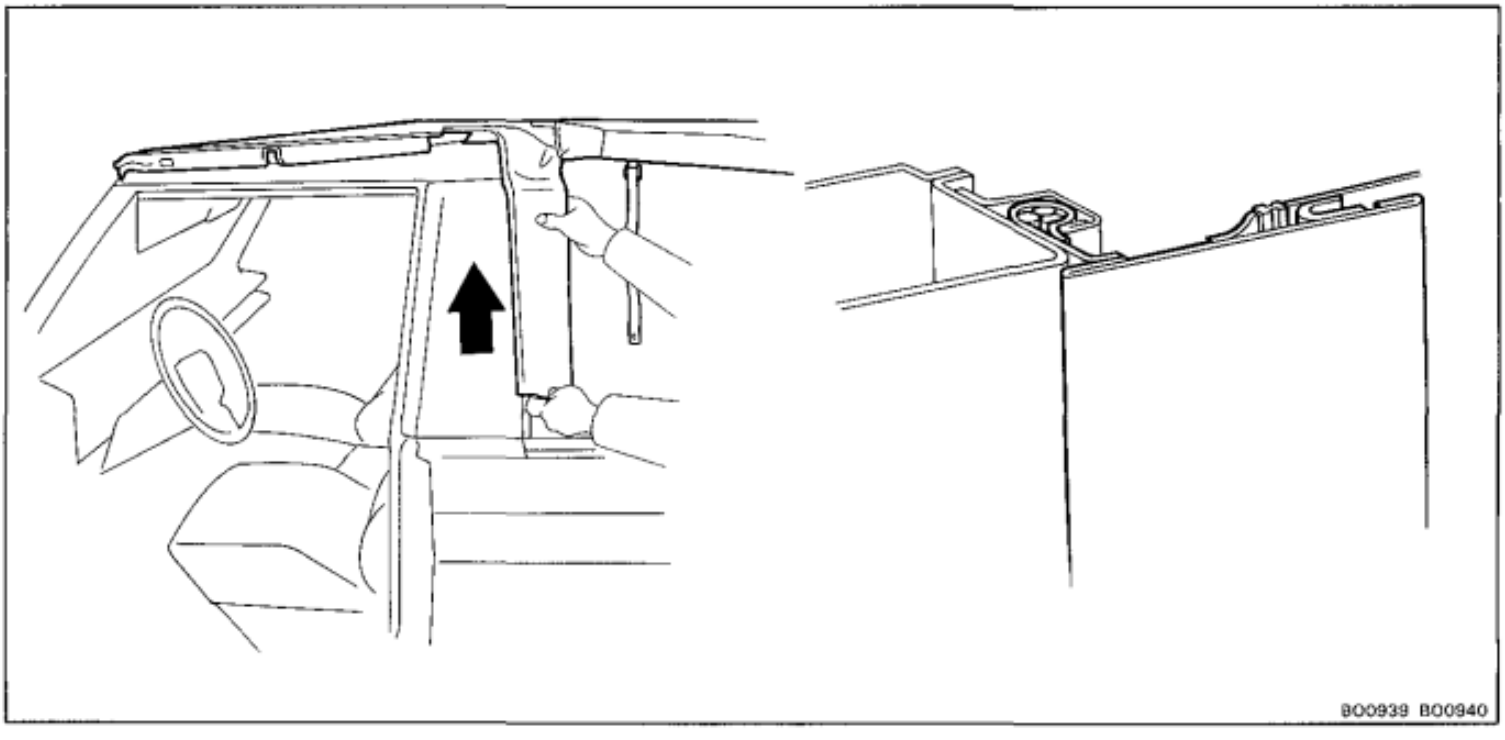

11. SLIDE BOTH WATER SEALS UP AND OUT OF REAR PILLAR CHANNEL

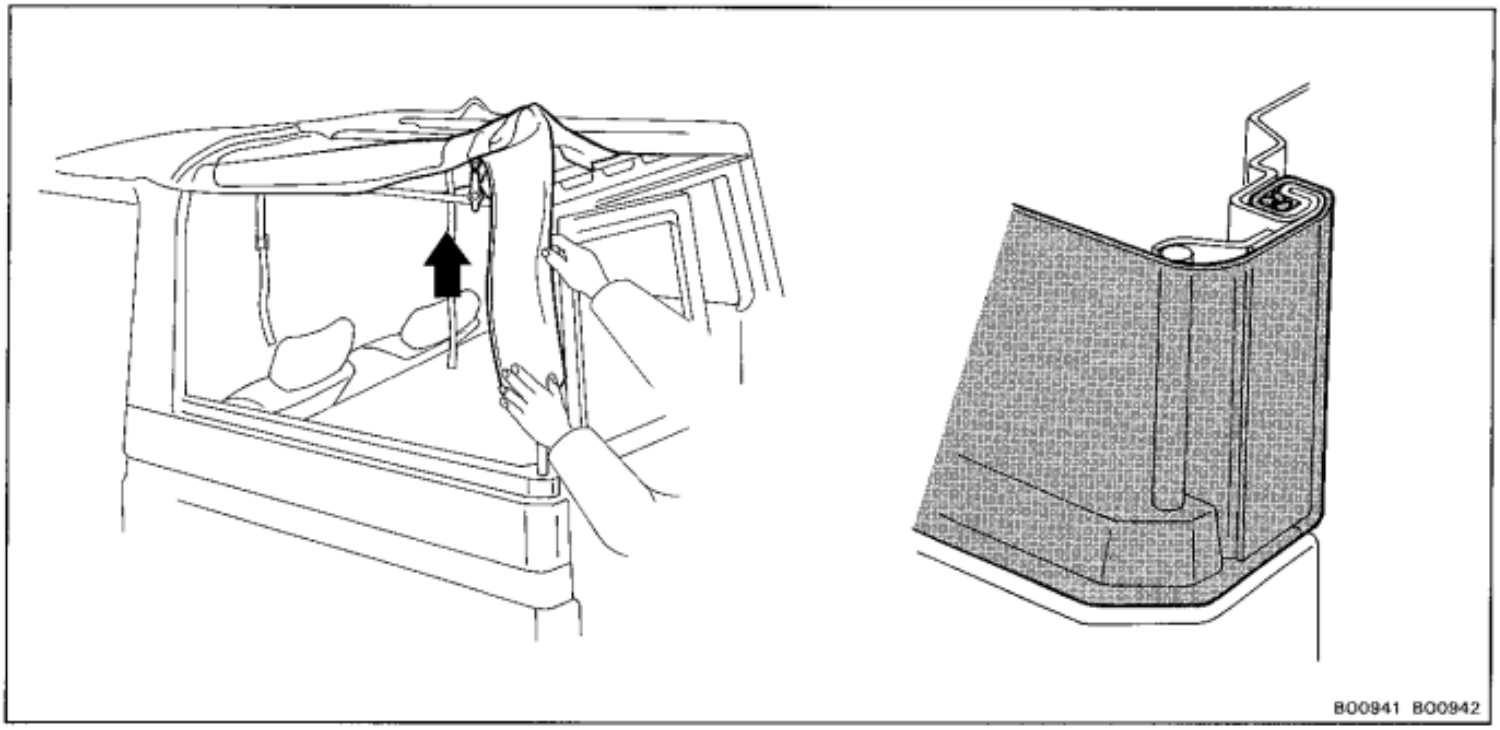

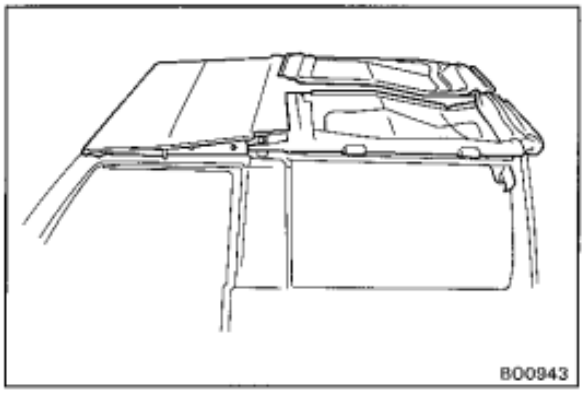

12. FLIP UP SIDEWALL ONTO ROOF, ABOVE CARGO COMPARTMENT

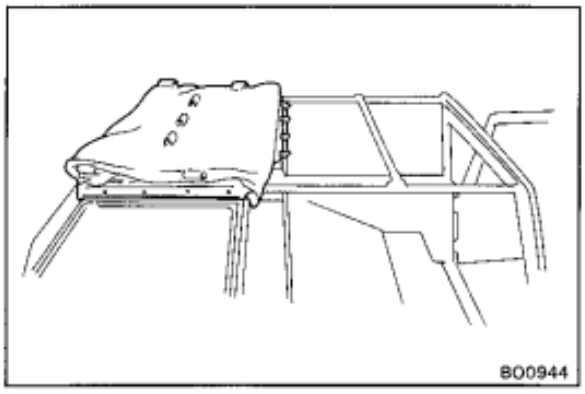

13. FLIP FOLDED BACK HALF OF TARPAULIN ONTO ROOF ABOVE DRIVER'S COMPARTMENT

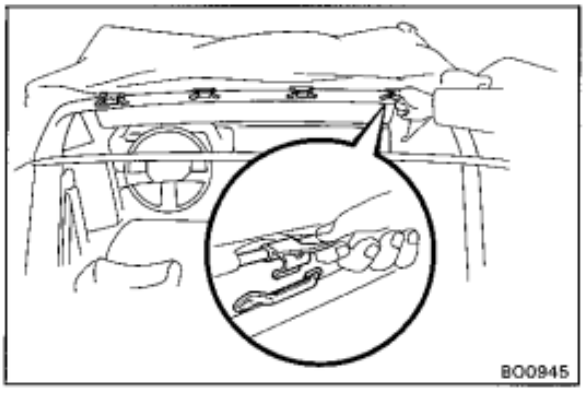

14. DISCONNECT FOUR CLIPS ABOVE BACK SIDE OF ROLL BAR

15. **SLIDE WHOLE TARPAULIN TO EITHER VEHICLE RIGHT OR LEFT TO FREE FRONT WATER SEAL AND REMOVE TARPAULIN**

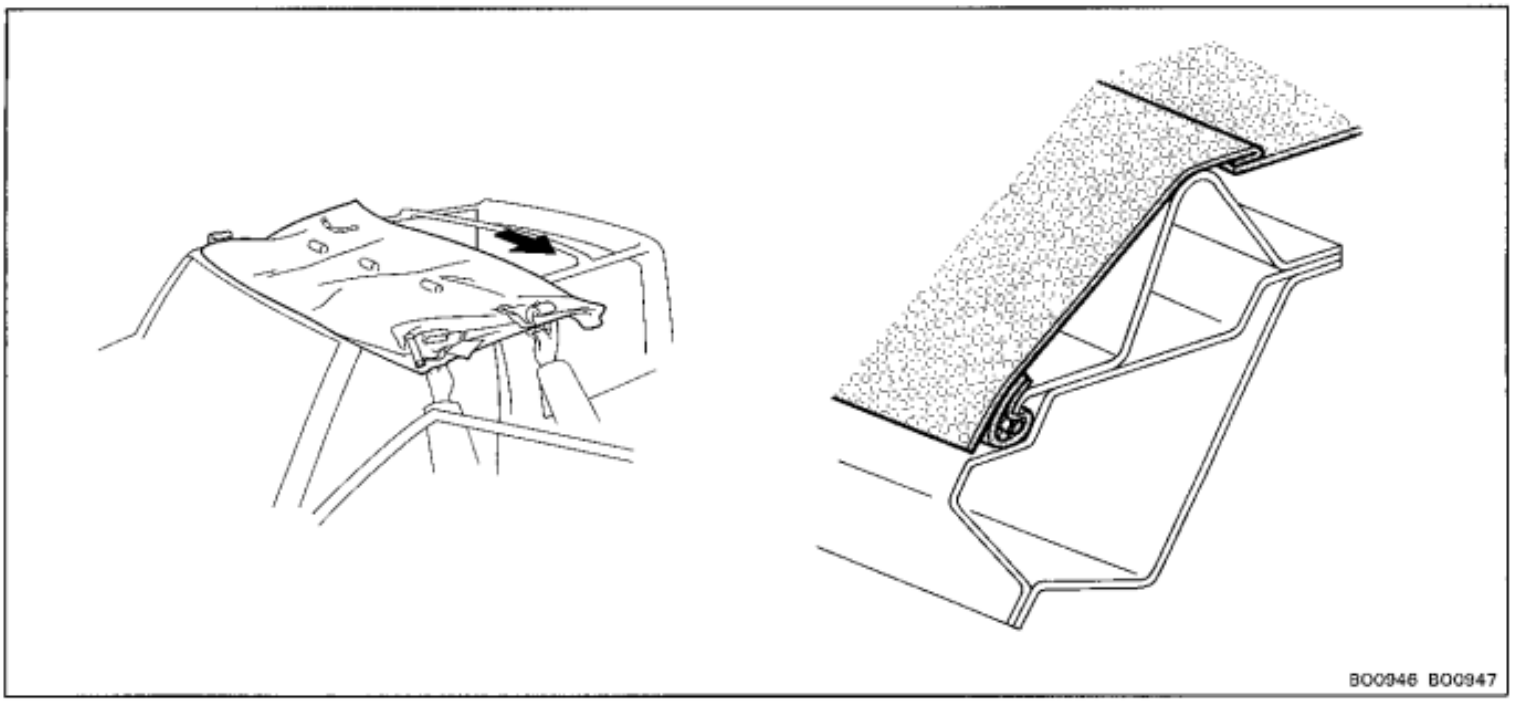

BO0946 BO0947

INSTALLATION OF TARPAULIN

INSTALL TARPAULIN IN REVERSE SEQUENCE OF REMOVAL

HINT: Before installing the tarpaulin, adjust the positioning of the front and back doors.

TARPAULIN SPARS

COMPONENTS

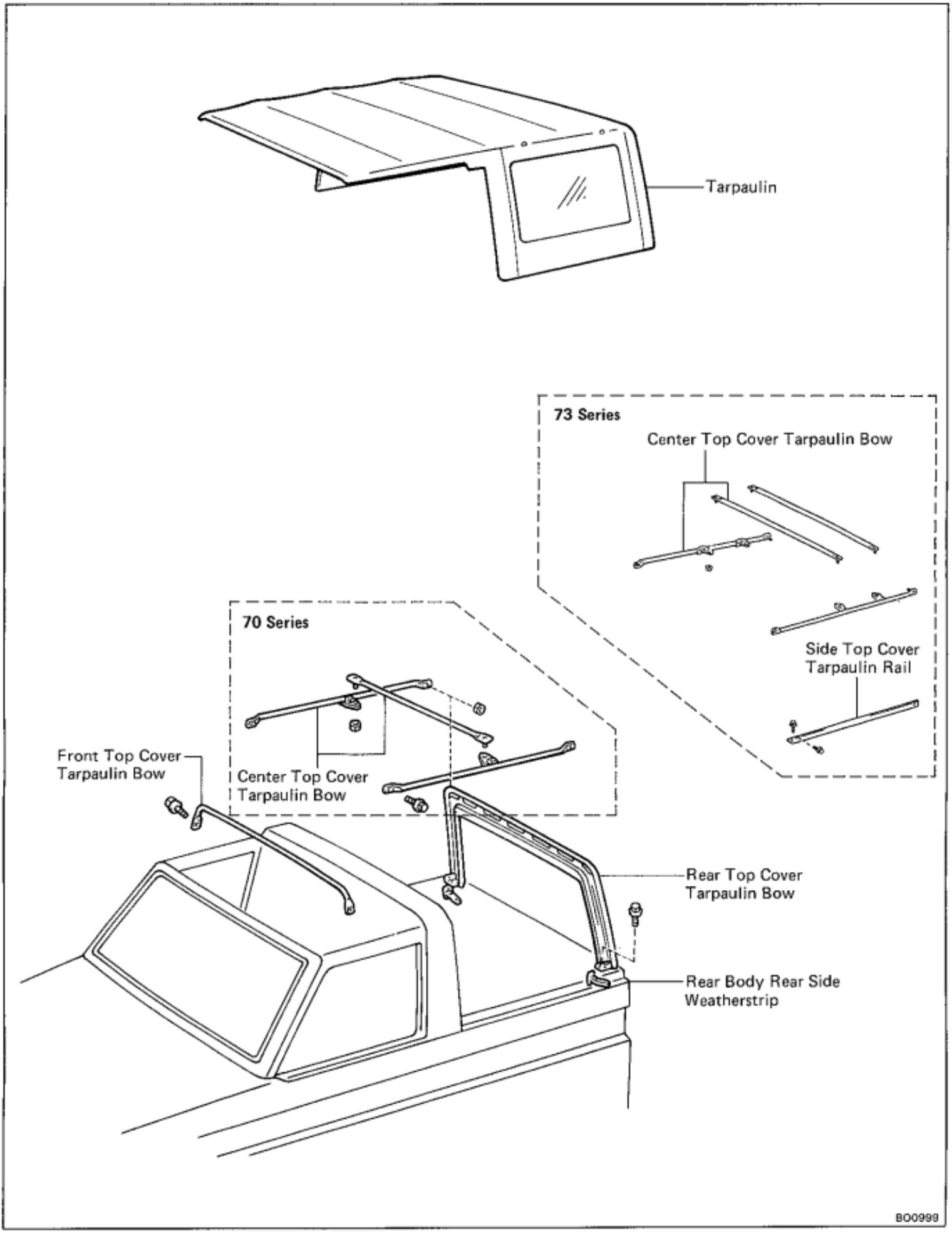

FRP TOP

COMPONENTS

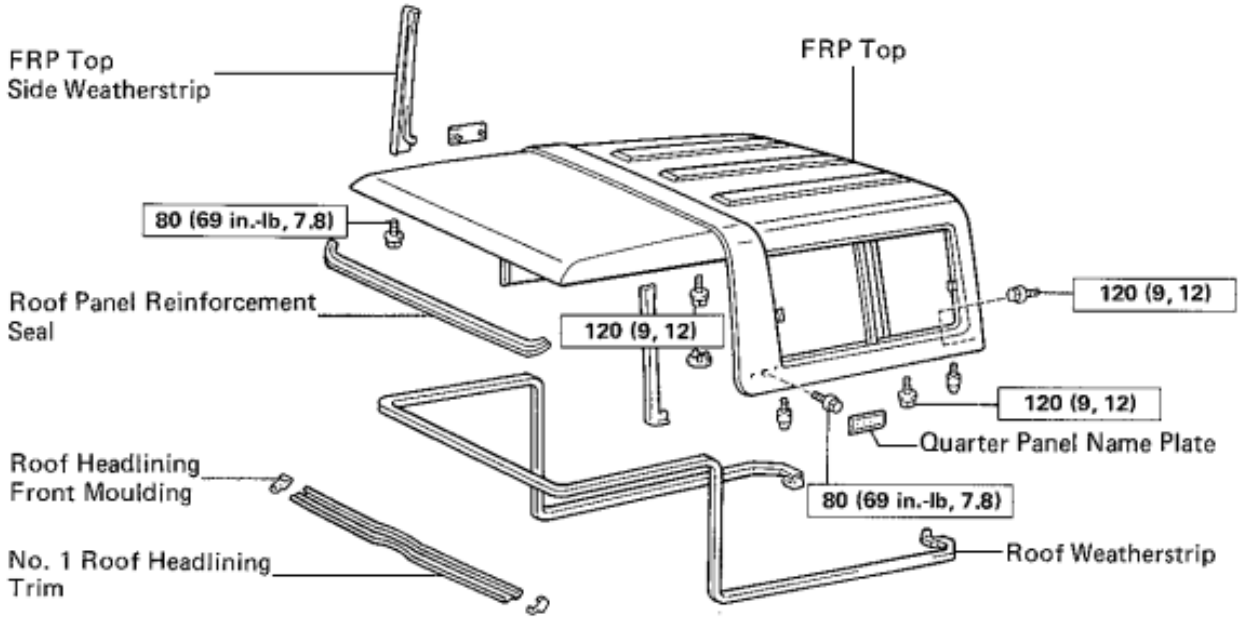

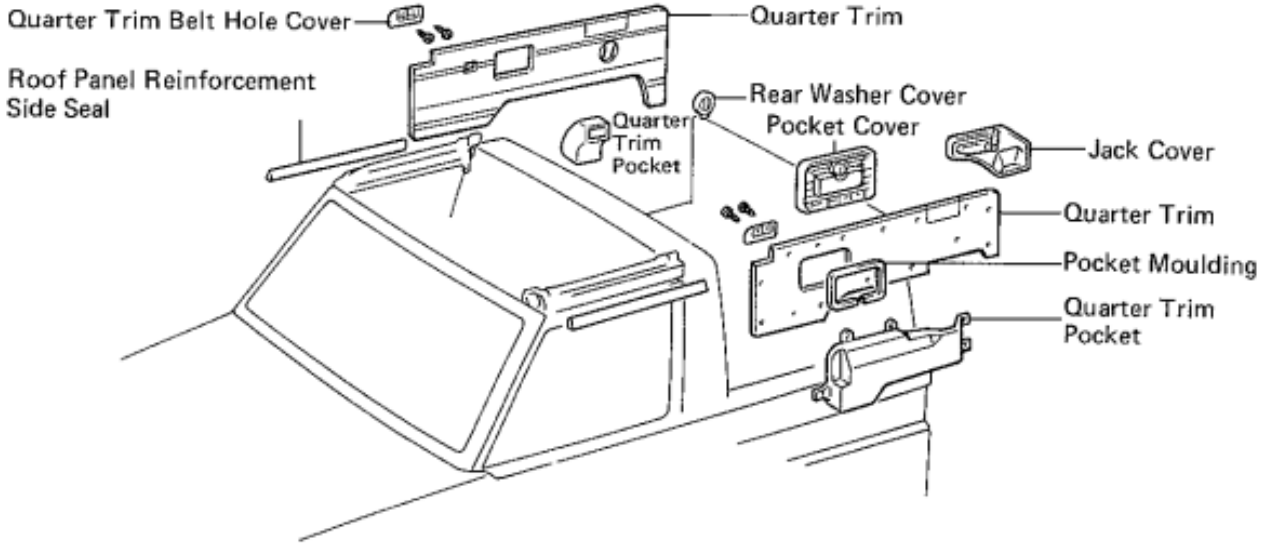

kg-cm (ft-lb, N·m) : Specified torque

BO5697

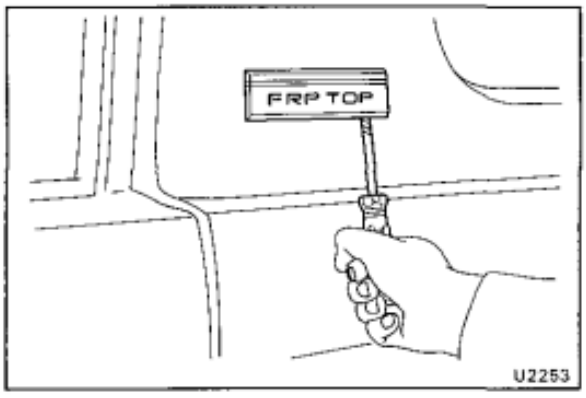

REMOVAL OF FRP TOP

(See page BO-58)

1. **REMOVE BOTH QUARTER PANEL NAME PLATES**

   Using a screwdriver, pry out the name plate from the underside.

   HINT:

   1. Tape the screwdriver tip before use.
   2. Be careful not to damage the FRP top and name plate.

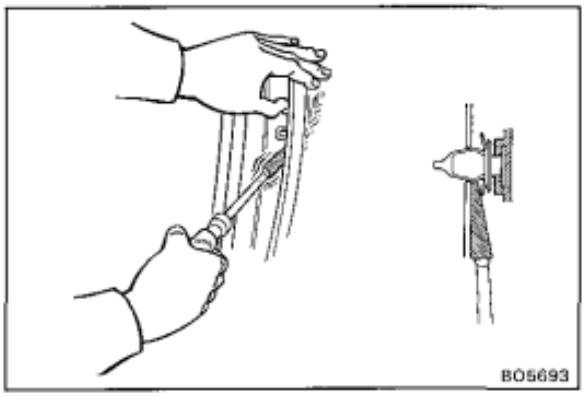

2. **REMOVE ROOF HEADLINING FRONT MOULDING AND NO.1 TRIM**

3. **REMOVE BOTH QUARTER TRIMS**

   (a) Remove two screws and both quarter trim belt hole covers.

   (b) Pry loose the clips with a screwdriver and remove the trim.

   HINT: Tape the screwdriver tip before use.

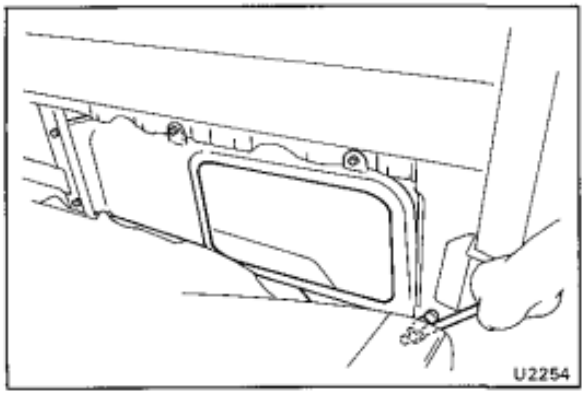

4. **REMOVE QUARTER TRIM POCKET**

   Remove the five bolts and the pocket.

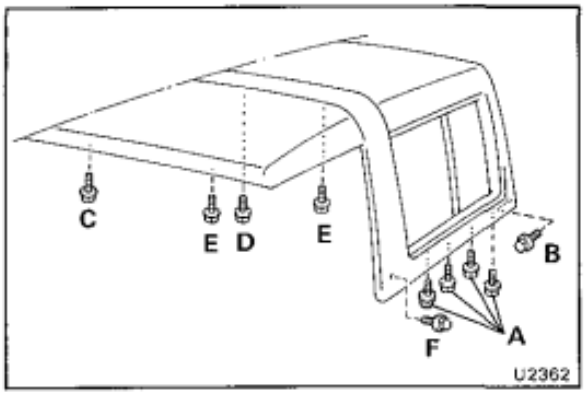

5. ***REMOVE FRP TOP***

   (a) Remove the four plugs on the roll bar and the lower rear pillar bolt caps (on FRP TOP, two each side).

   (b) Remove the ten bolts (each side) shown in the installation.

   HINT: After removing bolt F, remove the remaining bolts.

   (c) Remove the FRP top by pulling directly up.

INSTALLATION OF FRP TOP

(See page BO-63)

INSTALL FRP TOP IN REVERSE SEQUENCE OF REMOVAL

Torque: 6 mm bolt 80 kg-cm (69 in.-lb, 7.8 N·m)
8 mm bolt 120 kg-cm (9 ft-lb, 12 N·m)

HINT: Tighten the FRP top bolts (ten each side) in the order shown in the illustration.

Check that the seal and weatherstrip are not tangled and install.

ROLL BAR

COMPONENTS

FRP TOP

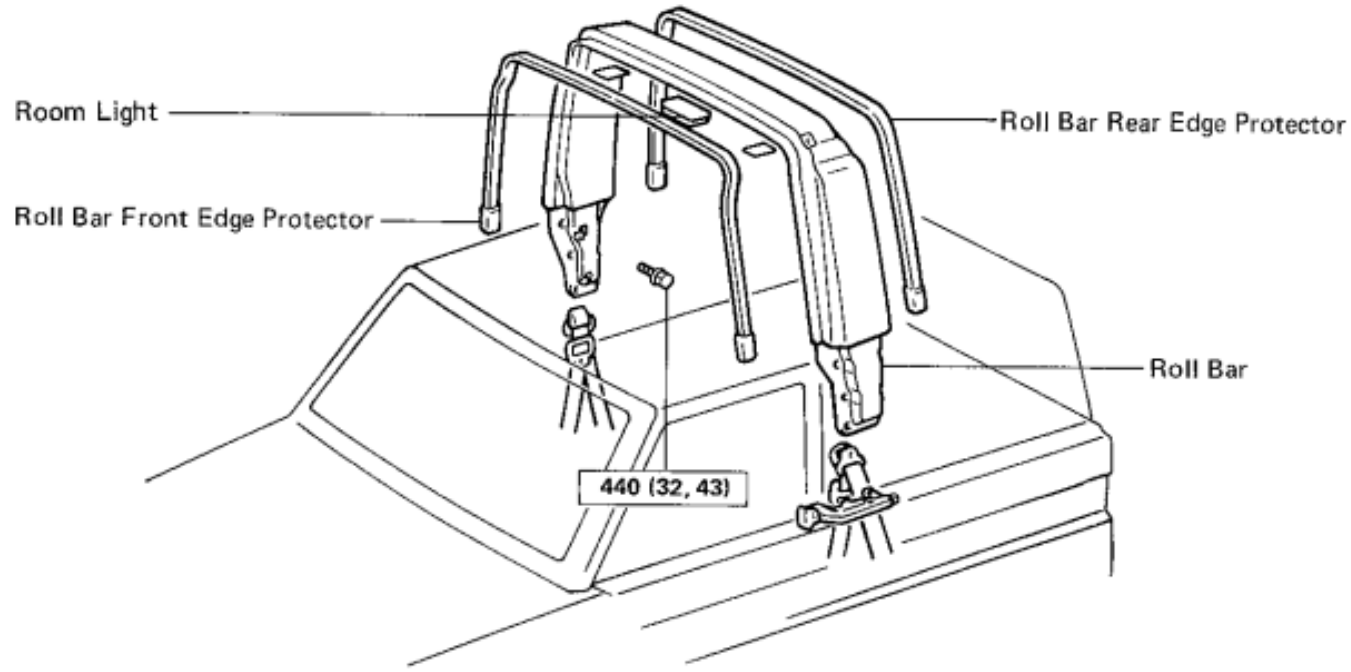

CANVAS TOP

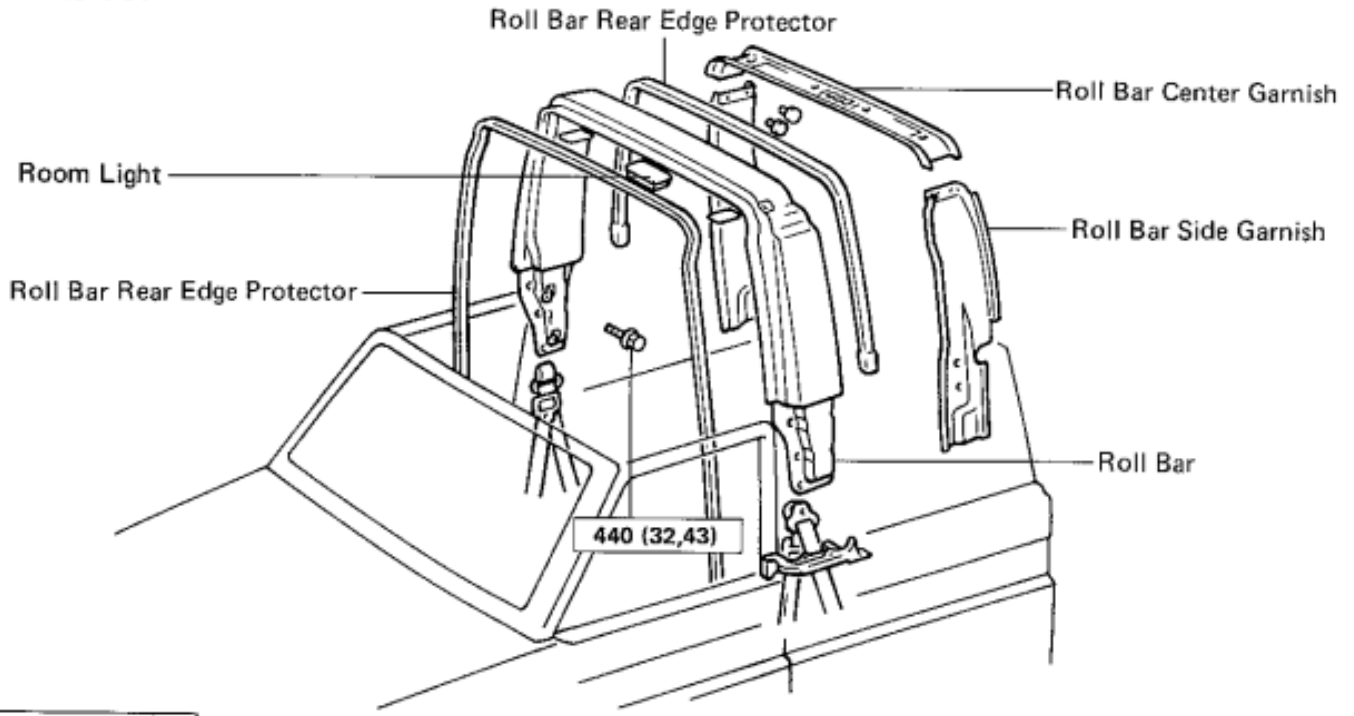

kg-cm (ft-lb, N·m) : Specified torque

BO1022
BO5688

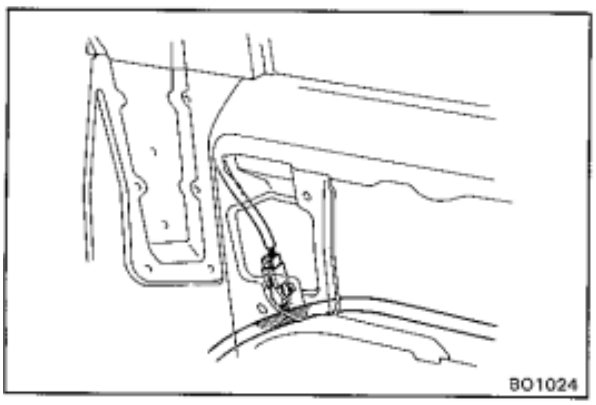

HINT: Remove the roll bar after disconnecting the wire harness for the room lamp inside the right quarter trim.

SEAT

COMPONENTS

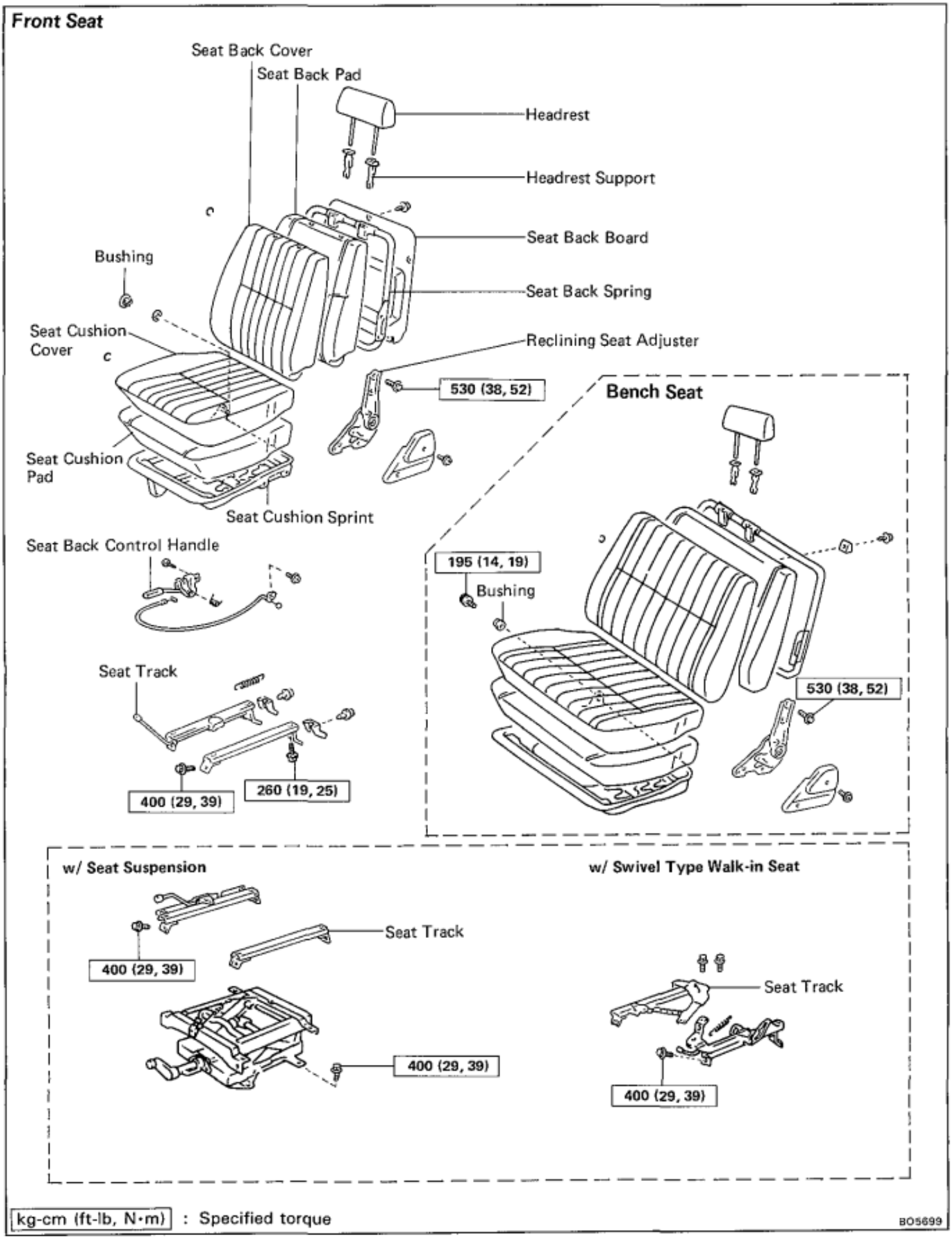

kg-cm (ft-lb, N·m) : Specified torque

BO5699

COMPONENTS (Cont'd)

Rear Bench Seat (70, 73 Series)

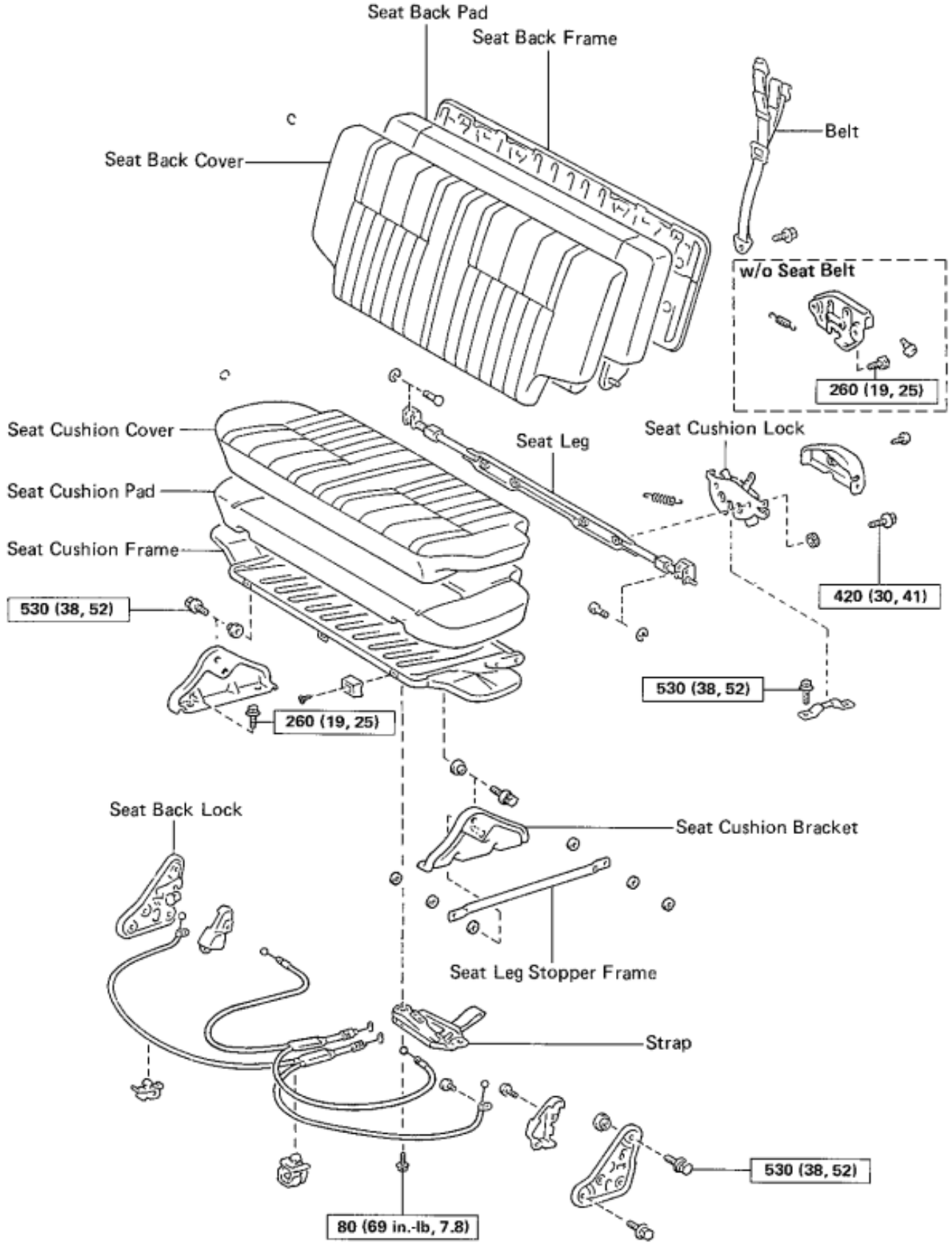

kg-cm (ft-lb, N·m) : Specified torque

BO1110

COMPONENTS (Cont'd)

Rear Bench Seat (75 Series)

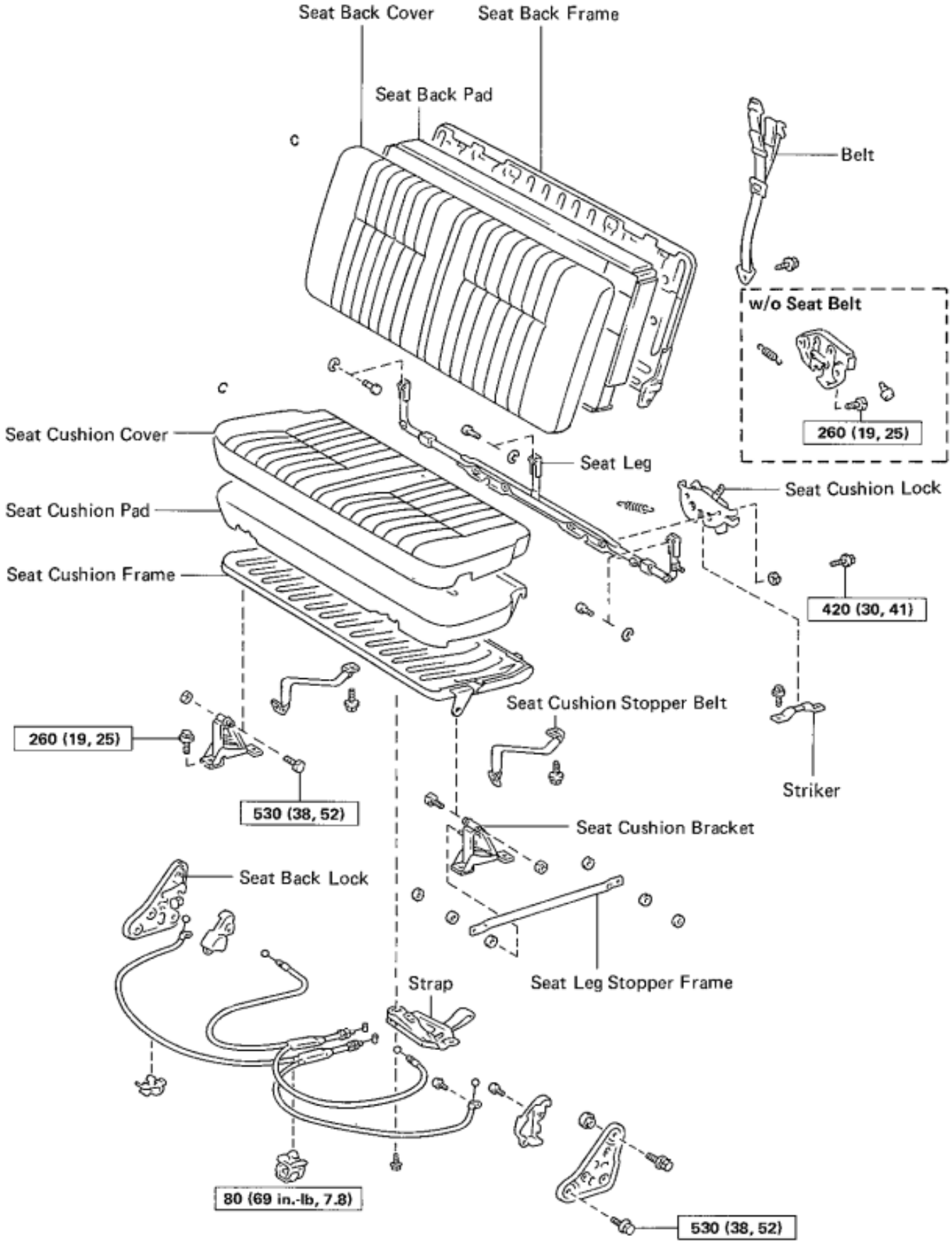

kg-cm (ft-lb, N·m) : Specified torque

BO1111

COMPONENTS (Cont'd)

Rear Parallel Seat

(70 Series)

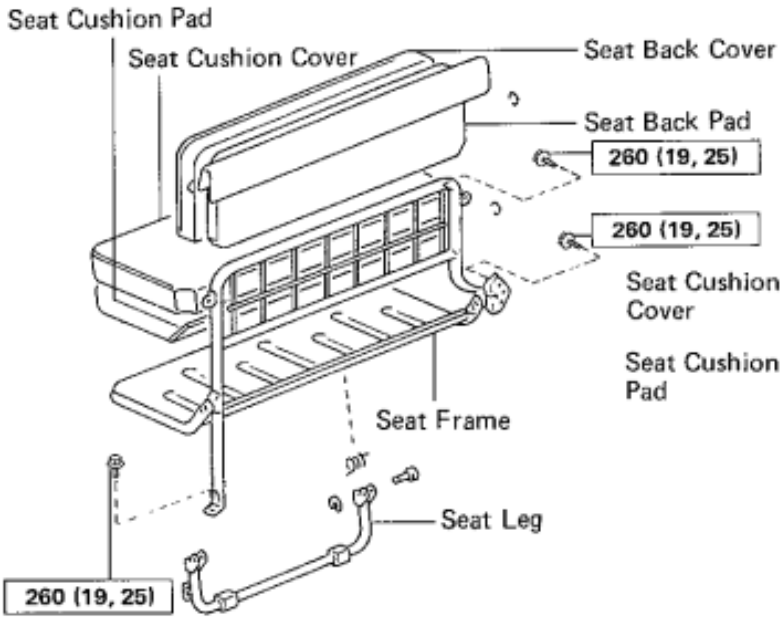

(73 Series)

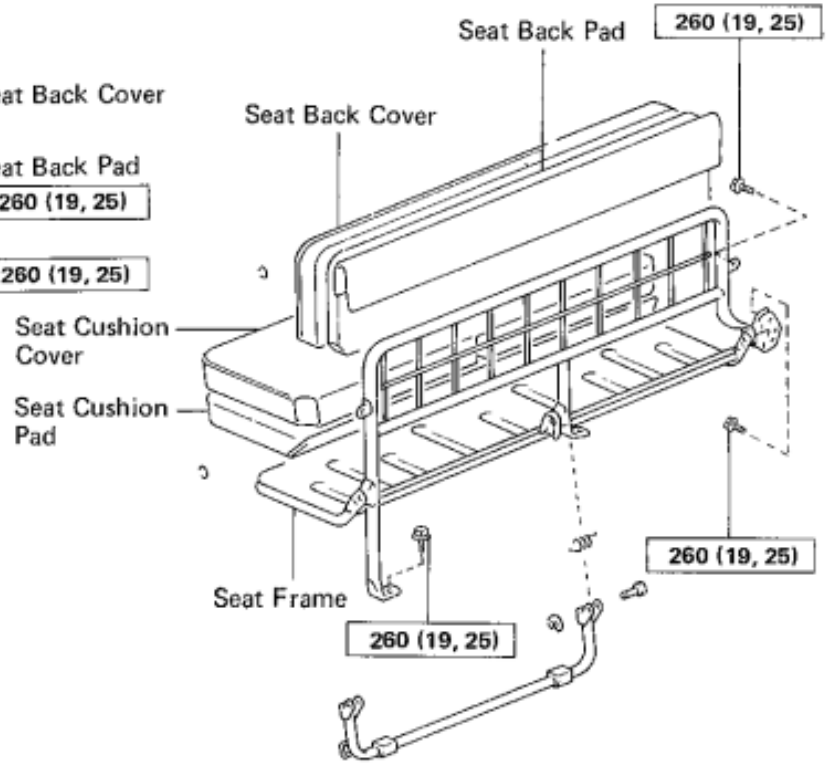

(75V Series)

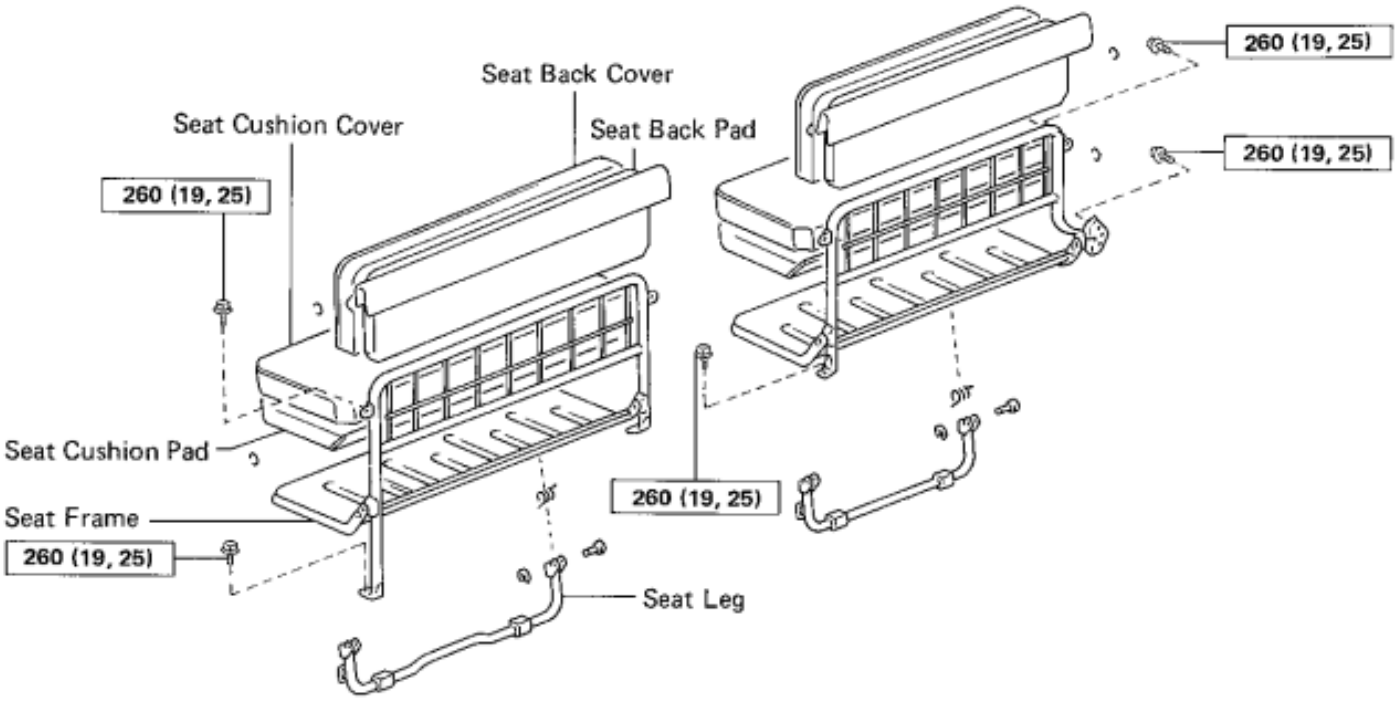

kg-cm (ft-lb, N·m) : Specified torque

BO1106 BO1112 BO1113

COMPONENTS (Cont'd)

Rear Parallel Seat

(75P Series)

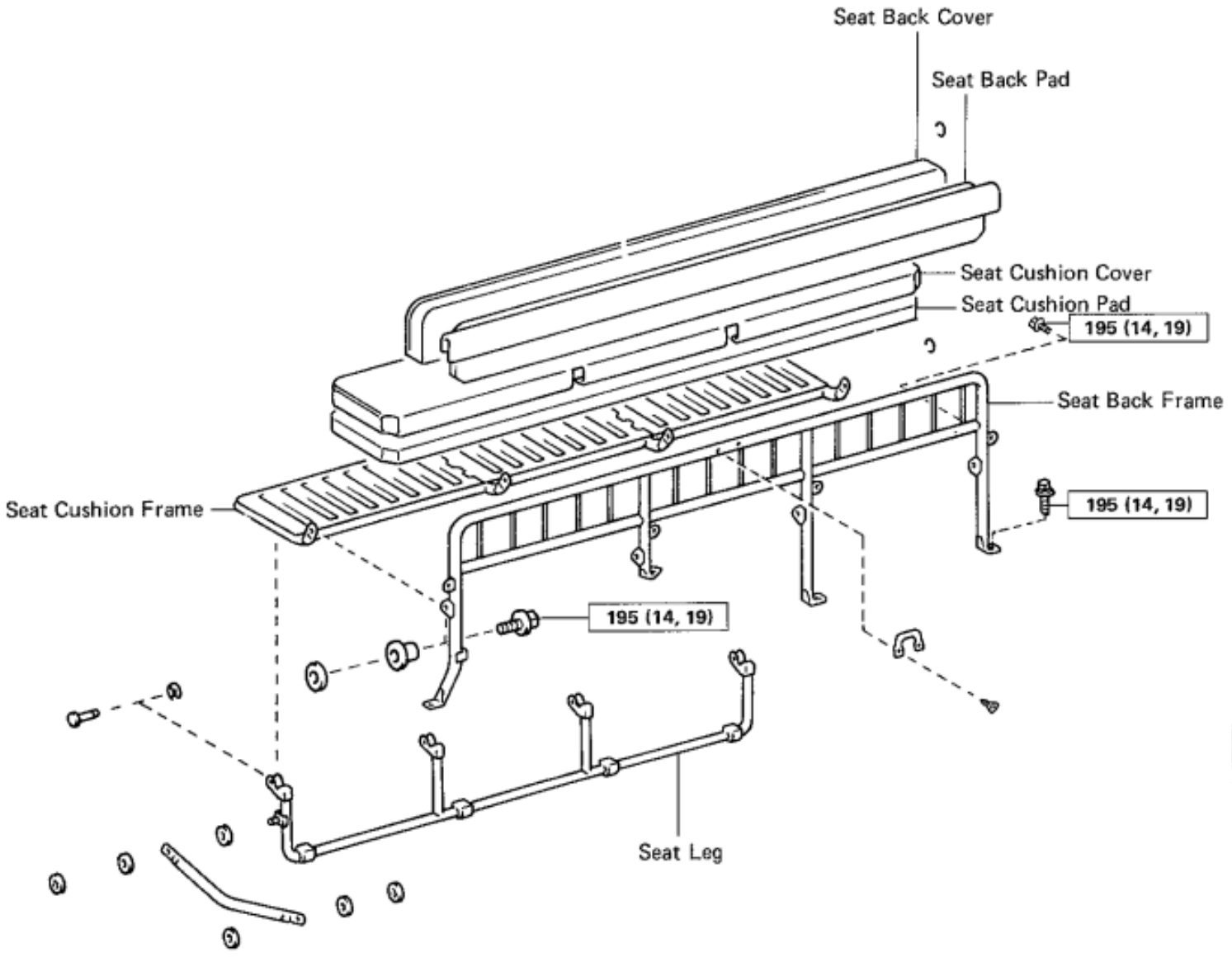

kg-cm (ft-lb, N·m) : Specified torque

BO1114

SEAT BELTS

COMPONENTS

Front Seat Belt

(ELR type)

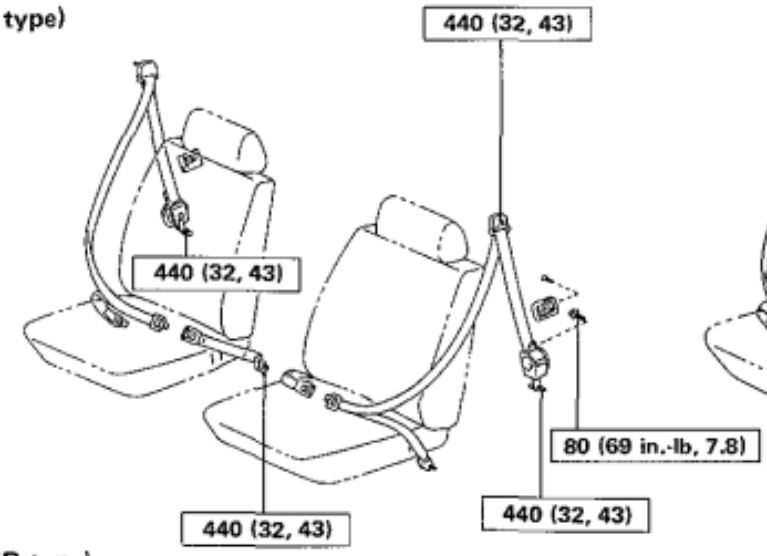

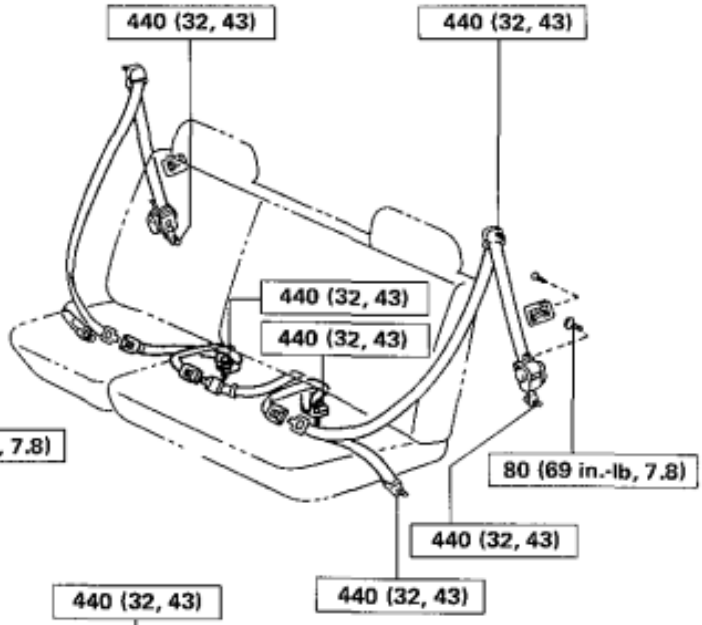

(NR type)

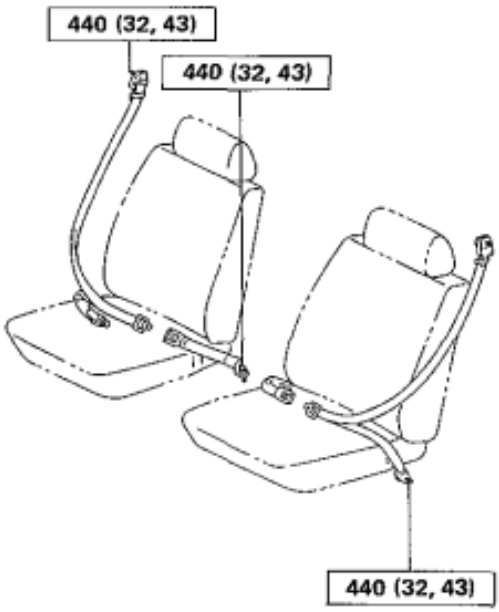

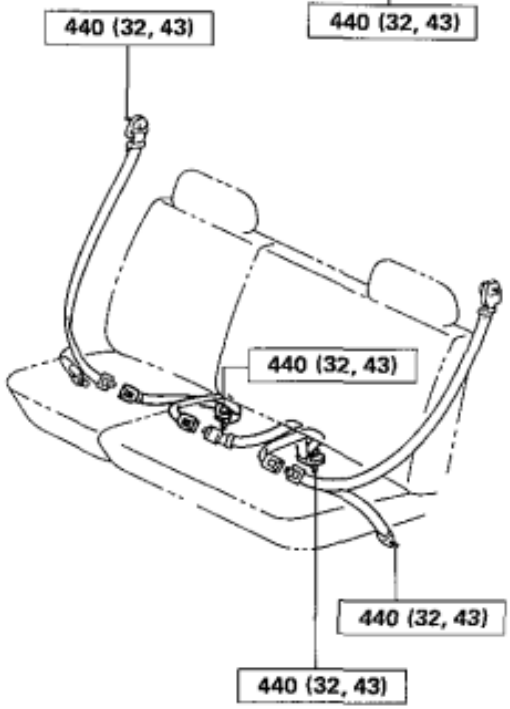

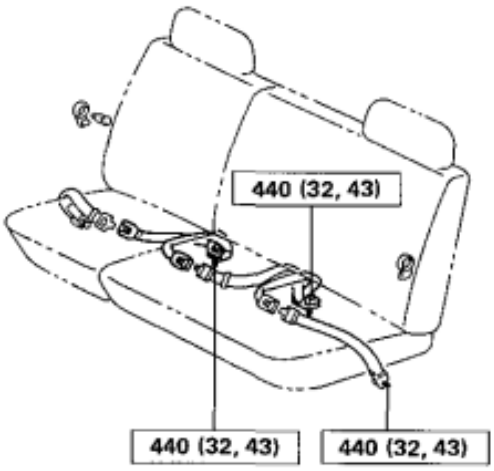

kg-cm (ft-lb, N·m) : Specified torque

BO5698

COMPONENTS (Cont'd)

Rear Seat Belt

(ELR type)

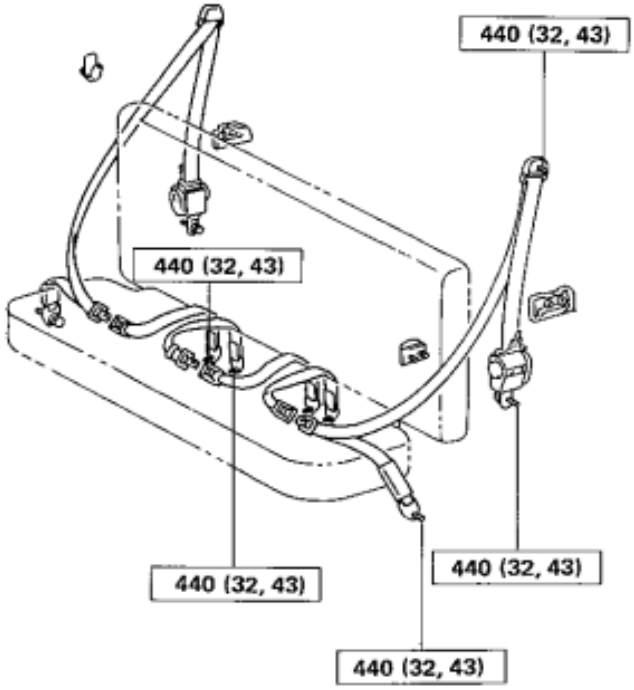

(NR type)

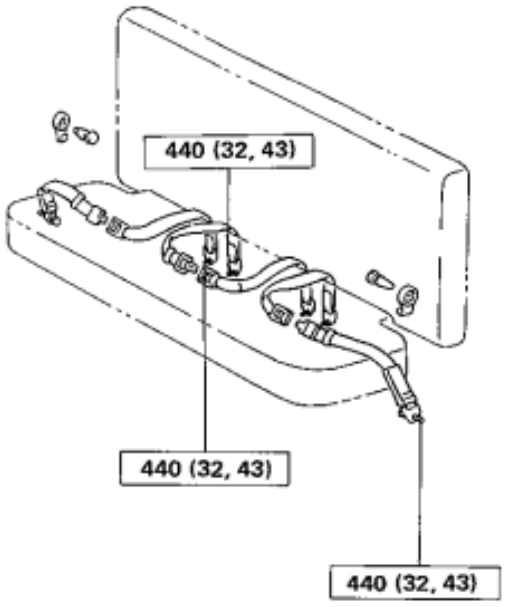

[Parallel Seat]

(NR type)

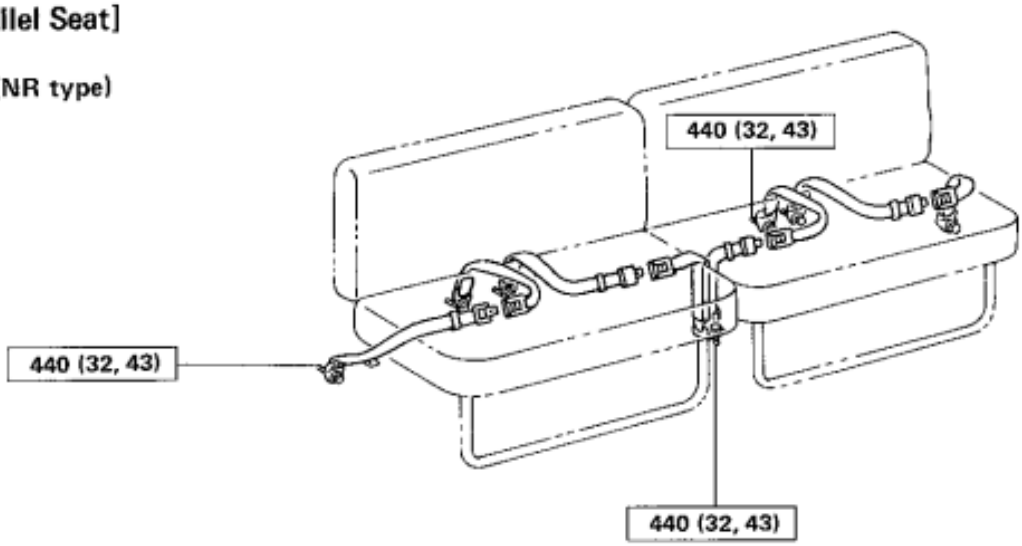

kg-cm (ft-lb, N·m) : Specified torque

BO5701
BO1123

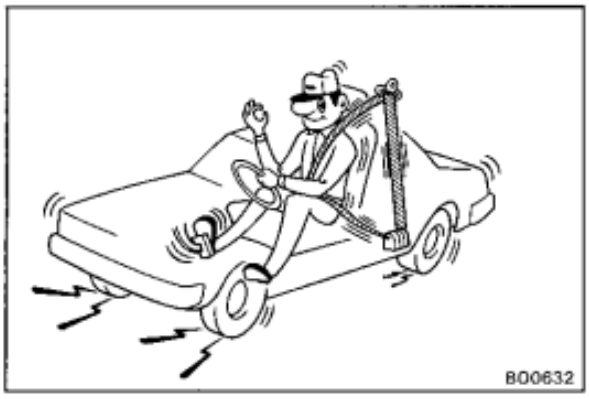

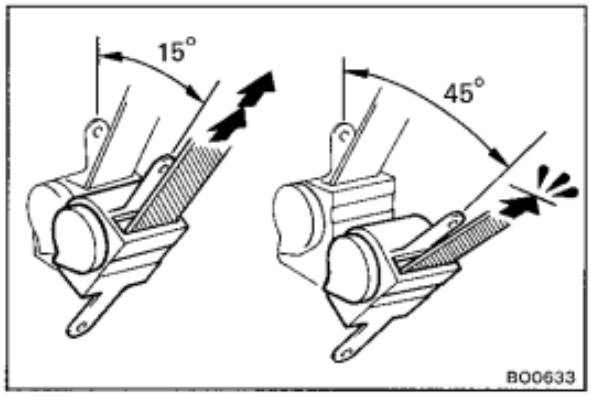

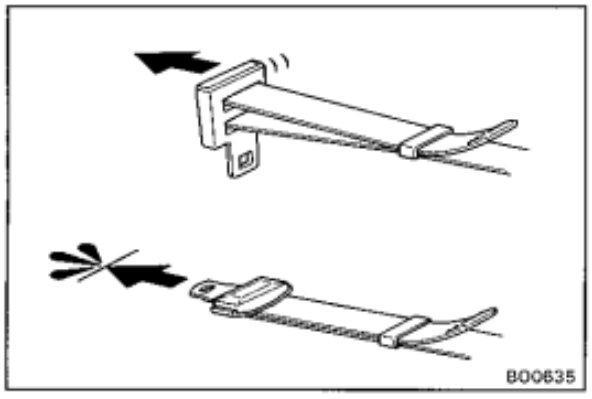

SEAT BELTS

[Emergency Locking Retractor (ELR) Type]

1. RUNNING TEST (IN SAFETY AREA)

(a) Fasten the seat belt.

(b) Drive the car at 10 mph (16 km/h) and make a very hard stop.

(c) Check that the seat belt is locked and cannot be extended at this time.

HINT: Conduct this test in safe area. If the belt does not lock, remove the belt mechanism assembly and conduct the following static check. Also, whenever installing a new belt assembly, verify the proper operation before installation.

2. STATIC TEST

(a) Remove the locking retractor assembly.

(b) Tilt the retractor slowly.

(c) Verify that the belt can be pulled out at a tilt of 15 degrees or less, and cannot be pulled out at over 45 degrees of tilt.

If a problem is found, replace assembly.

(Manual Type)

TESTING

(a) Adjust the belt to the proper length.

(b) Apply a firm load to the belt.

(c) Verify that the belt does not extend.

FUEL TANK AND LINE

COMPONENTS

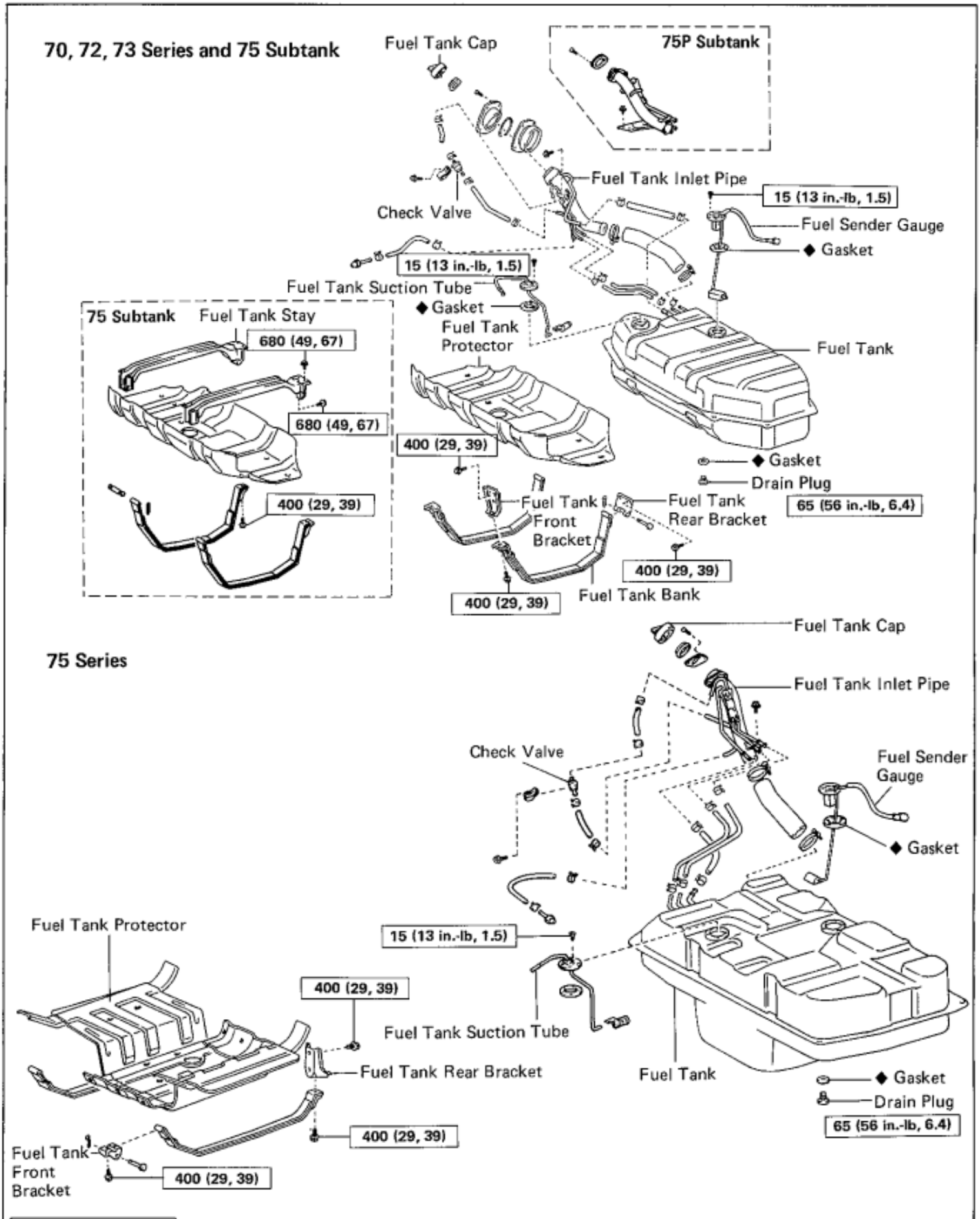

kg-cm (ft-lb, N·m) : Specified torque

◆ Non-reusable part

BO5719
BO5720

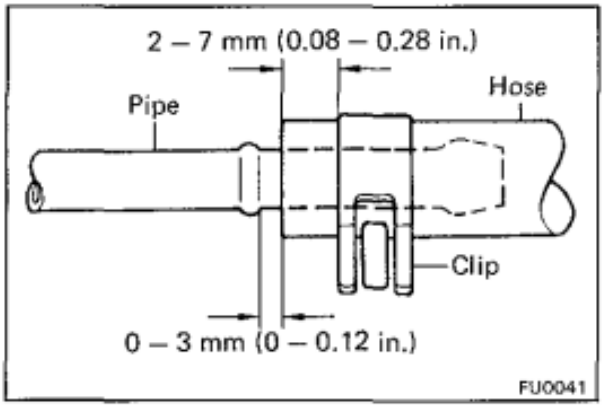

PRECAUTIONS

1. **Always use new gaskets when replacing the fuel tank or component parts.**

2. **Apply the proper torque to all tightening parts.**

INSPECT FUEL LINES AND CONNECTIONS

(a) Inspect the fuel lines and connections for cracks, leakage or deformation.

(b) Inspect the fuel tank vapor vent system hoses and connections for looseness, kinks, or damage.

(c) Inspect the fuel tank for deformation, cracks, fuel leakage or tank mount bolts looseness.

(d) Inspect the filler neck for damage or fuel leakage.

(e) Hose and tube connections are as shown in the illustration.

If problem is found, repair or replace the parts as necessary.

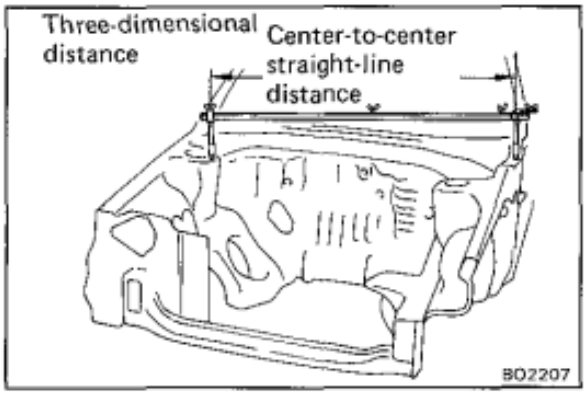

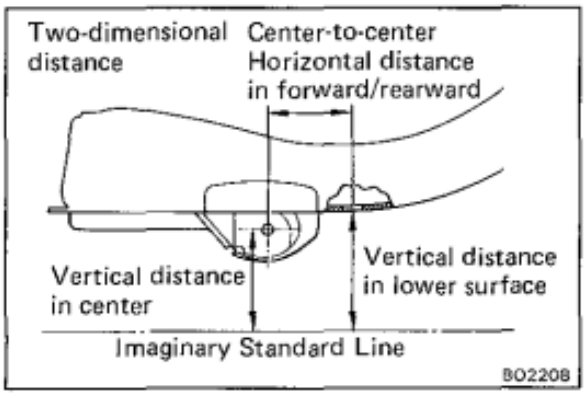

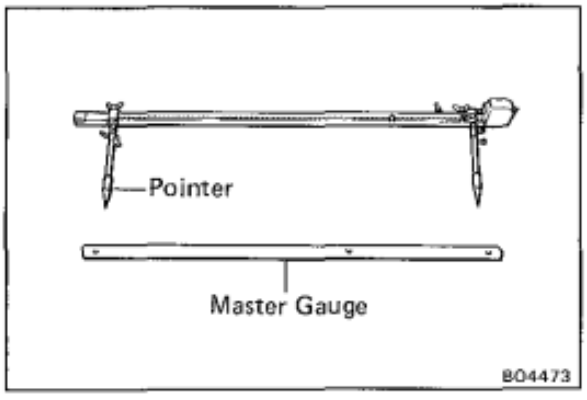

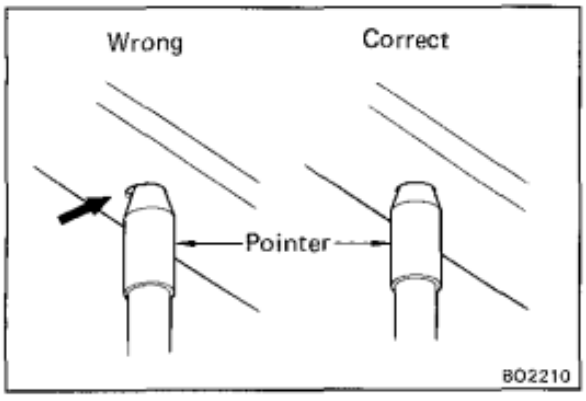

FRAME DIMENSIONS

General Information

1. BASIC DIMENSIONS

(a) There are two types of dimensions in the diagram.

(Three-dimensional distance)
- Straight-line distance between the centers of two measuring points.

(Two-dimensional distance)
- Horizontal distance in forward/rearward between the centers of two measuring points.
- The height from an imaginary standard line.

(b) In cases in which only one dimension is given, left and right are symmetrical.

(c) The dimensions in the following drawing indicate actual distance. Therefore, please use the dimensions as a reference.

2. MEASURING

(a) Basically, all measurements are to be done with a tracking gauge. For portions where it is not possible to use a tracking gauge, a tape measure should be used.

(b) Use only a tracking gauge that has on looseness in the body, measuring plate, or pointers.

HINT:

1. The height of the left and right pointers must be equal.
2. Always calibrate the tracking gauge before measuring or after adjusting the pointer height.
3. Take care not to drop the tracking gauge or otherwise shock it.
4. Confirm that the pointers are securely in the holes.

Frame Dimensions

THREE-DIMENSIONAL DISTANCE (RJ70, LJ70, LJ72 Series)

mm (in.)

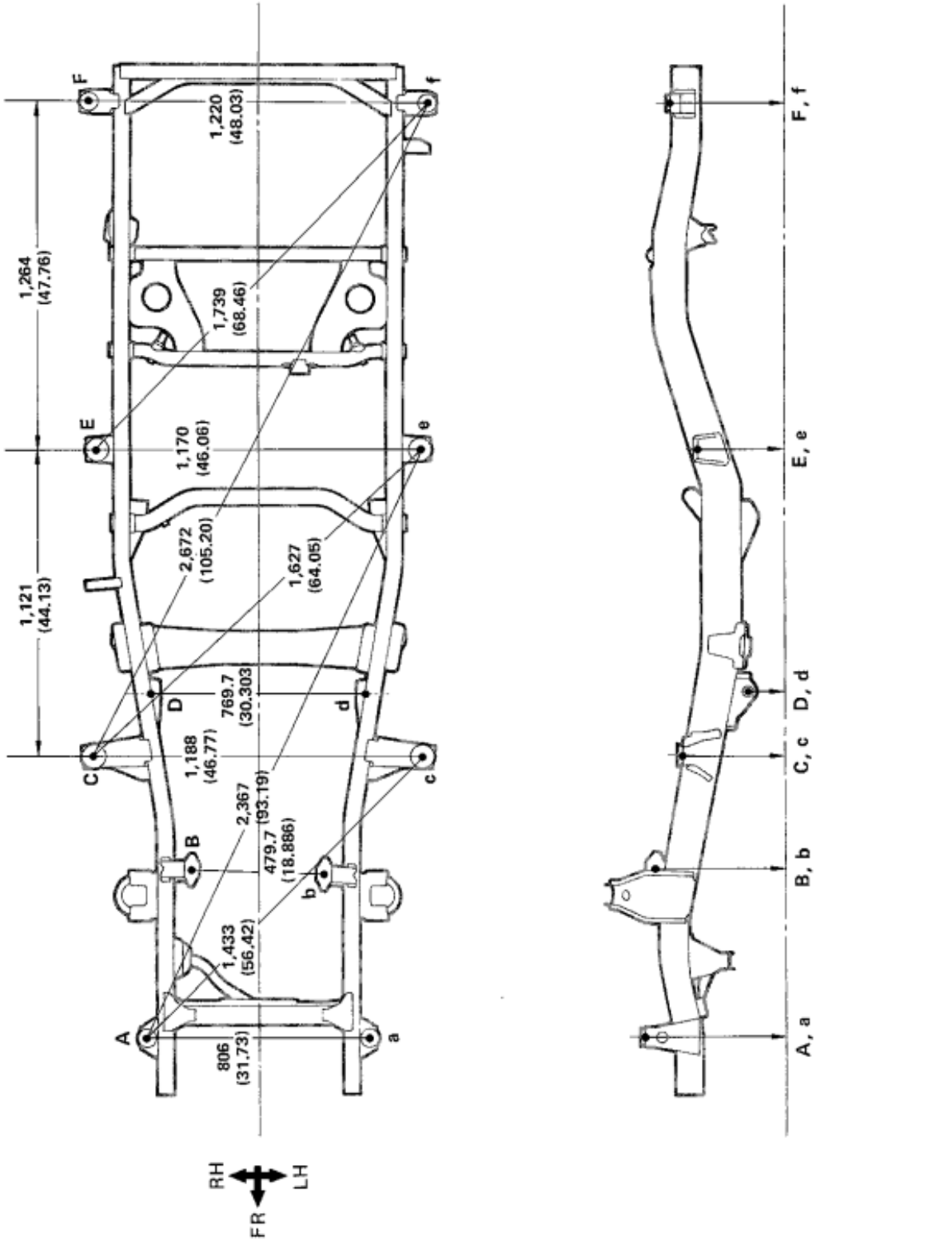

Symbol	Name	Hole dia.
A, a	Body mounting hole	24 (0.94)
B, b	Engine mounting hole	30 (1.18)
C, c	Body mounting hole	24 (0.94)

Symbol	Name	Hole dia.
D, d	Lower arm installation hole	18 (0.71)
E, e	Body mounting hole	24 (0.94)
F, f	Body mounting hole	24 (0.94)

BO5746

TWO-DIMENSIONAL DISTANCE (RJ70, LJ70, LJ72 Series)

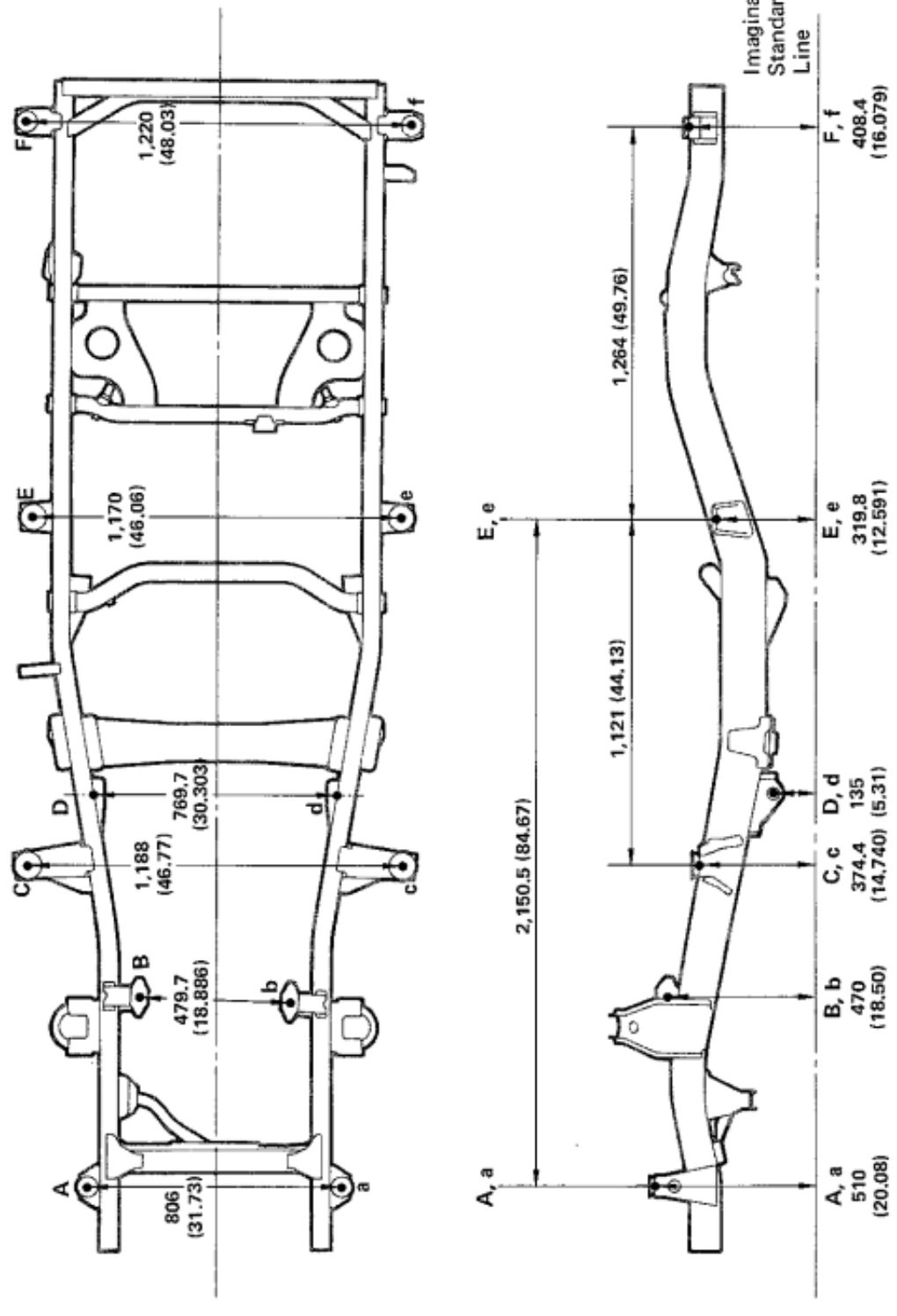

mm (in.)

Wheel base	2,310 (90.94)

Symbol	Name	Hole dia.
A, a	Body mounting hole	24 (0.94)
B, b	Engine mounting hole	30 (1.18)
C, c	Body mounting hole	24 (0.94)

Symbol	Name	Hole dia.
D, d	Lower arm installation hole	18 (0.71)
E, e	Body mounting hole	24 (0.94)
F, f	Body mounting hole	24 (0.94)

THREE-DIMENSIONAL DISTANCE (LJ73, RJ73 Series)

mm (in.)

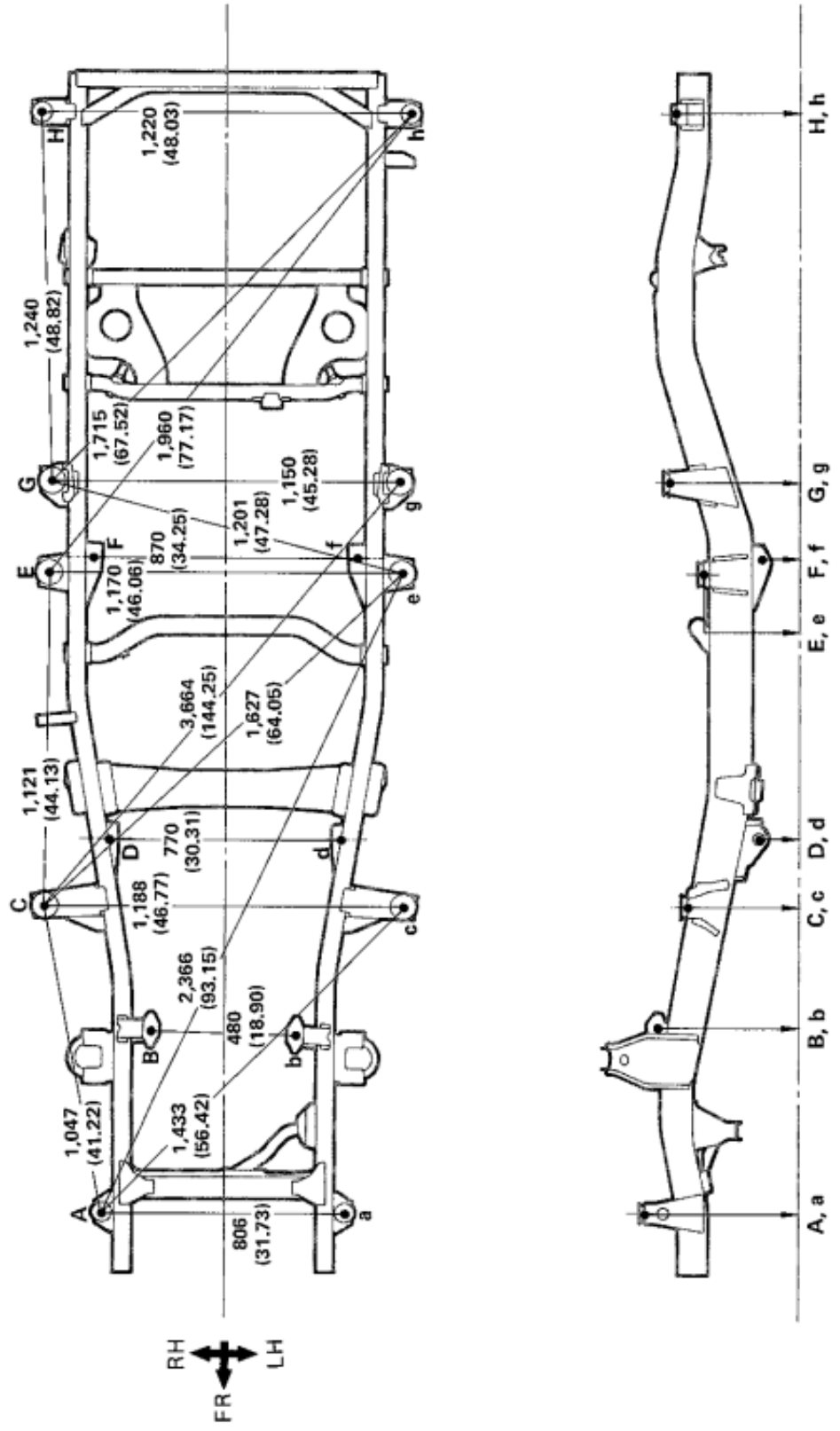

BO5745

Symbol	Name	Hole dia.	Symbol	Name	Hole dia.
A, a	Body mounting hole	24 (0.94)	E, e	Body mounting hole	24 (0.94)
B, b	Engine mounting hole	30 (1.18)	F, f	Lower arm installation hole	18 (0.71)
C, c	Body mounting hole	24 (0.94)	G, g	Body mounting hole	24 (0.94)
D, d	Lower arm installation hole	18 (0.71)	H, h	Body mounting hole	24 (0.94)

TWO-DIMENSIONAL DISTANCE (LJ73, RJ73 Series)

mm (in.)

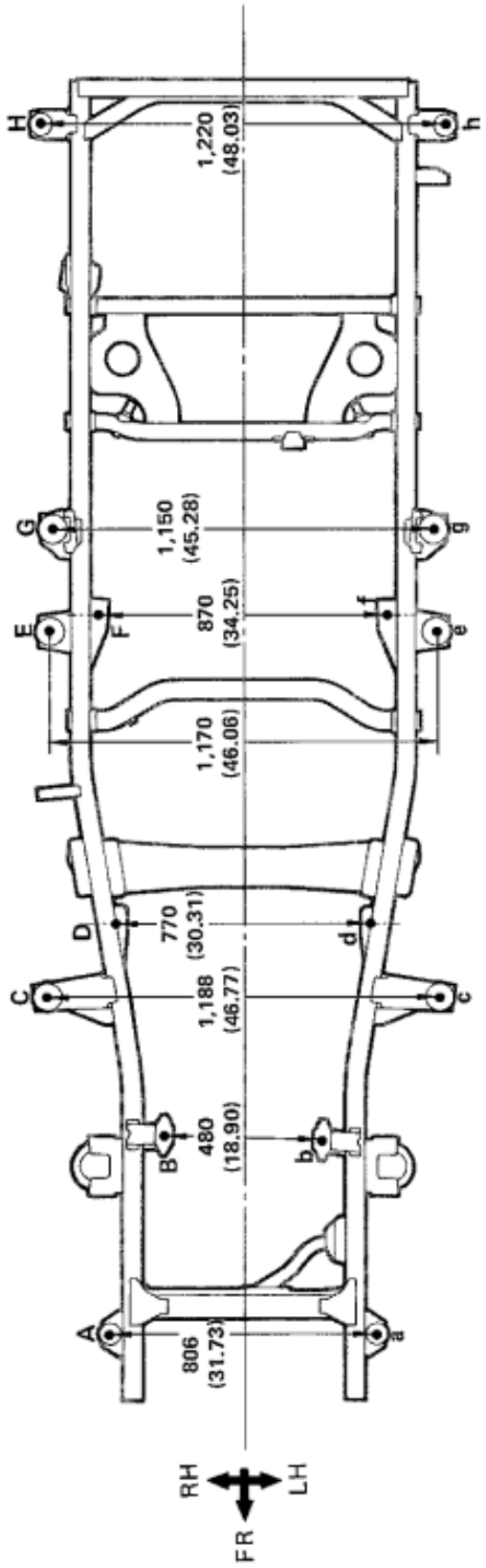

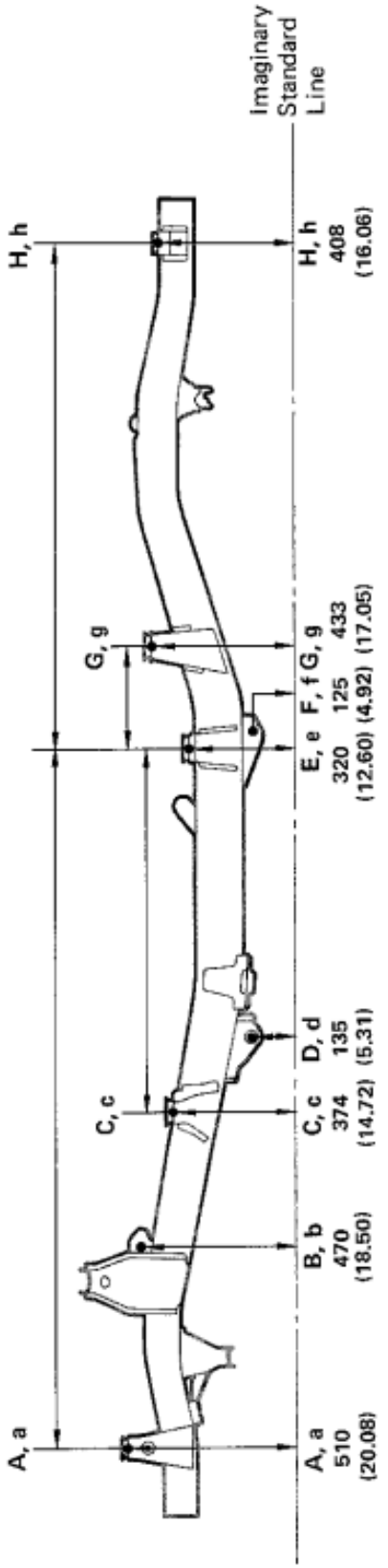

Wheel base	2,600 (102.36)

Symbol	Name	Hole dia.	Symbol	Name	Hole dia.
A, a	Body mounting hole	24 (0.94)	E, e	Body mounting hole	24 (0.94)
B, b	Engine mounting hole	30 (1.18)	F, f	Lower arm installation hole	18 (0.71)
C, c	Body mounting hole	24 (0.94)	G, g	Body mounting hole	24 (0.94)
D, d	Lower arm installation hole	18 (0.71)	H, h	Body mounting hole	24 (0.94)

BO5745

THREE-DIMENSIONAL DISTANCE (FJ70, PZJ70, HZJ70 Series)

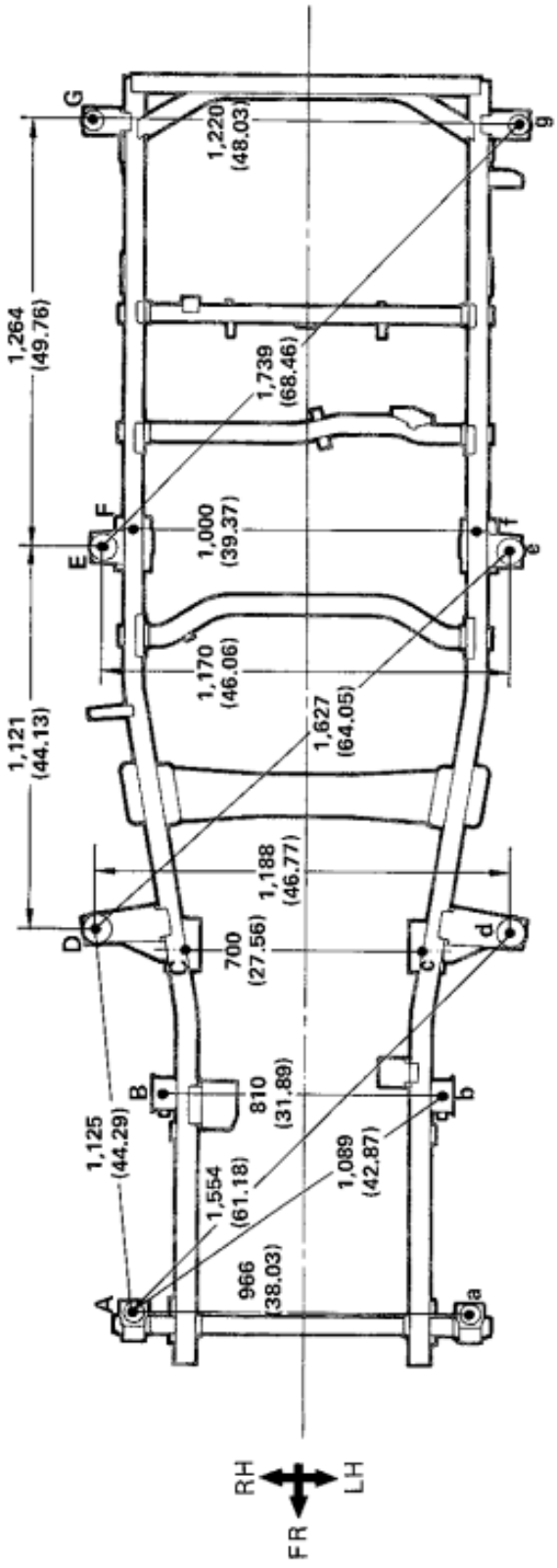

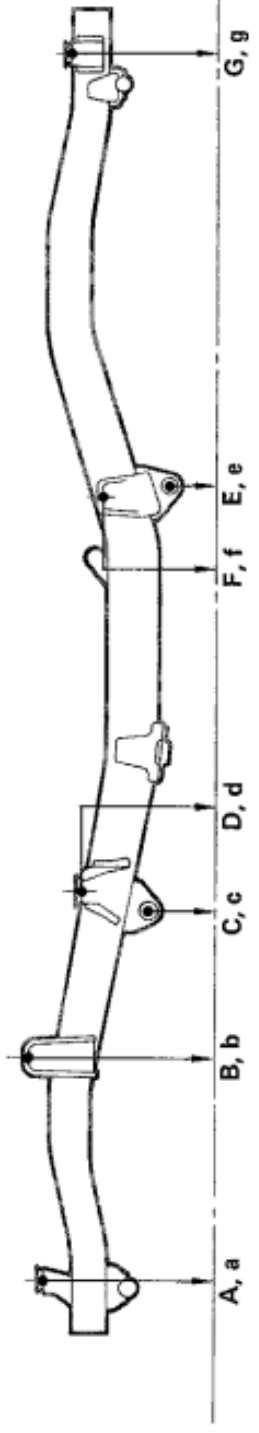

mm (in.)

Symbol	Name	Hole dia.	Symbol	Name	Hole dia.
A, a	Body mounting hole	24 (0.94)	E, e	Body mounting hole	24 (0.94)
B, b	Shock absorber installation hole	16 (0.63)	F, f	No. 3 spring bracket installation hole	14 (0.55)
C, c	No. 2 spring braket installation hole	14 (0.55)	G, g	Body mounting hole	24 (0.94)
D, d	Body mounting hole	24 (0.94)	—	—	—

BO5750

TWO-DIMENSIONAL DISTANCE (FJ70, PZJ70, HZJ70 Series)

mm (in.)

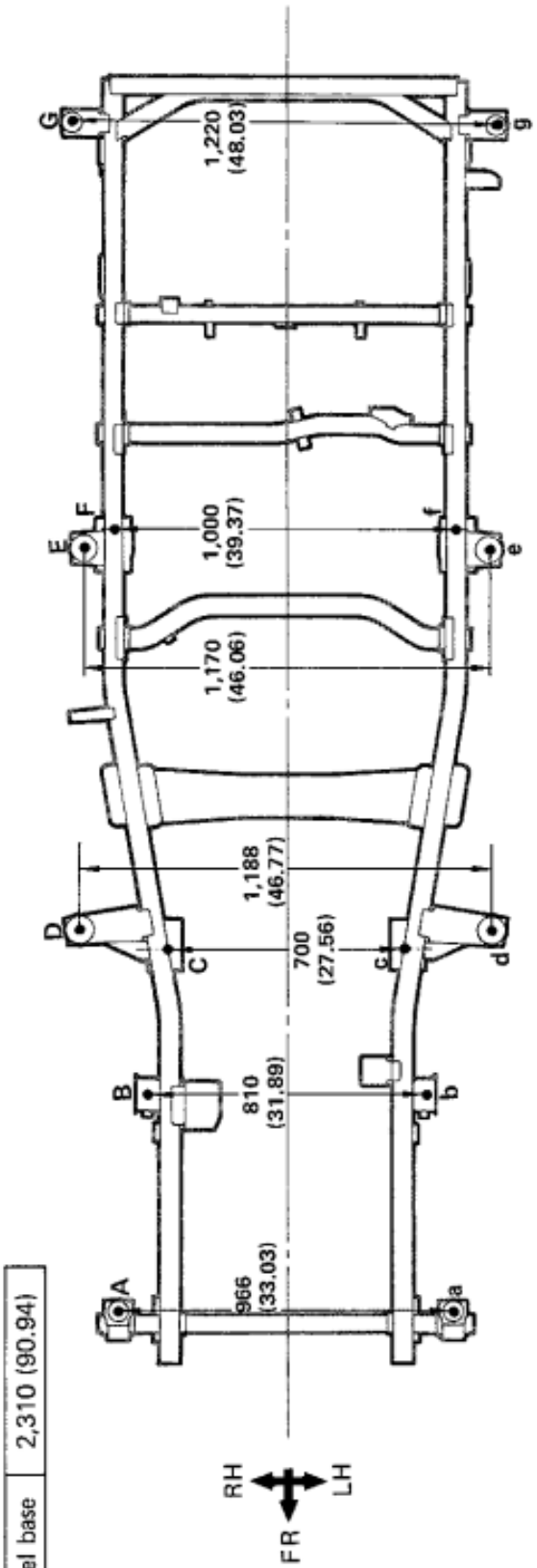

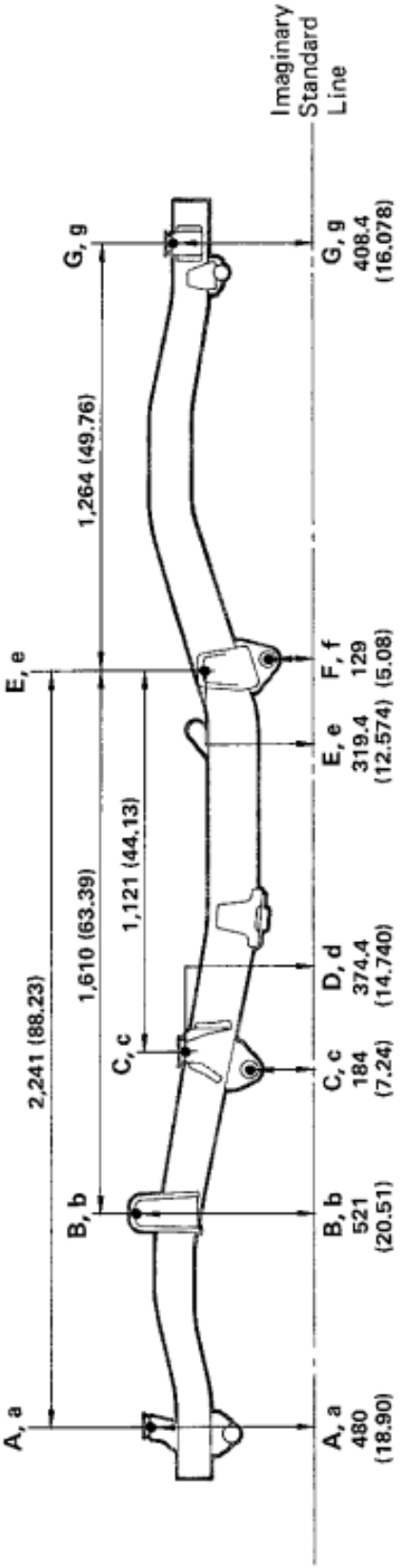

Symbol	Name	Hole dia.	Symbol	Name	Hole dia.
A, a	Body mounting hole	24 (0.94)	E, e	Body mounting hole	24 (0.94)
B, b	Shock absorber installation hole	16 (0.63)	F, f	No. 3 spring bracket installation hole	14 (0.55)
C, c	No. 2 spring bracket installation hole	14 (0.55)	G, g	Body mounting hole	24 (0.94)
D, d	Body mounting hole	24 (0.94)	—	—	—

BO5750

THREE-DIMENSIONAL DISTANCE (FJ73, PZJ73, HZJ73 Series)

mm (in.)

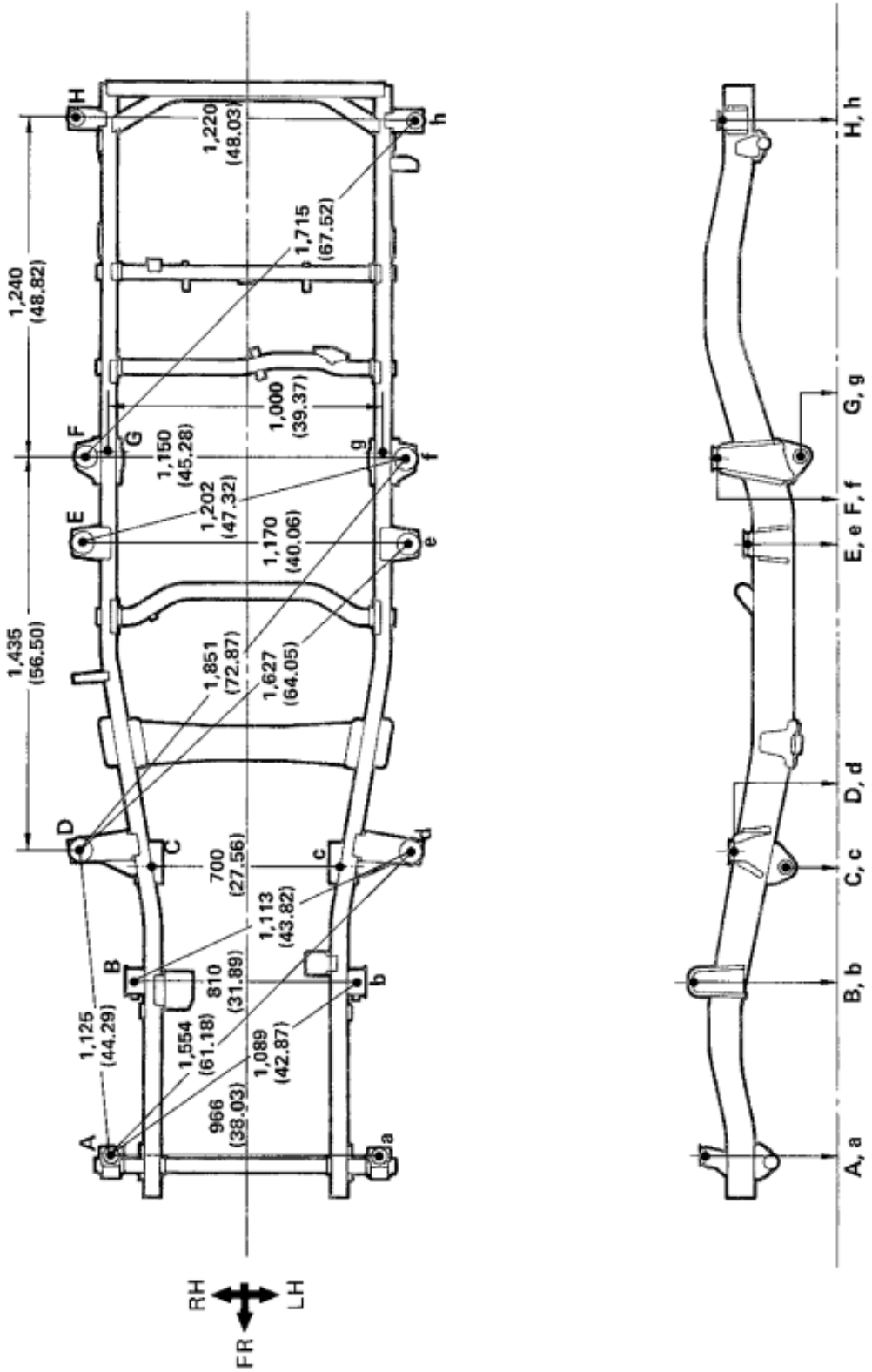

Symbol	Name	Hole dia.
A, a	Body mounting hole	24 (0.94)
B, b	Shock absorber installation hole	16 (0.63)
C, c	No. 2 spring bracket	14 (0.55)
D, d	Body mounting hole	24 (0.94)

Symbol	Name	Hole dia.
E, e	Body mounting hole	24 (0.94)
F, f	No. 3 spring bracket	14 (0.55)
G, g	Body mounting hole	24 (0.94)
H, h	Body mounting hole	24 (0.94)

BO5747

TWO-DIMENSIONAL DISTANCE (FJ73, PZJ73, HZJ73 Series)

mm (in.)

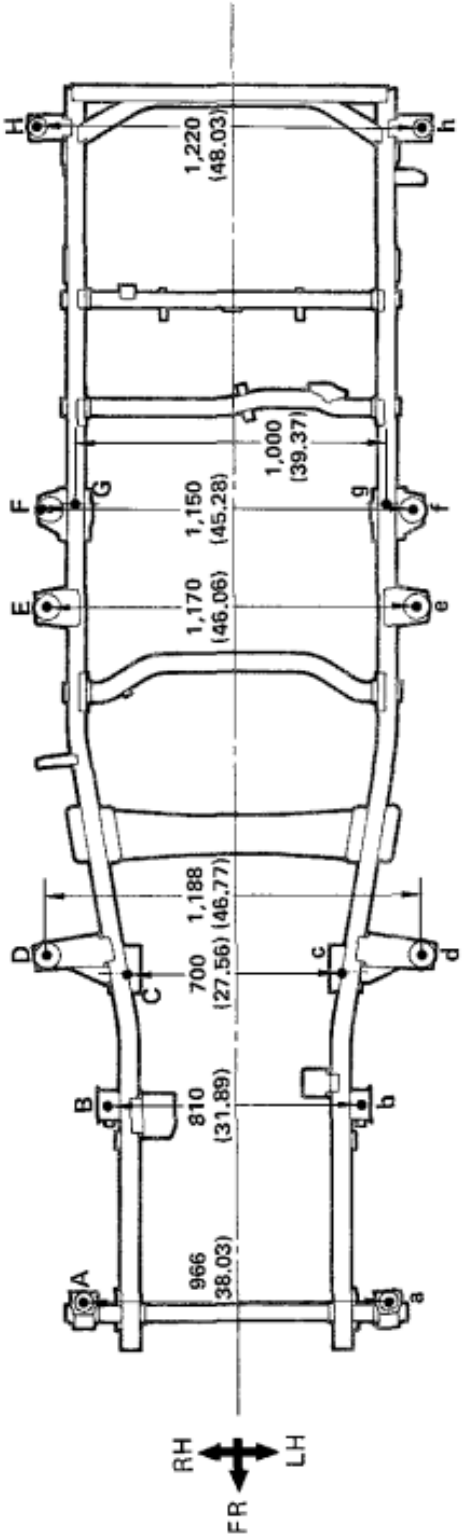

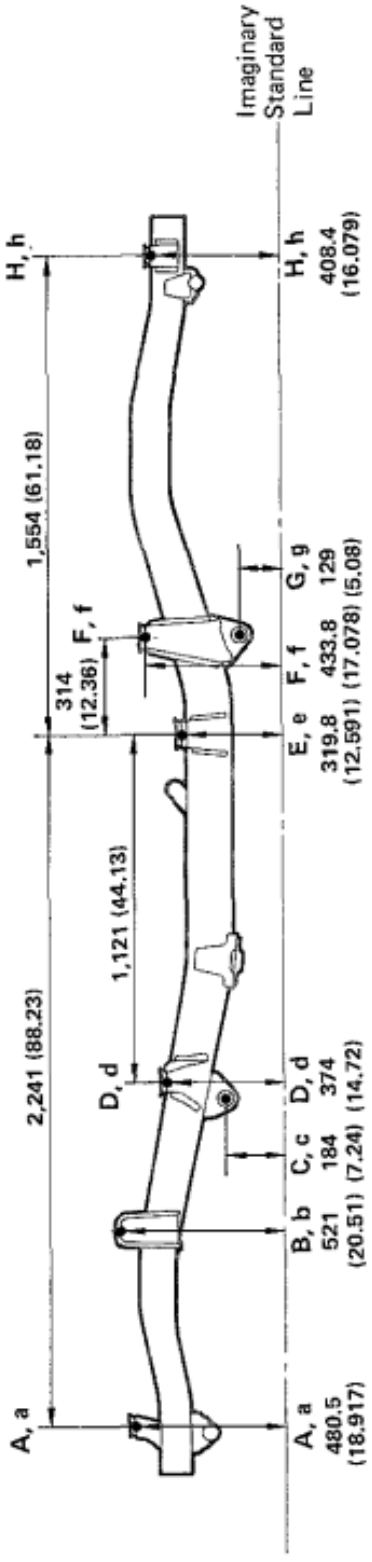

Wheel base | 2,600 (102.36)

Symbol	Name	Hole dia.	Symbol	Name	Hole dia.
A, a	Body mounting hole	24 (0.94)	E, e	Body mounting hole	24 (0.94)
B, b	Shock absorber installation hole	16 (0.63)	F, f	No. 3 spring bracket	14 (0.55)
C, c	No. 2 spring bracket	14 (0.55)	G, g	Body mounting hole	24 (0.94)
D, d	Body mounting hole	24 (0.94)	H, h	Body mounting hole	24 (0.94)

BO5747

THREE-DIMENSIONAL DISTANCE (FJ75, PZJ75, HZJ75 Series)

- Hardtop, FRP Top Type

mm (in.)

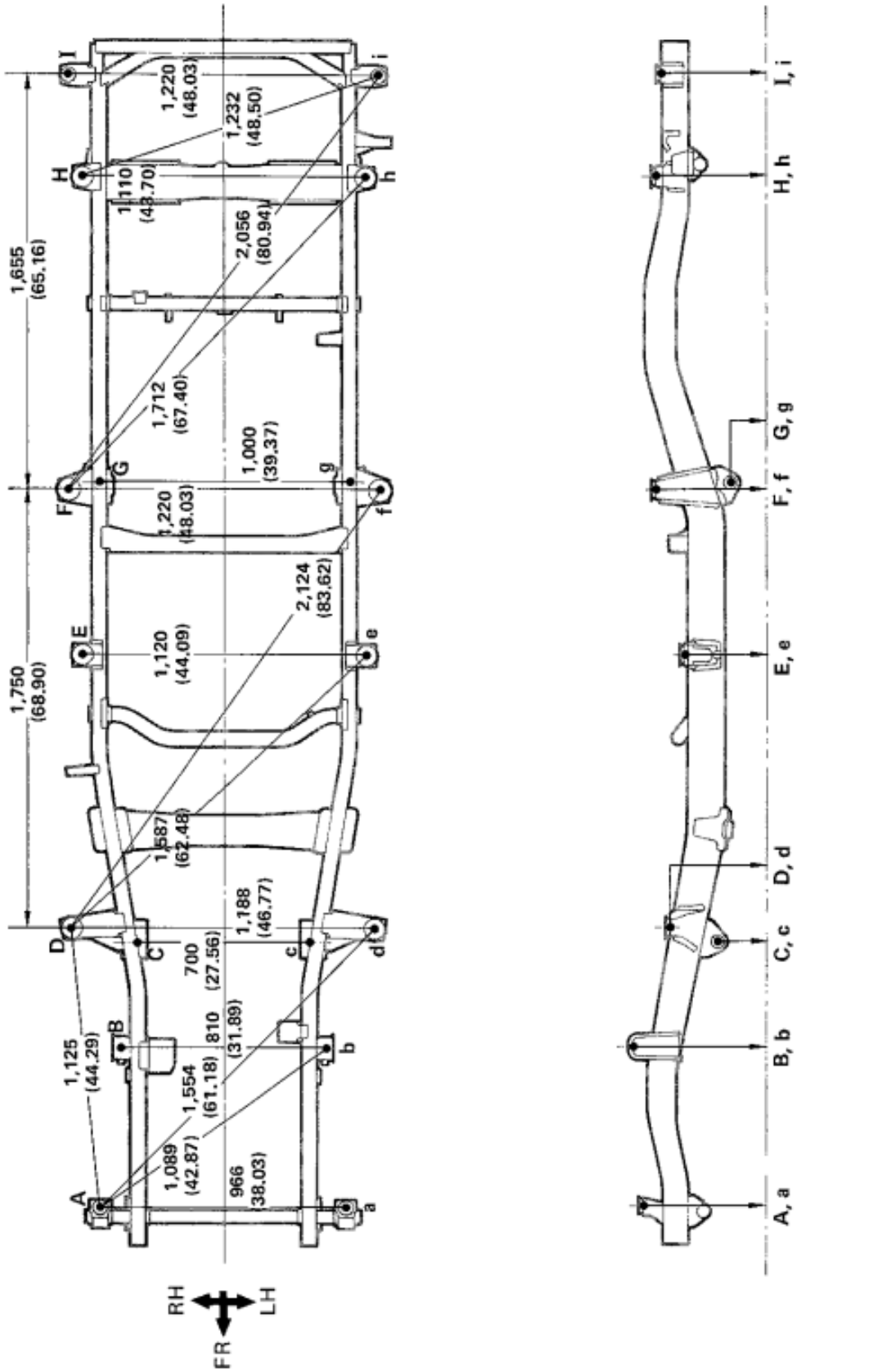

Symbol	Name	Hole dia.	Symbol	Name	Hole dia.
A, a	Body mounting hole	24 (0.94)	F, f	Body mounting hole	24 (0.94)
B, b	Shock absorber installation hole	16 (0.63)	G, g	No. 3 spring bracket	14 (0.55)
C, c	No. 2 spring bracket	14 (0.55)	H, h	Body mounting hole	24 (0.94)
D, d	Body mounting hole	24 (0.94)	I, i	Body mounting hole	24 (0.94)
E, e	Body mounting hole	24 (0.94)	—	—	—

BO5749

TWO-DIMENSIONAL DISTANCE (FJ75, PZJ75, HZJ75 Series)

- **Hardtop, FRP Top Type**

mm (in.)

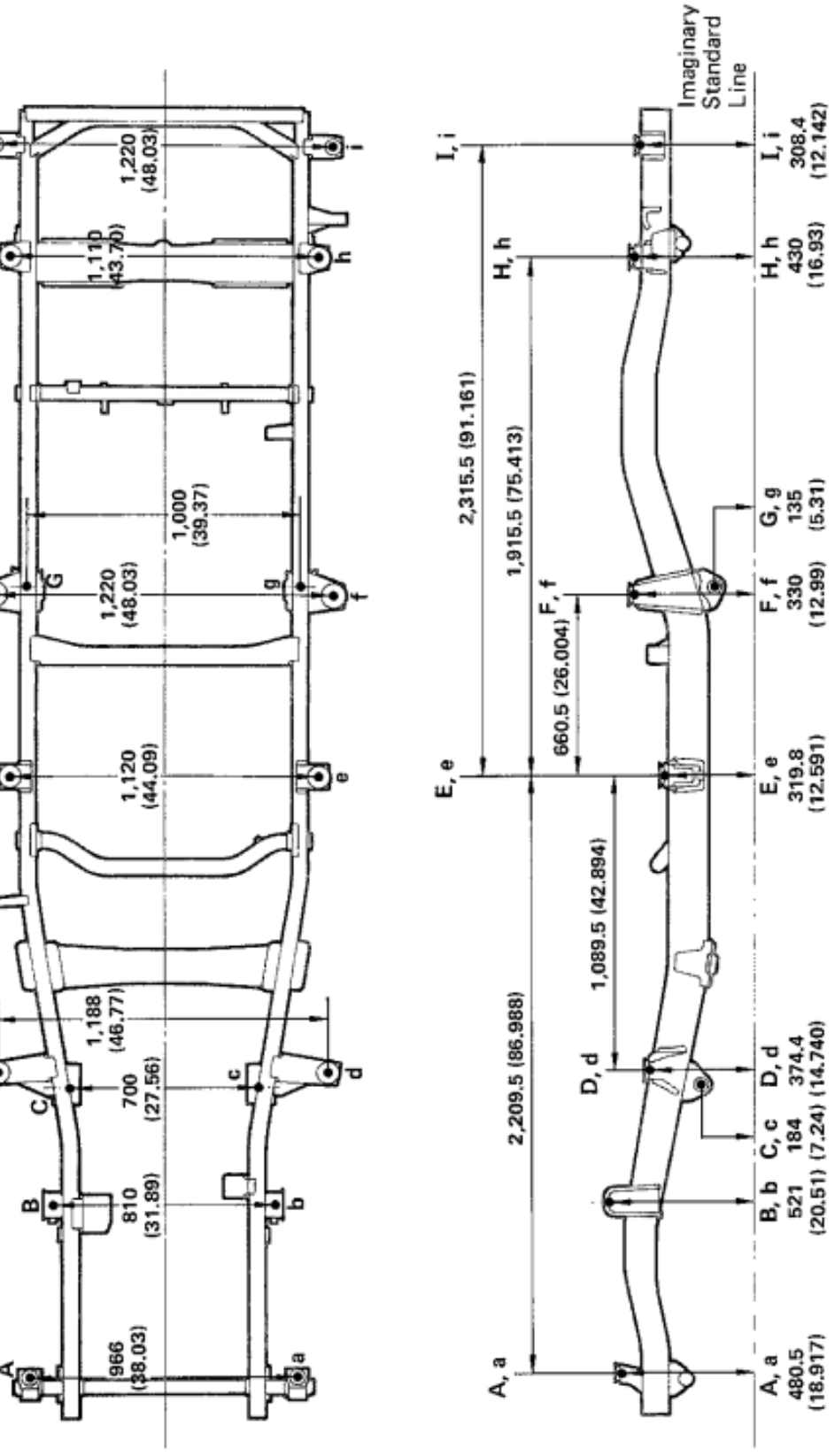

Wheel base	2,980 (117.32)

Symbol	Name	Hole dia.	Symbol	Name	Hole dia.
A, a	Body mounting hole	24 (0.94)	F, f	Body mounting hole	24 (0.94)
B, b	Shock absorber installation hole	16 (0.63)	G, g	No. 3 spring bracket	14 (0.55)
C, c	No. 2 spring bracket	14 (0.55)	H, h	Body mounting hole	24 (0.94)
D, d	Body mounting hole	24 (0.94)	I, i	Body mounting hole	24 (0.94)
E, e	Body mounting hole	24 (0.94)	—	—	—

BO5749

THREE-DIMENSIONAL DISTANCE (FJ75, PZJ75, HZJ75 Series)

- **Pickup Type**

mm (in.)

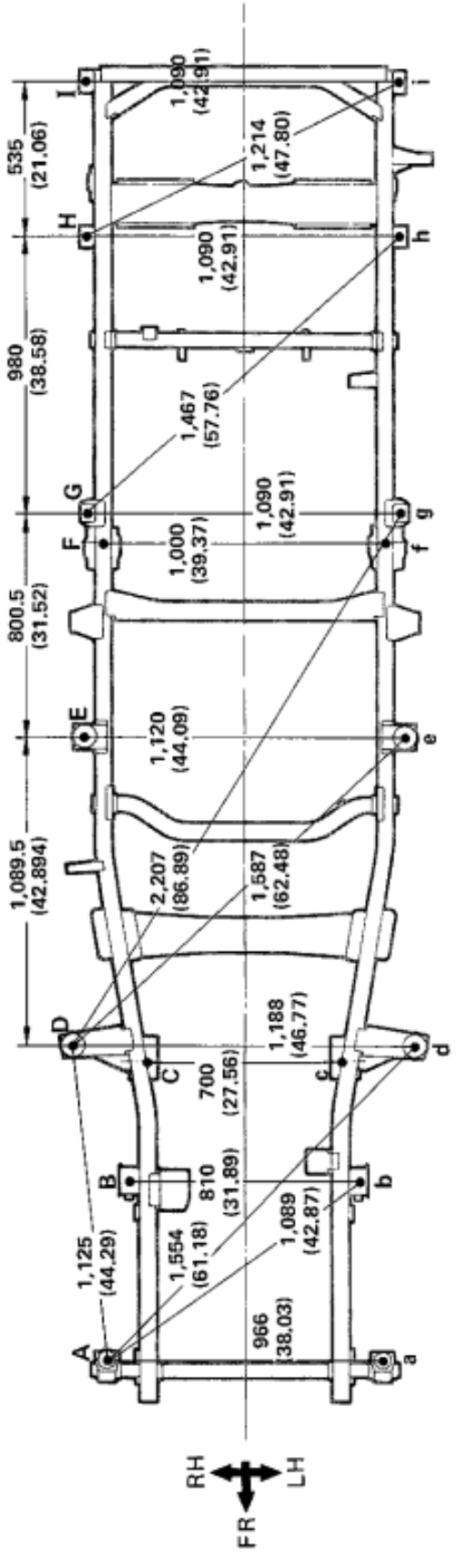

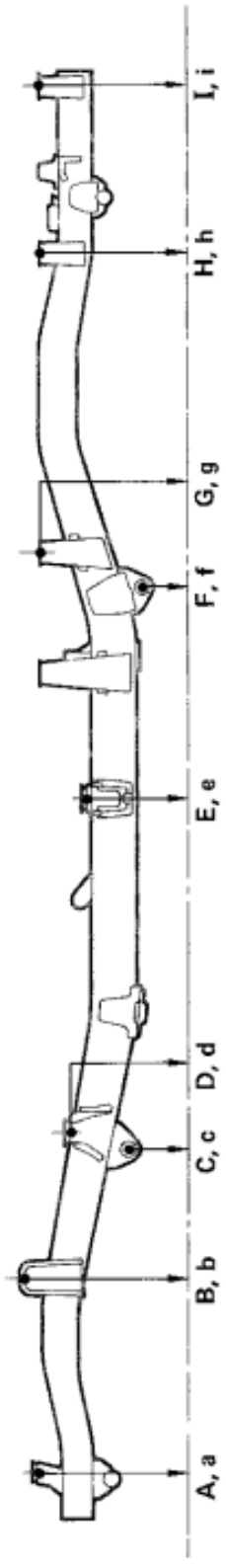

BO5748

Symbol	Name	Hole dia.	Symbol	Name	Hole dia.
A, a	Body mounting hole	24 (0.94)	F, f	No. 3 spring bracket	14 (0.55)
B, b	Shock absorber installation hole	16 (0.63)	G, g	No. 2 rear body mounting hole	15 (0.59)
C, c	No. 2 spring bracket	14 (0.55)	H, h	No. 6 body support bracket	15 (0.59)
D, d	Body mounting hole	24 (0.94)	I, i	No. 6 body support bracket	15 (0.59)
E, e	Body mounting hole	24 (0.94)	—	—	—

TWO-DIMENSIONAL DISTANCE (FJ75, PZJ75, HZJ75 Series)

- **Pickup Type**

mm (in.)

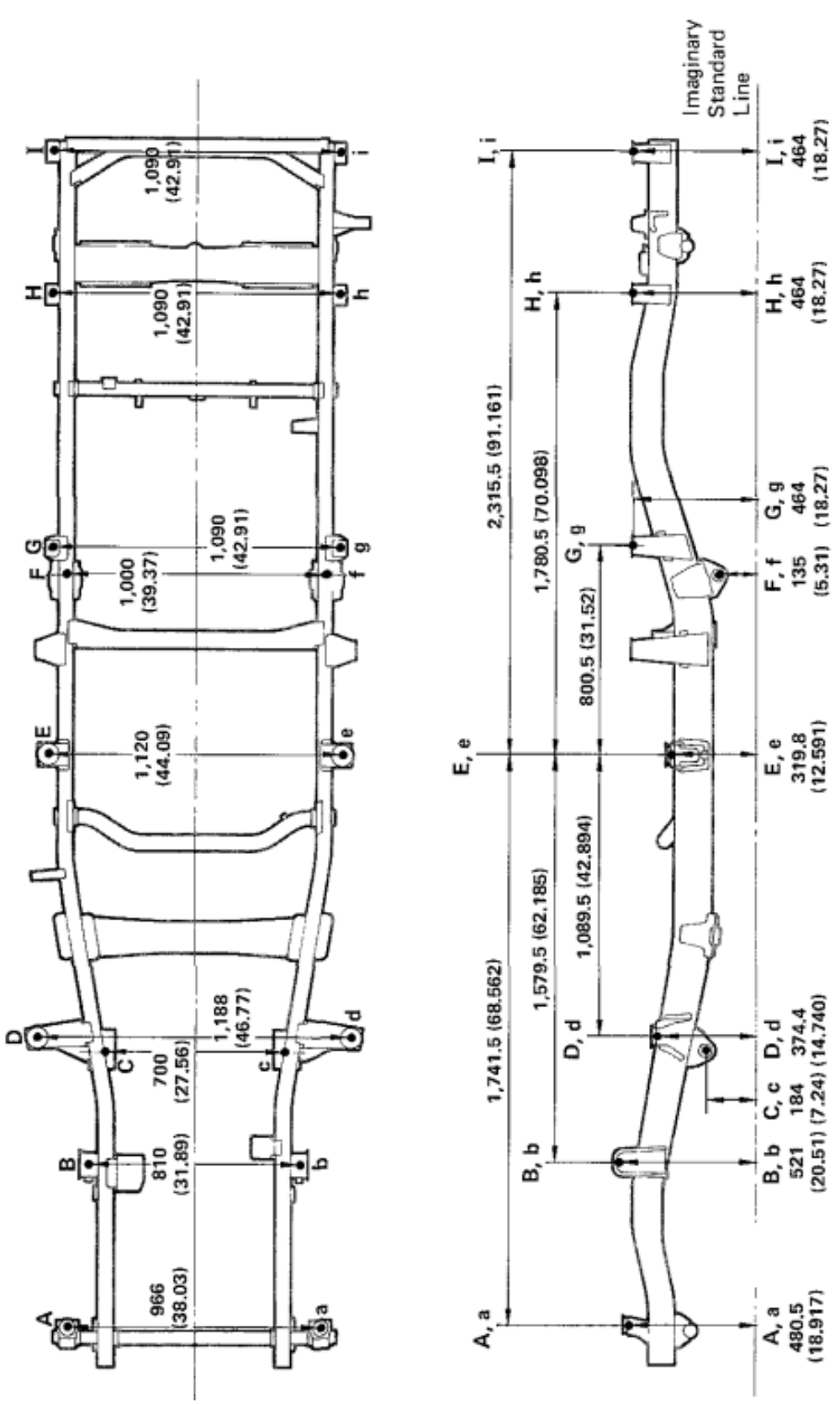

Wheel base | 2,980 (117.32)

Symbol	Name	Hole dia.	Symbol	Name	Hole dia.
A, a	Body mounting hole	24 (0.94)	F, f	No. 3 spring bracket	14 (0.55)
B, b	Shock absorber installation hole	16 (0.63)	G, g	No. 2 rear body mounting hole	15 (0.59)
C, c	No. 2 spring bracket	14 (0.55)	H, h	No. 6 body support bracket	15 (0.59)
D, d	Body mounting hole	24 (0.94)	I, i	No. 6 body support bracket	15 (0.59)
E, e	Body mounting hole	24 (0.94)	–	–	–

BO5748

BODY

Torque Specifications

Part tightened		kg-cm	ft-lb	N·m
FRP Top				
FRP top set bolt	6 mm	80	69 in.-lb	7.8
	8 mm	120	9	12
Roll Bar				
Roll bar set bolt		440	32	43
Front Seat				
(70, 73, 75 series)				
Reclining seat adjuster × Seat back		530	38	52
Reclining seat adjuster × Seat cushion		530	38	52
Seat back × Seat cushion		195	14	19
Seat cushion × Seat track		260	19	25
Seat track × Body	w/o Seat suspension	400	29	39
Seat track × Seat suspension	w/ Seat suspension	400	29	39
Rear Bench Seat				
(70, 73, 75 series)				
Seat cushion lock × Seat leg	w/o Seat belt	260	19	25
	w/ Seat belt	420	30	41
Striker × Body		530	38	52
Seat cushion bracket × Seat cushion		530	38	52
Seat cushion bracket × Body		260	19	25
Seat back lock × Seat back		530	38	52
Seat back lock × Seat cushion		530	38	52
Strap set bolt		80	69 in.-lb	7.8
Rear Parallel Seat				
(70, 73, 75V series)				
Seat frame × Body		260	19	25
(75P series)				
Seat frame × Body		195	14	19
Seat Belt				
Seat belt anchor × Body		440	32	43
Fuel Tank and Line				
(70, 73, 75 series)				
Fuel sender gauge set screw		15	13 in.-lb	1.5
Fuel tank suction tube set screw		15	13 in.-lb	1.5
Fuel tank front bracket × Body		400	29	39
Fuel tank front bracket × Fuel tank band (70, 73 series)		400	29	39
Fuel tank rear bracket × Fuel tank band (75 series)		400	29	39
Fuel tank band × Fuel tank stay (75 series sub tank)		400	29	39
Fuel tank rear bracket × Body		400	29	39
Drain plug		65	56 in.-lb	6.4

MECHANICAL WINCH

Power Take-Off (P.T.O.)

COMPONENTS

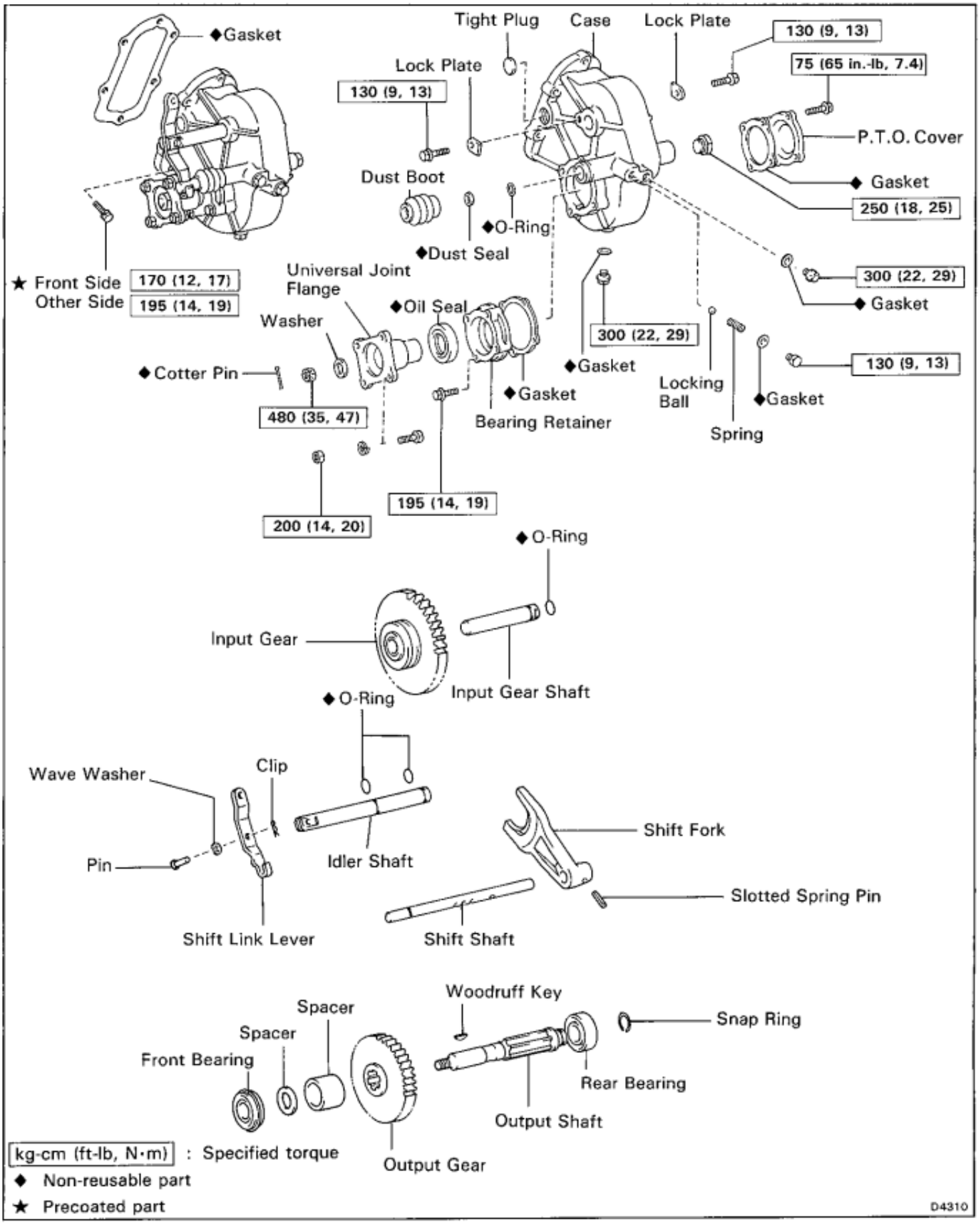

REMOVAL OF P.T.O.

(See page WI-2)

1. DRAIN P.T.O. OIL

Remove the drain plug and drain the oil.

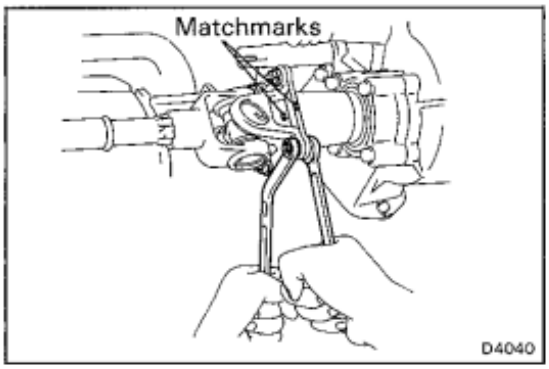

2. DISCONNECT P.T.O. DRIVE SHAFT

(a) Place matchmarks on the flange of P.T.O. and yoke of drive shaft.

(b) Remove the four bolts and nuts and disconnect the drive shaft.

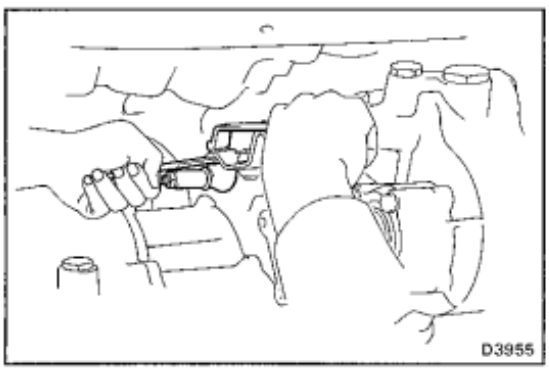

3. DISCONNECT P.T.O. SHIFT ROD

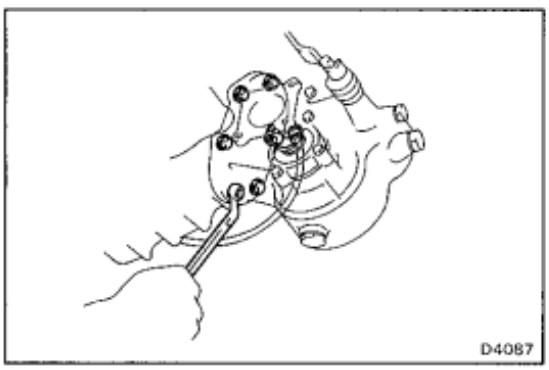

4. REMOVE P.T.O. FROM TRANSMISSION

(a) Remove the six bolts.

(b) Light tap the P.T.O. case, and then remove the P.T.O. assembly and gasket.

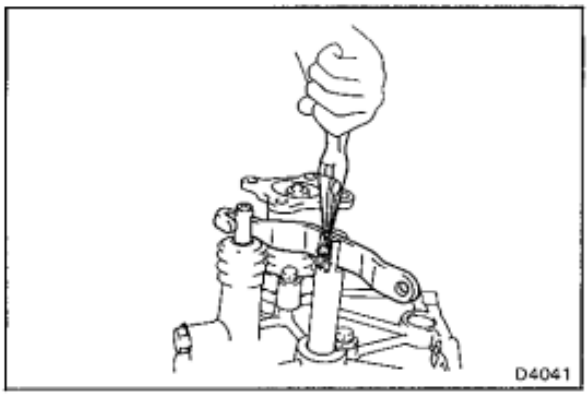

DISASSEMBLY OF P.T.O.

(See page WI-2)

1. REMOVE SHIFT LINK LEVER

Remove the clip, wave washer, pin and shift link lever.

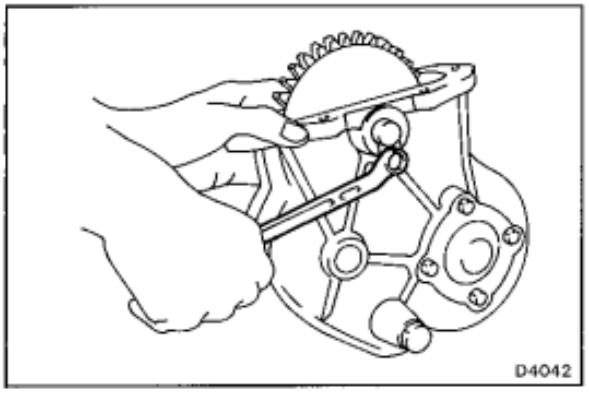

2. REMOVE INPUT GEAR AND SHAFT

(a) Remove the lock plate.

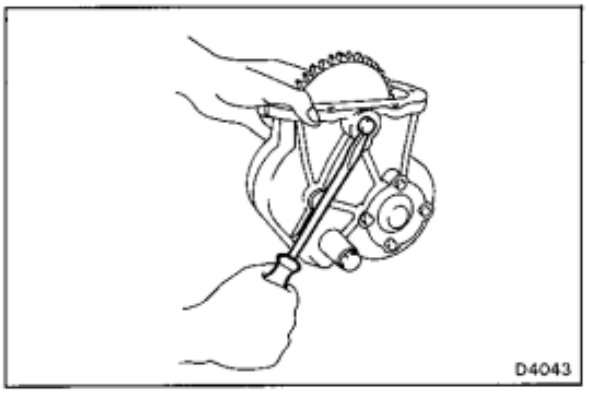

(b) Using a screwdriver, remove the input gear shaft, and remove the input gear.

(c) Remove the O-ring from the shaft.

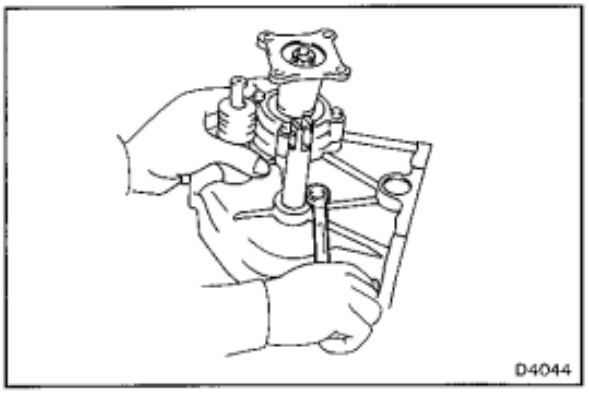

3. REMOVE IDLER SHAFT

(a) Remove the lock plate.

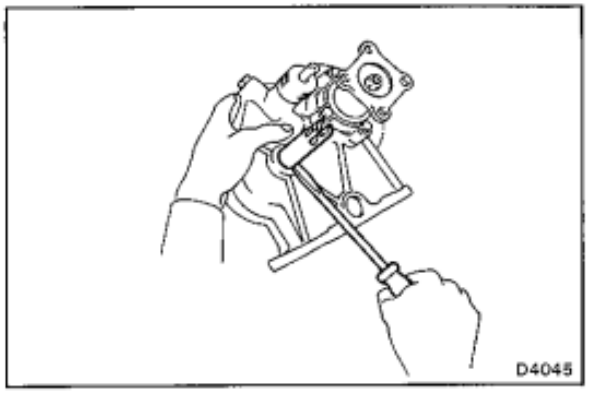

(b) Using a screwdriver, remove the idler shaft.

(c) Remove the two O-rings from the shaft.

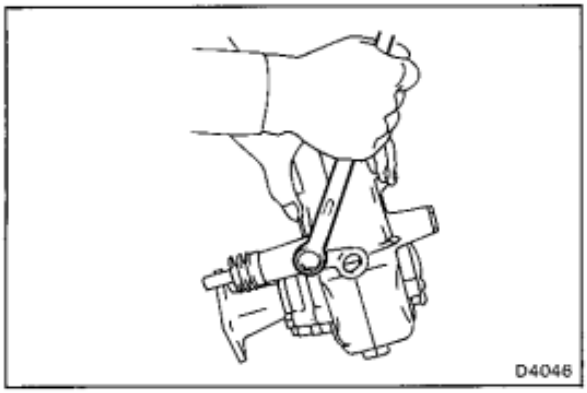

4. REMOVE SHIFT SHAFT AND FORK

(a) Remove the locking ball bolt and gasket.

(b) Remove the spring and locking ball.

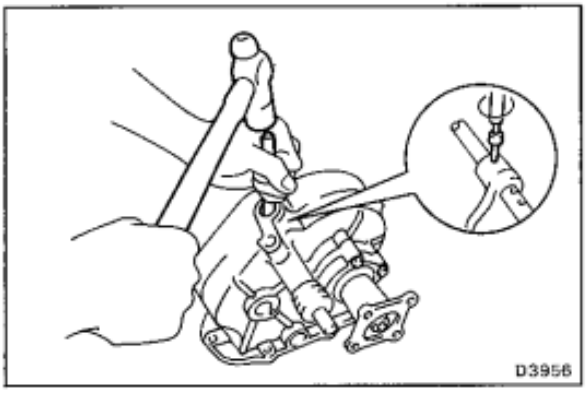

(c) Using a pin punch and hammer, tap out the slotted spring pin.

(d) Remove the dust boot, and then remove the shift shaft and fork.

(e) Remove the dust seal and O-ring.

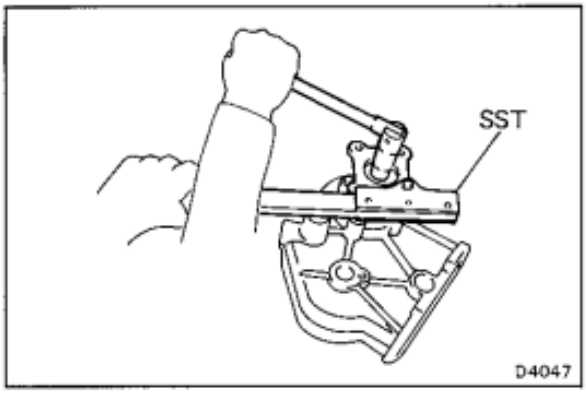

5. REMOVE UNIVERSAL JOINT FLANGE

(a) Remove the cotter pin.

(b) Using SST to hold the flange, remove the nut.

SST 09330-00021

(c) Remove the washer, flange and woodruff key.

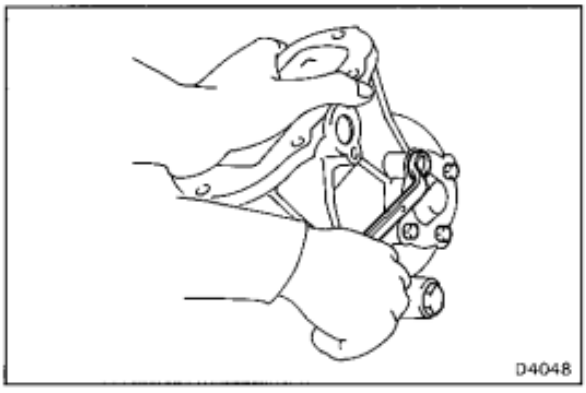

6. REMOVE P.T.O. COVER

(a) Remove the four bolts.

(b) Remove the P.T.O. cover and gasket.

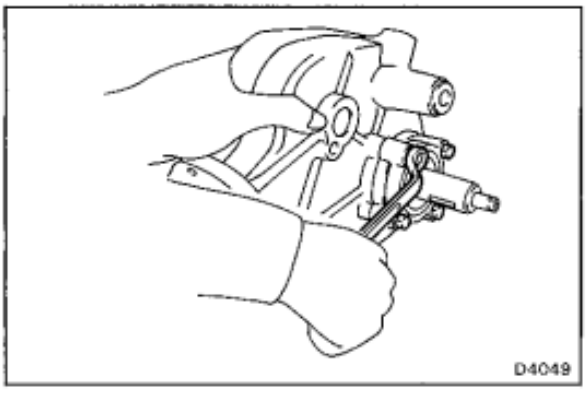

7. REMOVE BEARING RETAINER

(a) Remove the four bolts.

(b) Remove the bearing retainer and gasket.

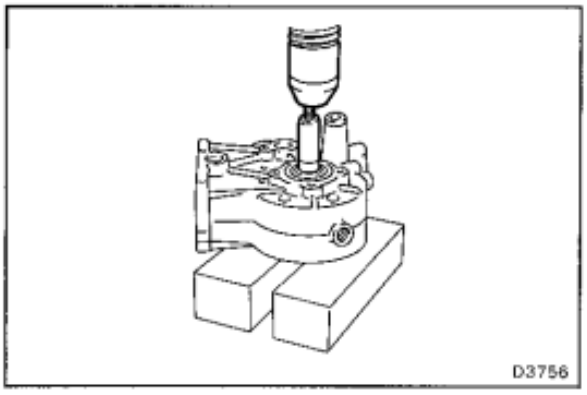

8. REMOVE OUTPUT GEAR AND SHAFT

Using a press, remove the front bearing, two spacers, output gear and shaft.

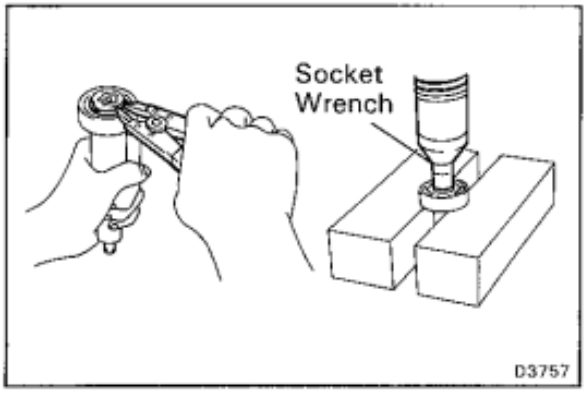

9. REMOVE REAR BEARING FROM OUTPUT SHAFT

(a) Using snap ring pliers, remove the snap ring.

(b) Using a press and 17 mm socket wrench, remove the bearing.

INSPECTION OF P.T.O. COMPONENTS

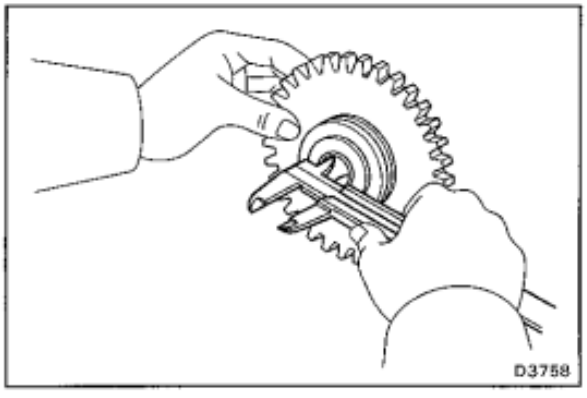

1. INSPECT INPUT GEAR BUSHING

Using calipers, measure the bushing bore.

Maximum bore: 20.1 mm (0.791 in.)

If the bushing bore is greater than the maximum, replace the input gear assembly.

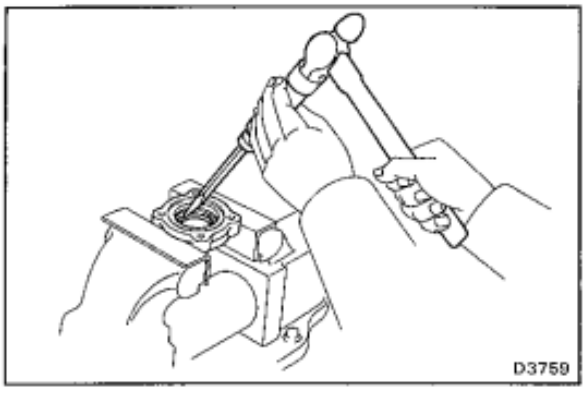

2. REPLACE BEARING RETAINER OIL SEAL

(a) Using a screwdriver, tap out the oil seal.

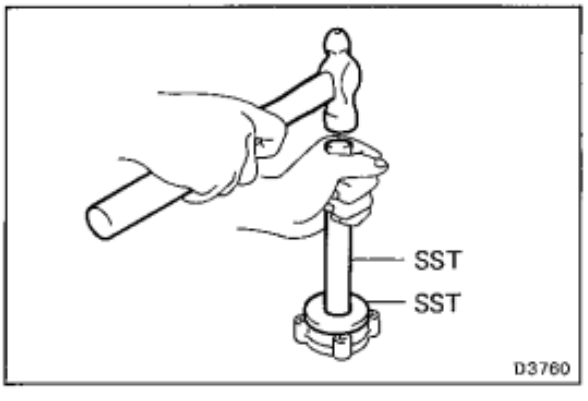

(b) Using SST, install a new oil seal.

SST 09608-35013

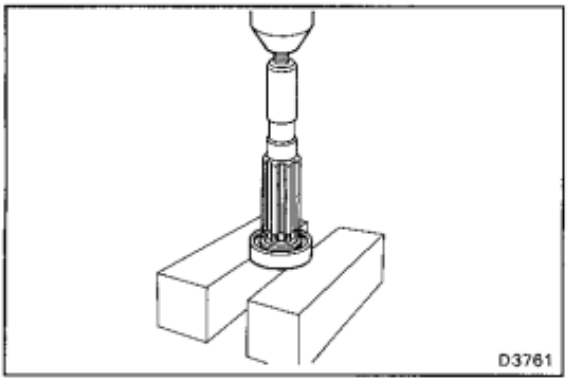

ASSEMBLY OF P.T.O.

(See page WI-2)

1. INSTALL REAR BEARING TO OUTPUT SHAFT

(a) Using a press, install the bearing to the shaft.

(b) Using snap ring pliers, install the snap ring.

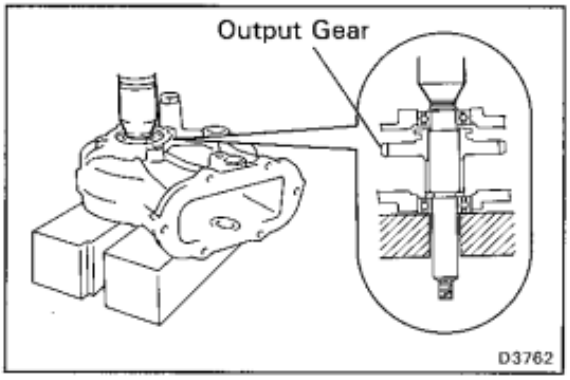

2. INSTALL OUTPUT GEAR AND SHAFT

(a) Install front bearing, output gear and two spacers to the case as shown.

(b) Put the output shaft into the front bearing through the output gear and two spacers.

(c) Using a press, press the output shaft into the front bearing.

HINT: Install in proper direction only.

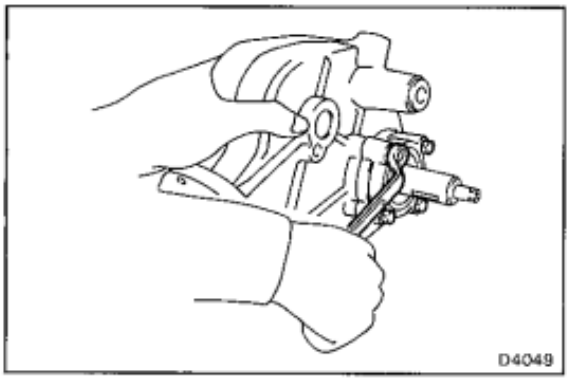

3. INSTALL BEARING RETAINER

(a) Install a new gasket and bearing retainer.

(b) Install and torque the four bolts.

Torque: 195 kg-cm (14 ft-lb, 19 N·m)

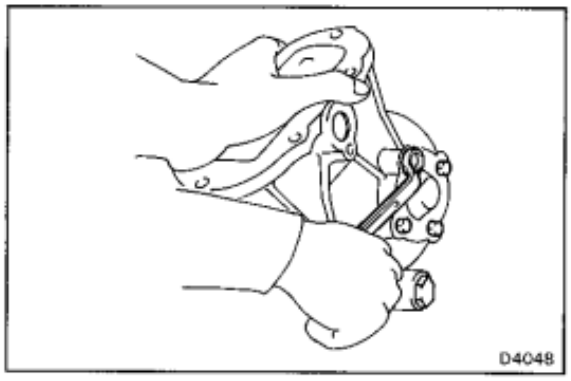

4. INSTALL P.T.O. COVER

(a) Install a new gasket and the cover.

(b) Install and torque the four bolts.

Torque: 75 kg-cm (65 in.-lb, 7.4 N·m)

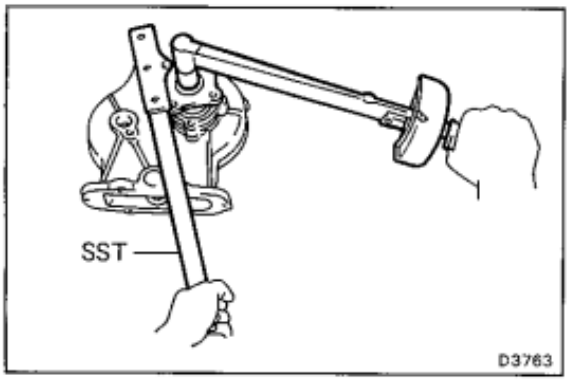

5. INSTALL UNIVERSAL JOINT FLANGE

(a) Install the woodruff key, flange an washer.

(b) Using SST to hold the flange, install and torque the nut.

SST 09330-00021

Torque: 480 kg-cm (35 ft-lb, 47 N·m)

(c) Install a new cotter pin.

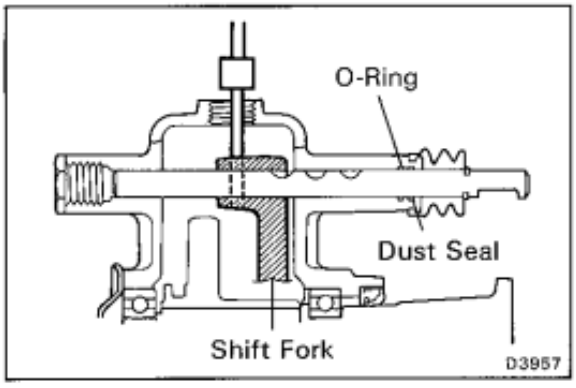

6. INSTALL SHIFT FORK AND SHAFT

(a) Apply MP grease to the O-ring and then install it.

(b) Install the dust seal.

(c) Put the shift fork into the case and install the shift shaft into the case through the shift fork.

HINT: Install in proper direction only.

(d) Using a pin punch and hammer, drive in the slotted spring pin.

(e) Install the dust boot.

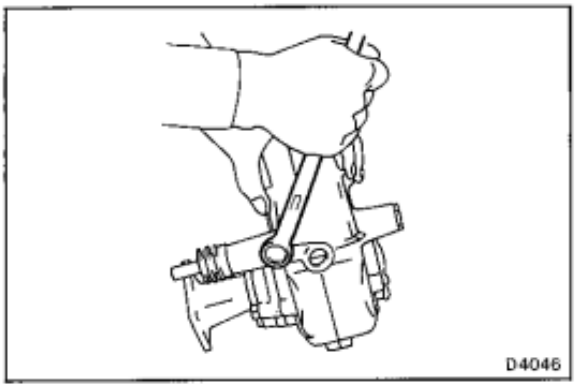

7. INSTALL LOCKING BALL, SPRING, NEW GASKET AND BOLT

Torque: 130 kg-cm (9 ft-lb, 13 N·m)

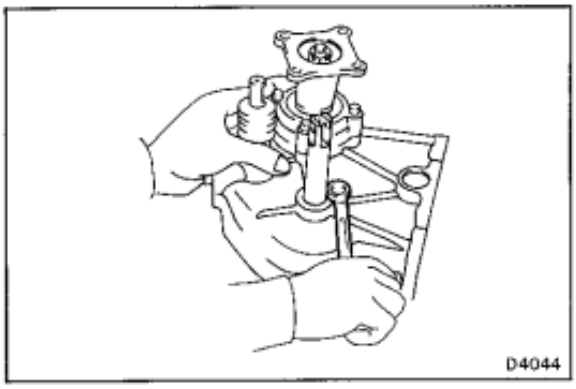

8. INSTALL IDLER SHAFT

(a) Apply MP grease to the O-rings and install the O-rings to the shaft.

(b) Install the shaft into the case with the lock plate.

(c) Install and torque the bolt.

HINT: Be careful not to damage the O-ring.

Torque: 130 kg-cm (9 ft-lb, 13 N·m)

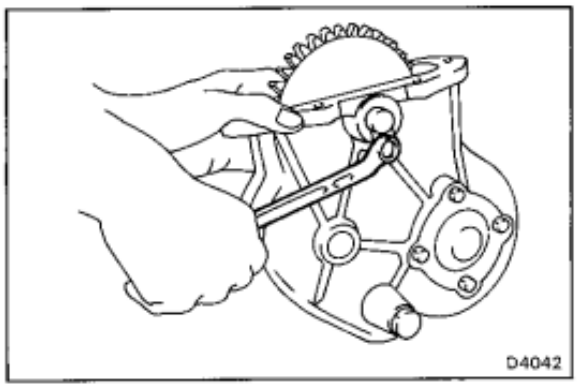

9. INSTALL INPUT GEAR AND SHAFT

(a) Apply MP grease to the O-ring and install the O-ring to the shaft.

(b) Put the input gear to the shift fork.

HINT: Install in proper direction only.

(c) Install the input gear shaft into the case through the input gear.

(d) Install the lock plate.

(e) Install and torque the bolt.

Torque: 130 kg-cm (9 ft-lb, 13 N·m)

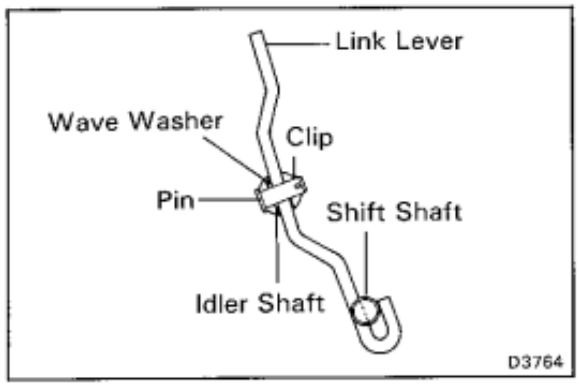

10. INSTALL LINK LEVER

(a) Align the notch of the shift shaft and the hook of the link lever.
Install the link lever onto the idle shaft together with a wave washer.

(b) Insert the pin and install the clip.

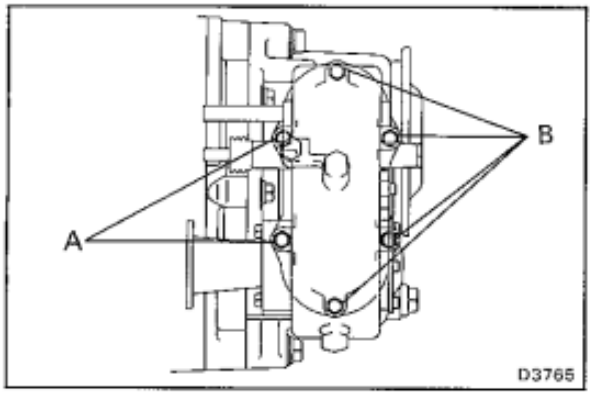

INSTALLATION OF P.T.O.

(See page WI-2)

1. **INSTALL P.T.O.**

   (a) Apply liquid sealer to the threads of the two front side bolts A.

   Sealant: Part No. 08833-00070, THREE BOND 1324 or equivalent

   (b) Install a new gasket and P.T.O. assembly.

   (c) Install and torque the six bolts.

   Torque:

   A Front side 170 kg-cm (12 ft-lb, 17 N·m)
   B Other side 195 kg-cm (14 ft-lb, 19 N·m)

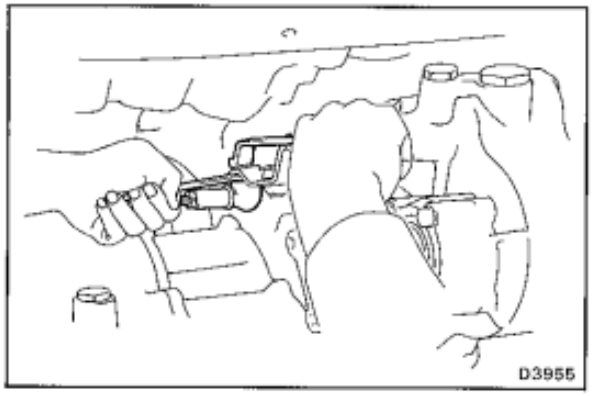

2. **CONNECT P.T.O. SHIFT ROD**

   Torque: 200 kg-cm (14 ft-lb, 20 N·m)

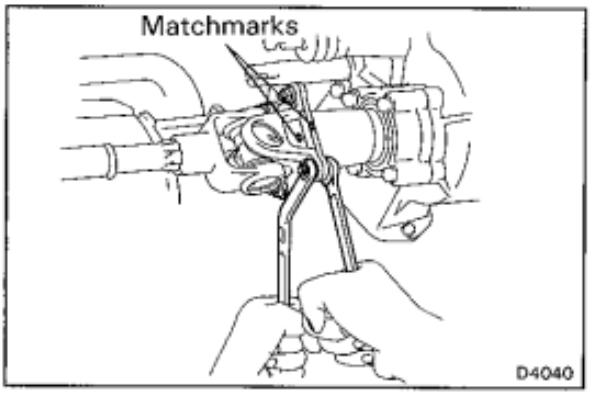

3. **CONNECT P.T.O. DRIVE SHAFT**

   (a) Align the matchmarks and connect the drive shaft.

   (b) Install and torque the bolts and nuts.

   Torque: 200 kg-cm (14 ft-lb, 20 N·m)

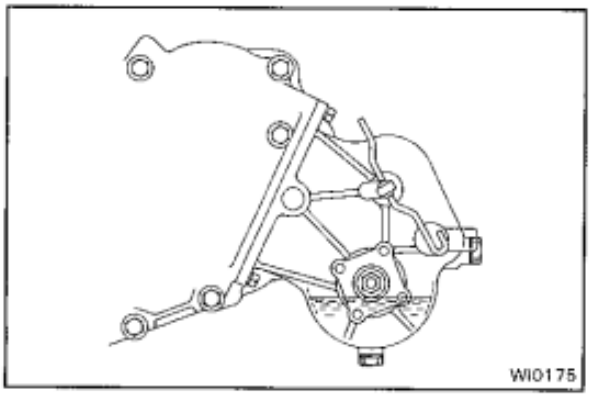

4. **FILL P.T.O. WITH TRANSMISSION OIL**

   Oil grade: API service GL-4 or GL-5
   SAE 75W — 90

   Capacity: about 0.5 liter (0.5 US qts, 0.4 Imp.qts)

Drive Shaft

COMPONENTS

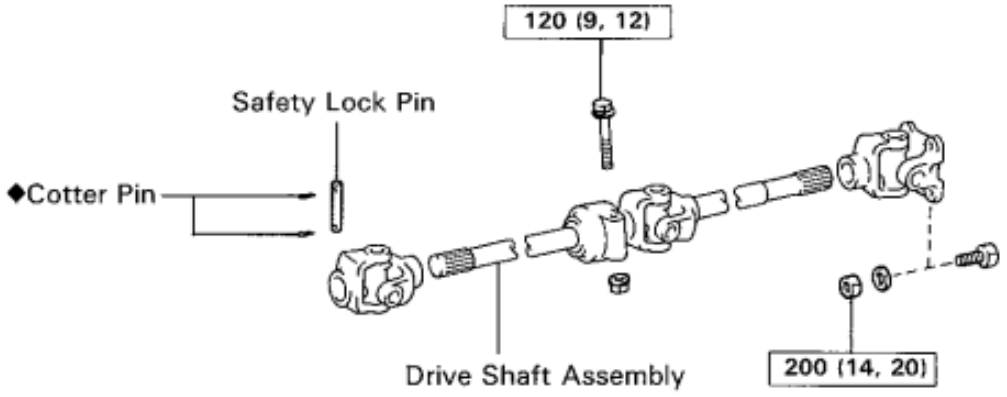

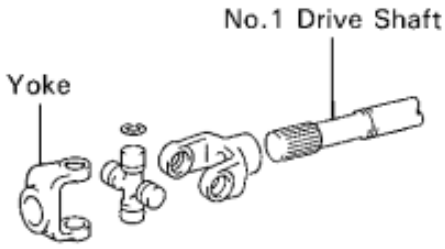

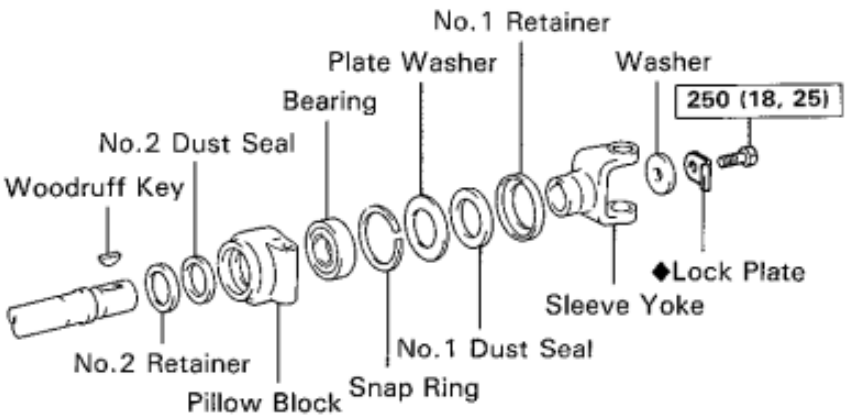

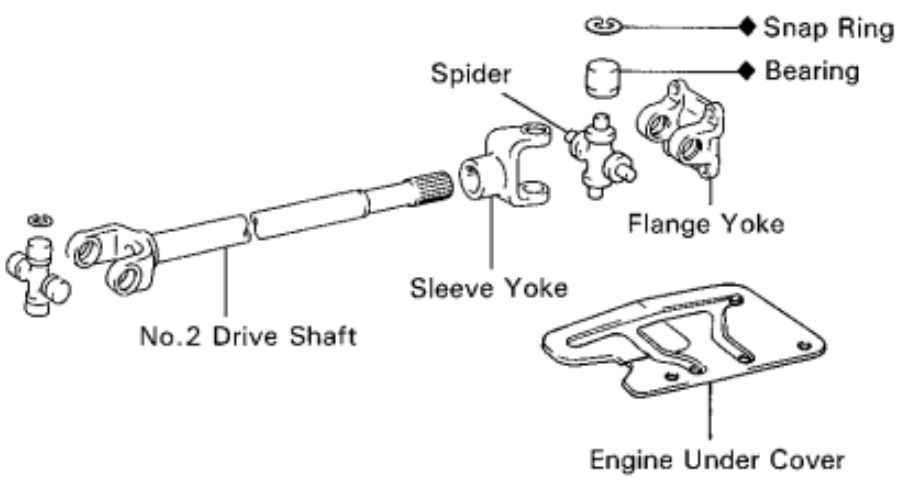

kg-cm (ft-lb, N·m) : Specified torque

◆ Non-reusable part

WI0165

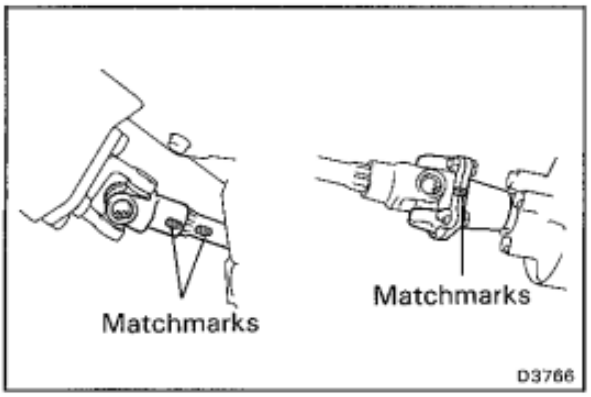

REMOVAL OF DRIVE SHAFT

(See page WI-10)

1. **REMOVE ENGINE UNDER COVER**

2. **REMOVE TRANSMISSION UNDER COVER**

3. **PLACE MATCHMARKS**

   Place the matchmarks on the drive shaft and universal joint or P.T.O. companion flange.

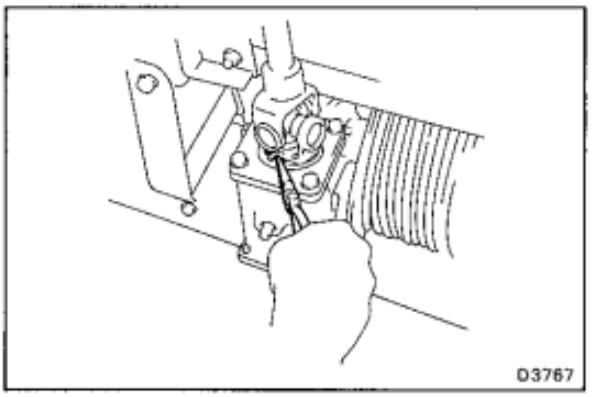

4. **REMOVE SAFETY LOCK PIN**

   Remove the two cotter pins and safety lock pin.

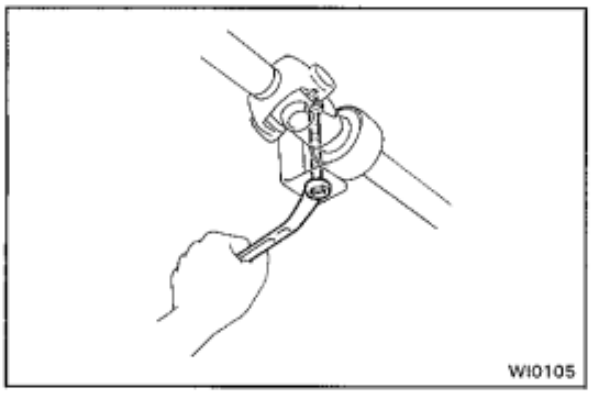

5. **DISCONNECT DRIVE SHAFT**

   (a) Remove the pillow block set bolt and nut.

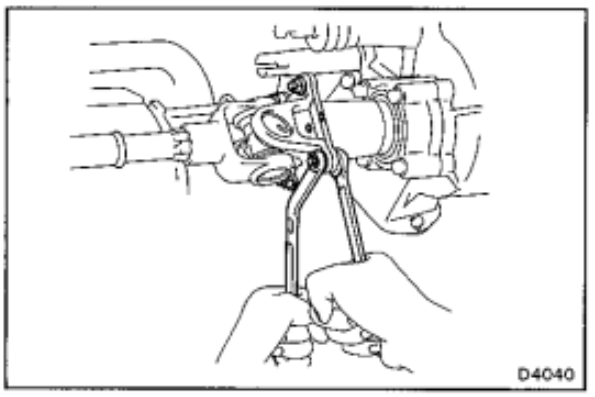

   (b) Remove the P.T.O. companion flange set bolts and nuts, then disconnect the drive shaft assembly.

   HINT: Do not forcefully remove the universal joint.

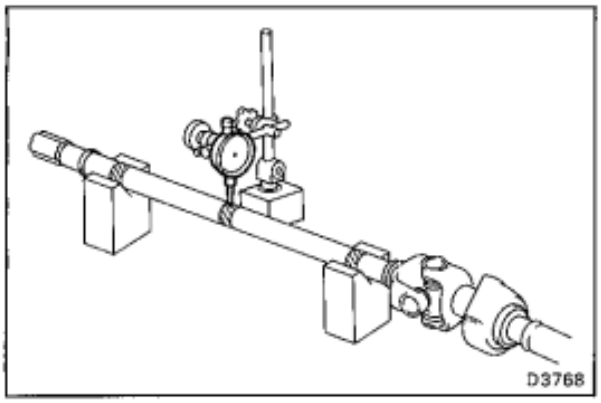

INSPECTION OF DRIVE SHAFT COMPONENTS

1. INSPECT DRIVE SHAFT FOR DAMAGE OR RUNOUT

Maximum runout: 0.7 mm (0.028 in.)

If the shaft runout is greater than the maximum, replace the shaft.

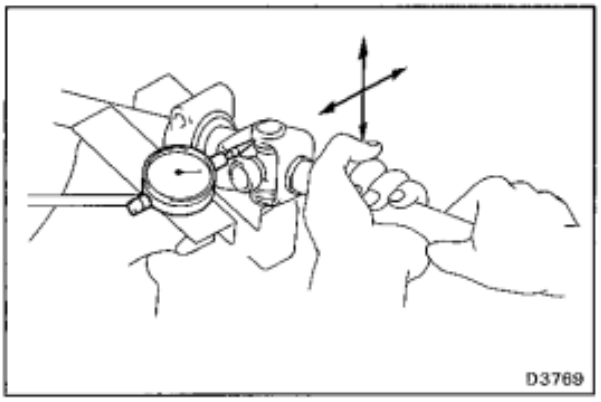

2. INSPECT SPIDER BEARINGS

(a) Inspect the spider bearings for wear or damage.

(b) Check the spider bearing axial play.

Bearing axial play: 0.15 mm (0.0059 in.)

If necessary, replace the spider bearing.

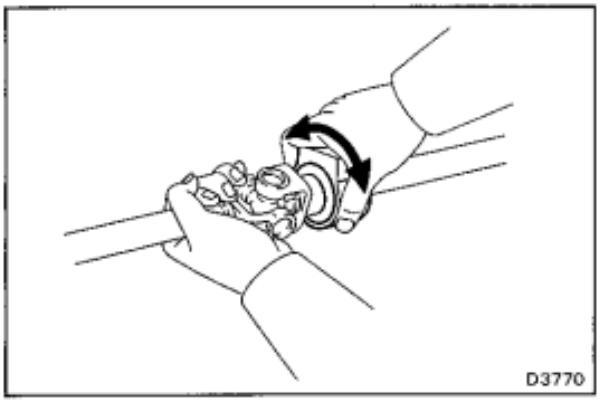

3. INSPECT PILLOW BLOCK BEARING

Check that the bearing turns freely.
If the bearing is damaged, worn or does not turn freely, replace it.

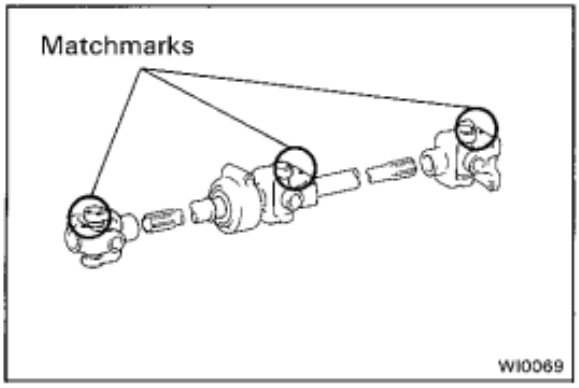

REPLACEMENT OF SPIDER BEARINGS

(See page WI-10)

1. **PLACE MATCHMARKS ON DRIVE SHAFT AND YOKES**

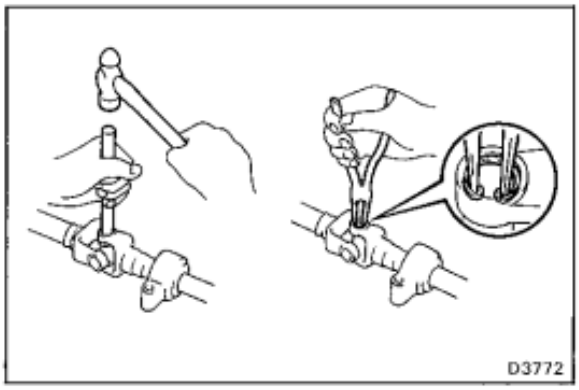

2. **REMOVE SNAP RINGS**
   (a) Slightly tap in the bearing outer races.
   (b) Using snap ring pliers, remove the four snap rings from the groove.

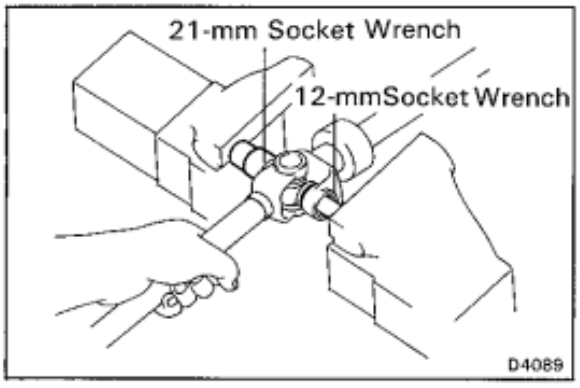

3. **REMOVE SPIDER BEARINGS**
   (a) Using 12 mm and 21 mm socket wrenches and an vise, press out the bearing.

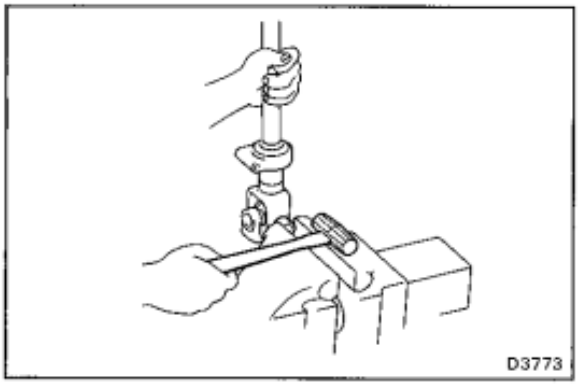

   (b) Clamp the outer bearing race in a vise and tap off the shaft with a plastic hammer or copper hammer.

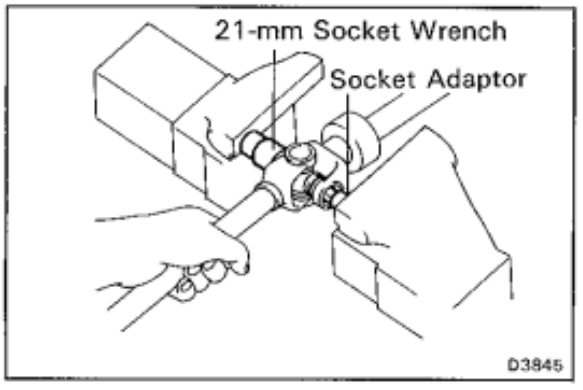

   (c) Using a socket adaptor, 21 mm socket wrench and vise, press out the bearing on the opposite side.
   (d) Remove the bearing on the opposite in the same procedure as shown in step (b).

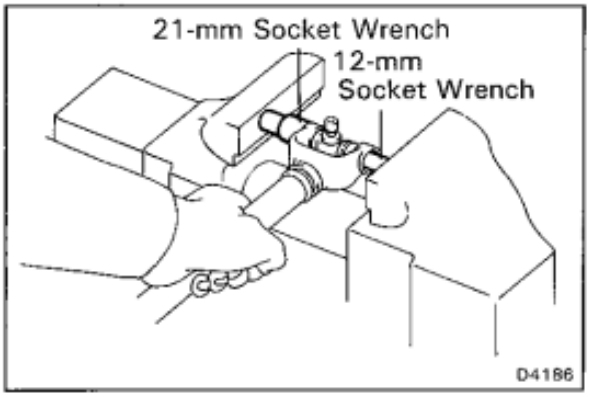

(e) Using 12 mm and 21 mm socket wrenches and a vise, press out the bearing.

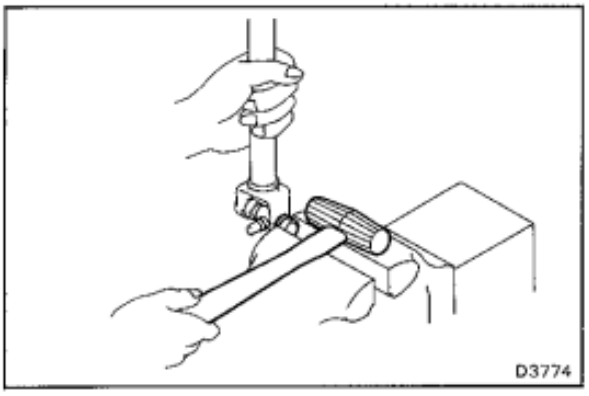

(f) Clamp the outer bearing race in an vise, and tap off the yoke with a plastic hammer or copper hammer.

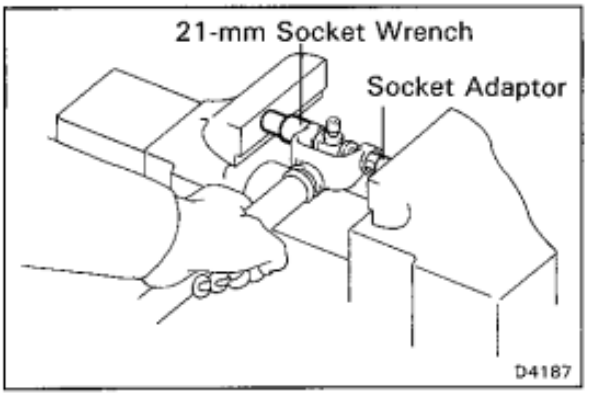

(g) Using a socket adaptor, 21 mm socket wrench and vise, press out the bearing on the opposite side.

(h) Remove the bearing on the opposite side in the same procedure as shown in step (f).

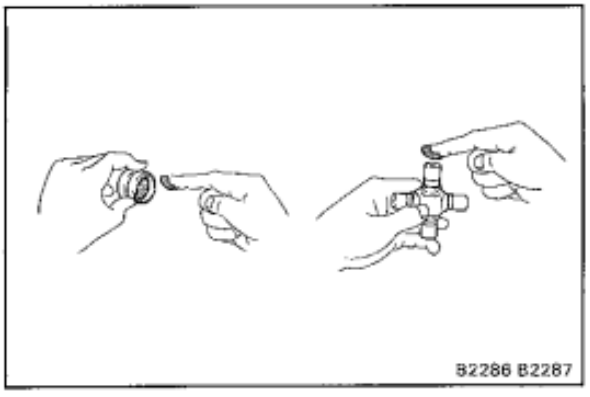

4. INSTALL SPIDER BEARINGS

(a) Apply molybdenum disulphide lithium base grease to the spider and bearings.

HINT: Be careful not to apply too much grease.

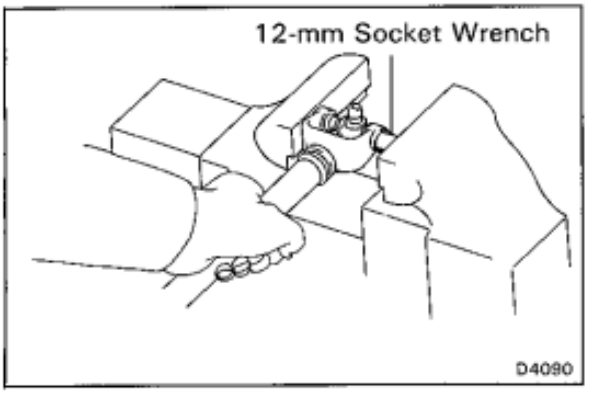

(b) Put the new spider into the yoke.

(c) Using a 12 mm socket wrench and vise, press the bearing onto the spider.

(d) Install the bearing on the opposite side using the procedure in (c).

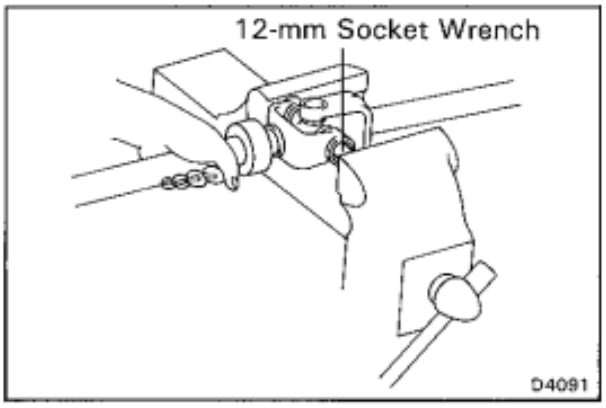

(e) Align the matchmarks on the yoke and shaft.

(f) Install new spider bearings in the shaft side using the procedure in steps (c) and (d).

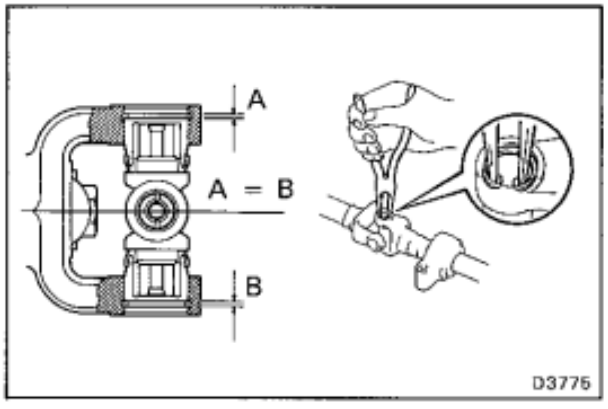

5. INSTALL SNAP RINGS

(a) Install two snap rings of a thickness which will allow 0 — 0.15 mm (0 — 0.0059 in.) of axial play.

HINT: Do not reuse the snap rings.

Snap ring thicknesses

Thickness mm (in.)		Color
1.20	(0.0472)	None
1.25	(0.0492)	Brown
1.30	(0.0512)	Blue

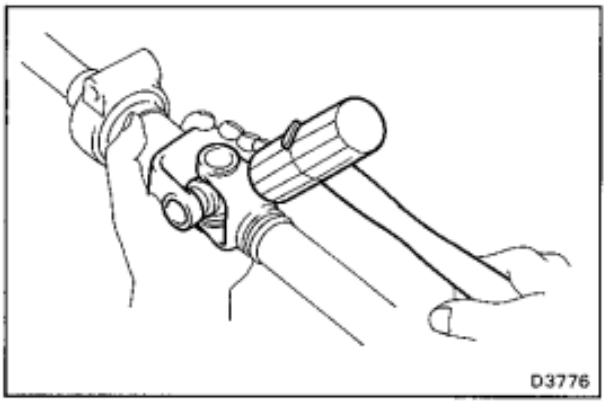

(b) Using a plastic hammer or copper hammer, tap the yoke until there is no clearance between the bearing outer race and snap ring.

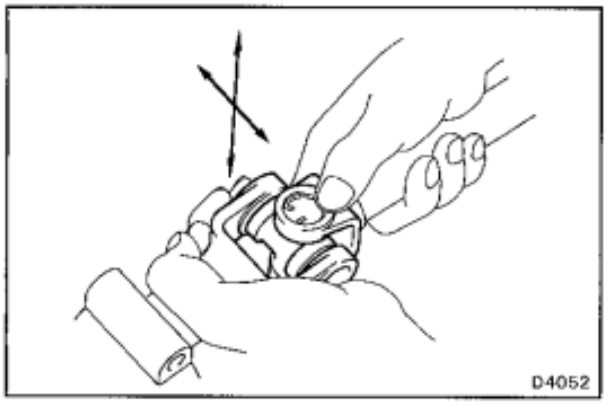

6. CHECK SPIDER BEARING

(a) Check that the spider bearing moves smoothly.

(b) Check the spider bearing axial play.

Bearing axial play: Less than 0.15 mm (0.0059 in.)

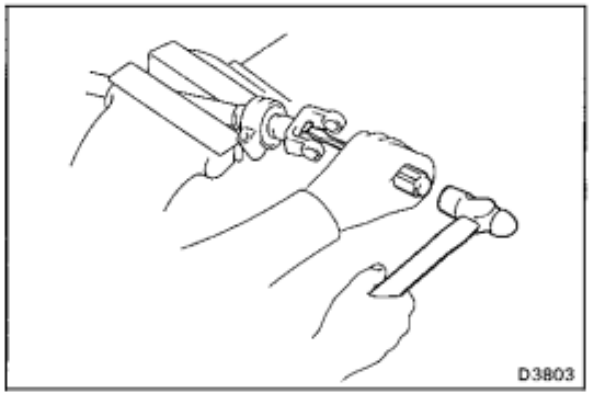

REPLACEMENT OF PILLOW BLOCK BEARING

(See page WI-10)

1. **REMOVE UNIVERSAL JOINT**
(See page WI-13)

2. **REMOVE SLEEVE YOKE**

(a) Using a chisel and hammer, loosen the staked part of the lock plate.

(b) Remove the bolt, lock plate and plate washer.

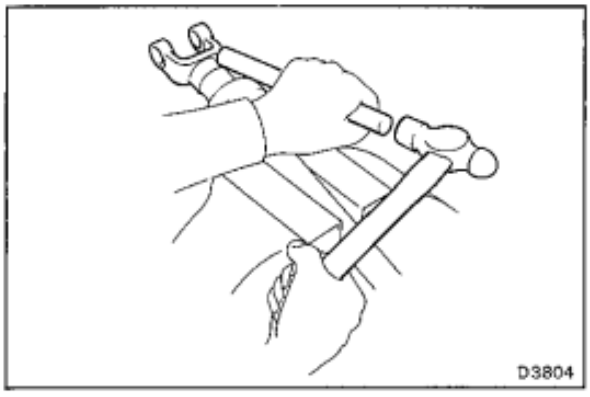

(c) Using a brass bar and hammer, remove the sleeve yoke.

(d) Remove the woodruff key.

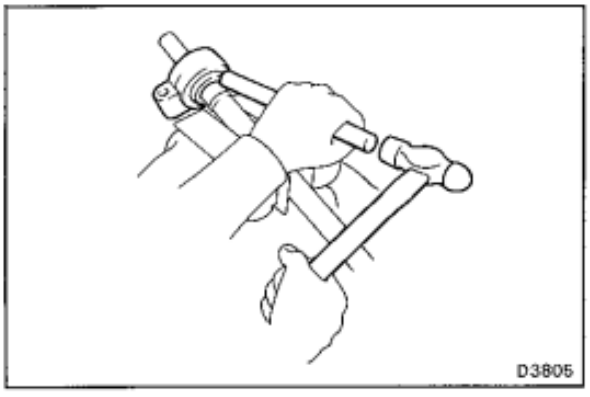

3. **REMOVE PILLOW BLOCK**

Using a brass bar and hammer, drive out the pillow block.

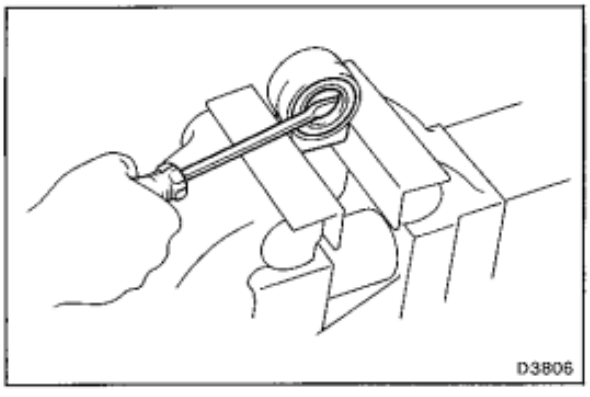

4. **REMOVE DUST SEALS, RETAINERS AND PLATE WASHER**

(a) Using a screwdriver, pry out the No.1 dust seal retainer and No.1 dust seal.

(b) Remove the plate washer.

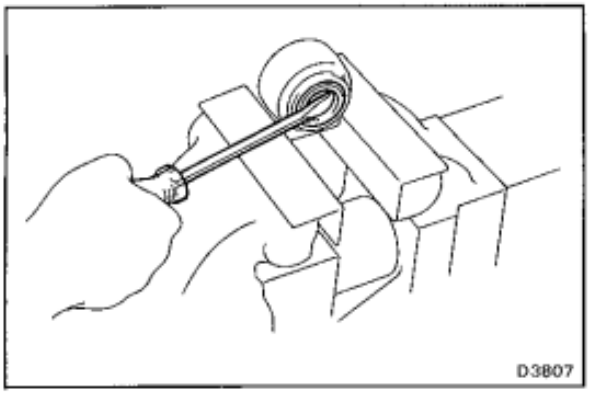

(c) Using a screwdriver, pry out the No.2 dust seal retainer and No.2 dust seal.

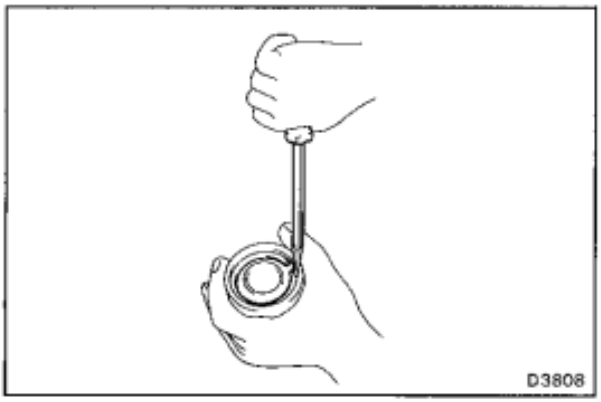

5. REMOVE BEARING

(a) Using a screwdriver, remove the snap ring.

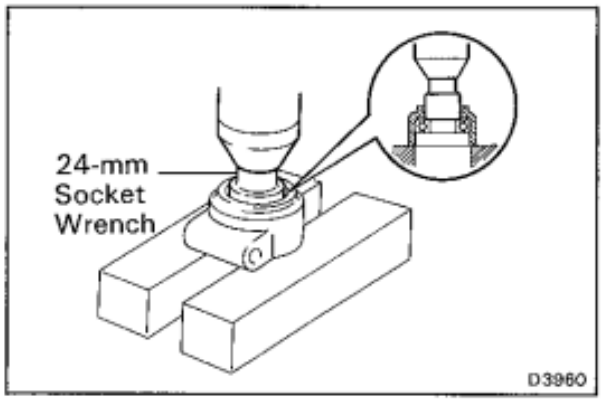

(b) Using a press and 24 mm socket wrench, press bearing.

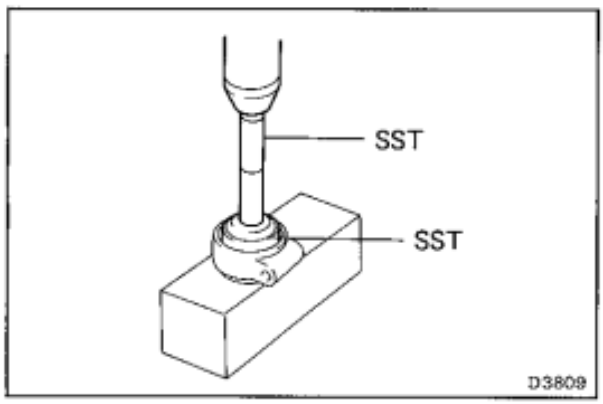

6. INSTALL NEW BEARING

(a) Using a press and SST, install a new bearing.

SST 09608-35013

(b) Install the snap ring.

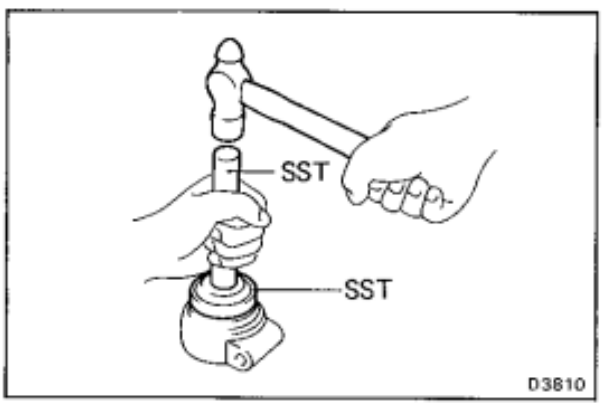

7. INSTALL NO.2 DUST SEAL AND NO.2 RETAINER

Using SST, install the No.2 dust seal and No.2 retainer.

SST 09608-35013

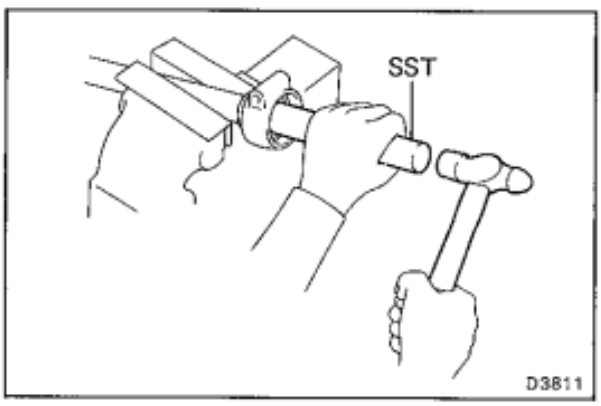

8. INSTALL PILLOW BLOCK

Using SST, install the pillow block.

SST 09612-22011

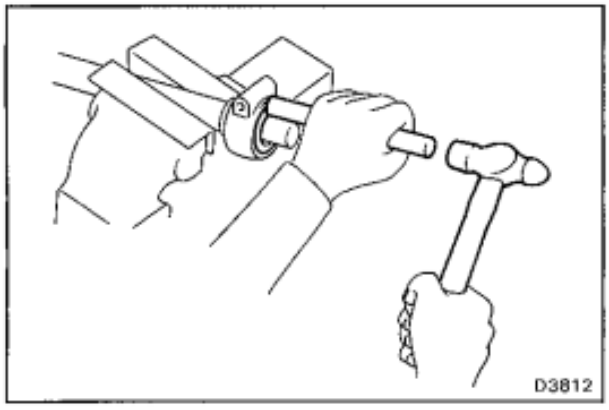

9. INSTALL PLATE WASHER, NO.1 DUST SEAL AND NO.1 RETAINER

(a) Install the plate washer.

(b) Using a brass bar and hammer, drive in the No.1 dust seal and No.1 retainer.

HINT: Be careful not to damage the retainer.

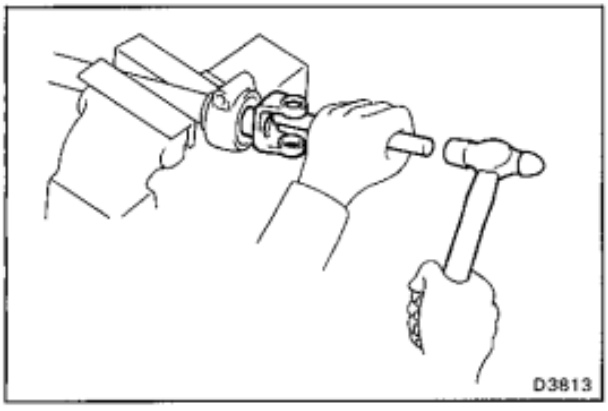

10. INSTALL SLEEVE YOKE

(a) Install the woodruff key.

(b) Using a brass bar and hammer, drive in the sleeve yoke.

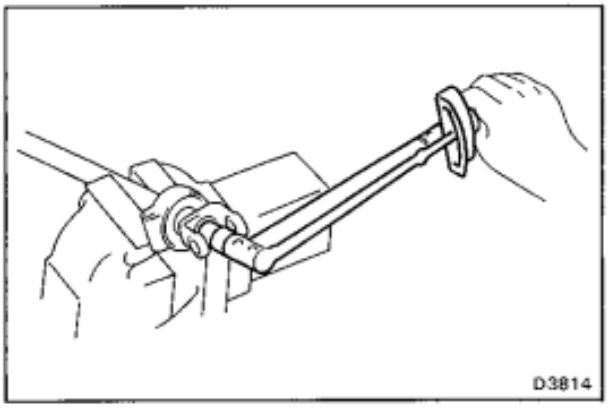

(c) Install the washer, lock plate.

(d) Install and torque the bolt.

Torque: 250 kg-cm (18 ft-lb, 25 N·m)

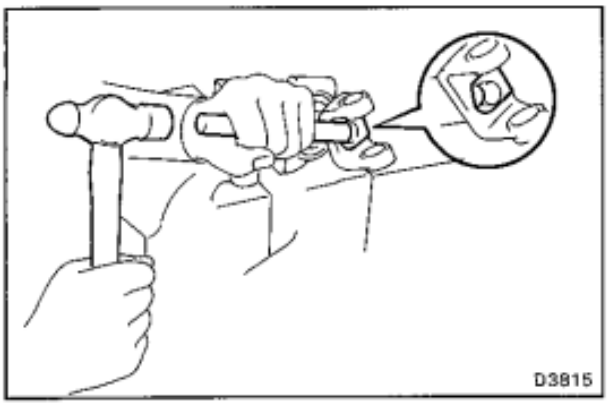

(e) Using a brass bar and hammer, stake the lock plate.

HINT: Stake claw flush with the flat surface of the bolt.

11. INSTALL UNIVERSAL JOINT
(See page WI-14)

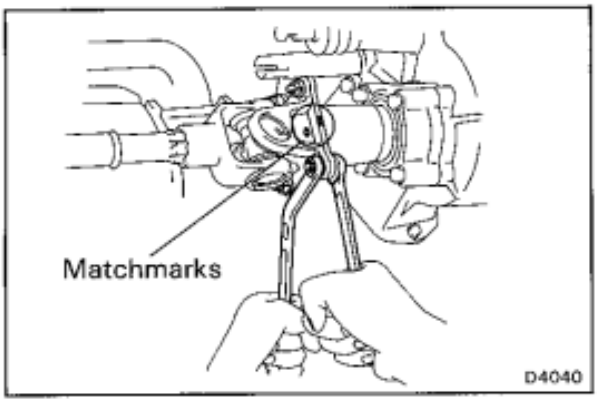

INSTALLATION OF DRIVE SHAFT

(See page WI-10)

1. **INSTALL DRIVE SHAFT**
   (a) Align the matchmarks on the drive shaft and universal joint or P.T.O companion flange.
   (b) Install and torque the bolts and nuts.
   Torque: 200 kg-cm (14 ft-lb, 20 N·m)

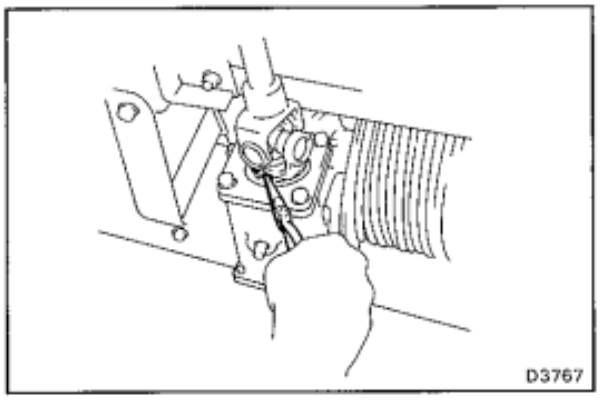

2. **INSTALL SAFETY LOCK PIN**
   (a) Align the safety lock pin hole of the universal joint and worm.
   (b) Install the safety lock pin and two cotter pins.

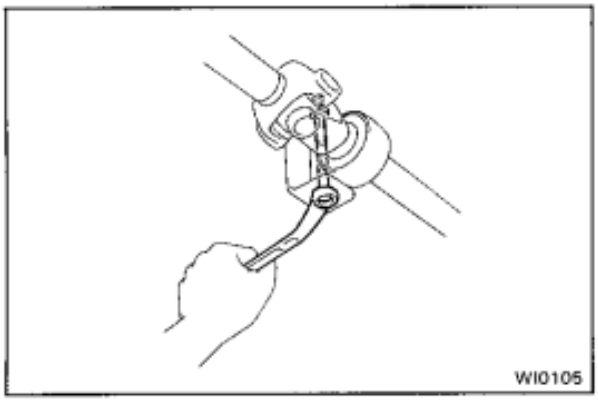

3. **INSTALL PILLOW BLOCK**
   (a) Install the pillow blocks.
   (b) Install and torque the bolts and nuts.
   Torque: 120 kg-cm (9 ft-lb, 12 N·m)

4. **INSTALL ENGINE UNDER COVER**

5. **INSTALL TRANSMISSION UNDER COVER**

Winch Assembly

REMOVAL AND INSTALLATION OF WINCH ASSEMBLY

Remove and install the parts as shown.

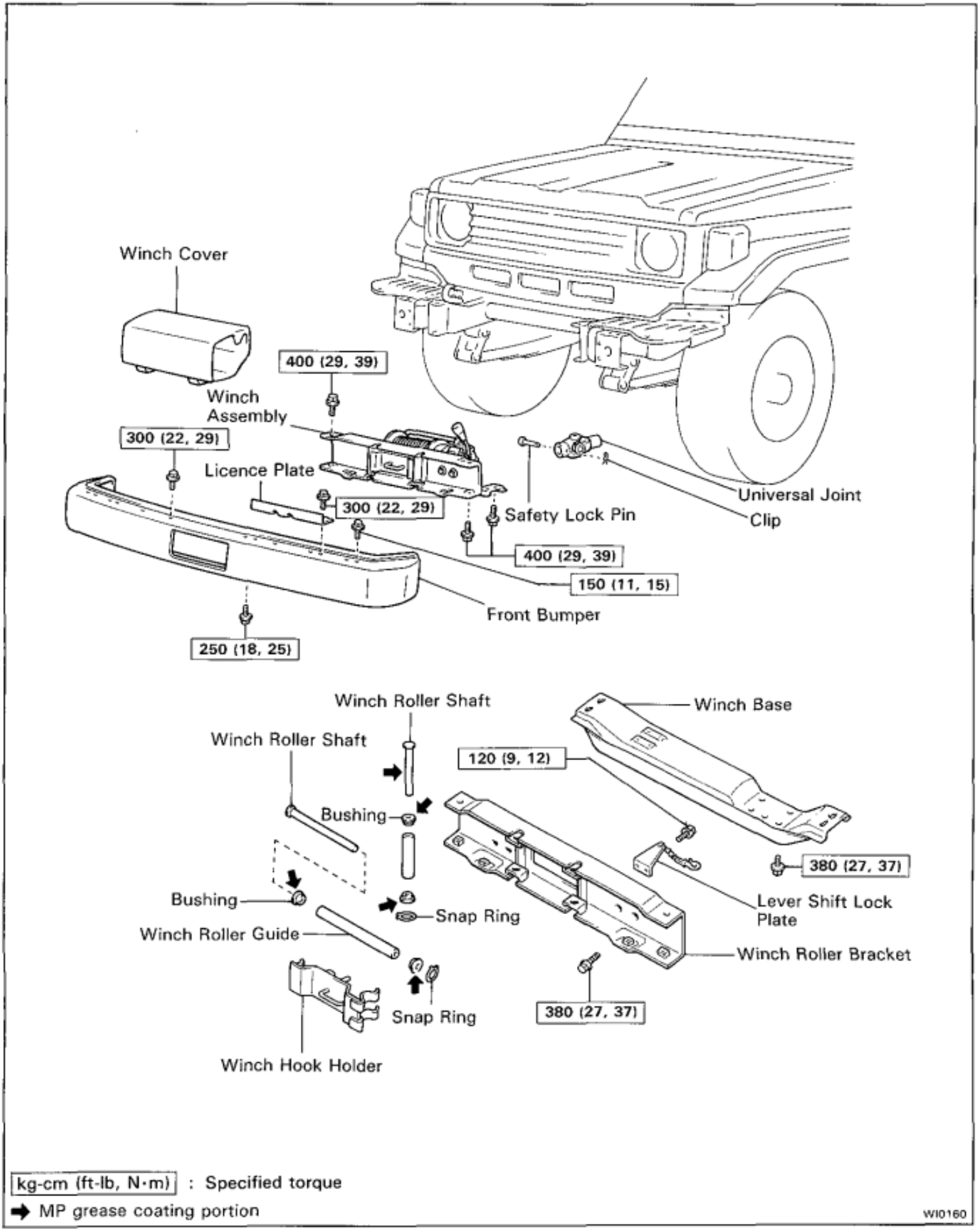

kg-cm (ft-lb, N·m) : Specified torque

➡ MP grease coating portion

WI0160

COMPONENTS

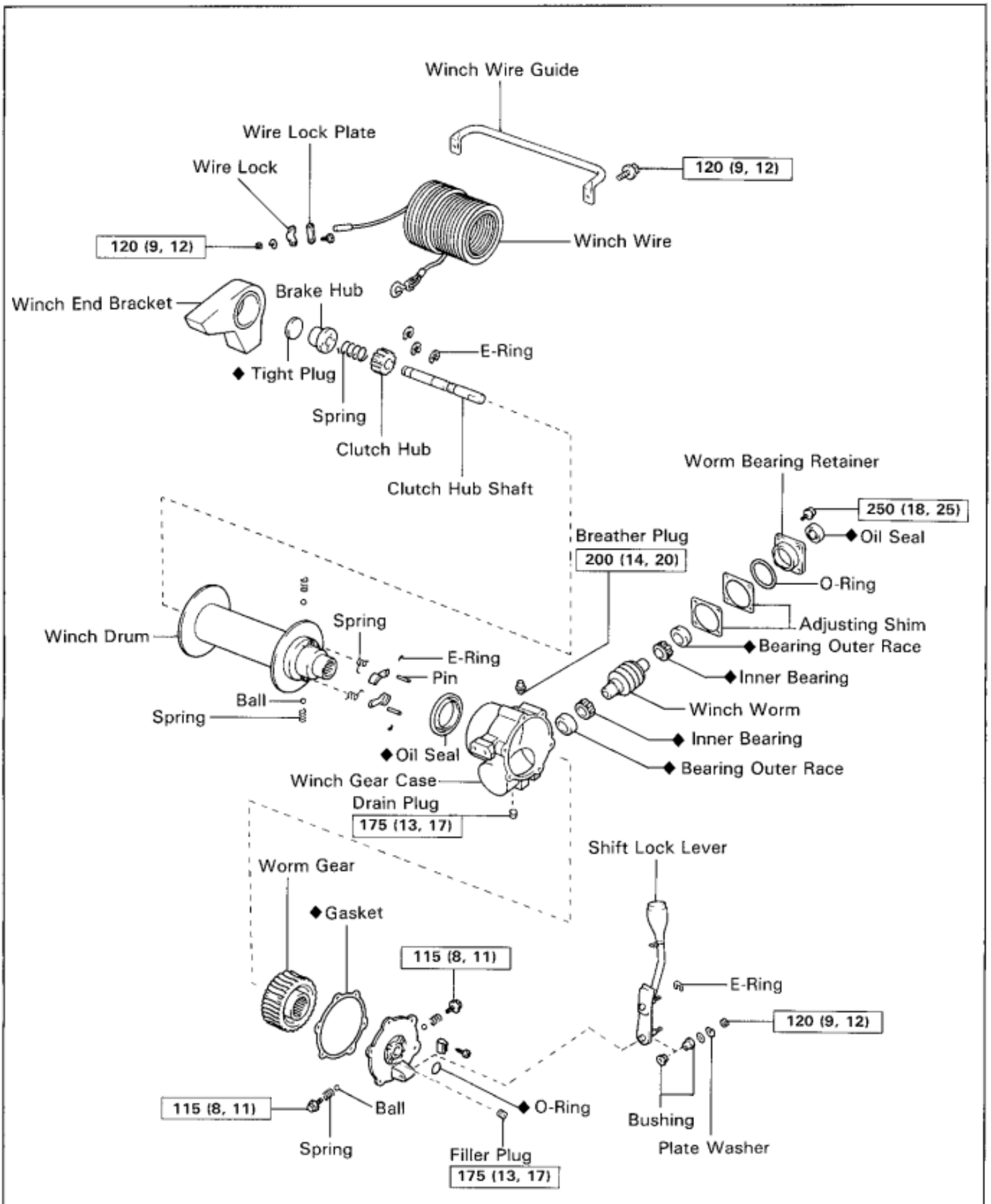

kg-cm (ft-lb, N·m) : Specified torque

◆ Non-reusable part

WI0152

DISASSEMBLY OF WINCH ASSEMBLY

(See page WI-21)

1. DRAIN WINCH FLUID
2. REMOVE WINCH WIRE GUIDE
3. REMOVE WINCH END BRACKET

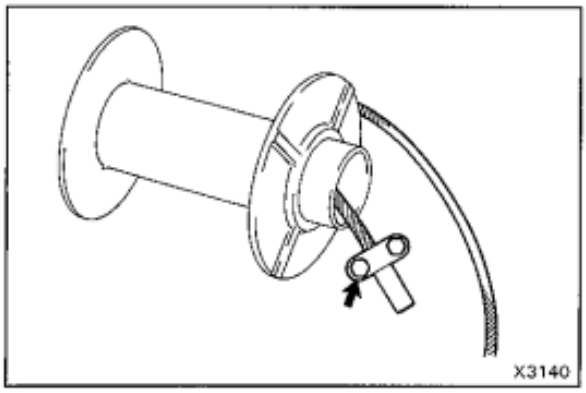

4. REMOVE WINCH WIRE
   (a) Remove the two bolts, spring washers and nuts.
   (b) Remove the wire lock and lock plate from the winch wire.

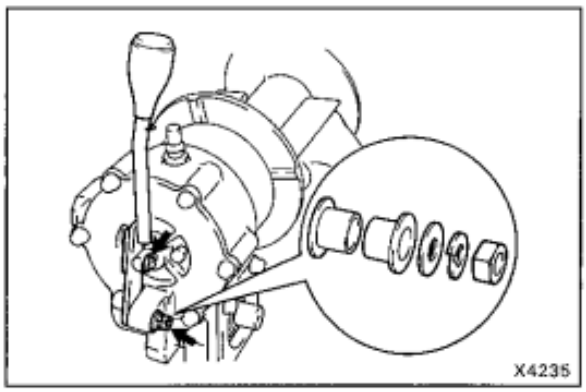

5. REMOVE SHIFT LOCK LEVER
   (a) Remove the nut, spring washer and plate washer.
   (b) Remove the E-ring and the shift lock lever.
   (c) Remove the two bushings from the shift lock lever.

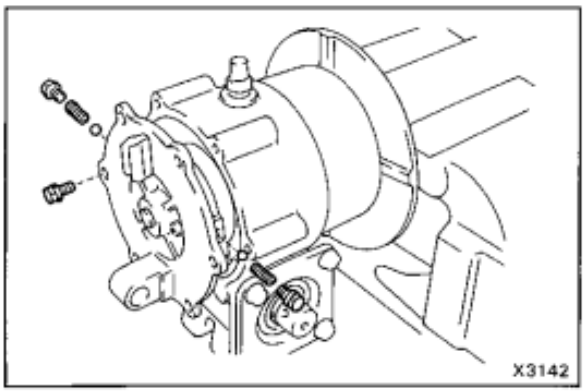

6. REMOVE WINCH GEAR CASE COVER
   (a) Remove the six bolts.
   (b) Tap the gear case cover with a plastic hammer.
   (c) Pull out the gear case cover until you can see the ball of clutch hub shaft and the bolt.
   (d) Remove the two bolts, the two balls and the two springs.
   (e) Remove the gear case cover and gasket.
   (f) Remove the O-ring from the gear case cover.

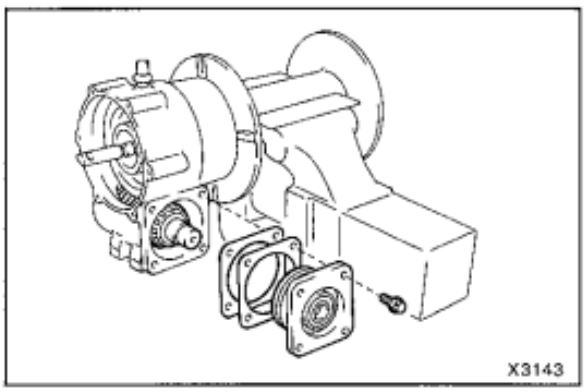

7. REMOVE WINCH WORM
   (a) Remove the four bolts.
   (b) Using a plastic hammer, remove the worm bearing retainer and the adjusting shims.
   (c) Remove the winch worm.
   (d) Remove the O-ring from the worm bearing retainer.

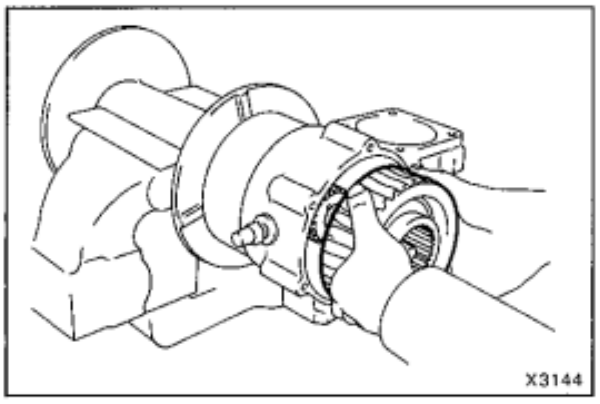

8. REMOVE WORM GEAR

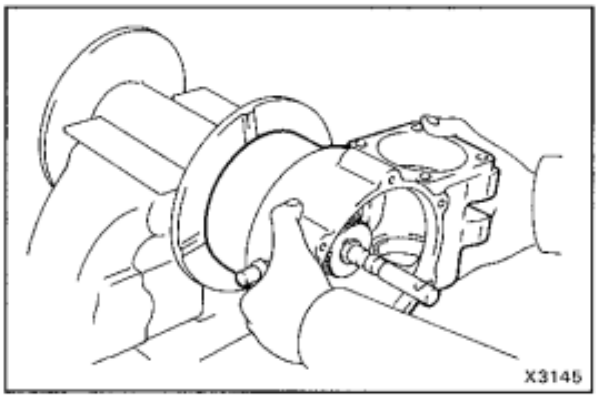

9. REMOVE WINCH GEAR CASE

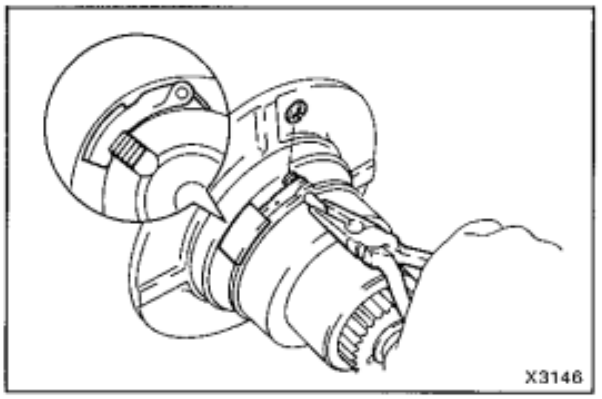

10. REMOVE WINCH BRAKE

(a) Remove the two E-rings.

(b) Pull out the two pins.

(c) Remove the two torsion springs and the two winch brakes.

(d) Remove the two springs and the two balls from the winch drum.

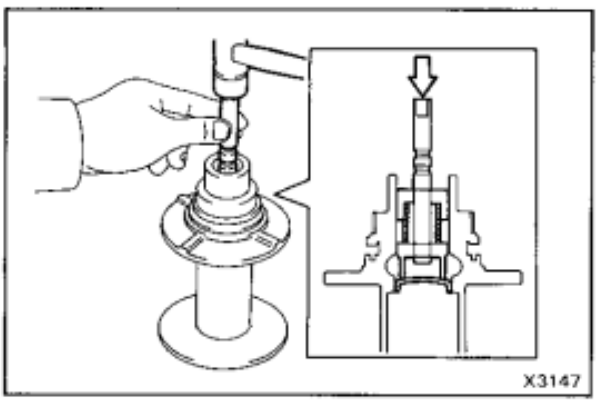

11. REMOVE CLUTCH HUB SHAFT

(a) Using a plastic hammer, tap the top of the clutch hub shaft.

(b) Remove the tight plug.

(c) Pull out the clutch hub shaft from the winch drum.

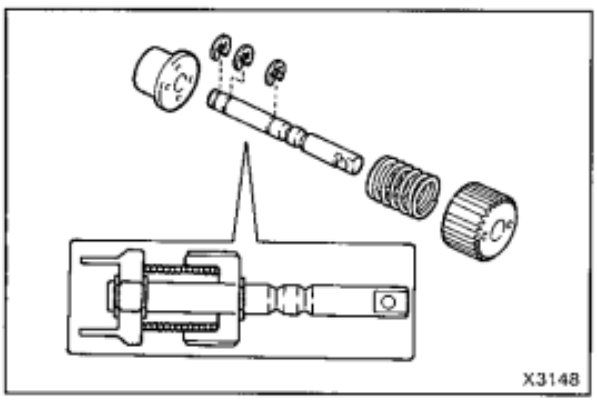

(d) Remove the three E-rings.

(e) Remove the clutch hub, the spring and the brake hub from the clutch hub shaft.

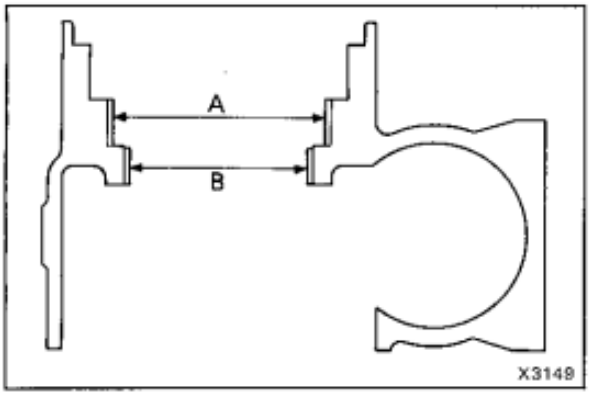

INSPECTION AND REPLACEMENT OF WINCH ASSEMBLY

1. INSPECT GEAR CASE

Using a caliper gauge, measure the bushing bore.

Standard bore:

A: 90.000 — 90.035 mm (3.5433 — 3.5447 in.)
B: 75.000 — 75.030 mm (2.9528 — 2.9539 in.)

Maximum bore:

A: 90.3 mm (3.555 in.)
B: 75.3 mm (2.965 in.)

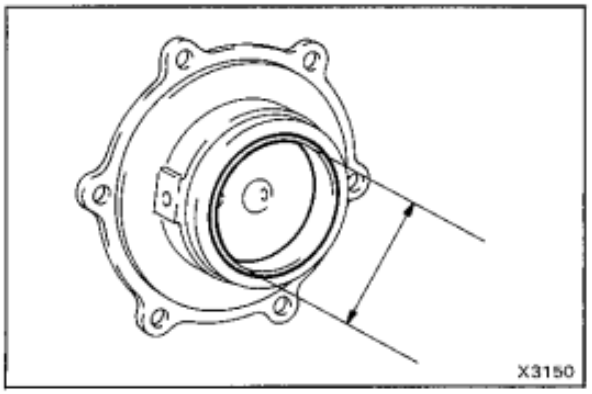

2. INSPECT WINCH GEAR CASE COVER

Using calipers, measure the bushing bore.

Standard bore:

65.000 — 65.030 mm (2.5591 — 2.5602 in.)

Maximum bore:

65.3 mm (2.571 in.)

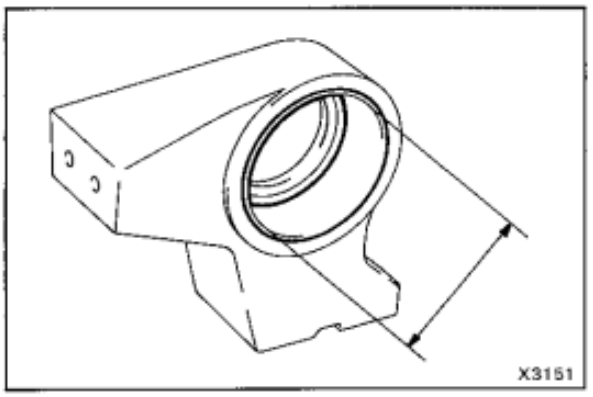

3. INSPECT WINCH END BRACKET

Using calipers, measure the bushing bore.

Standard bore:

75.000 — 75.030 mm (2.9528 — 2.9539 in.)

Maximum bore:

75.2 mm (2.961 in.)

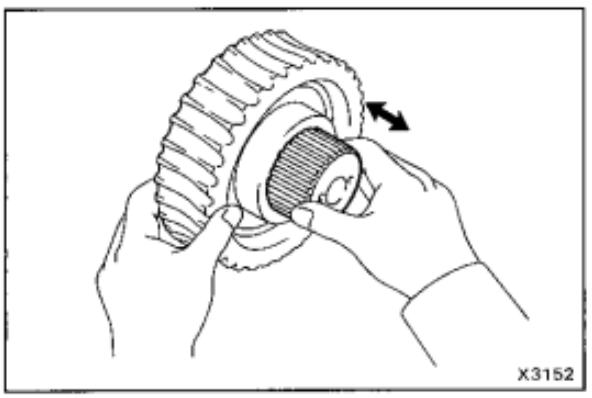

4. INSPECT WORM GEAR

(a) Inspect the worm gear for wear or damage.
(b) Install the clutch hub to the worm gear.
(c) Inspect that the clutch hub moves smoothly.

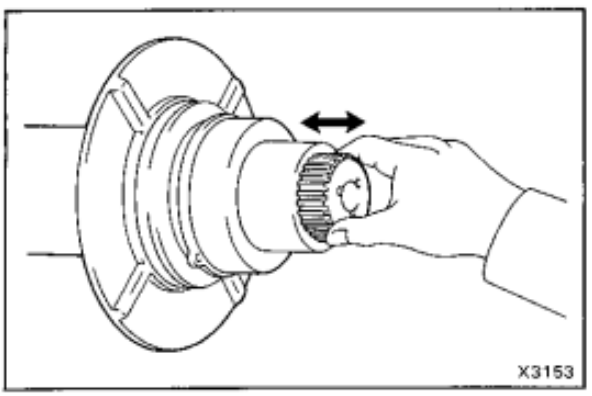

5. INSPECT WINCH DRUM AND CLUTCH HUB

(a) Install the clutch hub to the winch drum.
(b) Inspect that the clutch hub moves smoothly.

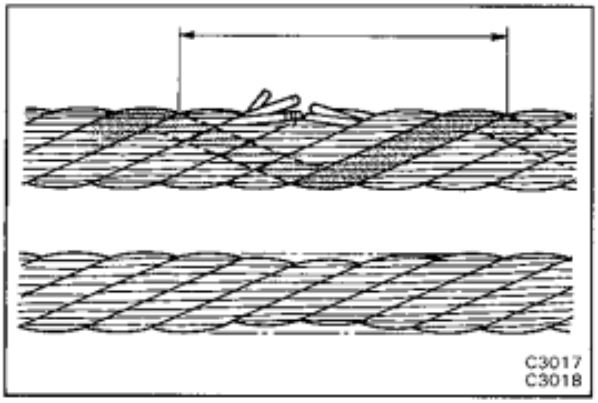

6. **INSPECT WINCH WIRE**

Inspect the winch wire for the following items. If damaged, replace the winch wire.

- More than 12 severed strands per wind.
- Wire diameter of less than 7.5 mm (0.295 in.)

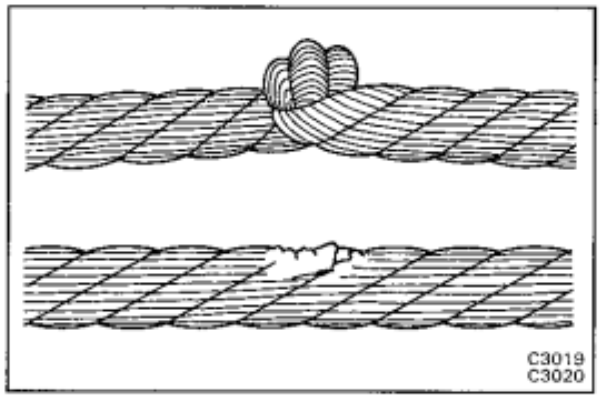

- Kinks
- Corrosion
- Fraying

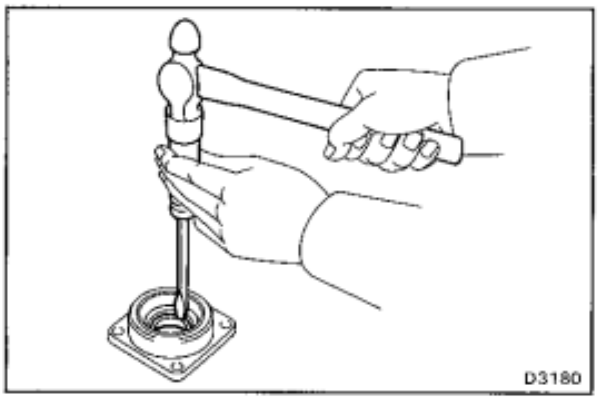

7. **REPLACE WORM BEARING RETAINER OIL SEAL**

(a) Using a screwdriver, tap out the oil seal.

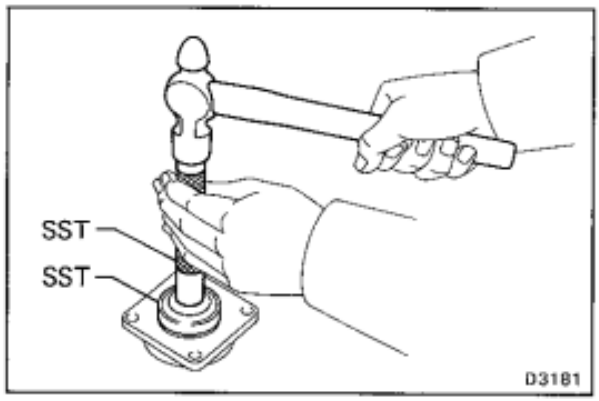

(b) Using SST, install a new oil seal.

SST 09608-35014 (09608-06020, 09608-06090)

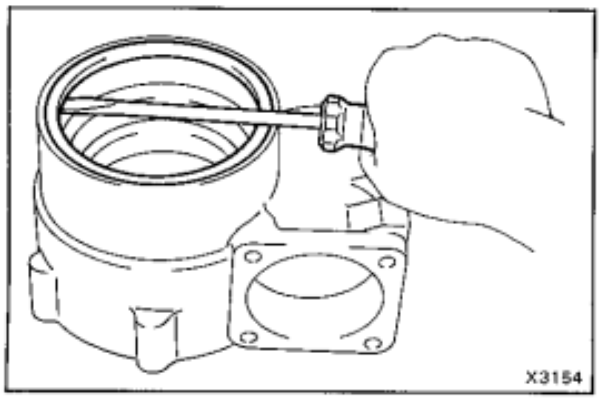

8. **REPLACE WINCH GEAR CASE OIL SEAL**

(a) Using a screwdriver, pry off the oil seal.

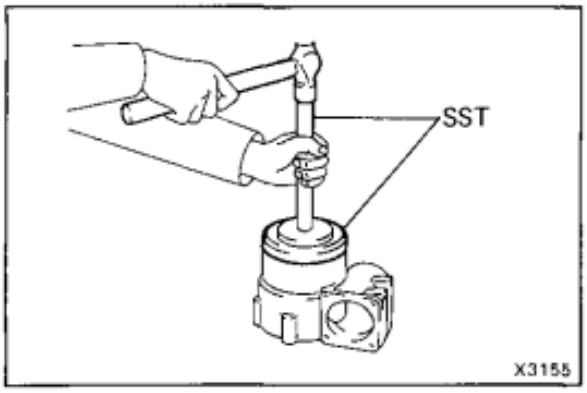

(b) Using SST, install a new oil seal.

SST 09550-55010 (09550-05020, 09550-05070)

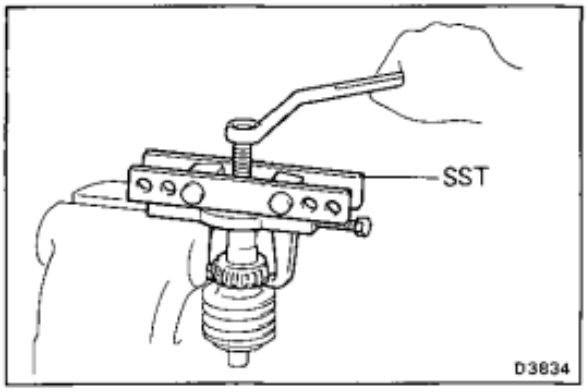

9. REPLACE WORM BEARING

(a) Using SST, remove the inner bearing.

SST 09950-20017

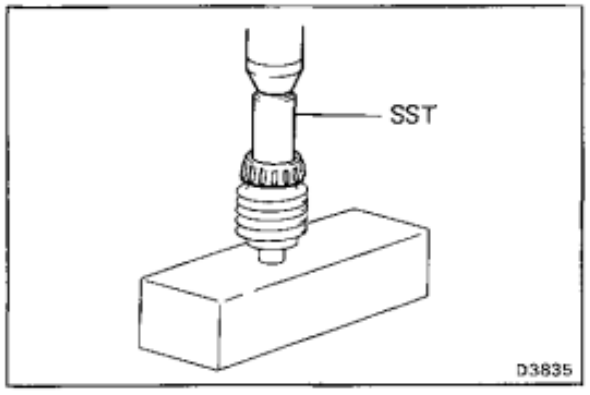

(b) Using a press and SST, press in a new inner bearing.

SST 09632-36010

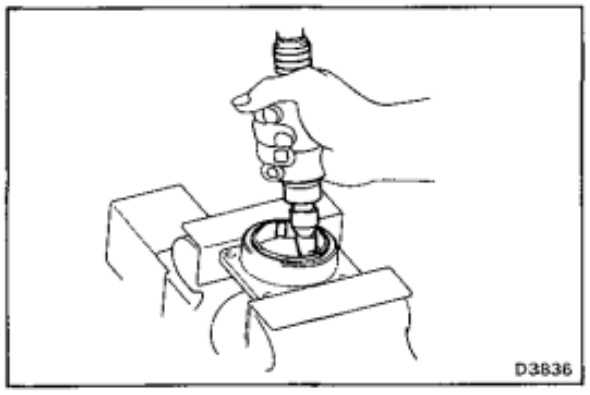

(c) Using a little air grinder, grind the bearing outer race (worm bearing retainer side).

HINT: Be careful not to damage the bearing retainer.

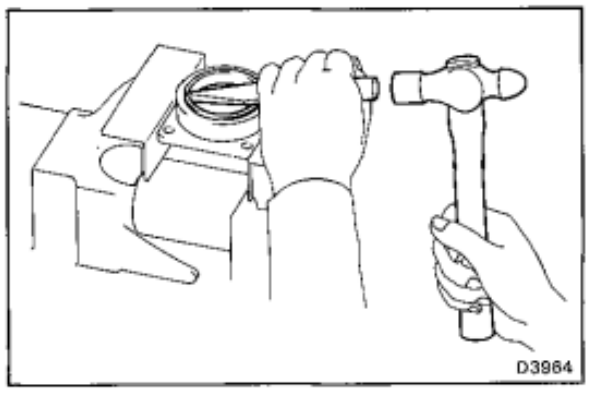

(d) Using a chisel and hammer, remove the bearing outer race (worm bearing retainer side).

HINT: Be careful not to damage the bearing retainer.

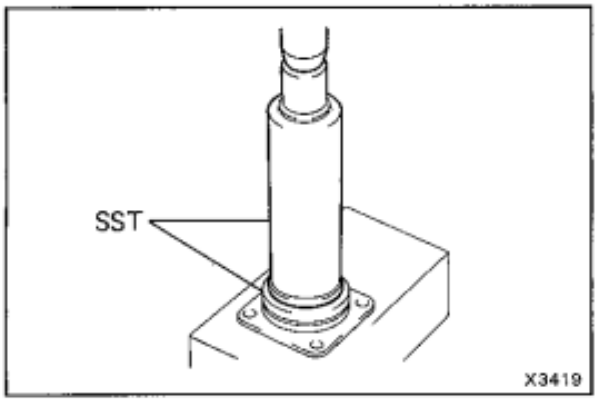

(e) Using SST and a press, press in a new outer race (worm bearing retainer side).

SST 09316-60010 (09316-00010, 09316-00070)

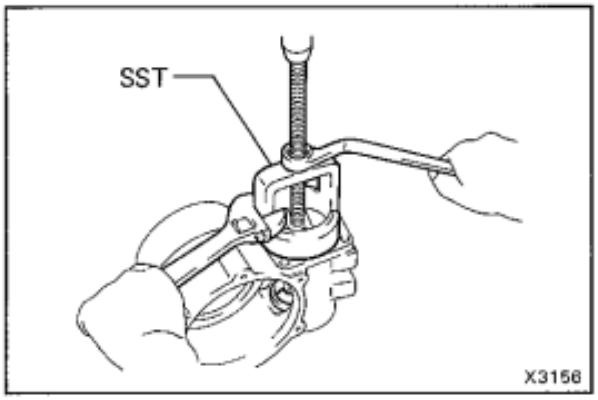

(f) Using SST, remove the bearing outer race (gear case side).

SST 09612-65014 (09612-01030, 09612-01050)

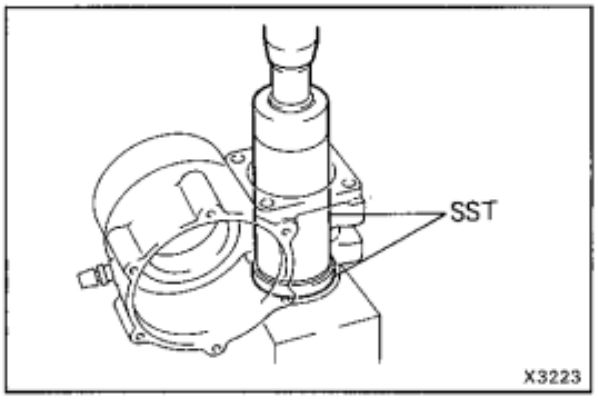

(g) Using SST and a press, press in a new outer race (gear case side).

SST 09316-60010 (09316-00010, 09316-00070)

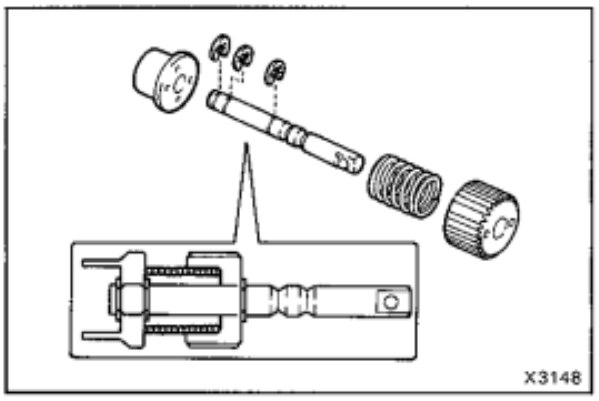

ASSEMBLY OF WINCH ASSEMBLY

(See page WI-21)

1. INSTALL CLUTCH HUB SHAFT

(a) Install the clutch hub, the spring and the brake hub to the clutch hub shaft with the three E-rings.

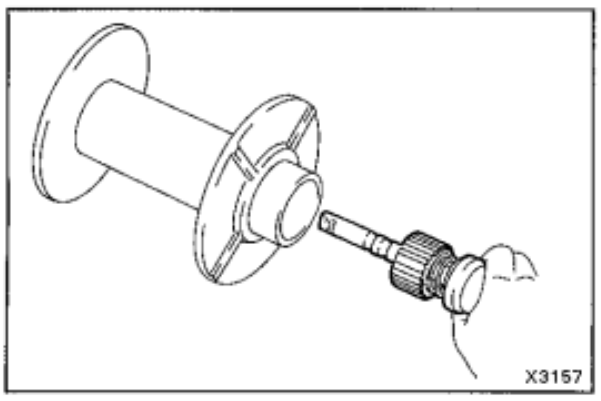

(b) Insert the clutch hub shaft into the winch drum from the winch end bracket side.

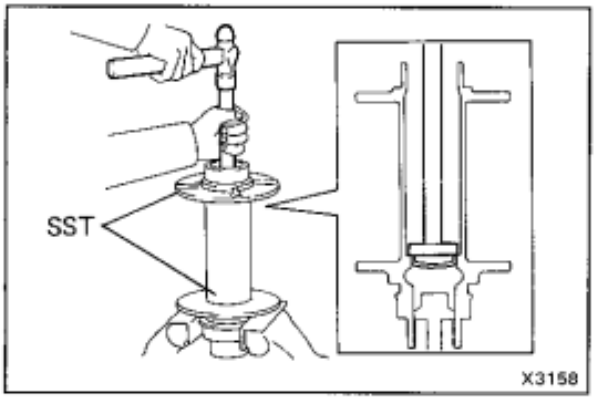

(c) Apply liquid sealer to a new tight plug.

Sealant: Part No. 08833-00070, THREE BOND 1324 or equivalent

(d) Using SST, install the tight plug.

SST 09608-35014 (09608-06100), 09631-12020

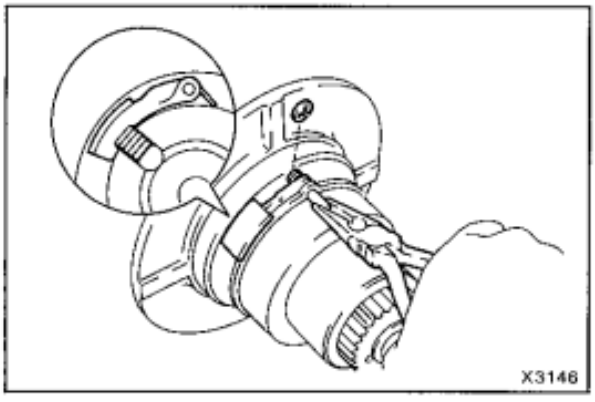

2. INSTALL WINCH BRAKE

(a) Install the two balls and the two springs to the winch drum.

(b) Align the spring with the notch of the winch brake, then install the two torsion springs and the two pins.

(c) Install the two E-rings.

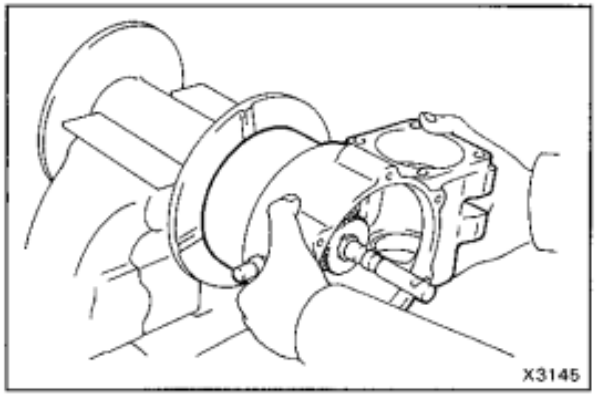

3. INSTALL WINCH GEAR CASE

Install the winch gear case to the winch drum.

HINT: Be careful not to damage the oil seal lip.

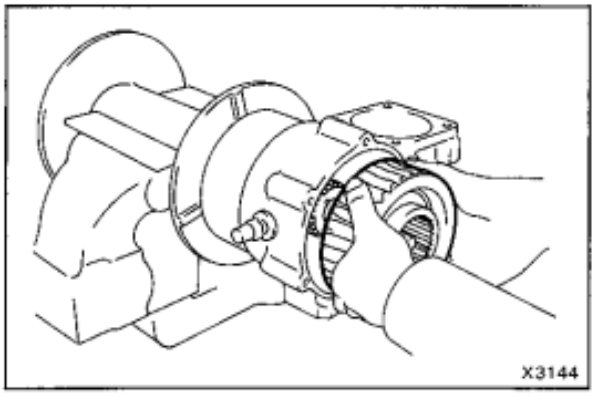

4. INSTALL WORM GEAR

Install the worm gear to the winch drum.

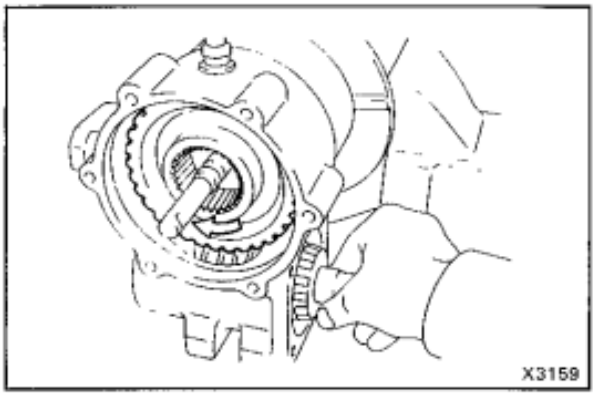

5. INSTALL WINCH WORM

(a) Install the winch worm to the worm gear.

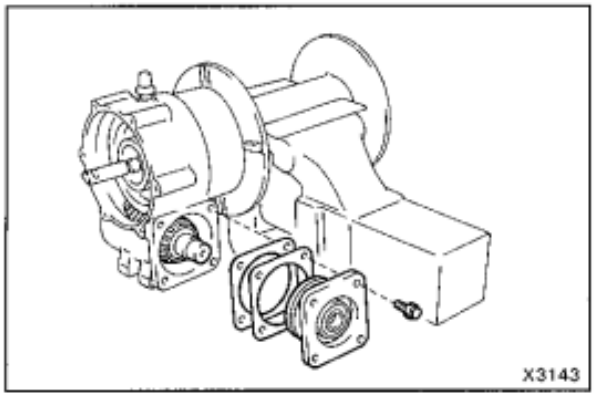

(b) Install a new O-ring to the worm bearing retainer.

(c) Install the adjusting shims and the worm bearing retainer with the four bolts. Torque the four bolts.

Torque: 250 kg-cm (18 ft-lb, 25 N·m)

HINT: Be careful not to damage the O-ring.

(d) Rocking the worm to and from, check for looseness or tightness.

(e) If necessary, exchange the shims for the correct sized shims with reference to the table.

Shim thickness: 0.228 mm (0.0090 in.)
0.5 mm (0.020 in.)
1.0 mm (0.039 in.)

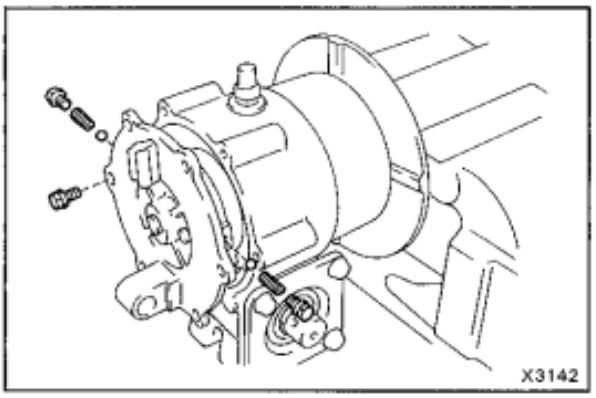

6. INSTALL WINCH GEAR CASE COVER

(a) Install a new O-ring to the gear case cover.

(b) Install a new gasket to the gear case.

(c) Insert the gear case cover about 30 mm (1.18 in.) in the clutch hub shaft and install two springs with two bolts.

Torque: 115 kg-cm (8 ft-lb, 11 N·m)

HINT: Be careful not to damage the O-ring.

(d) Install the gear case cover with the six bolts.

Torque: 120 kg-cm (9 ft-lb, 12 N·m)

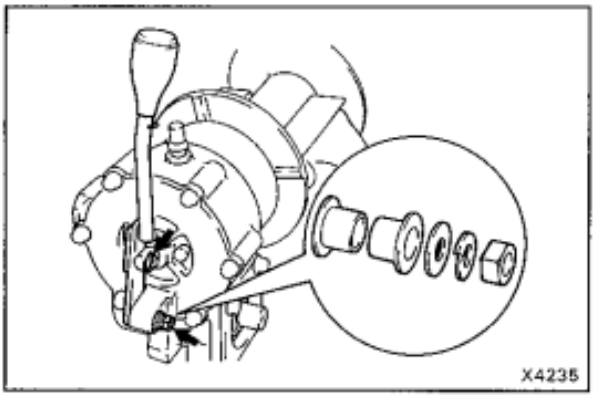

7. INSTALL SHIFT LOCK LEVER

(a) Install two bushings to the shift lock lever.

(b) Install the E-ring, plate washer, spring washer and nut to the shift lock lever.

Torque: 120 kg-cm (9 ft-lb, 12 N·m)

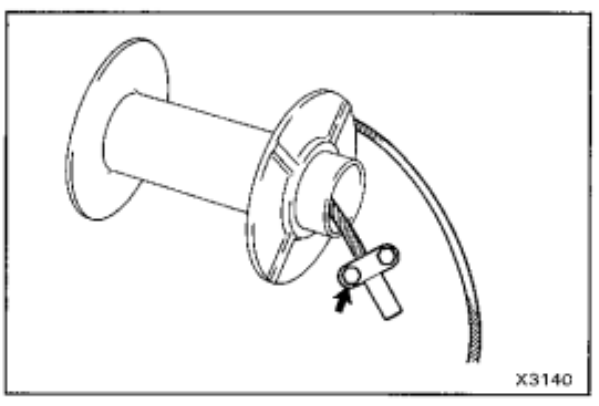

8. INSTALL WINCH WIRE

(a) Insert the winch wire into the wire installation hole of the drum and drum housing cover hole.

(b) Install the wire lock and lock plate to the end of winch wire with the two bolts, two spring washers and the two nuts. Torque the bolts.

Torque: 120 kg-cm (9 ft-lb, 12 N·m)

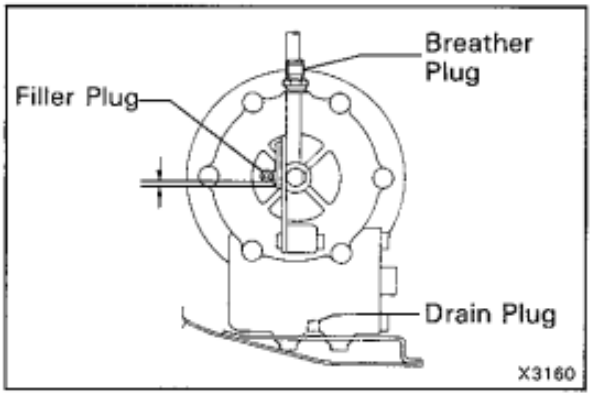

9. INSTALL WINCH END BRACKET

10. FILL WINCH WITH GEAR OIL

(a) Install the drain plug.

Torque: 175 kg-cm (13 ft-lb, 17 N·m)

(b) Remove the filler plug and the breather plug.

(c) Fill the winch with gear oil until the distance between the filler plug hole and fluid surface becomes less than 5 mm (0.2 in.)

Oil grade: API GL-4
SAE 85W-90

Capacity: 0.3 liters (0.32 US qts, 0.26 Imp.qts)

(d) Install the filler plug and torque it.

Torque: 175 kg-cm (13 ft-lb, 17 N·m)

(e) Install the breather plug and torque it.

Torque: 200 kg-cm (15 ft-lb, 20 N·m)

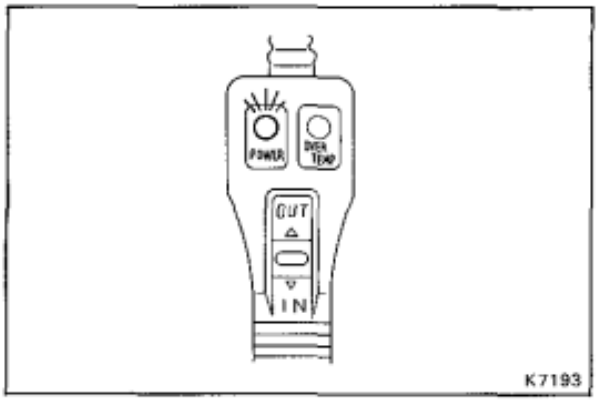

K7193

ELECTRIC WINCH

On-Vehicle Inspection

INSPECTION OF WINCH REMOTE CONTROL SWITCH

1. **CONNECT WINCH CONTROL SWITCH CONNECTOR**

2. **INSPECT WINCH CONTROL SWITCH**

   (a) *The power indicator light will light when the winch* turns ignition switch ON.

   (b) Operate winch control switch, confirm winch function.

   HINT: Be careful not to tighten or strain the winch wire.

   (c) Turn ignition switch OFF.

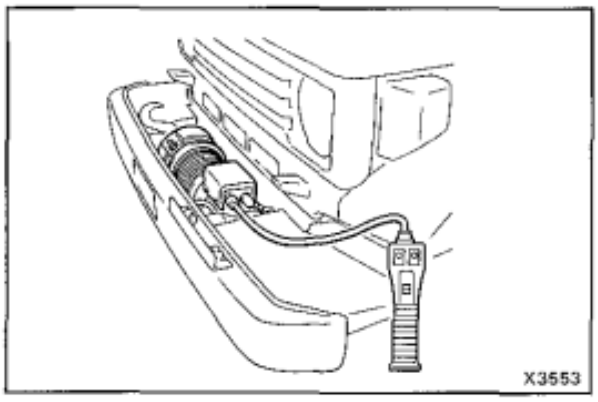
X3553

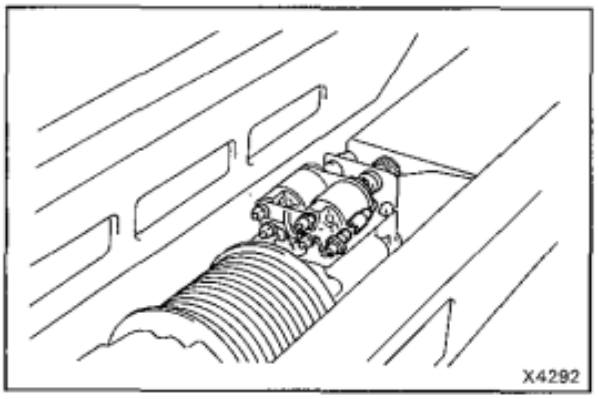
X4292

3. **INSPECT OVERHEAT TEMPERATURE INDICATOR**

   (a) *Remove the four screws and the cover.*

   (b) Disconnect the connector of magnet switch No.2.

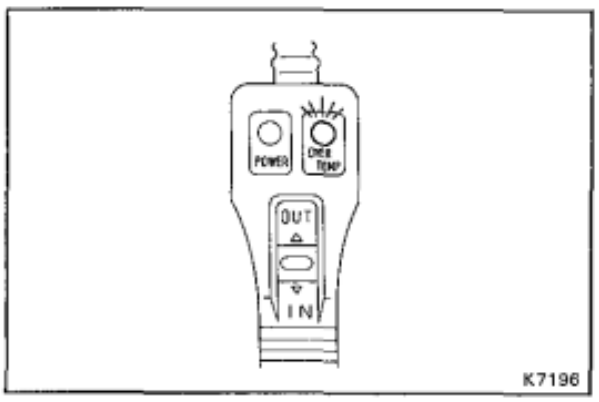

K7196

   (c) When ignition switch ON, the overheat temperature indicator light will light and buzzer sound.

   (d) Turn ignition switch OFF.

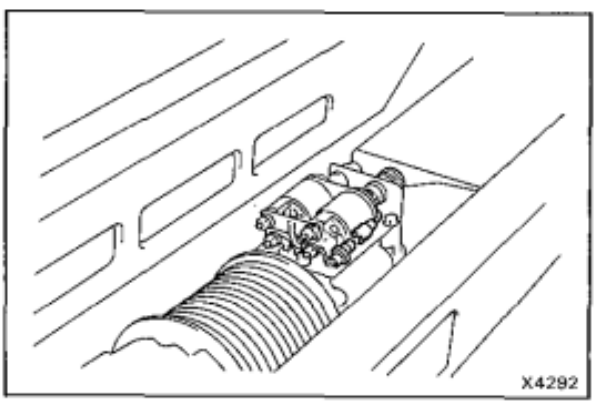
X4292

   (e) Connect the connector.

   (f) Install the four screws and the cover.

4. **DISCONNECT WINCH CONTROL SWITCH CONNECTOR**

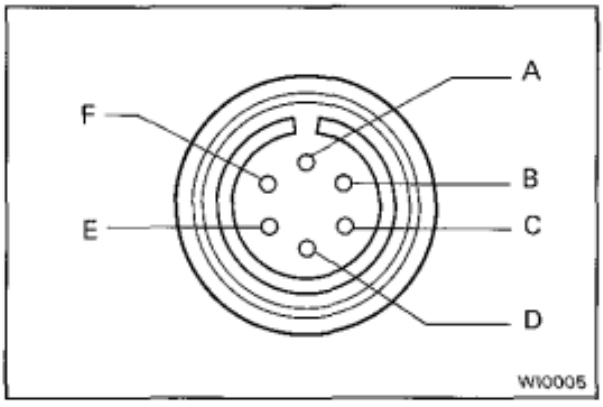

5. CHECK WINCH REMOTE CONTROL SWITCH CIRCUIT

Check that there is continuity between terminals.

SW Position \ Terminal	A	B	C	D	E	F
NEUTRAL	○	○				
		○	○			
		○			○	
IN		○	○			
		○		○		
OUT		○	○			
		○				○

If there is no continuity, replace the remote control switch.

Removal and Installation of Winch Assembly

Remove and install the parts as shown.

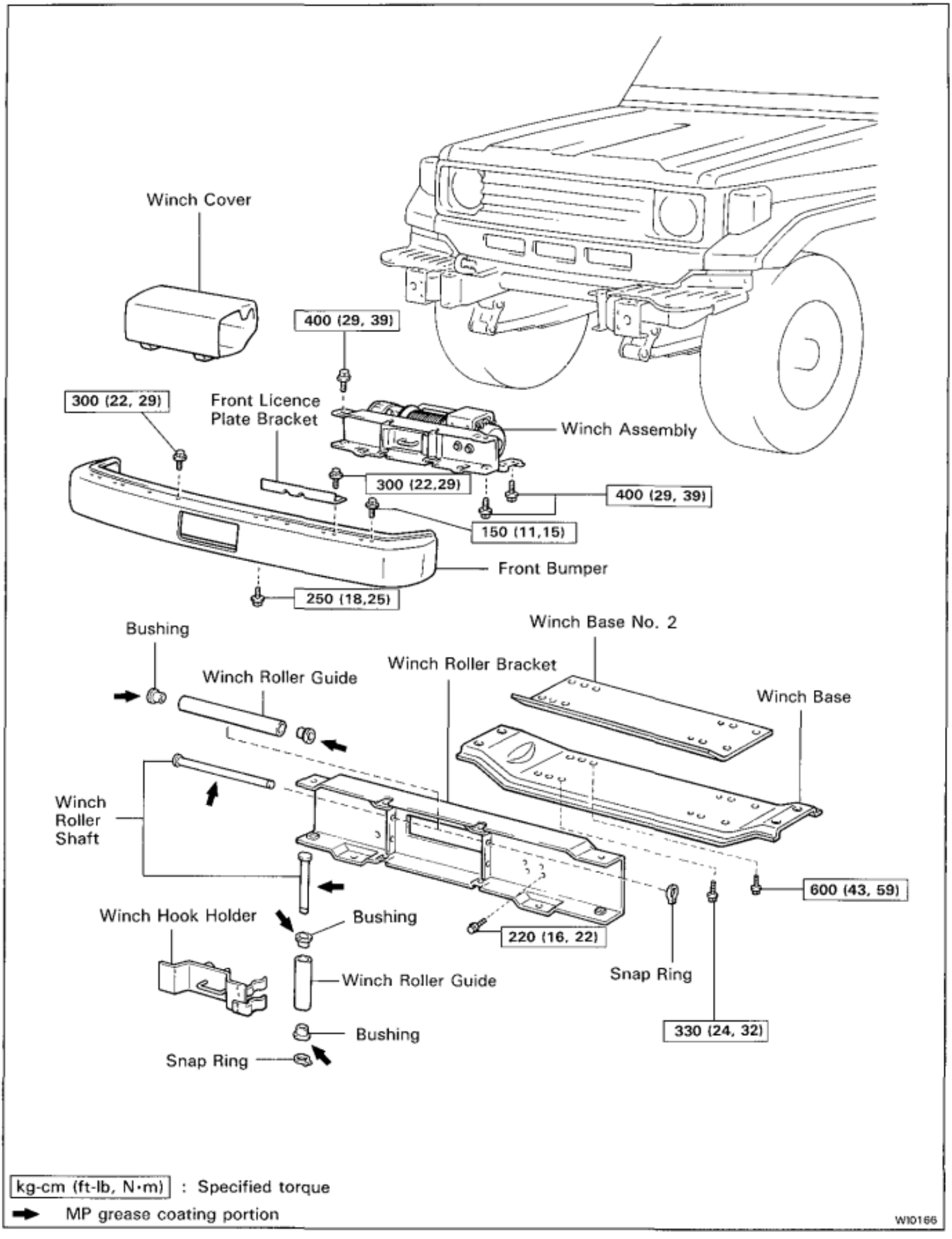

kg-cm (ft-lb, N·m) : Specified torque

➡ MP grease coating portion

WI0166

Winch Assembly

COMPONENTS

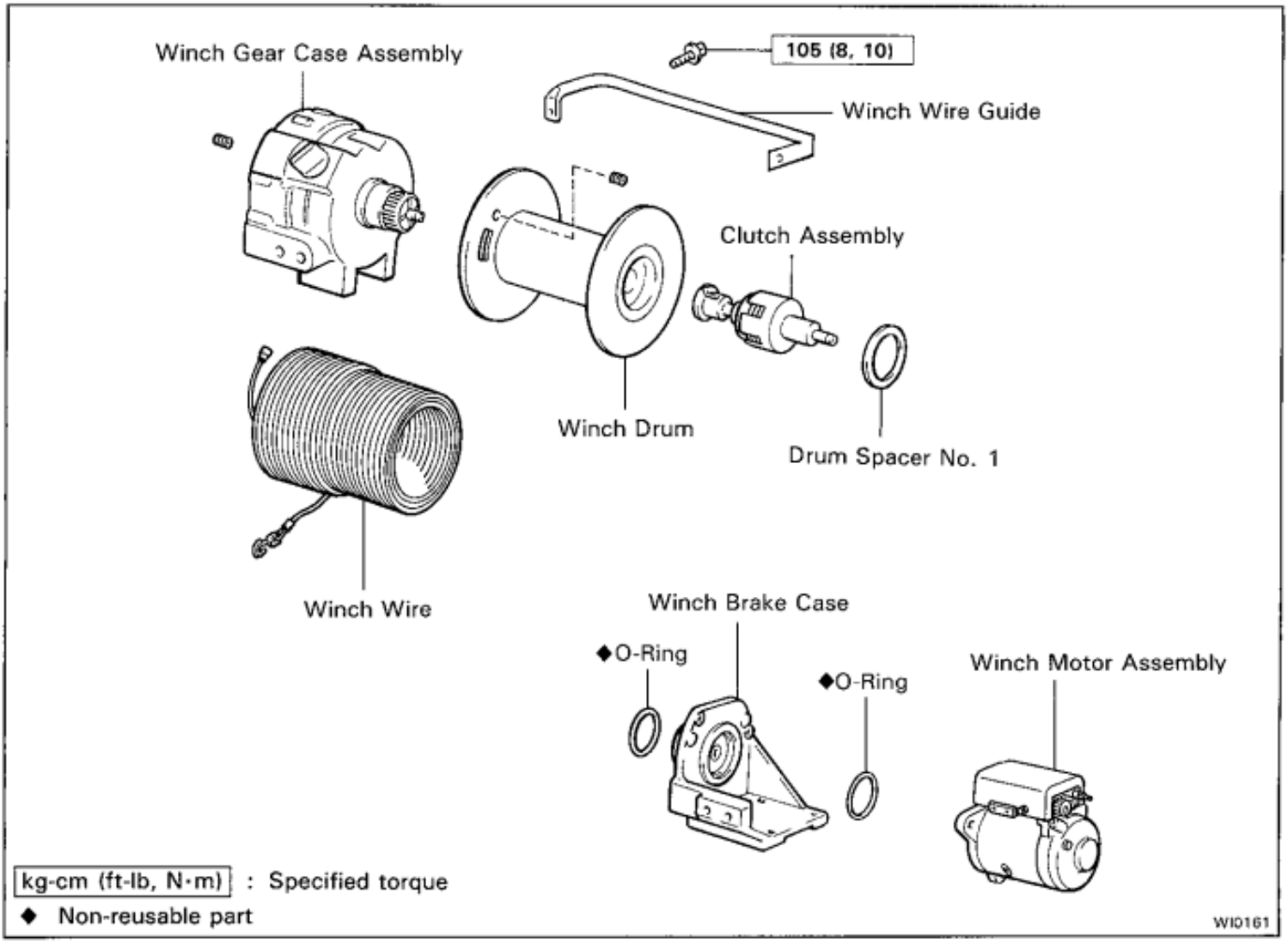

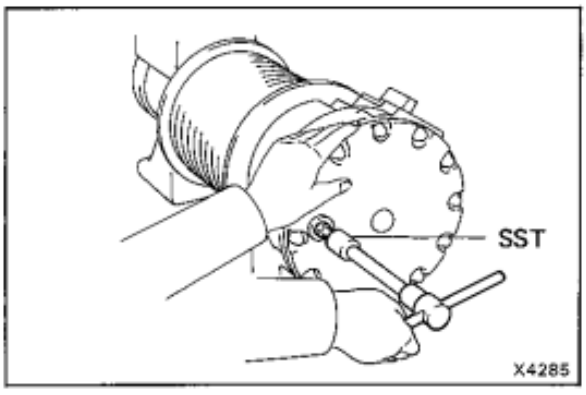

REMOVAL OF WINCH ASSEMBLY

1. **DRAIN WINCH FLUID**
   (a) Using SST, remove the drain plug.
   SST 09313-30021
   (b) Drain the winch fluid.
2. **REMOVE WINCH WIRE GUIDE**

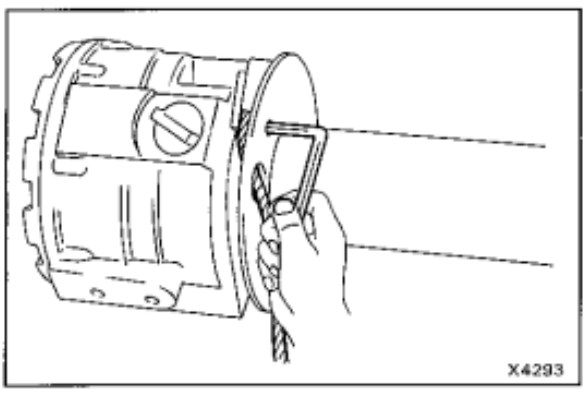

3. **REMOVE WINCH WIRE**
   (a) Shift the shift lever to the neutral position.
   (b) Pull out the winch wire from the drum.
   (c) Using a hexagon wrench, remove the bolt.
   (d) Remove the winch wire.

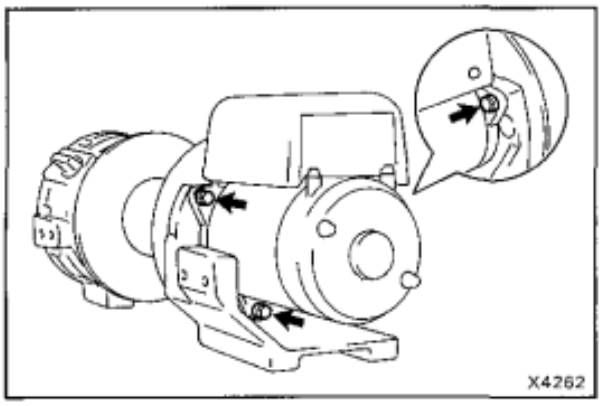

4. REMOVE WINCH MOTOR ASSEMBLY

Remove the three bolts, the winch motor assembly and the O-ring.

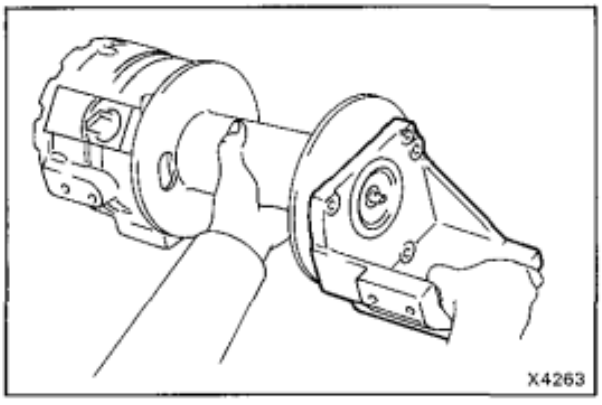

5. REMOVE WINCH BRAKE CASE

Remove winch brake case, the O-ring and drum spacer No.1.

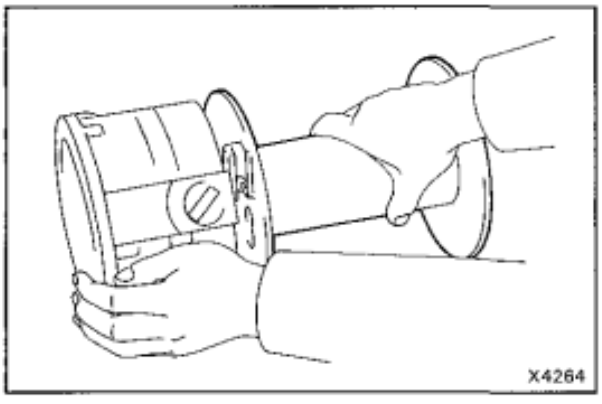

6. REMOVE WINCH DRUM

(a) Remove the clutch assembly.

(b) Remove the winch drum from the gear case assembly.

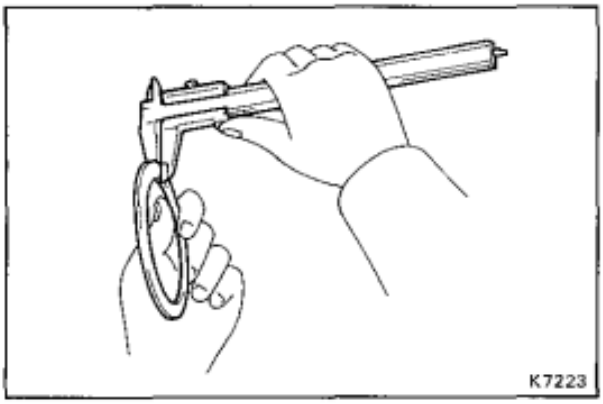

INSPECTION OF WINCH ASSEMBLY

1. INSPECT DRUM SPACER NO.1

Using calipers, measure the thickness of drum spacer No.1.

Standard bore: 1.4 mm (0.0551 in.)

Minimum bore: 1.0 mm (0.0394 in.)

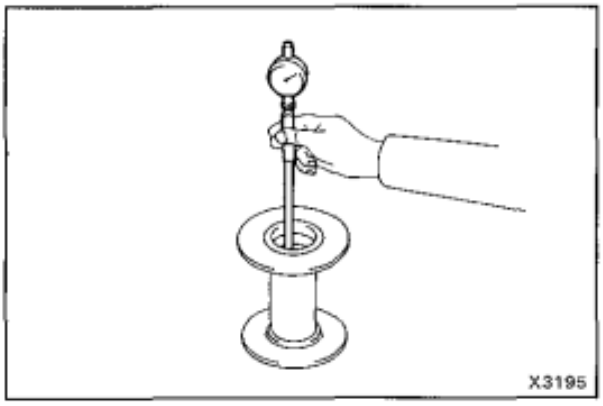

2. INSPECT WINCH DRUM

Using a cylinder gauge, measure the each side bushing bore.

Standard bore: 64.20 mm (2.5276 in.)

Maximum bore: 64.36 mm (2.5339 in.)

INSTALLATION OF WINCH ASSEMBLY

(See page WI-34)

1. COAT MP GREASE ON FOLLOWING PARTS:

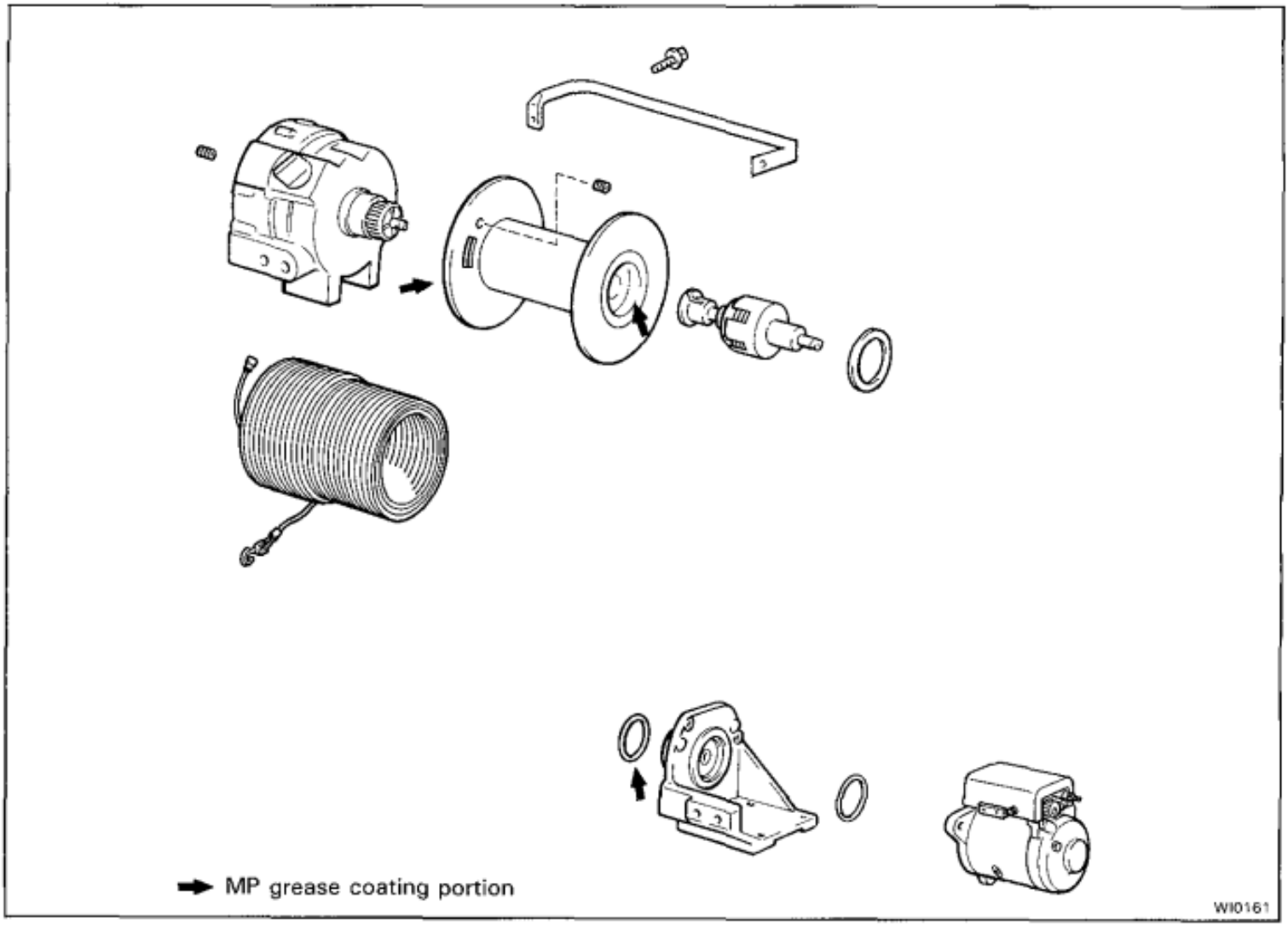

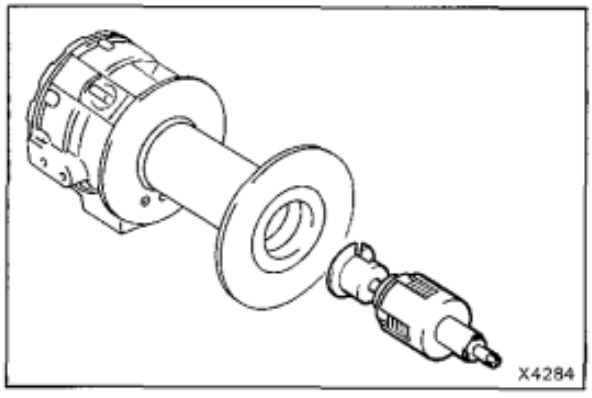

2. INSTALL WINCH DRUM
   (a) Install the winch drum to the gear case.
   (b) Install the clutch assembly.

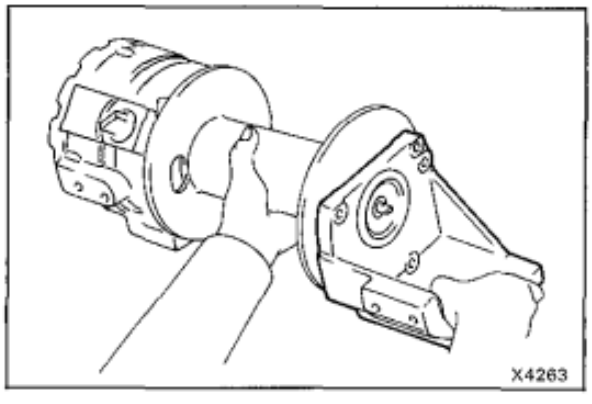

3. INSTALL WINCH BRAKE CASE

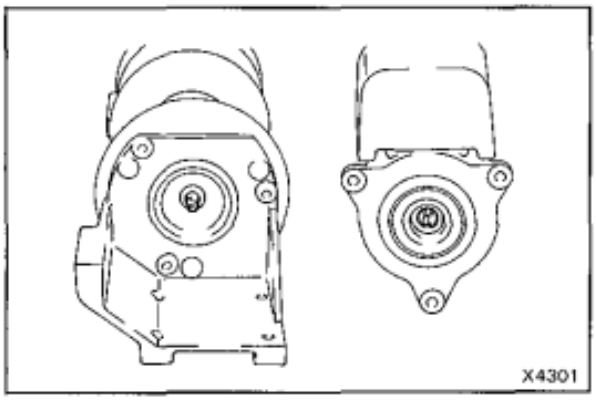

4. **INSTALL WINCH MOTOR ASSEMBLY**

(a) Align the groove and the tip of the input shaft.

(b) Torque the three bolts.

Torque: 400 kg-cm (29 ft-lb, 39 N·m)

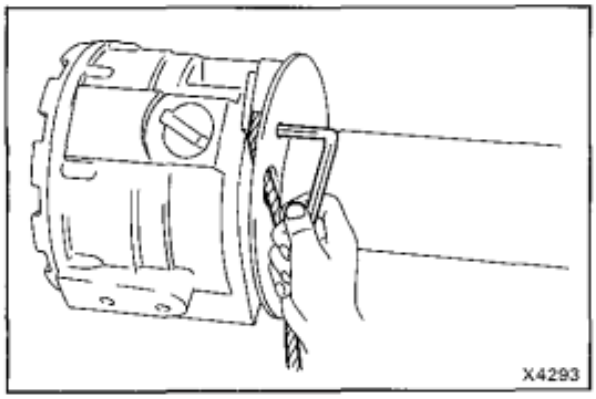

5. **INSTALL WINCH WIRE**

(a) Install the winch wire to the winch drum.

(b) Using a hexagon wrench, install the bolt.

Torque: 10 kg-cm (9 in.-lb, 1.0 N·m)

(c) Wind the winch wire around the winch drum.

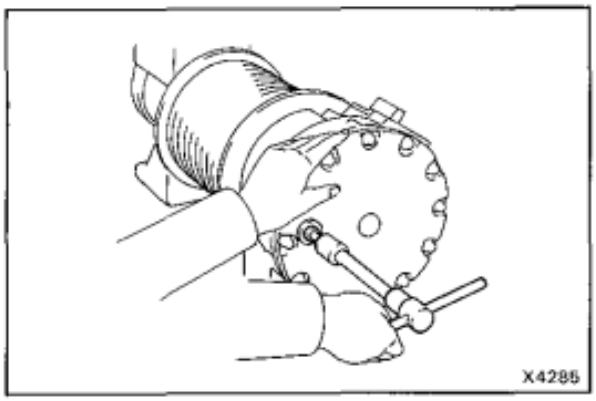

6. **FILL WINCH WITH AUTOMATIC TRANSMISSION FLUID**

Fill the winch with automatic transmission fluid and torque the drain plug.

Torque: 175 kg-cm (13 ft-lb, 17 N·m)
Oil grade: ATF Type F
Capacity: 0.9 liters (0.95 US qts, 0.79 Imp.qts)

7. **WINCH WIRE GUIDE**

Winch Components

COMPONENTS

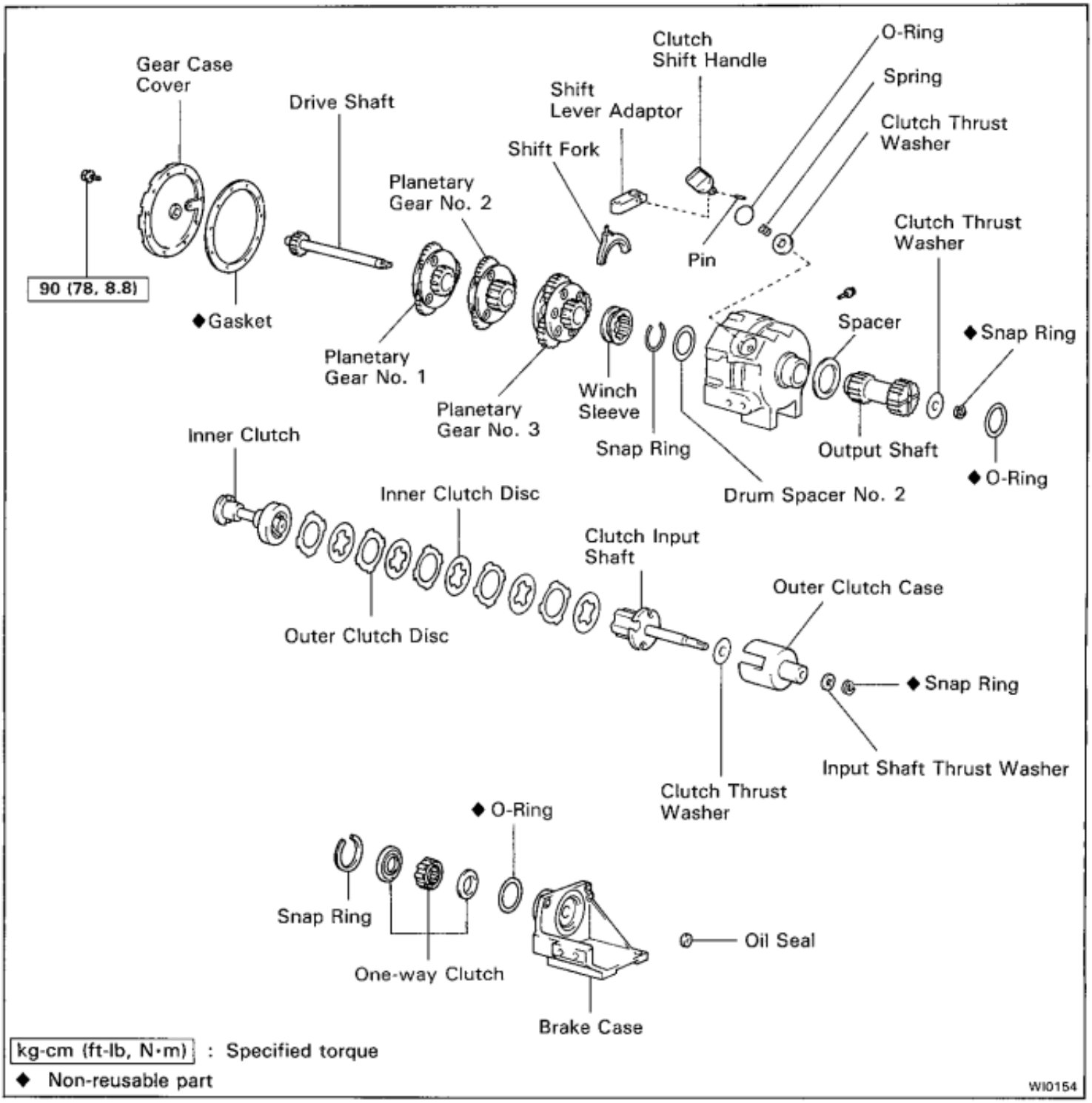

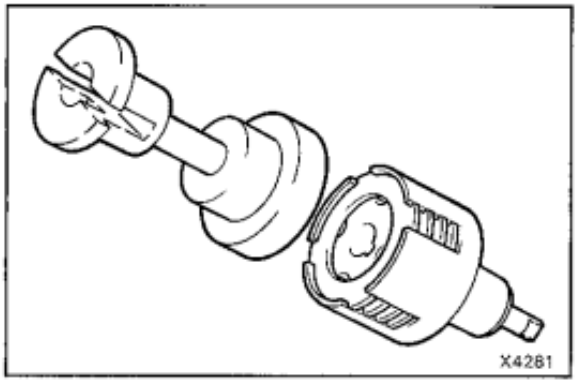

DISASSEMBLY OF WINCH COMPONENTS

1. **REMOVE INNER CLUTCH, CLUTCH DISCS FROM OUTER CLUTCH**

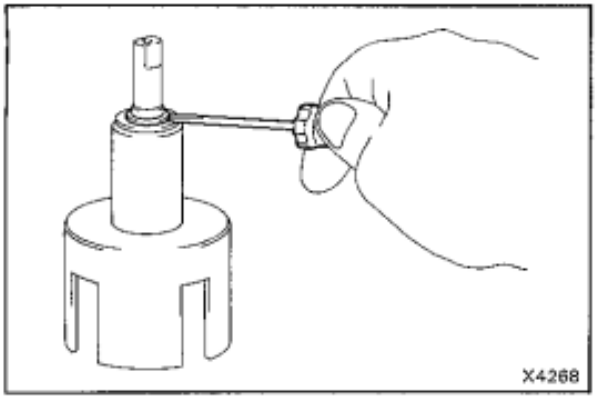

2. REMOVE OUTER CLUTCH

(a) Using a screwdriver, remove the snap ring.

(b) Remove the thrust washer.

(c) Remove the clutch input shaft and thrust washer.

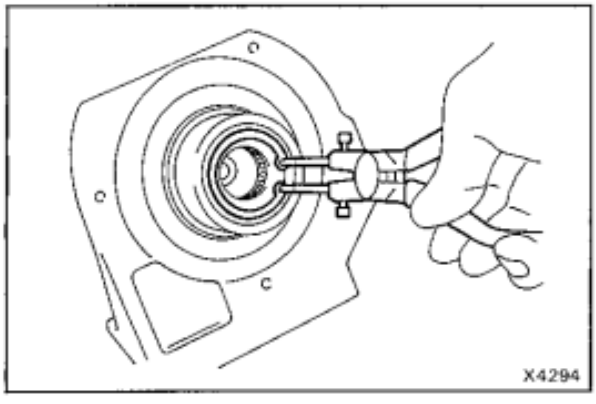

3. REMOVE ONE-WAY CLUTCH FROM BRAKE CASE

(a) Using snap ring pliers, remove the snap ring.

(b) Remove the one-way clutch.

(c) Remove the O-ring.

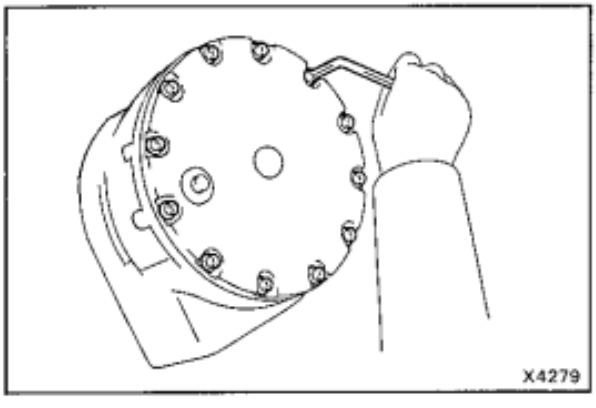

4. REMOVE GEAR CASE COVER

Using a hexagon wrench, remove the gear case cover and gasket.

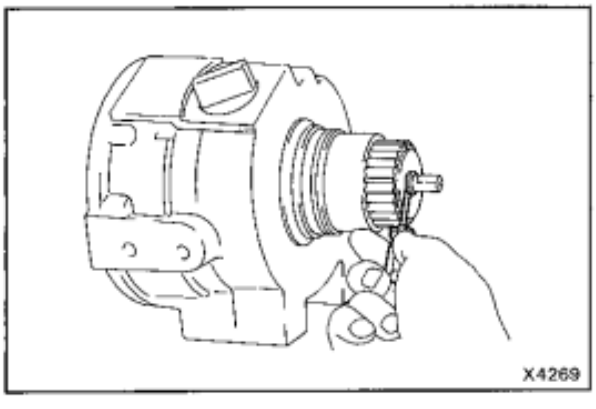

5. REMOVE PLANETARY GEAR NO.1, NO.2, NO.3 AND DRIVE SHAFT

(a) Using a screwdriver, remove the snap ring.

(b) Remove the thrust washer.

(c) Remove the O-ring.

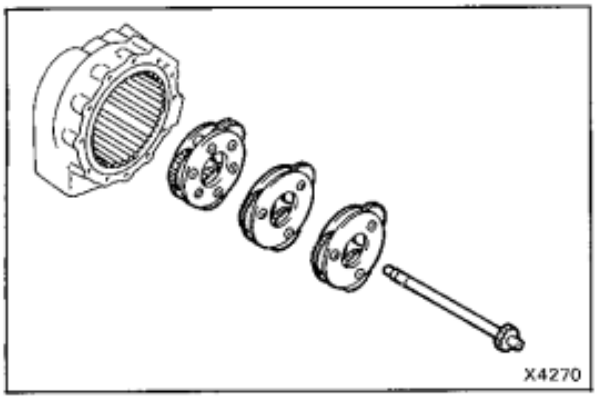

(d) Pull out the drive shaft, and remove the planetary gear No.1, No.2 and No.3.

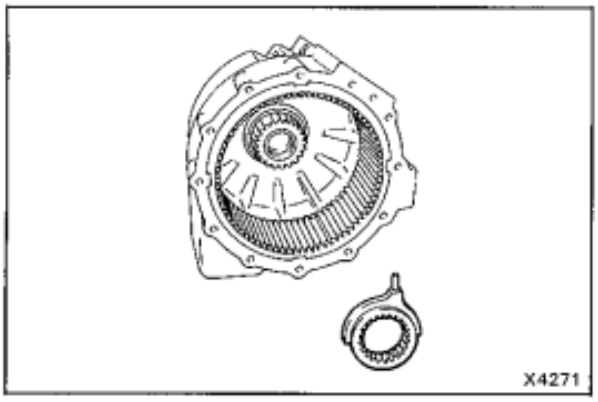

6. REMOVE WINCH SLEEVE WITH SHIFT FORK

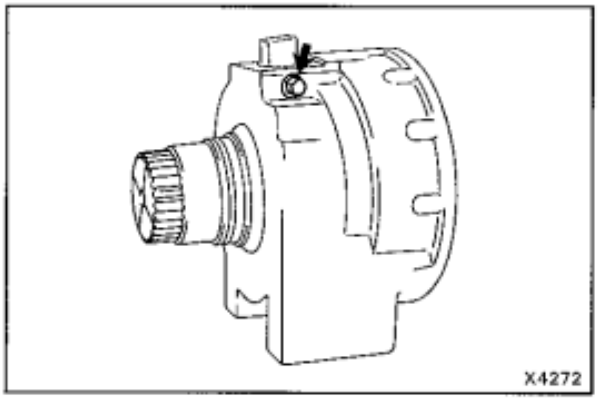

7. REMOVE CLUTCH SHIFT HANDLE

(a) Remove the bolt and washer.

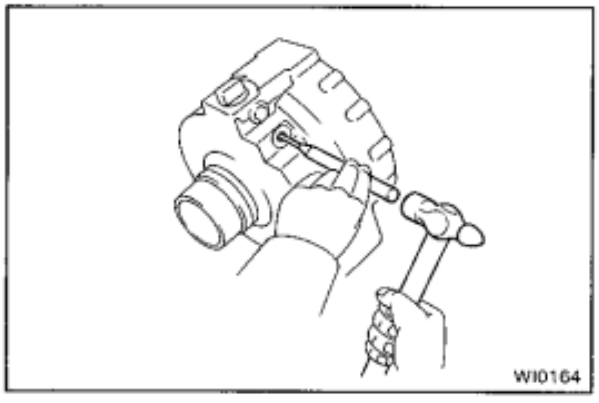

(b) Using a pin punch and a hammer, drive out the pin.

(c) Remove the shift lever adaptor.

(d) Remove the clutch shift handle.

(e) Remove the thrust washer, spring and O-ring.

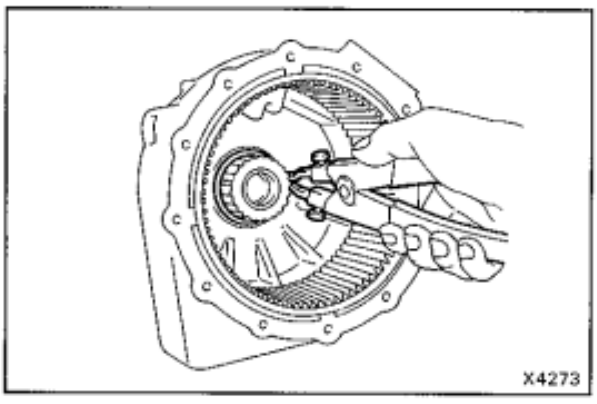

8. REMOVE OUTPUT SHAFT

(a) Using snap ring pliers, remove the snap ring and drum spacer No.2.

(b) Remove the output shaft and spacer.

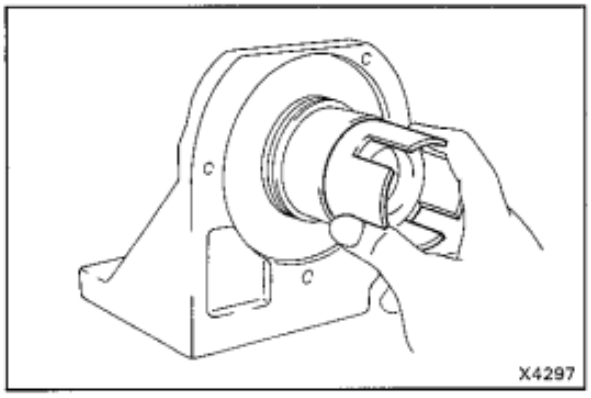

INSPECTION AND REPLACEMENT OF WINCH COMPONENTS

1. INSPECT ONE-WAY CLUTCH

(a) Install one-way clutch.
(See page WI-48)

(b) Install the outer clutch and turn it. Then the outer clutch turns freely counterclockwise and locks clockwise.

(c) If necessary, replace the one-way clutch.

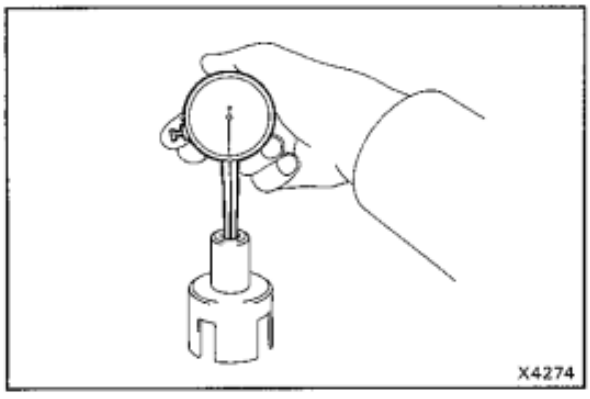

2. INSPECT OUTER CLUTCH

(a) Using a caliper gauge, measure the bushing bore.

Standard bore: 12.00 mm (0.4724 in.)
Maximum bore: 12.03 mm (0.4736 in.)

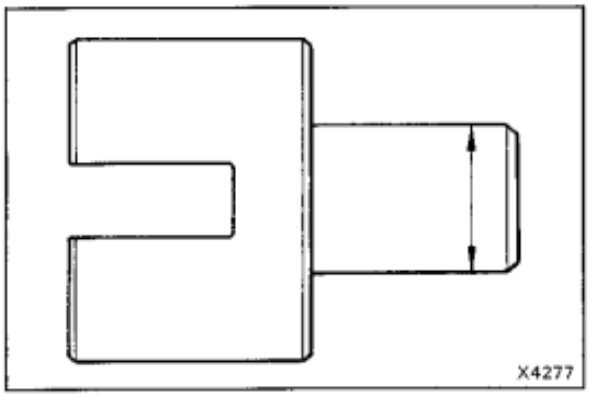

(b) Inspect the outer clutch for wear or damage.

If necessary, replace the drive shaft.

Standard outer diameter: 27.77 mm (1.0933 in.)

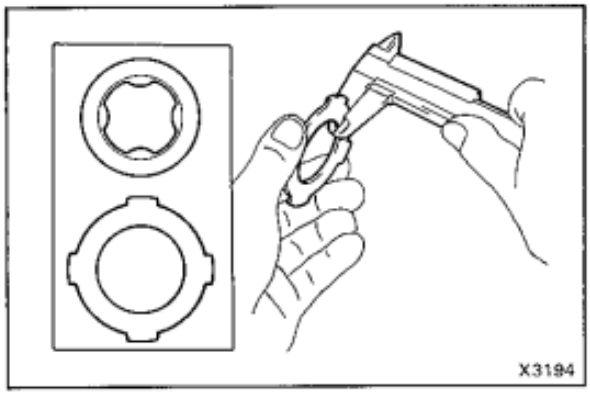

3. INSPECT CLUTCH OUTER DISC AND INNER DISC

Using calipers, measure the thickness of clutch outer disc and inner disc.

Outer disc:
Standard thickness: 1.60 mm (0.0630 in.)
Minimum thickness: 1.50 mm (0.0591 in.)

Inner disc:
Standard thickness: 2.30 mm (0.0906 in.)
Minimum thickness: 2.15 mm (0.0846 in.)

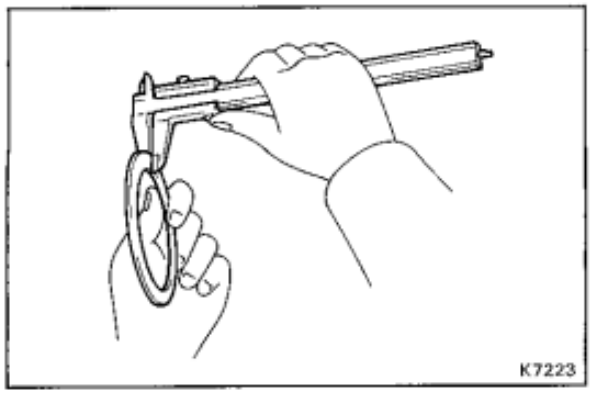

4. INSPECT DRUM SPACER NO.2

Using calipers, measure the thickness of drum spacer No.2.

Standard thickness: 1.4 mm (0.0551 in.)
Minimum thickness: 1.0 mm (0.0394 in.)

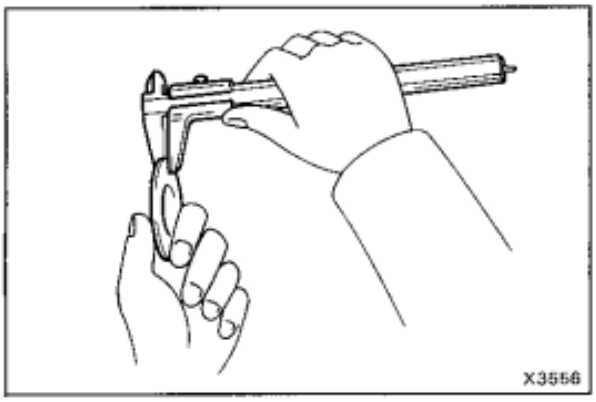

5. INSPECT INPUT SHAFT THRUST WASHER, CLUTCH THRUST WASHER

Using calipers, measure the thickness of thrust washers.

INPUT SHAFT THRUST WASHER

Standard thickness: 2.00 mm (0.0787 in.)
Minimum thickness: 1.80 mm (0.0709 in.)

CLUTCH THRUST WASHER

Standard thickness: 1.25 mm (0.0492 in.)
Minimum thickness: 1.00 mm (0.0394 in.)

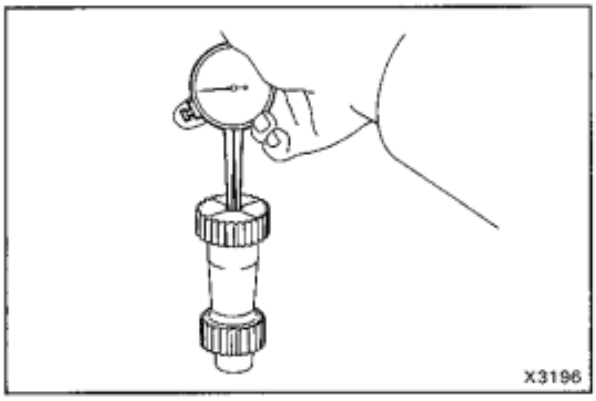

6. INSPECT OUTPUT SHAFT

(a) Using a caliper gauge, measure the bushing bore.

Standard bore: 12.00 mm (0.4724 in.)
Maximum bore: 12.03 mm (0.4736 in.)

(b) Using a caliper, measure the outer diameter of the bushing.

Standard diameter: 28.00 mm (1.1024 in.)
Minimum diameter: 27.90 mm (1.0984 in.)

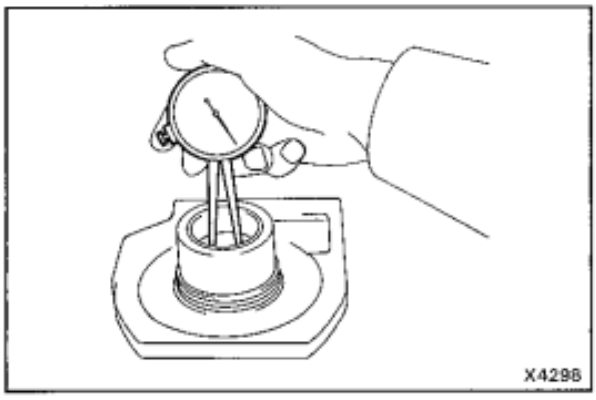

7. INSPECT BRAKE CASE

Using calipers, measure the bushing bore.

Standard bore: 27.76 mm (1.0929 in.)
Maximum bore: 27.82 mm (1.0953 in.)

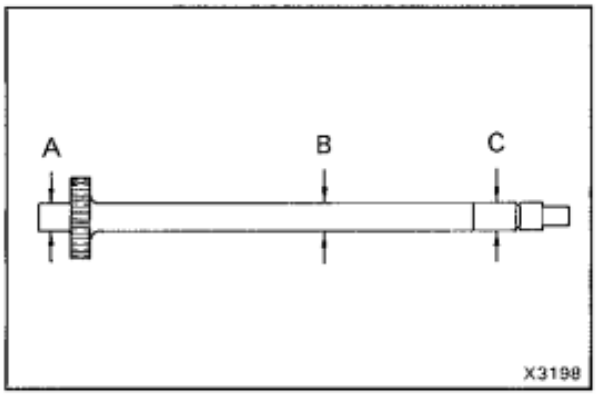

8. INSPECT DRIVE SHAFT

(a) Inspect the drive shaft for wear or damage the drive shaft.

(b) Using a micrometer, measure the outer diameter of the drive shaft.

Minimum outer diameter:

Part		
	A	11.86 mm (0.4669 in.)
	B	11.70 mm (0.4606 in.)
	C	11.95 mm (0.4705 in.)

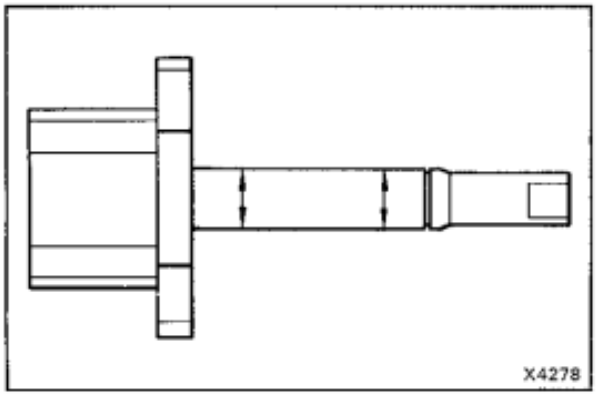

9. INSPECT CLUTCH INPUT SHAFT

Inspect clutch input shaft for wear or damage.
If damage, replace the clutch input shaft.

Standard outer diameter: 11.95 mm (0.4705 in.)

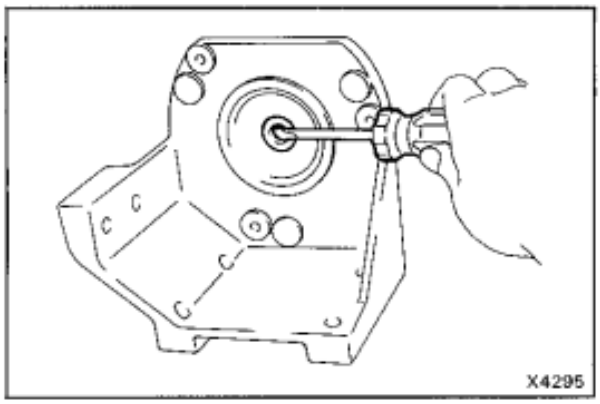

10. REPLACE WINCH BRAKE CASE OIL SEAL

(a) Using a screwdriver, pry out the oil seal.

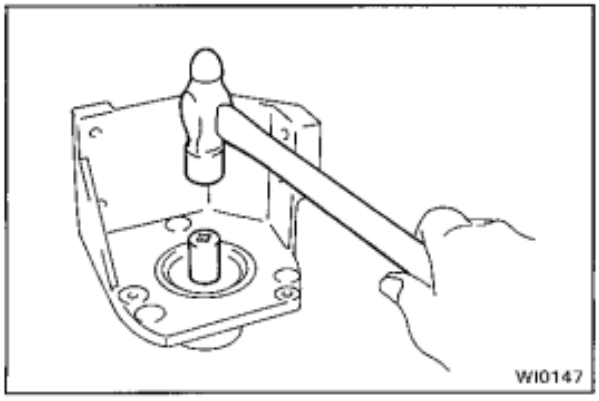

(b) Using a socket wrench, install the oil seal.

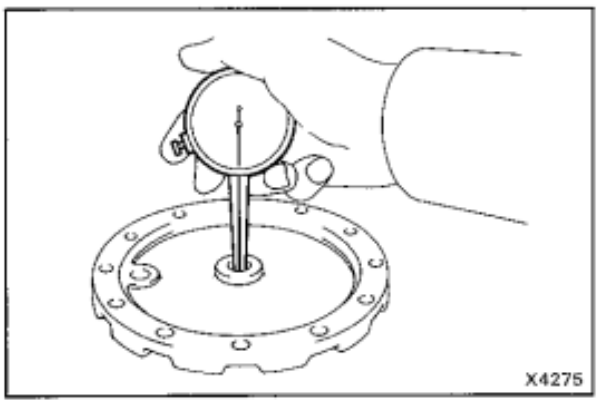

11. INSPECT WINCH GEAR CASE COVER

Using a caliper gauge, measure the bushing bore.

Standard bore: 12.00 mm (0.4724 in.)
Maximum bore: 12.15 mm (0.4783 in.)

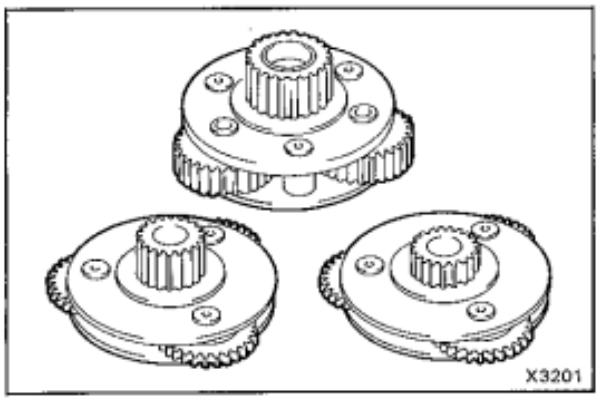

12. INSPECT PLANETARY GEAR NO.1, NO.2 AND NO.3

(a) Check that the bearing rotates smoothly.

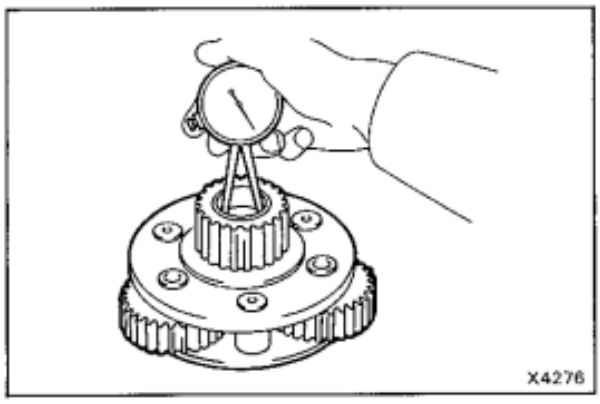

(b) Using a caliper gauge, measure the bushing bore of the planetary gear No.3.

Standard bore: 28.00 mm (1.1024 in.)
Maximum bore: 28.05 mm (1.1043 in.)

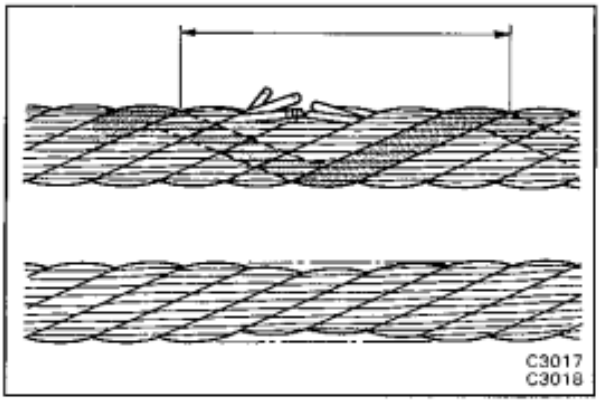
C3017
C3018

13. INSPECT WINCH WIRE

Inspect the winch wire for the following items.
If damage, replace the winch wire.

- Wire than 12 severed strands per wind.
- Wire diameter of less than 7.5 mm (0.295 in.)

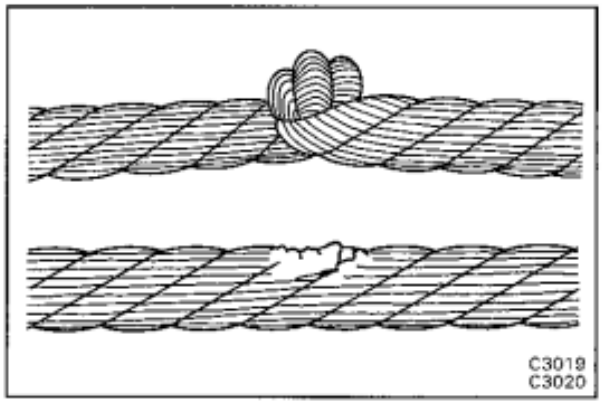
C3019
C3020

- Kinks
- Corrosion
- Fraying

ASSEMBLY OF WINCH COMPONENTS

(See page WI-39)

1. COAT MP GREASE ON FOLLOWING PARTS:

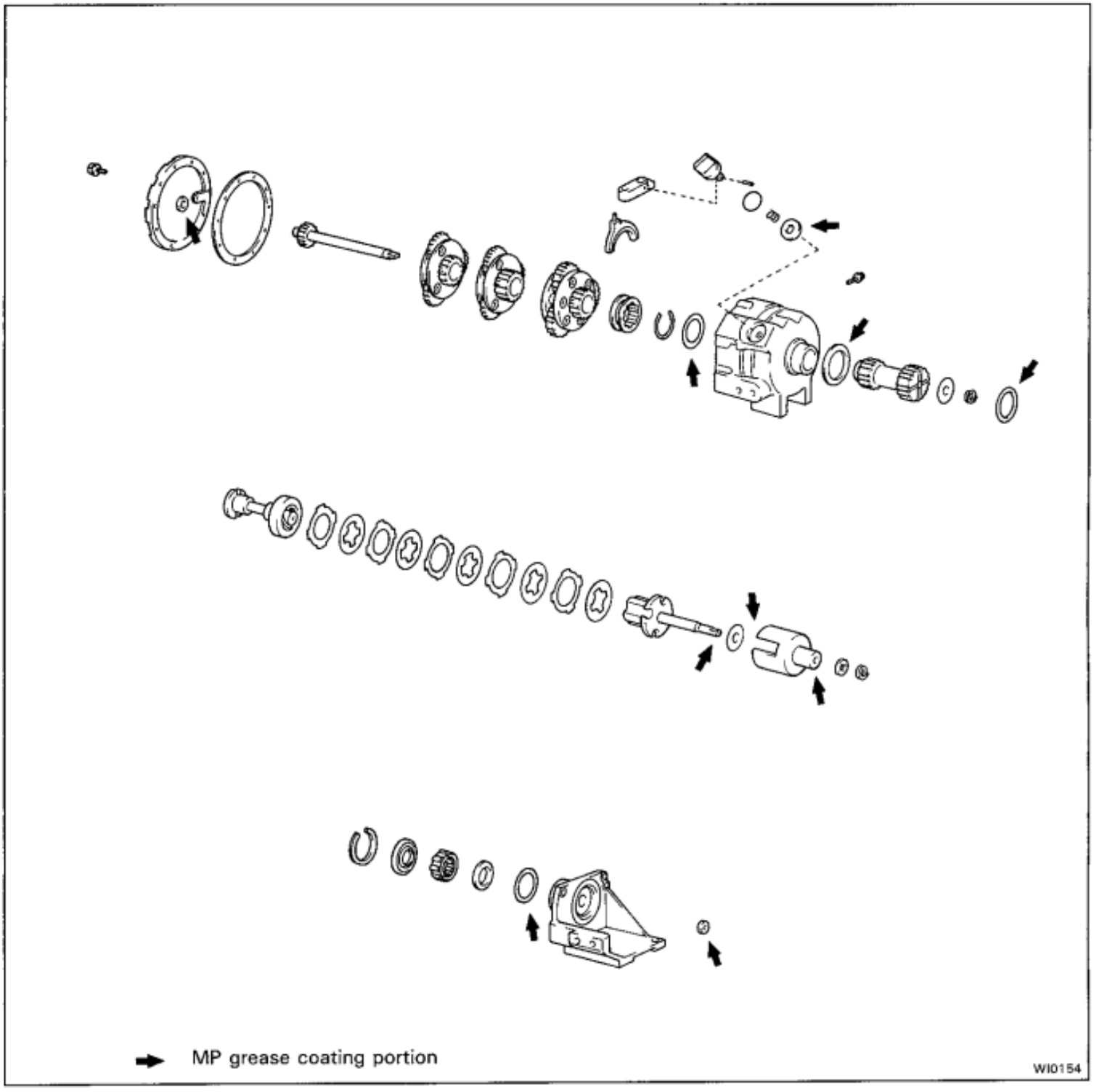

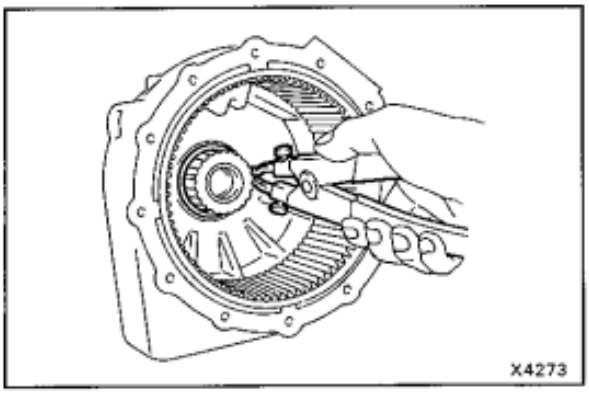

2. INSTALL OUTPUT SHAFT
   (a) Install output shaft to the gear case.
   (b) Using snap ring pliers, install the snap ring.

3. INSTALL CLUTCH SHIFT LEVER
   (a) Install a new O-ring, the spring and the thrust washer.
   (b) Install the shift lever adaptor.
   (c) Install the clutch shift lever.

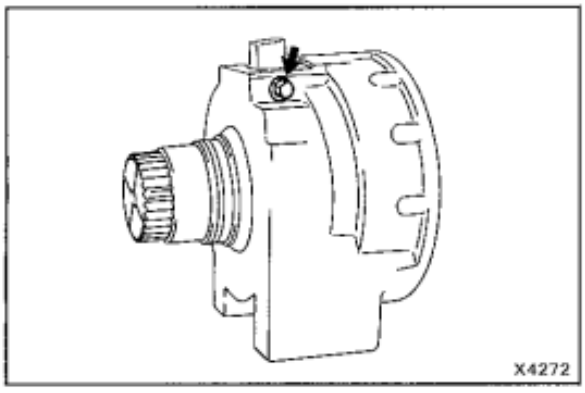

(d) Install the bolt and washer.

Torque: 45 kg-cm (39 in.-lb, 4.4 N·m)

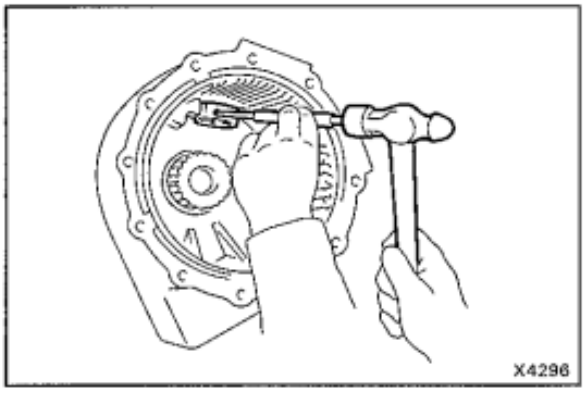

(e) Using a pin punch and a hammer, drive in the pin.

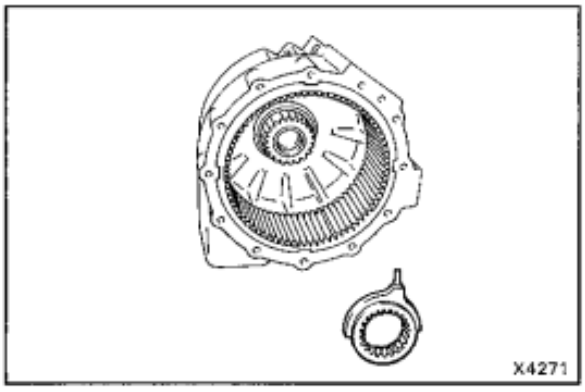

4. INSTALL WINCH SLEEVE WITH SHIFT FORK

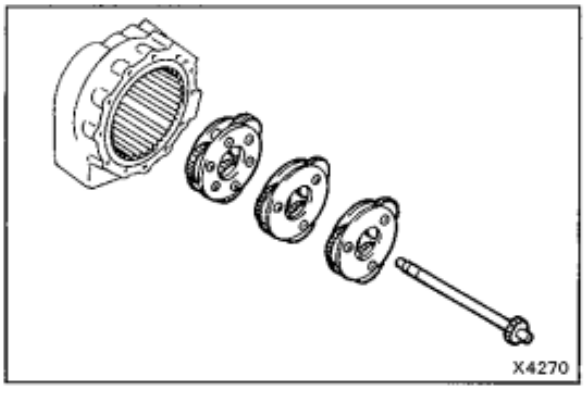

5. INSTALL PLANETARY GEAR NO.3, NO.2, NO.1 AND DRIVE SHAFT

(a) Coat the each gear with ATF.

Fluid type: ATF DEXRON® II

(b) Install the planetary gear No.3, No.2, No.1 and the drive shaft.

(c) Install a new O-ring.

(d) Install the thrust washer.

(e) Install the snap ring.

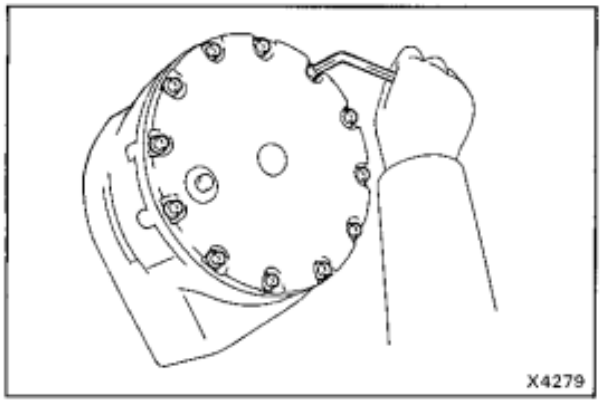

6. INSTALL GEAR CASE COVER

Using a hexagon wrench, install a new gasket and the gear case cover.

Torque: 90 kg-cm (78 in.-lb, 8.8 N·m)

7. INSTALL ONE-WAY CLUTCH

(a) Install a new O-ring.

(b) Install the one-way clutch.

(c) Coat the one-way clutch with ATF.

Fluid type: ATF DEXRON® II

HINT: Install in proper direction only.

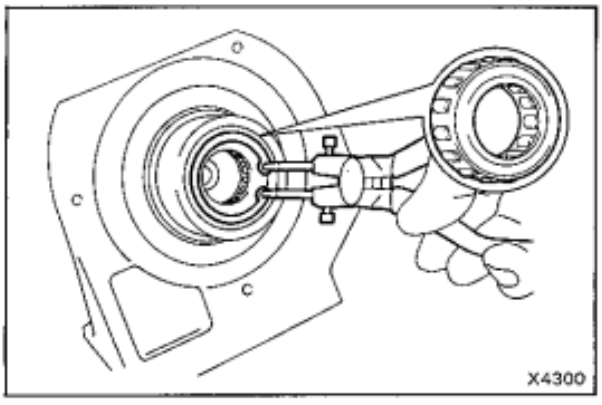

(d) Using snap ring pliers, install the snap ring.

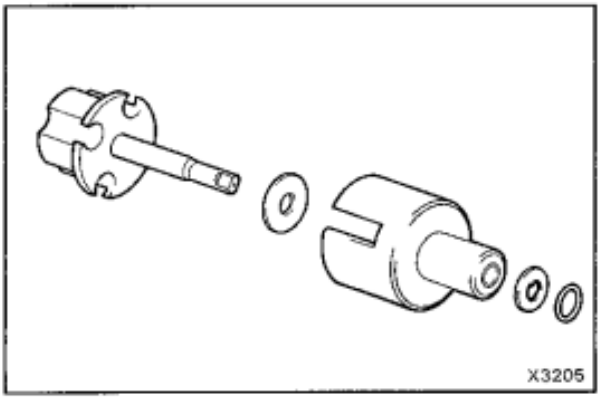

8. INSTALL OUTER CLUTCH

(a) Install the clutch input shaft and thrust washer to the outer clutch.

(b) Install the input shaft thrust washer and the snap ring.

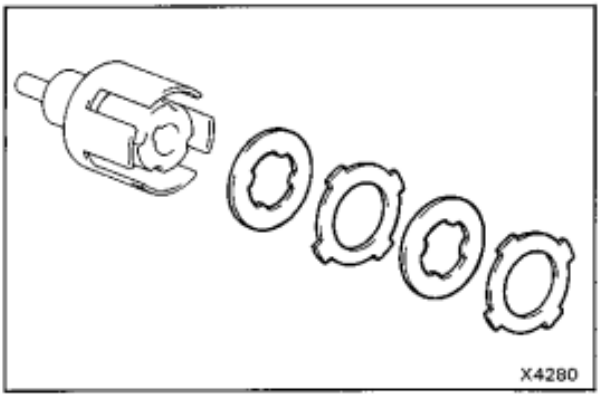

(c) Install the inner disc and the outer disc to the outer clutch.

HINT: Before assembly new clutch discs, soak them in automatic transmission fluid for at least two hours.

Fluid type: ATF DEXRON® II

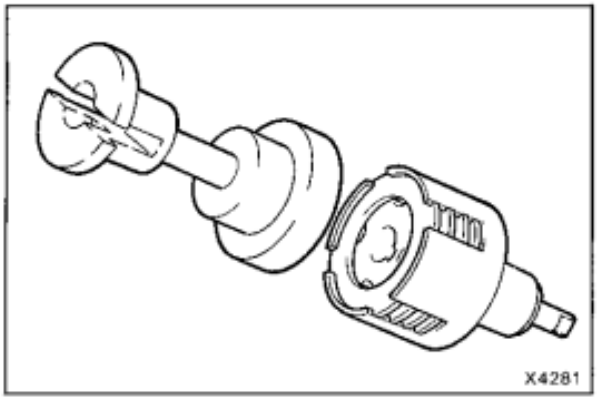

(d) Install the inner clutch.

HINT: Coat the threads of the inner clutch with ATF and install inner clutch.

Winch Motor

COMPONENTS

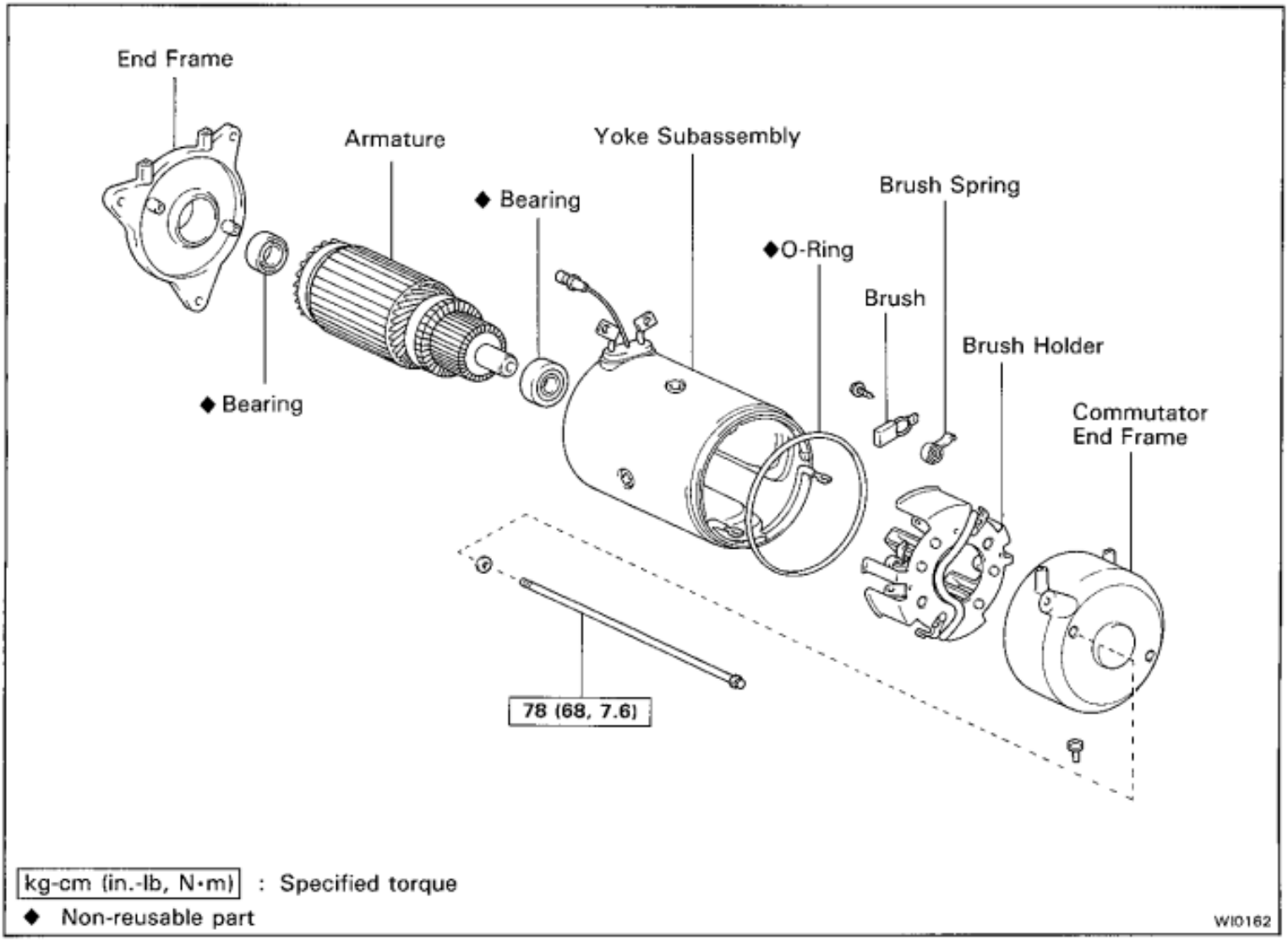

kg-cm (in.-lb, N•m) : Specified torque
◆ Non-reusable part

WI0162

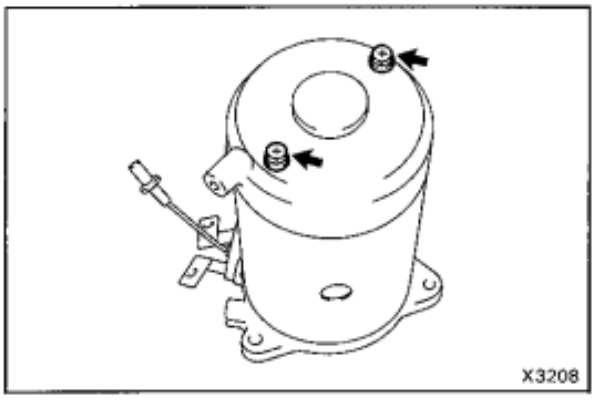

DISASSEMBLY OF WINCH MOTOR

1. REMOVE COMMUTATOR END FRAME

(a) Remove the two bolts.

(b) Remove the commutator end frame and O-ring.

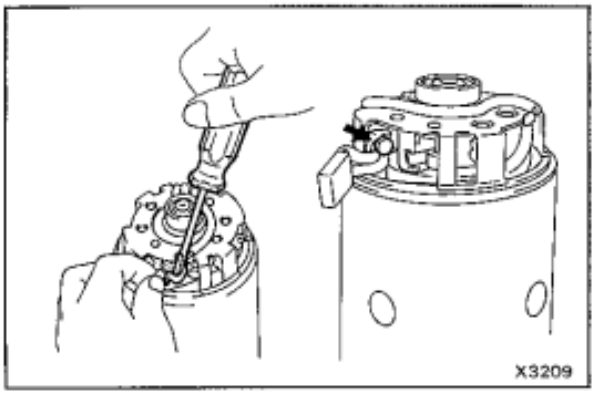

2. REMOVE BRUSHES

(a) Using a screwdriver, remove the negative brushes from the brush holder.

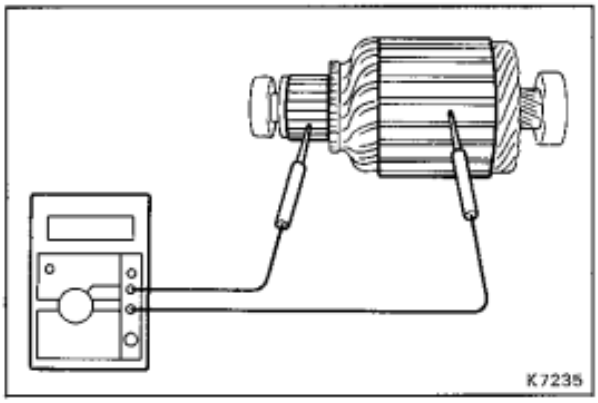

INSPECTION OF WINCH MOTOR

1. INSPECT THAT COMMUTATOR IS NOT GROUNDED

Using an ohmmeter, check that there is no continuity between the commutator and armature core. If there is continuity, replace the armature.

2. INSPECT COMMUTATOR FOR DIRTY OR BURNT SURFACE

If the surface is dirty or burnt, clean with sandpaper (No.400) or a lathe.

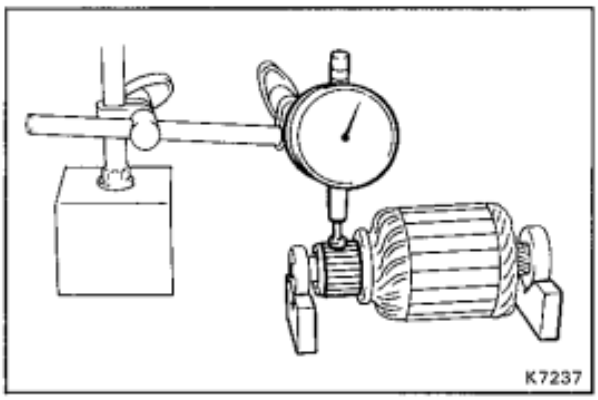

3. INSPECT COMMUTATOR CIRCLE RUNOUT

Using a dial indicator, measure the circle runout of the commutator. If the circle runout is greater than the maximum, correct with a lathe.

Standard runout: 0.05 mm (0.0020 in.) or less
Maximum runout: 0.2 mm (0.008 in.)

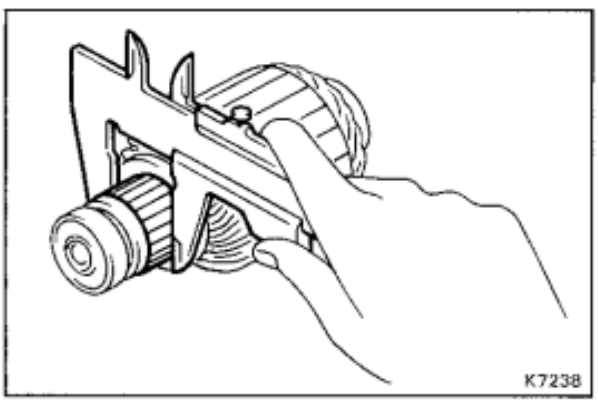

4. MEASURE DIAMETER OF COMMUTATOR

Using calipers, measure the diameter of the commutator. If the diameter of the commutator is less than minimum, replace the armature.

Standard diameter: 43 mm (1.69 in.)
Minimum diameter: 41 mm (1.61 in.)

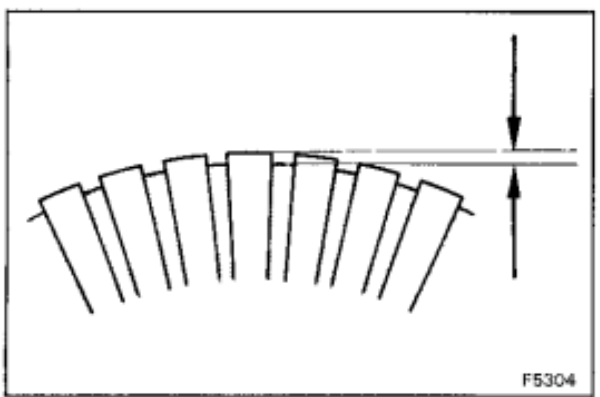

5. INSPECT UNDERCUT DEPTH

Check that the undercut depth is clean and free of foreign particles. Then smooth off the edge. If the undercut depth is less than the minimum, correct with a hacksaw blade.

Standard under cut depth:
0.5 — 0.8 mm (0.020 — 0.031 in.)

Minimum undercut depth:
0.2 mm (0.008 in.)

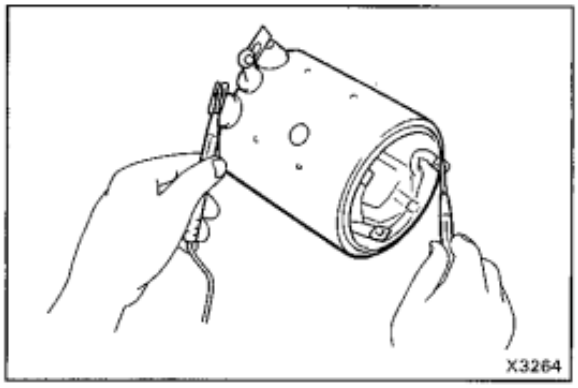

6. INSPECT FIELD COIL FOR OPEN CIRCUIT

Using an ohmmeter, check for continuity between the lead wire and field coil brush lead. If there is no continuity, replace the field coil.

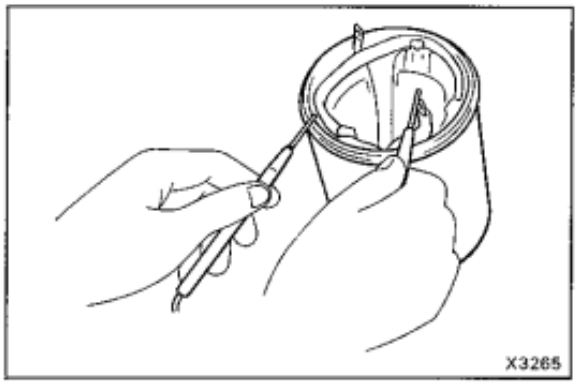

7. INSPECT THAT FIELD COIL IS NOT GROUNDED

Using an ohmmeter, check for continuity between the field coil brush lead and field frame. If there is continuity, repair or replace the yoke subassembly.

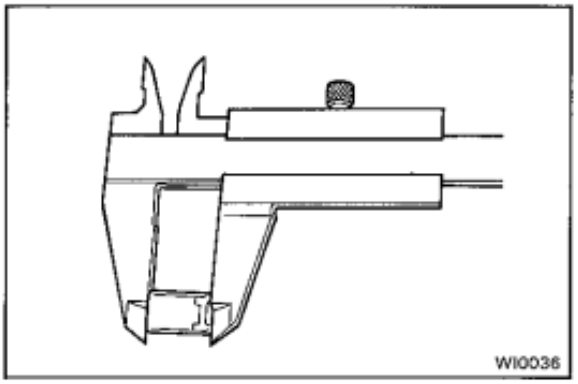

8. MEASURE BRUSH LENGTH

Using calipers, measure length of the brush.

Standard length: 22 mm (0.87 in.)
Minimum length: 15 mm (0.59 in.)

If the brush length is less than the minimum, replace the brush.

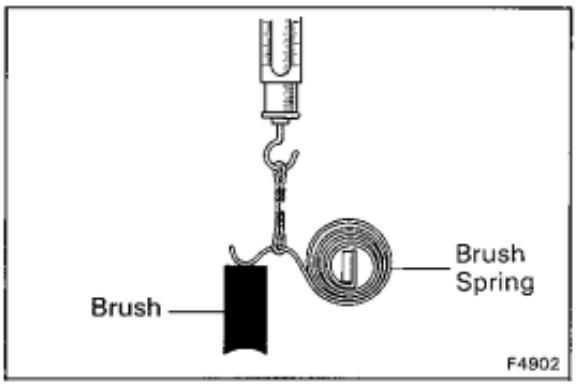

9. MEASURE BRUSH SPRING LOAD

Using a pull scale, measure the installed load of the brush spring.

Standard installed load: 1.8 kg (4.0 lb, 18 N)

HINT: Take the pull scale reading at the very instant the brush spring separates from the brush.

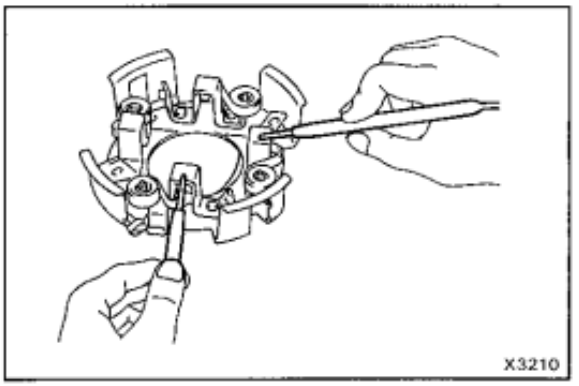

10. INSPECT BRUSH HOLDER

Using an ohmmeter, check for continuity between the positive and negative brush holders. If there is continuity, replace the brush holder assembly.

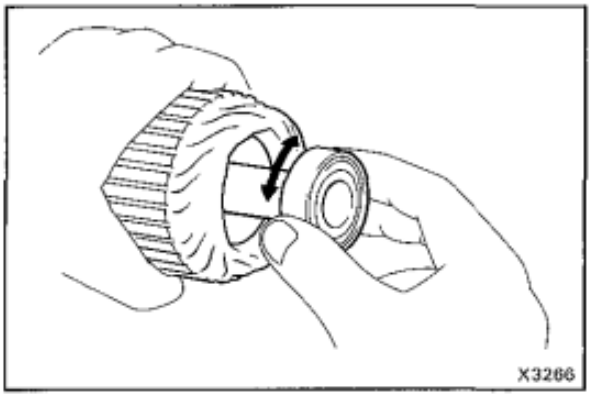

11. INSPECT BEARING

Turn each bearing by hand while applying inward force. If the bearing sticks or resists, replace it.

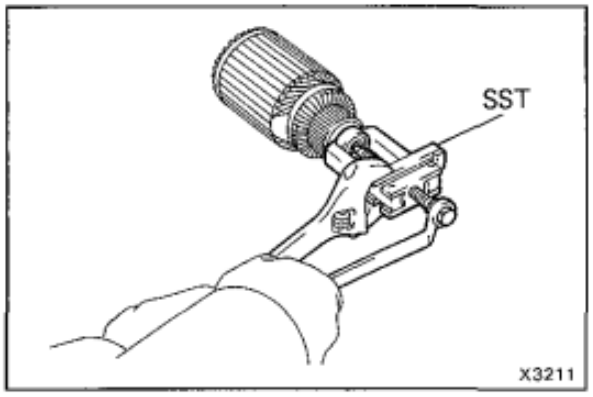

12. IF NECESSARY, REPLACE BEARINGS

(a) Using SST, remove the bearing.

SST 09286-46011

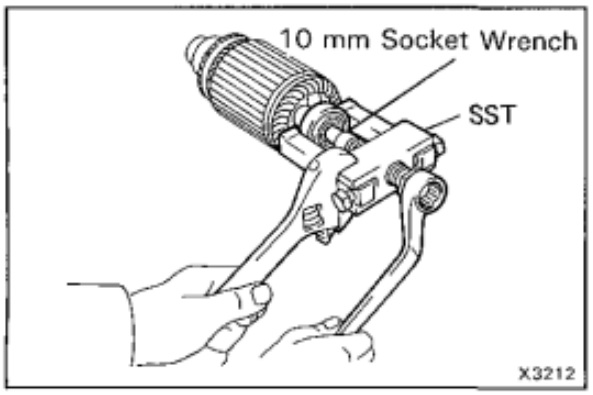

(b) Using SST, remove the bearing.

SST 09628-62011

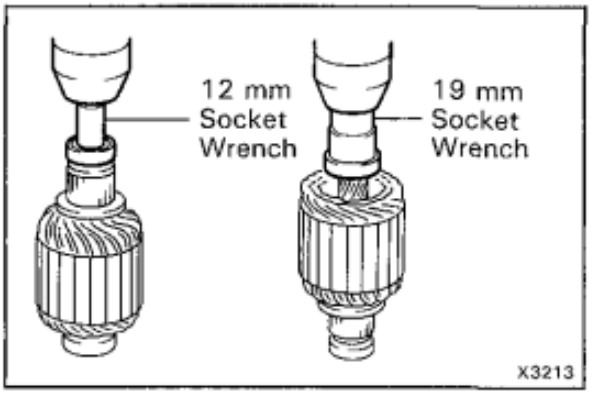

(c) Using a socket wrench and a press, press in a new bearing.

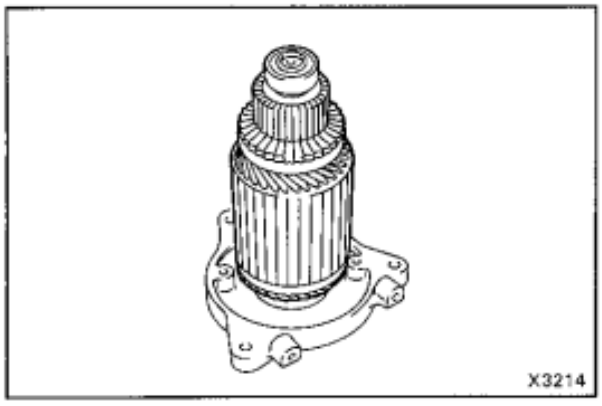

ASSEMBLY OF WINCH MOTOR

(See page WI-50)

1. INSTALL ARMATURE AND YOKE TO END FRAME

(a) Apply high temperature grease to the inside of the end frame bushing.

(b) Install the armature to the end frame.

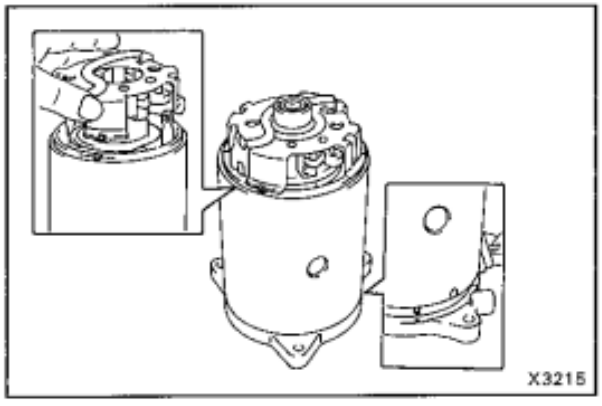

2. INSTALL YOKE SUBASSEMBLY AND BRUSH HOLDER

Align the alignment mark, install the yoke subassembly to the end frame and the brush holder to the yoke subassembly.

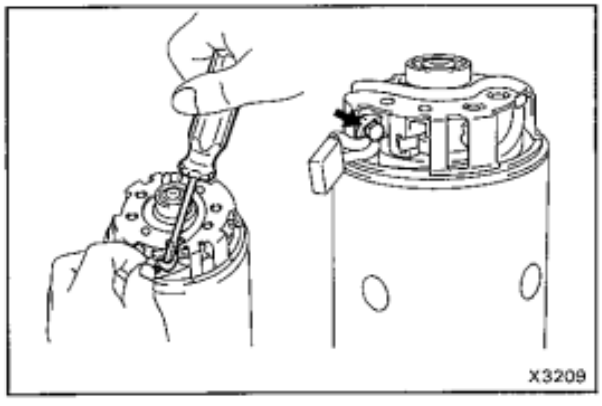

3. INSTALL BRUSH

Torque: 35 kg-cm (30 in.-lb, 3.4 N·m)

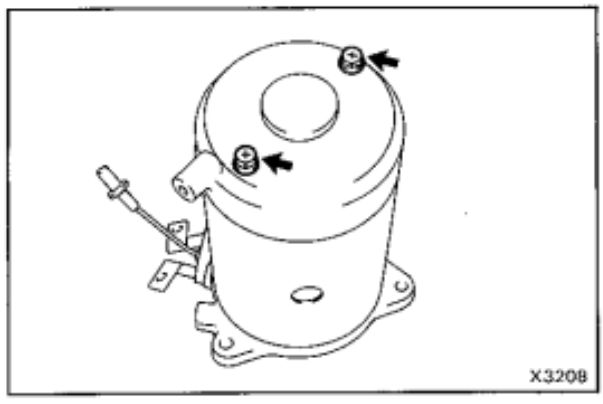

4. INSTALL COMMUTATOR END FRAME

(a) Apply MP grease to a new O-ring.

(b) Install a new O-ring on the yoke.

(c) Torque the two bolts.

Torque: 78 kg-cm (68 in.-lb, 7.7 N·m)

Magnet Switch No.1

REMOVAL AND INSTALLATION OF MAGNET SWITCH NO.1

Remove and install the parts as shown.

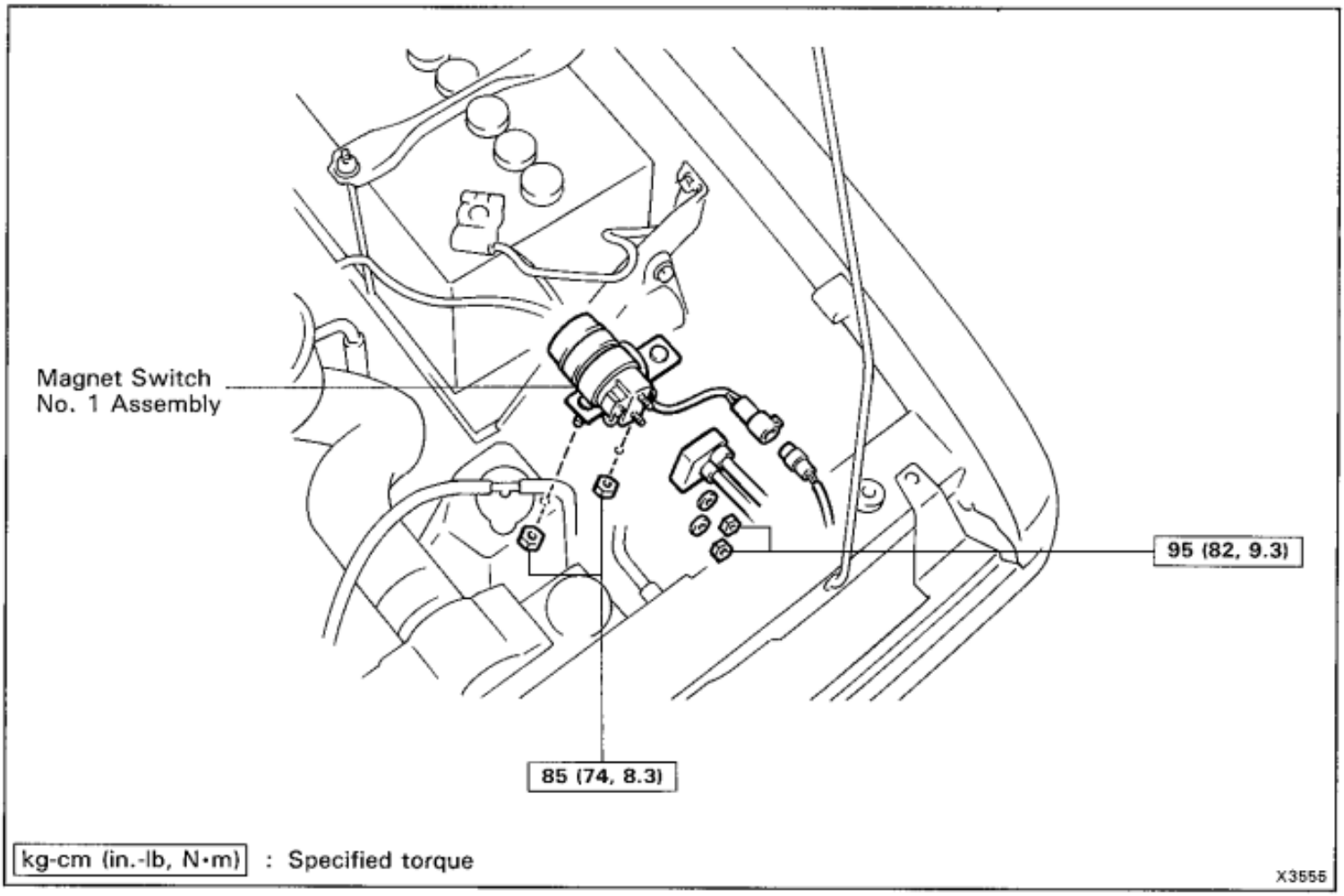

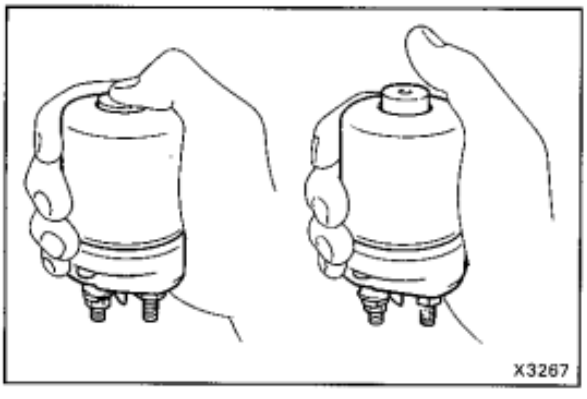

INSPECTION OF MAGNET SWITCH NO.1

INSPECT MAGNET SWITCH NO.1

(a) Push in the plunger and release it. Check that it returns quickly to its original position.

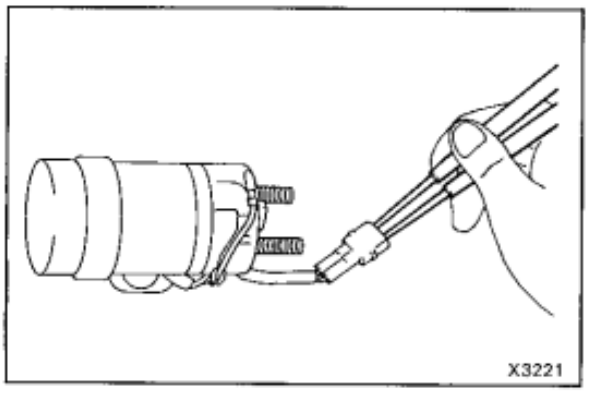

(b) Using an ohmmeter, check for continuity between the connector terminals.

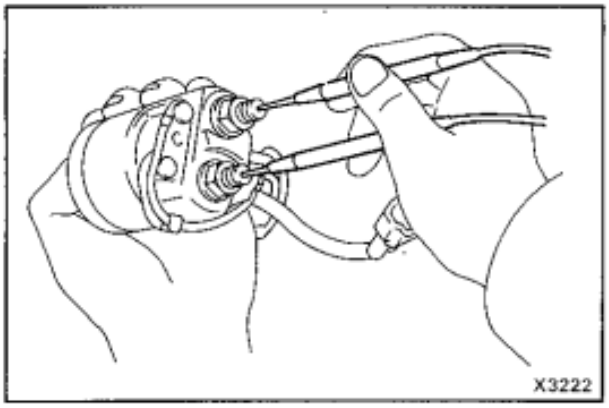

(c) Using an ohmmeter, check for no continuity between the terminals with the plunger released.

Magnet Switch No.2

COMPONENTS

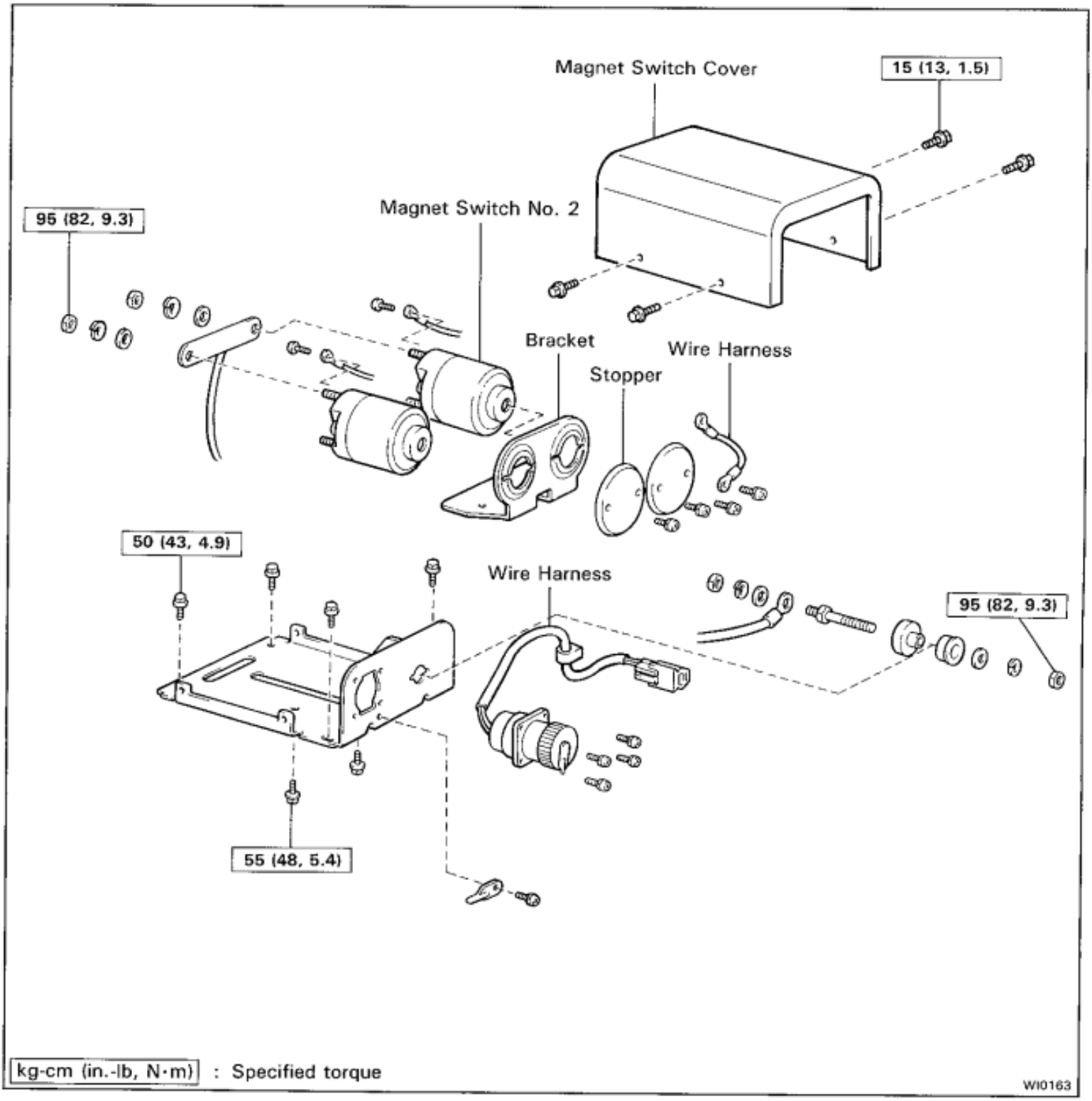

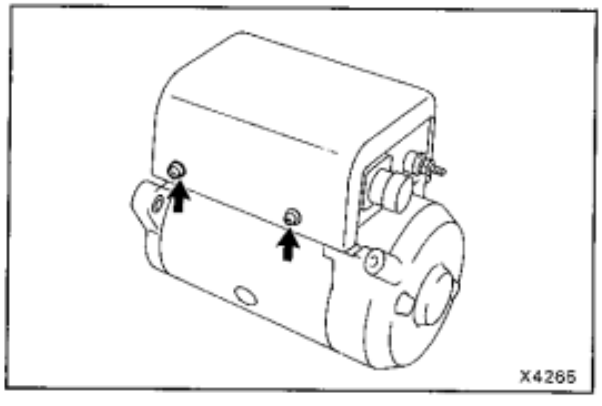

DISASSEMBLY OF MAGNET SWITCH NO.2

1. **REMOVE MAGNET SWITCH COVER**

   Remove the four screws and the magnet switch cover.

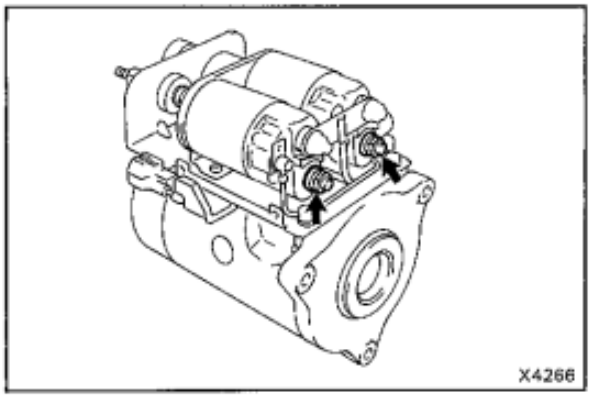

2. REMOVE MAGNET SWITCH NO.2 ASSEMBLY

(a) Disconnect the connector.

(b) Remove the two nuts and the wire harness.

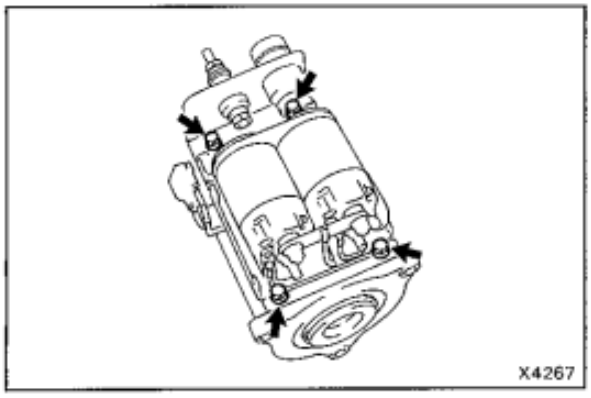

(c) Remove the four bolts and the magnet switch No.2 assembly.

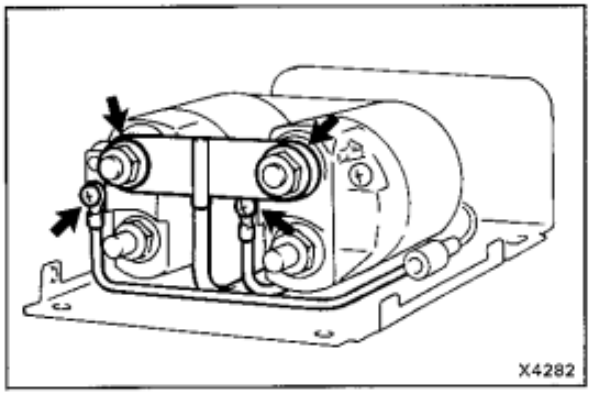

3. REMOVE MAGNET SWITCH NO.2

(a) Remove the two screws, disconnect wire harness.

(b) Remove the two nuts and terminal plate.

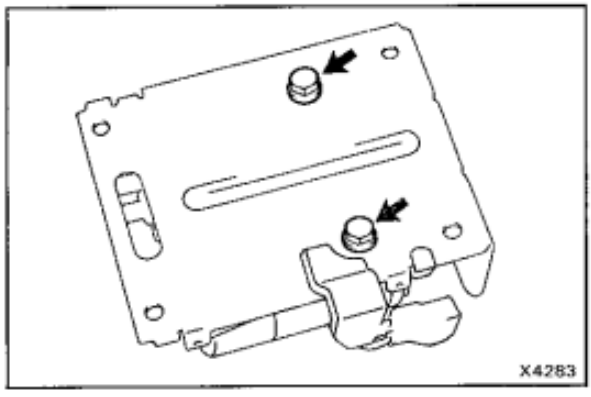

(c) Remove the two bolts and the magnet switches.

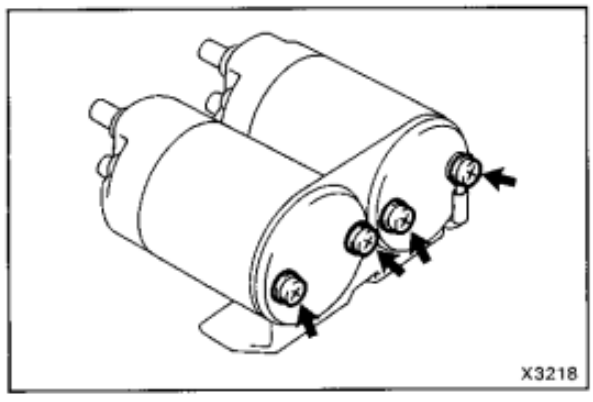

(d) Remove the four screws, the bracket and the stoppers.

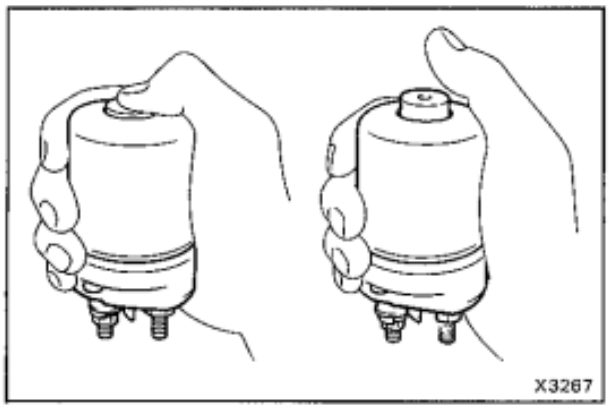

INSPECTION OF MAGNET SWITCH NO.2

1. INSPECT MAGNET SWITCH NO.2

(a) Push in the plunger and release it. Check that it returns quickly to its original position.

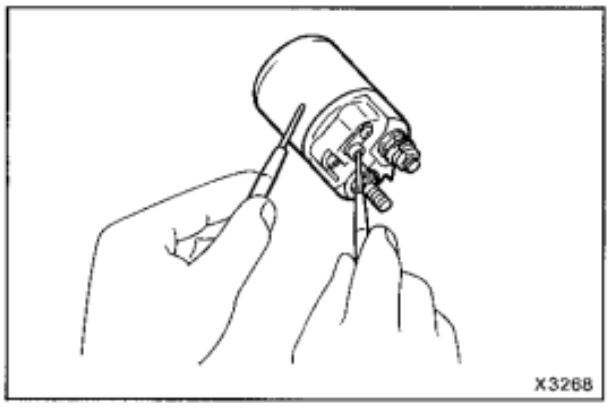

(b) Using an ohmmeter, check for continuity between the base lead wire terminal and magnet switch body. If there is no continuity, replace the magnet switch.

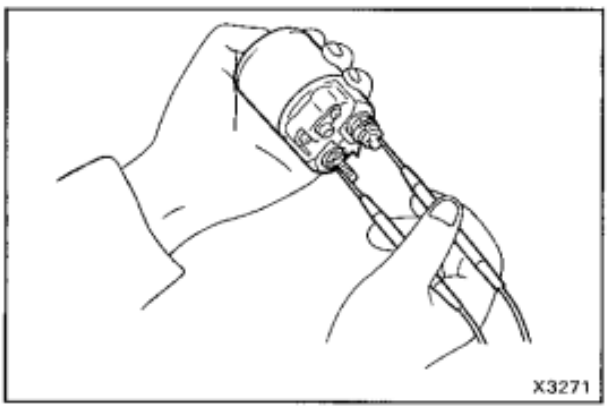

(c) Using an ohmmeter, check for no continuity between the magnet switch terminal and the motor lead wire terminal with the plunger released.

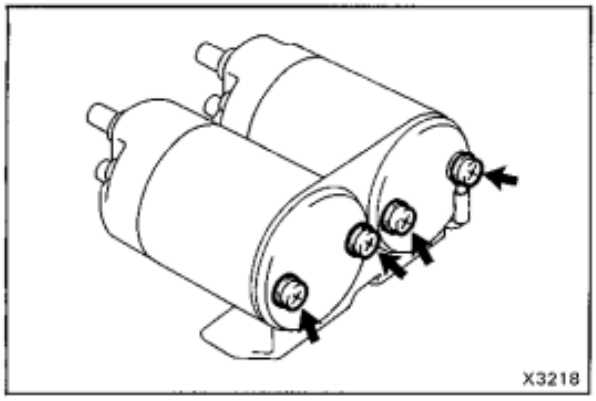

ASSEMBLY OF MAGNET SWITCH NO.2

(See page WI-57)

1. INSTALL MAGNET SWITCH NO.2

(a) Install the stoppers and the bracket with the four screws.

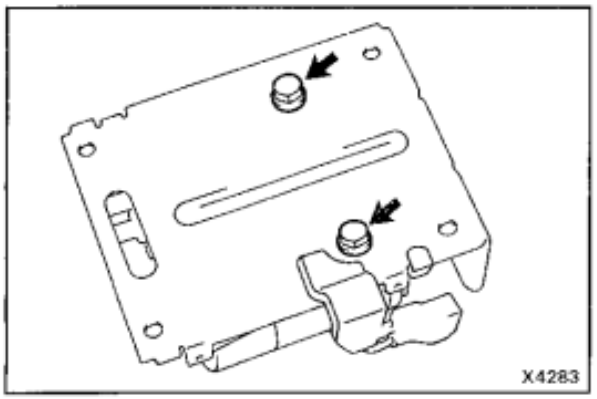

(b) Install the two magnet switches with the two bolts.

Torque: 55 kg-cm (48 in.-lb, 5.4 N·m)

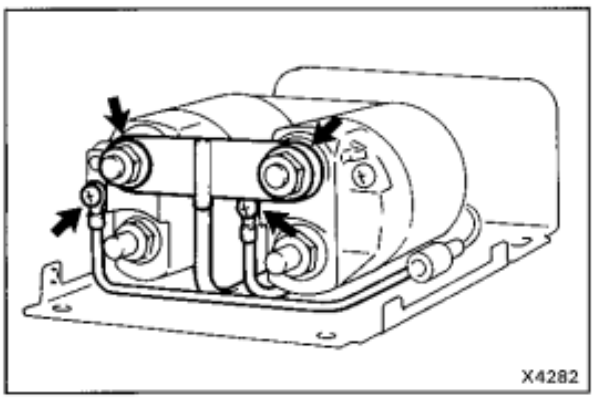

(c) Install the wire harness with the two screws.

Torque: 18 kg-cm (16 in.-lb, 2.0 N·m)

(d) Install the terminal plate with the two nuts.

Torque: 95 kg-cm (82 in.-lb, 9.3 N·m)

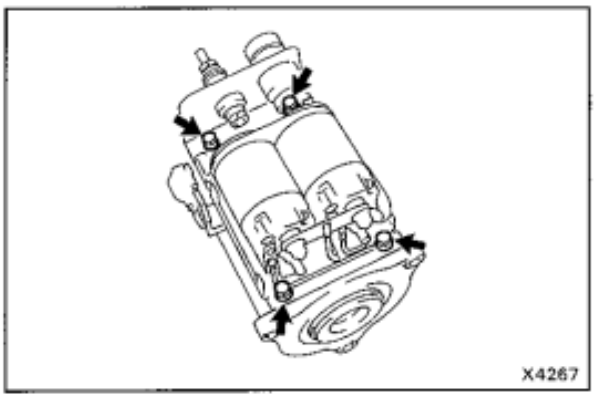

2. INSTALL MAGNET SWITCH NO.2 ASSEMBLY

(a) Install the magnet switch to the winch motor assembly with the wire harness.

(b) Torque the four bolts.

Torque: 50 kg-cm (43 in.-lb, 4.9 N·m)

(c) Connect the connector.

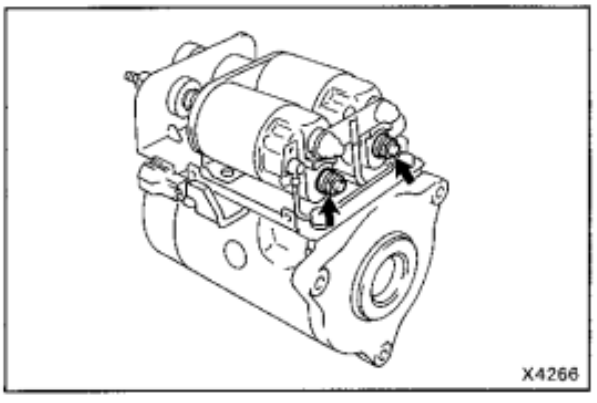

(d) Install the wire harness with the two nuts.

Torque: 95 kg-cm (82 in.-lb, 9.3 N·m)

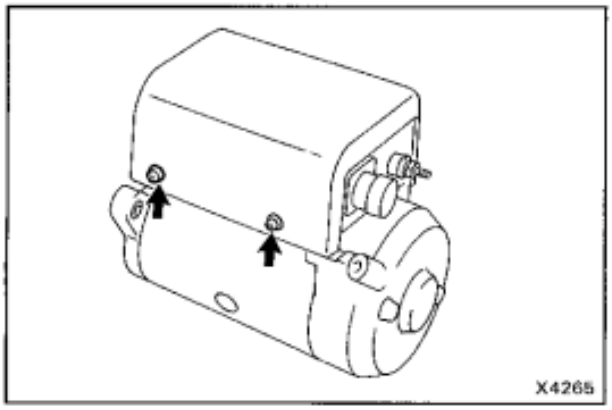

3. INSTALL MAGNET SWITCH COVER

Install the magnet switch cover with the four screws.

Torque: 15 kg-cm (13 in.-lb, 1.5 N·m)

WINCH (Mechanical Winch)

Specifications

Power take-off	Input gear bushing bore	Maximum	20.1 mm	0.791 in.
Drive shaft	Drive shaft runout	Maximum	0.7 mm	0.028 in.
	Spider bearing axial play	Maximum	0.15 mm	0.0059 in.
Winch	Gear case bushing bore	STD:A	90.000 — 90.035 mm	3.5433 — 3.5447 in.
		STD:B	75.000 — 75.030 mm	2.9528 — 2.9539 in.
		Maximum:A	90.3 mm	3.555 in.
		Maximum:B	75.3 mm	2.965 in.
	Gear case cover bushing bore	STD	65.000 — 65.030 mm	2.5591 —2.5602 in.
		Maximum	65.3 mm	2.571 in.
	End bracket bushing bore	STD	75.000 — 75.030 mm	2.9528 — 2.9539 in.
		Maximum	75.2 mm	2.961 in.
	Wire diameter	Minimum	7.5 mm	0.295 in.

Torque Specifications

Part tightened		kg-cm	ft-lb	N·m
P.T.O case x Lock plate		130	9	13
P.T.O case x P.T.O cover		75	65 in.-lb	7.4
P.T.O case x Bearing retainer		195	14	19
P.T.O case x Transmission	(Front side)	170	12	17
	(Other side)	195	14	19
Universal joint flange x Yoke		200	14	20
Universal joint flang x Output shaft		480	35	47
Locking ball bolt		130	9	13
P.T.O drain plug		300	22	29
P.T.O filler plug		300	22	29
No.1 Drive shaft x Sleeve yoke		250	18	25
Pillow block		120	9	12
Front bumper		150	11	15
		250	18	25
		300	22	29
Winch assembly x Body		400	29	39
Winch gear case x Winch base		380	27	37
Winch gear case x Winch roller bracket		380	27	37
Lever shift lock plate x Winch roller bracket		120	9	12
Winch gear case x Worm bearing retainer		250	18	25
Winch gear case x Gear case cover		120	9	12
Gear case cover bolt		115	8	11
Gear case cover x Shift lock lever		120	9	12
Wire lock x Wire lock plate		120	9	12
Winch wire guide		120	9	12
Winch breather plug		200	14	20
Winch drain plug		175	13	17
Winch filler plug		175	13	17

WINCH (Electric Winch)

Specifications

Winch	Drum spacer No.1 thickness		STD	1.4 mm	0.0551 in.
			Minimum	1.0 mm	0.0394 in.
	Drum bushing bore		STD	64.20 mm	2.5276 in.
			Maximum	64.36 mm	2.5339 in.
	Outer clutch bushing bore		STD	12.00 mm	0.4724 in.
			Maximum	12.03 mm	0.4736 in.
	Clutch outer disc thickness		STD	1.60 mm	0.0630 in.
			Minimum	1.50 mm	0.0591 in.
	Clutch inner disc thickness		STD	2.30 mm	0.0906 in.
			Minimum	2.15 mm	0.0846 in.
	Drum spacer No.2 thickness		STD	1.4 mm	0.0551 in.
			Minimum	1.0 mm	0.0394 in.
	Input shaft thrust washer thickness		STD	2.00 mm	0.0787 in.
			Minimum	1.80 mm	0.0709 in.
	Clutch thrust washer thickness		STD	1.25 mm	0.0492 in.
			Minimum	1.00 mm	0.0394 in.
	Output shaft	Bore	STD	12.00 mm	0.4724 in.
			Maximum	12.03 mm	0.4736 in.
		Diameter	STD	28.00 mm	1.1024 in.
			Minimum	27.90 mm	1.0984 in.
	Brake case bushing bore		STD	27.76 mm	1.0929 in.
			Minimum	27.82 mm	1.0953 in.
	Drive shaft diameter		Minimum: A	11.86 mm	0.4669 in.
			Minimum: B	11.70 mm	0.4606 in.
			Minimum: C	11.95 mm	0.4705 in.
	Clutch input shaft diameter		STD	11.95 mm	0.4705 in.
	Gear case cover bushing bore		STD	12.00 mm	0.4724 in.
			Maximum	12.15 mm	0.4783 in.
	Planetary gear No.3 bushing bore		STD	28.00 mm	1.1024 in.
			Maximum	28.05 mm	1.1043 in.
	Wire diameter		Minimum	7.5 mm	0.295 in.
Winch Motor	Commutator	Circle runout	STD	0.05 mm	0.0020 in.
			Maximum	0.2 mm	0.008 in.
		Diameter	STD	43 mm	1.69 in.
			Minimum	41 mm	1.61 in.
		Undercut depth	STD	0.5 – 0.8 mm	0.020 – 0.031 in.
			Minimum	0.2 mm	0.008 in.
	Brush	Length	STD	22 mm	0.87 in.
			Minimum	15 mm	0.59 in.

Torque Specifications

Part tightened	kg-cm	ft-lb	N·m
Front bumper x Body	150	11	15
	250	18	25
	300	22	29
Winch assembly x Body	400	29	39
Winch base x Winch base No.2	330	24	32
	600	43	59
Winch roller bracket x Winch brake case	220	16	22
Winch wire guide	105	8	10
Winch motor x Winch brake case	400	29	39
Winch wire	10	9 in.-lb	1.0
Drain plug	175	13	17
Winch gear case x Winch gear case cover	90	78 in.-lb	8.8
Winch gear case bolt	45	39 in.-lb	4.4
Commutator end frame x Yoke	78	68 in.-lb	7.6
Brush x Brush holder	35	30 in.-lb	3.4
Magnet switch No.1 x Body	85	74 in.-lb	8.3
Magnet switch	95	82 in.-lb	9.3
Magnet switch x Base	55	48 in.-lb	5.4
Wire harness (screw)	18	16 in.-lb	2.0
Wire harness (nut)	95	82 in.-lb	9.3
Magnet switch x Terminal plate	95	82 in.-lb	9.3
Magnet switch No.2 Assembly x Winch motor	50	43 in.-lb	4.9
Magnet switch No.2 Assembly x Switch cover	15	13 in.-lb	1.5

GENERAL INFORMATION

ELECTRICAL PARTS

Before removing and inspecting the electrical parts, set the ignition switch to the LOCK position and disconnect the negative (—) terminal cable from the battery.

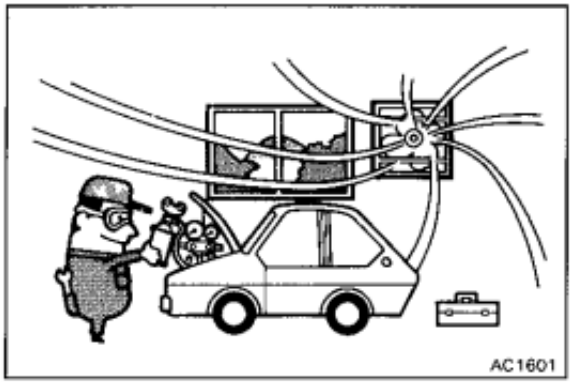
AC1601

COOLING SYSTEM

1. WHEN HANDLING REFRIGERANT (R-12), FOLLOWING PRECAUTIONS MUST BE OBSERVED;

(a) Do not handle refrigerant in an enclosed area or near an open flame.

(b) Always wear eye protection.

(c) Be careful that liquid refrigerant does not get in your eyes or on your skin.

If liquid refrigerant gets in your eyes or on your skin;

- Do not rub.
- Wash the area with lots of cool water.
- Apply clean petroleum jelly to the skin.
- Go immediately to a physician or hospital for professional treatment.
- Do not attempt to treat yourself.

AC1602

2. WHEN REPLACING PARTS IN REFRIGERANT LINE;

(a) Discharge the refrigerant in the line slowly before replacement.

(b) Insert a plug immediately in disconnected parts to prevent the entry of moisture and dust.

(c) Do not leave a new condenser or receiver, etc., lying around with the plugs removed.

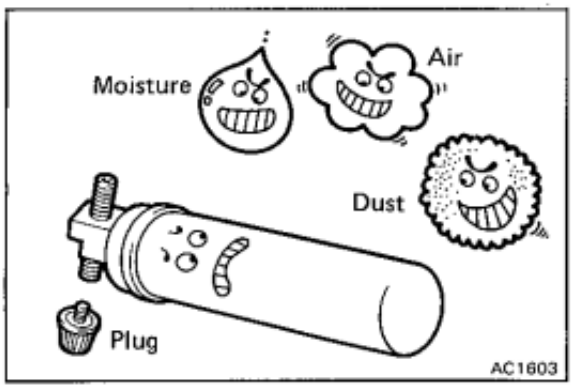

AC1603

(d) Discharge the refrigerant from the charging valve before installing a new compressor.

If the refrigerant is not discharged first, compressor oil will spray out with the refrigerant gas when the plug is removed.

(e) Do not use a torch for tube bending or lengthening operations.

If tubes are heated with a torch, a layer of oxidation forms inside the tube, causing the same kind of trouble as an accumulation of dust.

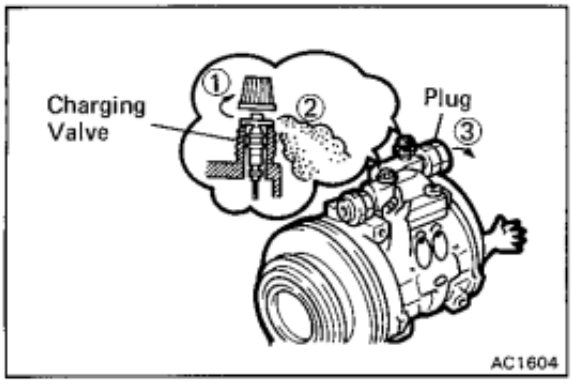

AC1604

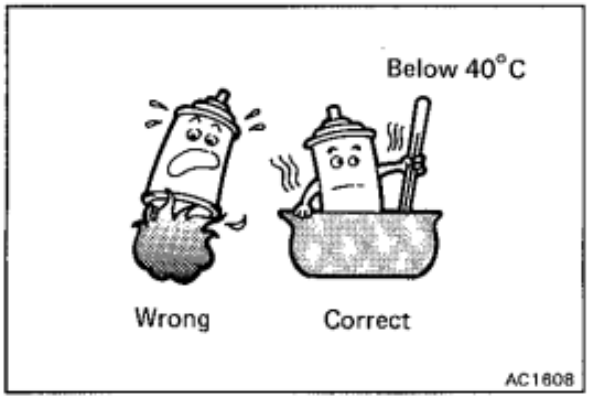

3. WHEN HANDLING REFRIGERANT CONTAINER (SERVICE CAN);

(a) The container must never be heated.

(b) Containers must be kept below 40°C (104°F)

(c) If warming a service can with hot water, be careful that the valve on top of the service can is never immersed in the water, as the water may permeate the refrigerant cycle.

(d) Empty service cans must never be re-used.

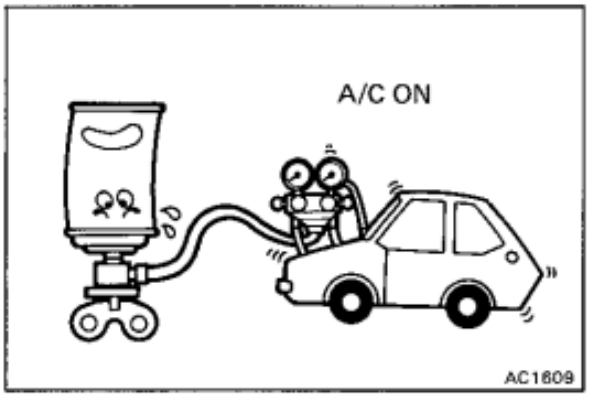

4. WHEN A/C IS ON AND REFRIGERANT GAS IS BEING REPLENISHED;

(a) If there is not enough refrigerant gas in the refrigerant cycle, oil lubrication will be insufficient and compressor burnout may occur, so take care to avoid this.

(b) If the valve on the high pressure side is opened, refrigerant flows in the reverse direction and could cause the service can to rupture, so open and close the valve on the low pressure side only.

(c) If the service can is inverted and refrigerant is loaded in a liquid state, the liquid is compressed and causes the compressor to break down, so the refrigerant must be in a gaseous state.

(d) Be careful not to load too much refrigerant gas, as this causes trouble such as inadequate cooling, poor fuel economy, engine overheating, etc.

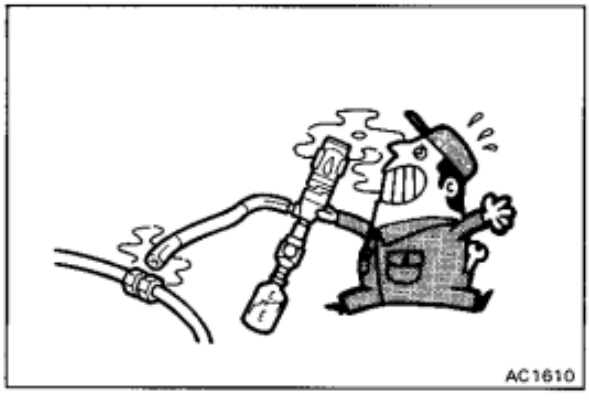

5. WHEN USING GAS-CYLINDER TYPE GAS LEAK TESTER;

(a) Since a naked flame is used, first make sure that there are no flammable substances nearby before using it.

(b) Be careful, as a poisonous gas is produced when refrigerant gas comes in contact with heated parts.

DESCRIPTION

PARTS LOCATION

Single A/C

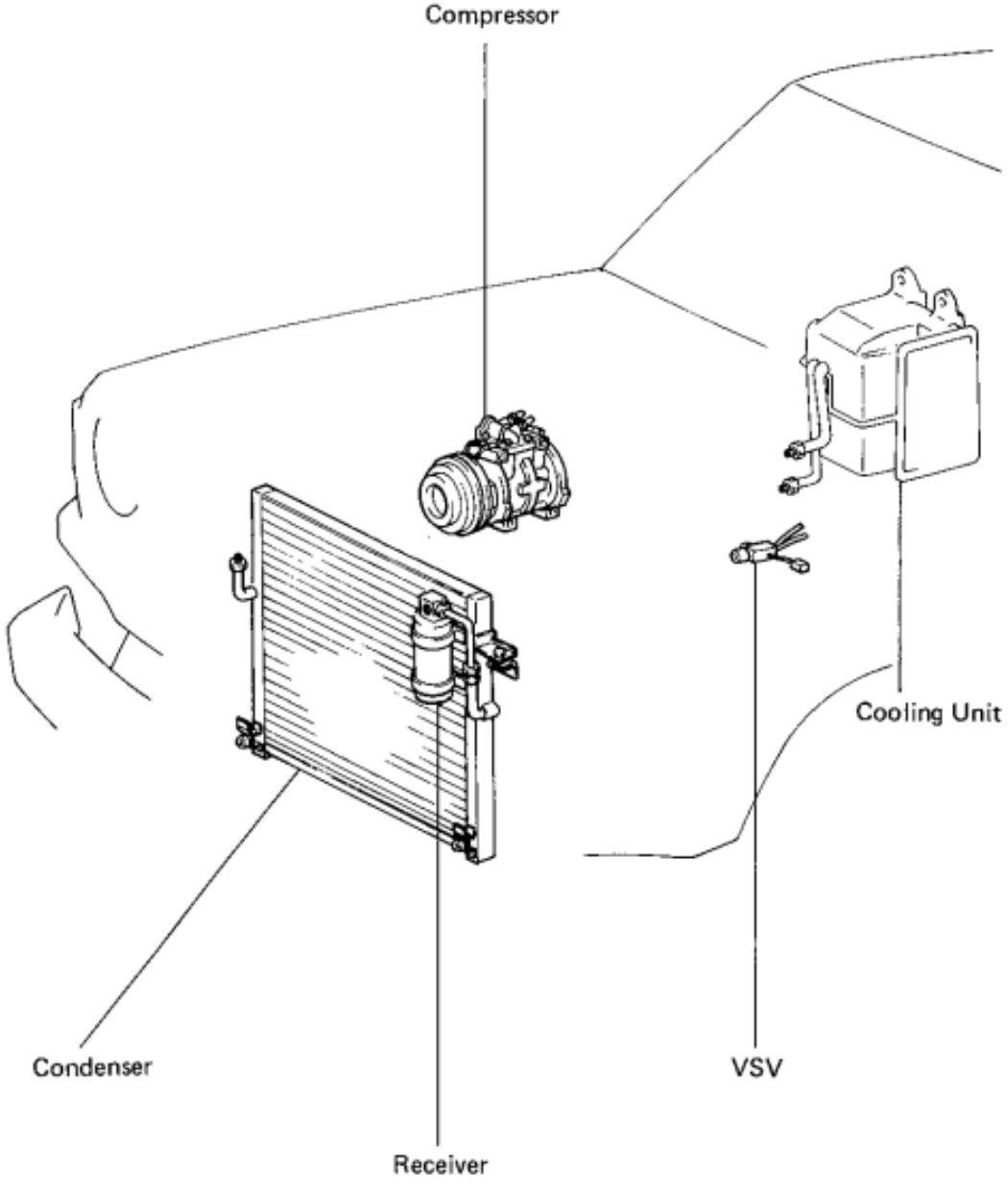

AC2787

PARTS LOCATION (CONT'D)

Dual A/C

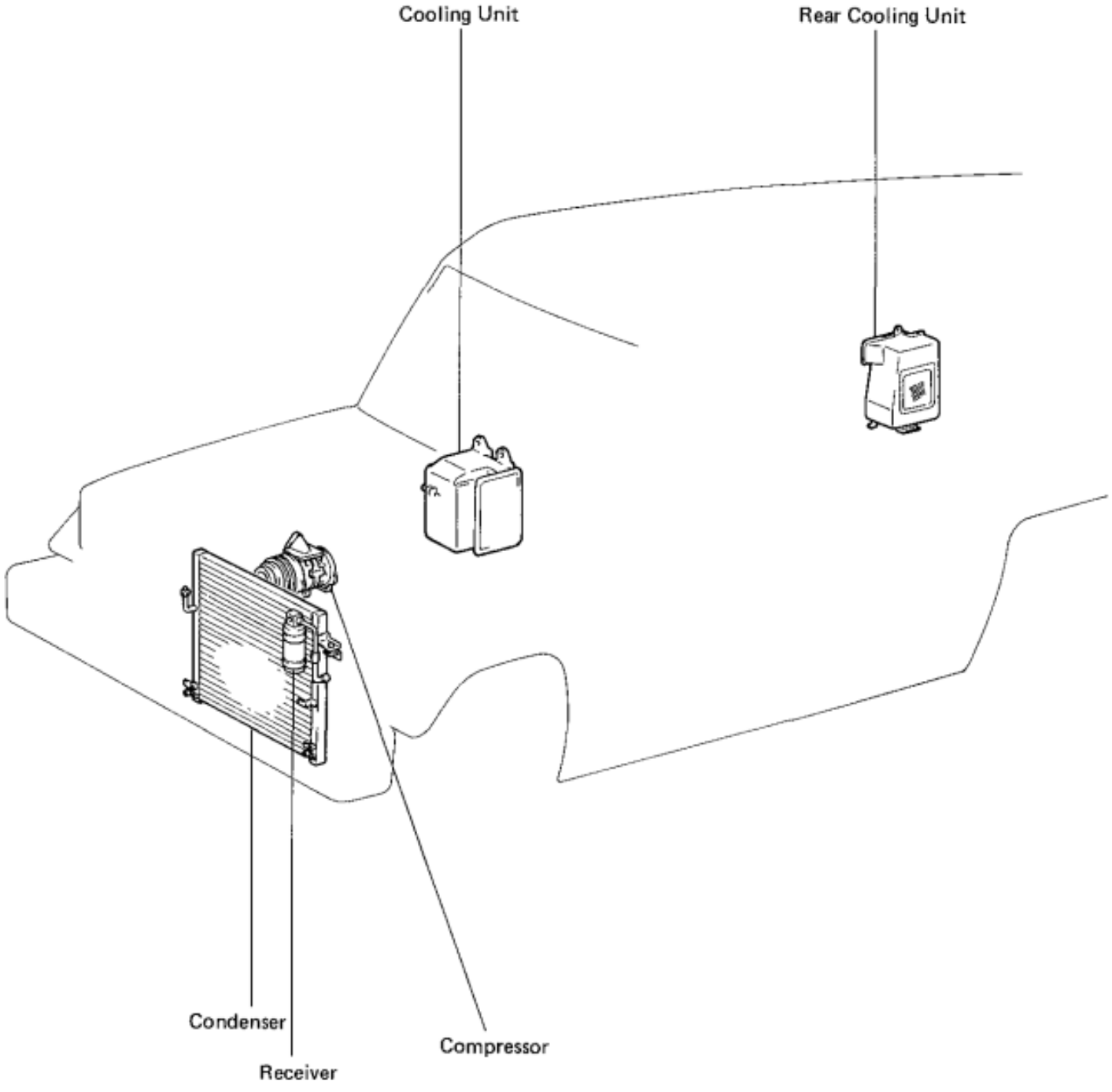

ELECTRICAL WIRING DIAGRAM (CONT'D)

Dual A/C
3F engine

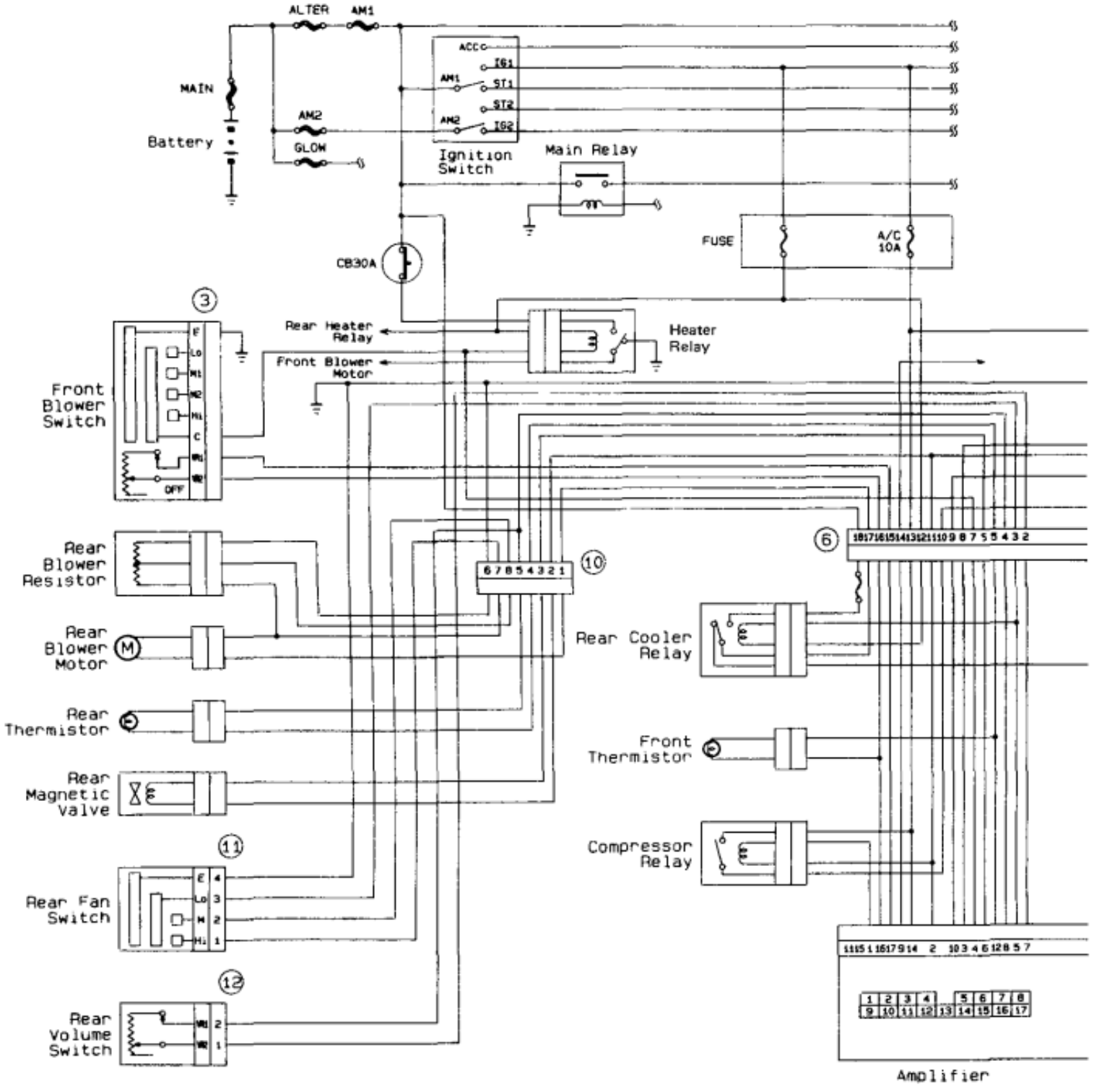

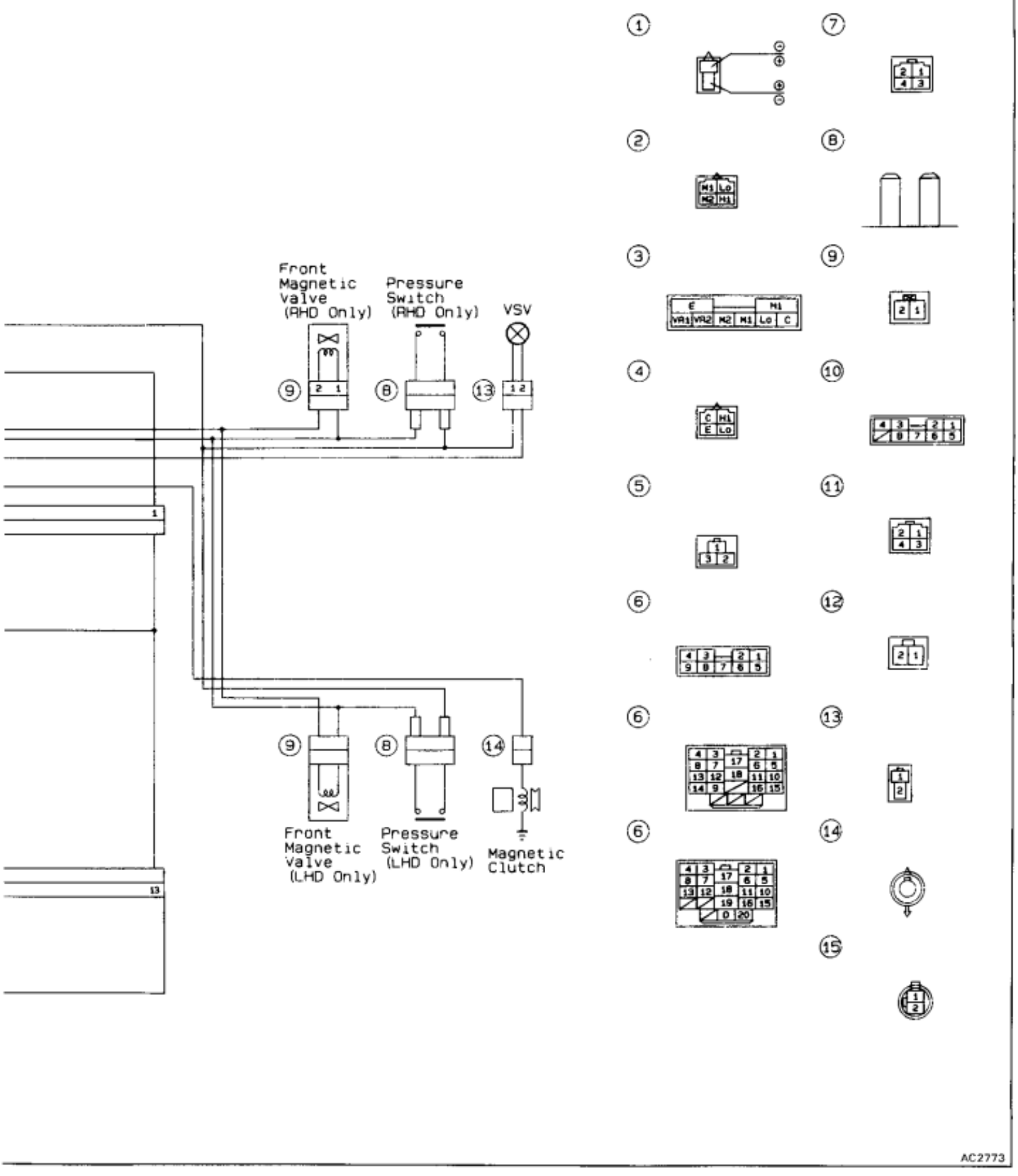
Front Magnetic Valve (RHD Only)
Pressure Switch (RHD Only)
VSV
Front Magnetic Valve (LHD Only)
Pressure Switch (LHD Only)
Magnetic Clutch
AC2773

ELECTRICAL WIRING DIAGRAM (CONT'D)

Dual A/C
1HZ engine

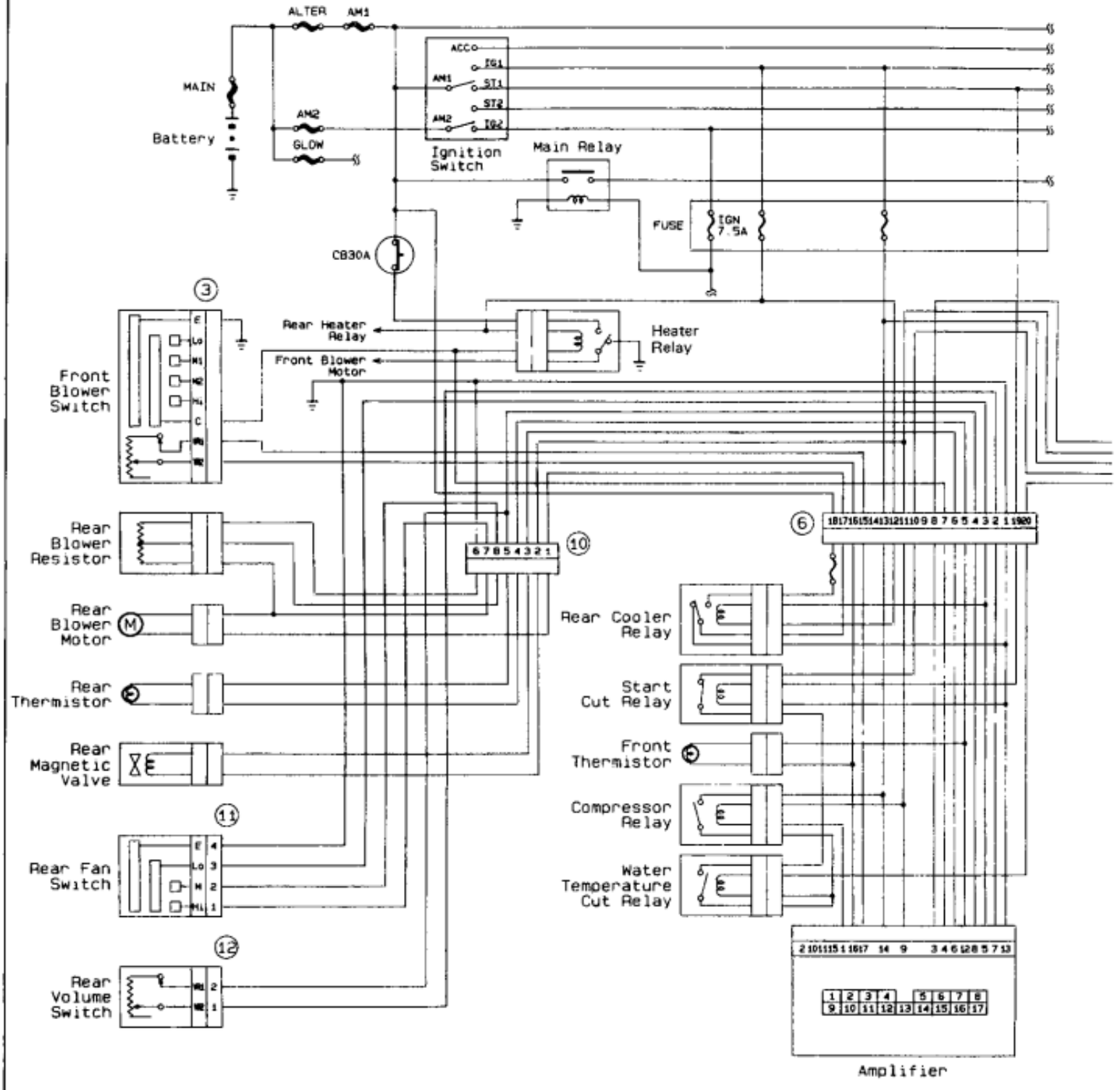

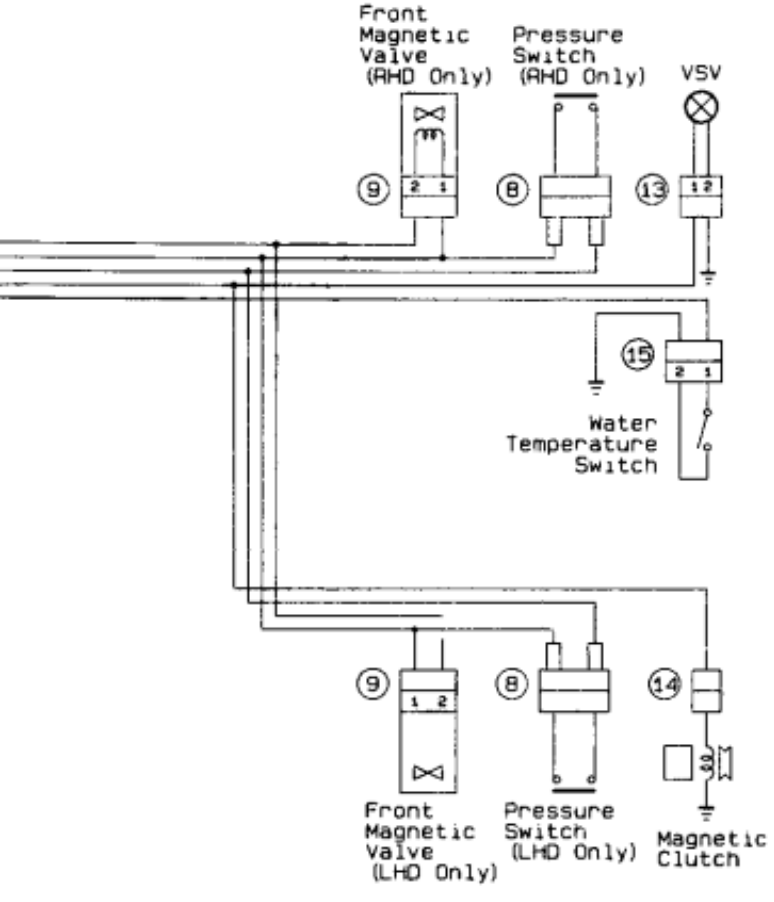
Front
Magnetic
Valve
(RHD Only)
Pressure
Switch
(RHD Only)
VSV
Water
Temperature
Switch
Front
Magnetic
Valve
(LHD Only)
Pressure
Switch
(LHD Only)
Magnetic
Clutch

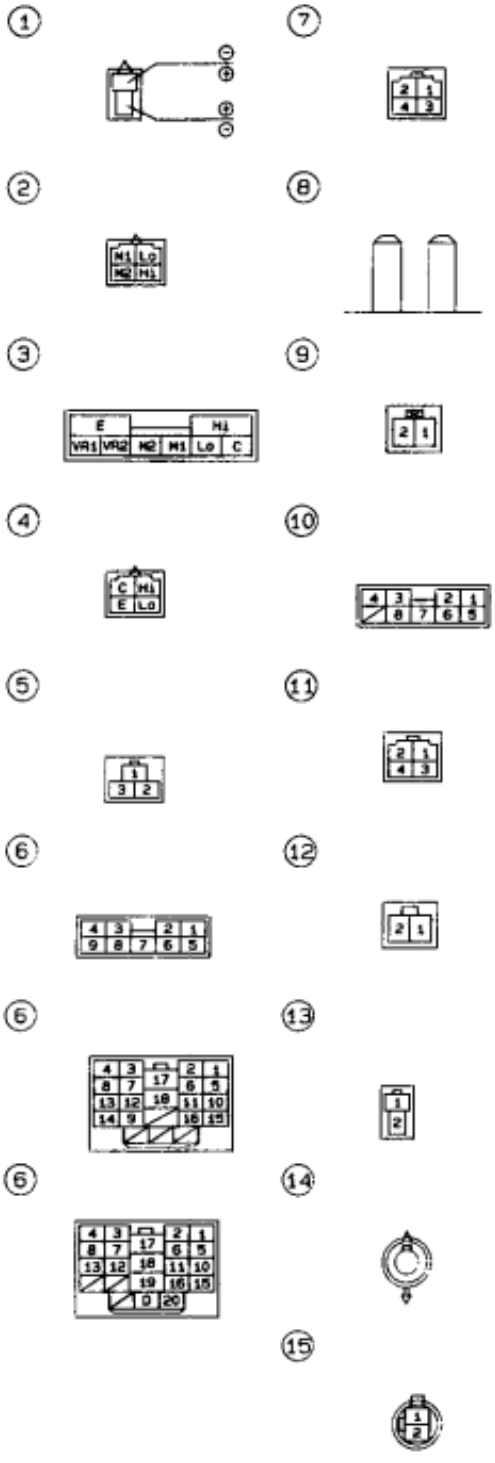

AC2774

ELECTRICAL WIRING DIAGRAM

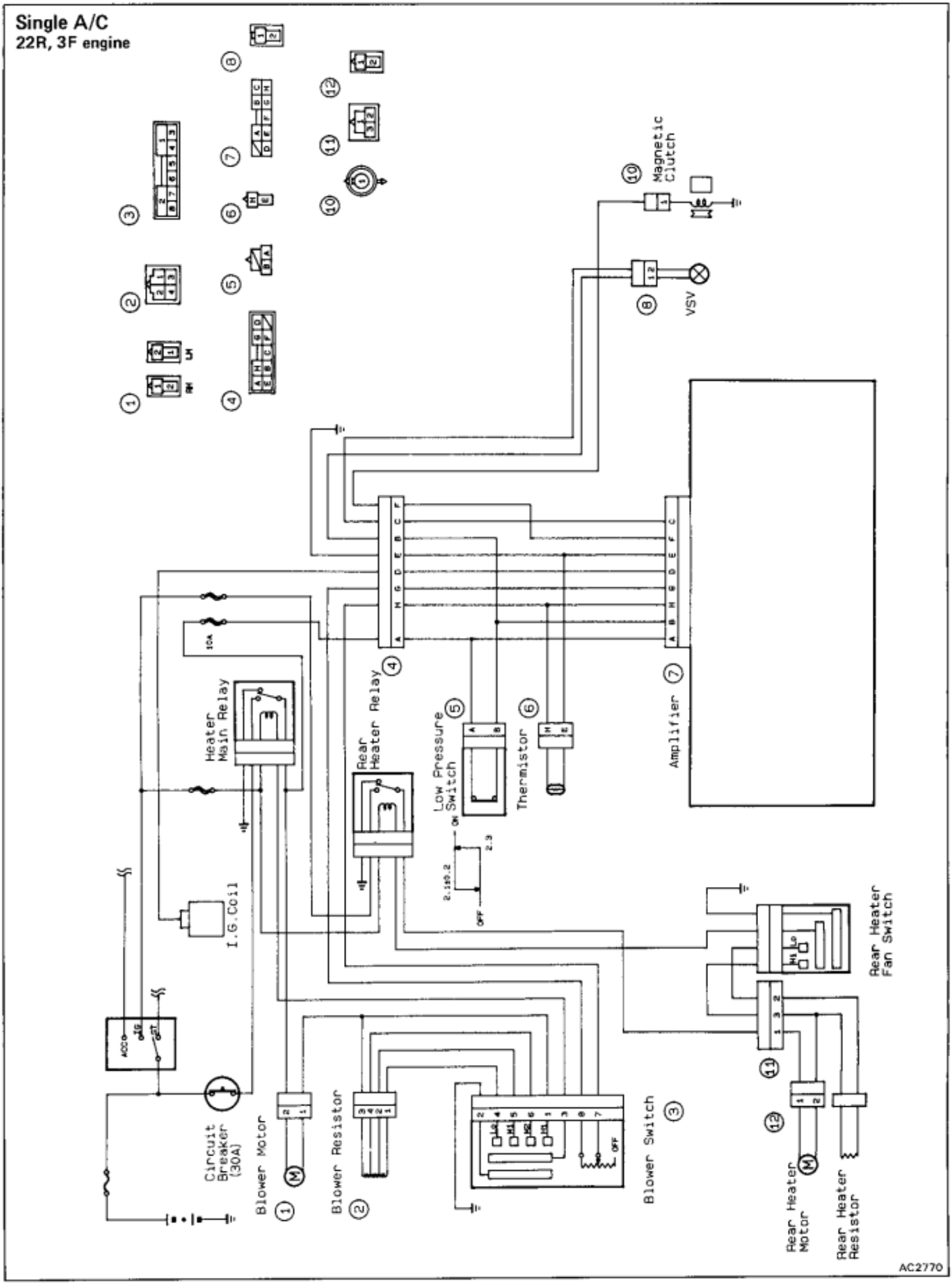

ELECTRICAL WIRING DIAGRAM (CONT'D)

Single A/C
2L-T, 3L engine

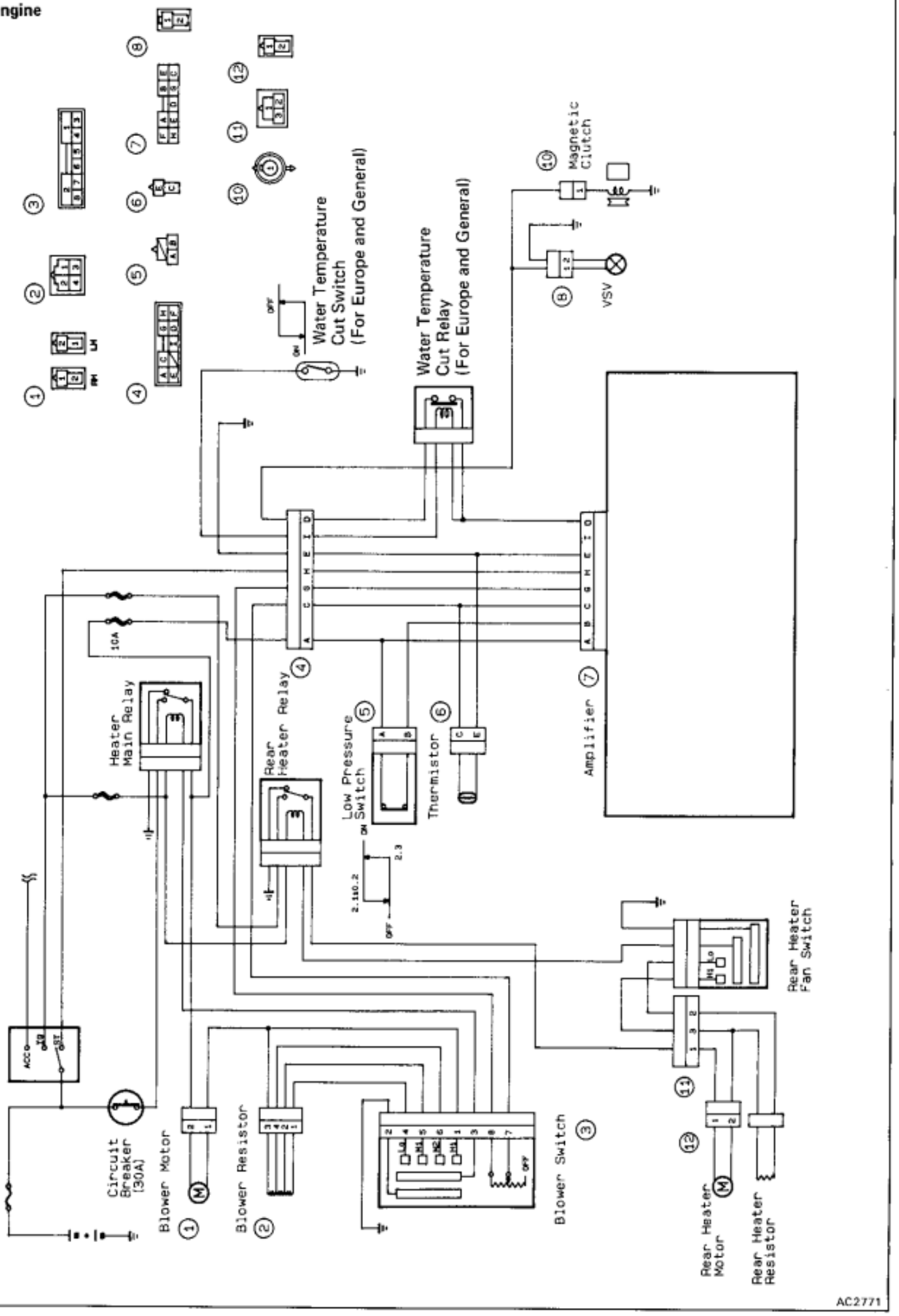

ELECTRICAL WIRING DIAGRAM (CONT'D)

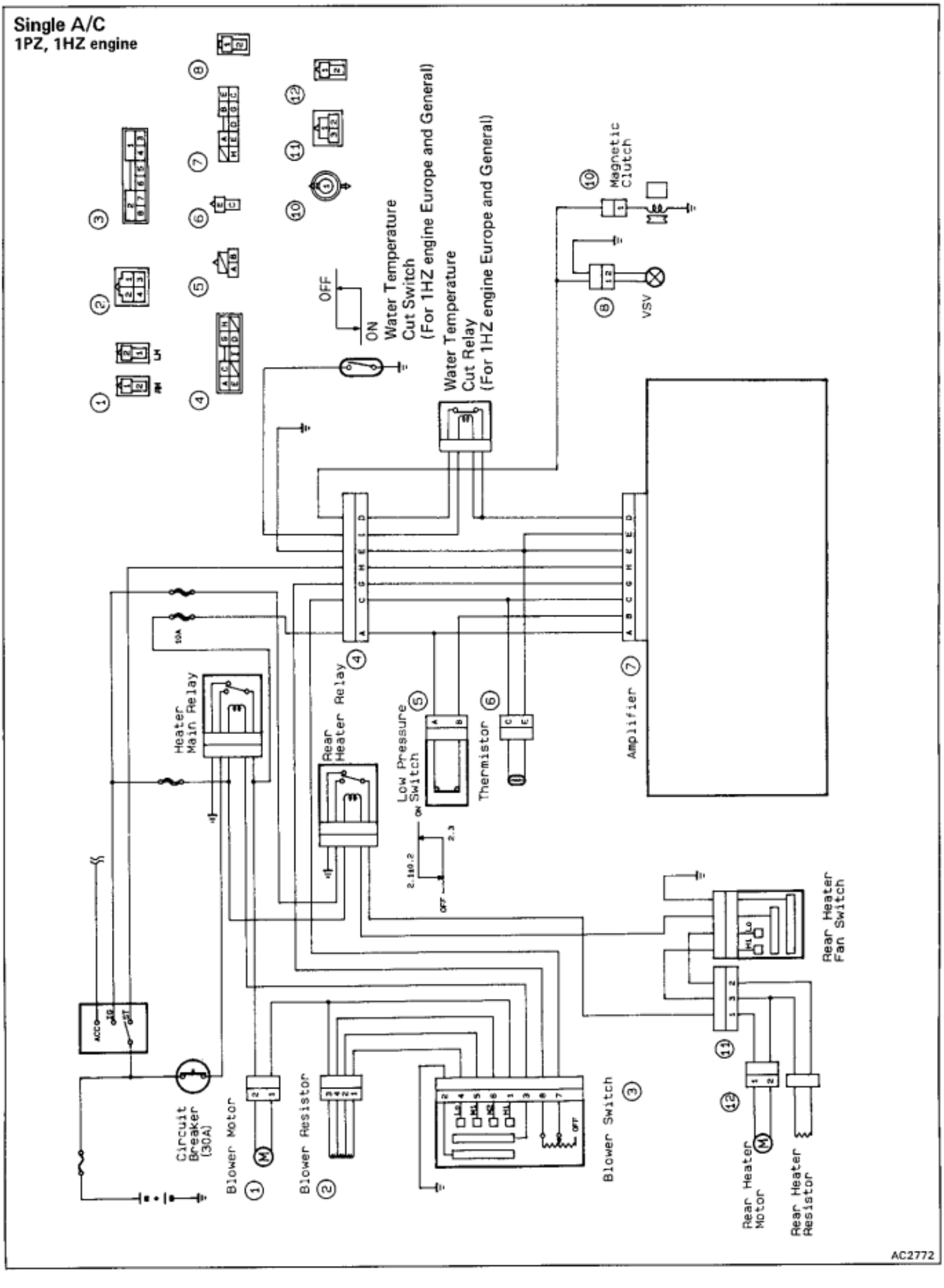

PREPARATION

SPECIAL TOOLS AND EQUIPMENT

Tool	SST No.	Use
Ohmmeter	—	To diagnosis electrical system
Voltage meter	—	To diagnosis electrical system
Air conditioner service tool set	07110-58011	To evacuate and charge system
Hexagon wrench set	07110-61050	To remove service valve and front housing
Magnetic clutch remover	07112-66040	To remove pressure plate
Magnetic clutch stopper	07112-76060	To remove pressure plate
Felt remover	07112-15020	To remove felt
Lip seal protector	07112-85010	To install shaft seal
Lip seal pressure	07112-85020	To install shaft seal
Seal plate remover	07112-85030	To remove shaft seal
Snap ring pliers	07114-84010	To remove shaft seal
Snap ring pliers	07114-84020	To remove magnetic clutch

SSM (SPECIAL SERVICE MATERIALS)

Part Name	Part No.	Use etc.
DENSOOIL 6	07117-68040	Compressor
SUNISO No.5GS or equivalent	—	

TROUBLESHOOTING

You will find the troubles easier using the table well shown below. In this table, each number shows the priority of causes in troubles. Check each part in order. If necessary, replace these parts.

See page / Parts Name / Trouble	AC-18	AC-16	AC-20	BE-10	BE-10	BE-10	AC-50	AC-41	BE-61
	Inspect Volume of Refrigerant	Inspect Refrigeration System with Manifold Gauge Set	Inspect Drive Belt Tension	Fusible Link	Medium Current Fuse	Fuse	Pressure Switch	Thermistor	Water Temp. Switch
No blower operation				1	2				
No blower control									
No air flow mode control									
No air inlet control									
Insuficient flow of cool air									
Insuficient flow of warm air									
No cool air comes out	2	3	4			1	5	11	
Cool air comes out intermittently	1	2	3					5	
Cool air comes out only at high engine speed	2	3	1						
Insufficient cooling	1	2	3					11	6
No warm air comes out									
Air temp. control not functioning									
No engine idle up when A/C switch on									

TROUBLESHOOTING (Cont'd)

Heater Relay AC-53	Blower Resistor AC-52	Blower Motor AC-52	A/C Control Assembly AC-47	A/C Amplifier AC-55	Compressor AC-22	Condenser AC-37	Evaporator AC-40	Expansion Valve AC-45	Magnetic Clutch AC-25	Receiver AC-38	Water Valve AC-48	Heater Radiator —	A/C Idle Up VSV AC-54	Wiring or Wiring Connection AC-6
3	6	5	4											7
	2		1											3
			1											2
			1											2
1	3	2					4							5
1	3	2										4		5
			9	10	7				6		8			
				4				6						7
					5	4								
				10	9	4	12	13	8	5	7			
			2								1	3		4
			2								1			3
				2									1	3

REFRIGERATION SYSTEM

Inspection of Refrigeration System with Manifold Gauge Set

This is a method in which the trouble is located by using a manifold gauge set. (See "Installation of Manifold Set" on page AC-19) Read the manifold gauge pressure when the following conditions are established:

(a) Temperature at the air inlet with the switch set at RECIRC is 30 — 35°C (86 — 95°F)

(b) Engine running at 2,000 rpm

(c) Blower fan speed control switch set at high speed

(d) Temperature control switch set at max cool side

HINT: It should be noted that the gauge indications may vary slightly due to ambient temperature conditions.

No.	Gauge reading kg/cm^2 (psi, kPa)	Condition	Probable cause	Remedy
1	LO: 1.5—2.0 (21—28, 147—196) HI: 14.5—15.0 (206—213, 1,422—1,471) 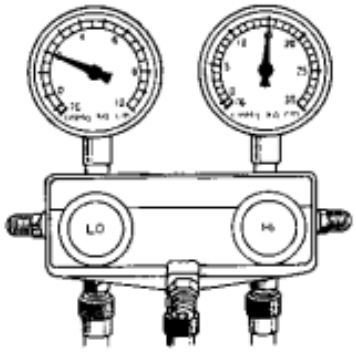 AC0067	Normal cooling	Normally functioning system	
2	During operation, pressure at low pressure side sometimes becomes a vacuum and sometimes normal 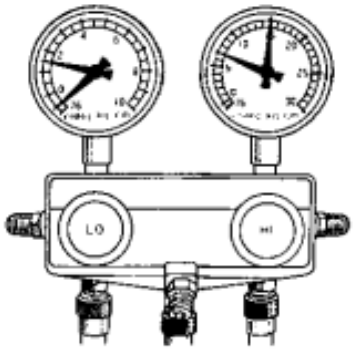 AC0068	Periodically cools and then fails to cool	Moisture present in refrigeration system	(1) Replace receiver (2) Remove moisture in system through repeatedly evacuating air (3) Charge with refrigerant to proper amount
3	Pressure low at both low and high pressure sides 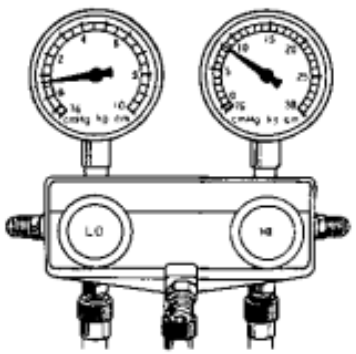 AC0069	• Insufficient cooling • Bubbles seen in sight glass	Insufficient refrigerant	(1) Using gas leak tester, check for leakage (2) Charge refrigerant to proper amount
		• Insufficient cooling • Frost on tubes from receiver to unit	Refrigerant flow obstructed by dirt in receiver	Replace receiver

No.	Gauge reading kg/cm² (psi, kPa)	Condition	Probable cause	Remedy
4	Pressure too high at both low and high pressure side	Insufficient cooling	Insufficient cooling of condenser	(1) Clean condenser (2) Check fan motor operation
5	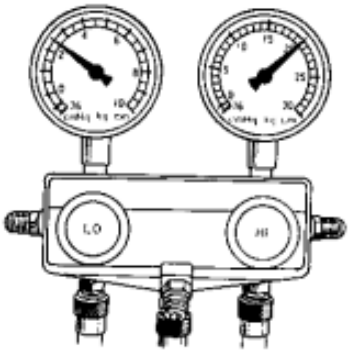 AC0070		Refrigerant over charged	Check amount of refrigerant HINT: Vent out refrigerant throuh gauge manifold low pressure side by gradually opening valve
6			Air present in system	(1) Replace receiver (2) Check compressor oil to see if dirty or insufficient (3) Evacuate air and charge with new refrigerant
7		• Insufficient cooling • Frost or large amount of dew on piping at low pressure side	Expansion valve improperly mounted, heat sensing tube defective (Opens too wide)	(1) Check heat sensing tube installation condition (2) If (1) is normal, check expansion valve (3) Replace if defective
8	Vacuum indicated at low pressure side, very low pressure indicated at high pressure 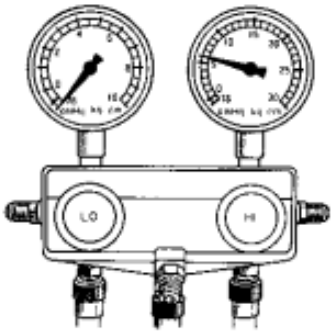 AC0156	• Does not cool (Cools from time to time in some cases) • Frost or dew seen on piping before and after receiver or expansion valve	Refrigerant does not circulate	Alow to stand for some time and then restart operation to determine if trouble is caused by moisture or dirt If caused by moisture refer to procedures step 2 on page AC-20 If caused by dirt, remove expansion valve and clean off dirt by blowing with air. If not able to remove dirt, replace valve Evacuate air and charge with new refrigerant to proper amount For gas leakage from heat sensing tube, replace expansion valve

HINT at No.6
These gauge indications are shown when the refrigeration system has been opened and the refrigerant charged without evacuating air.

No.	Gauge reading kg/cm^2 (psi, kPa)	Condition	Probable cause	Remedy
9	Pressure too high at low pressure side, pressure too low at high pressure side 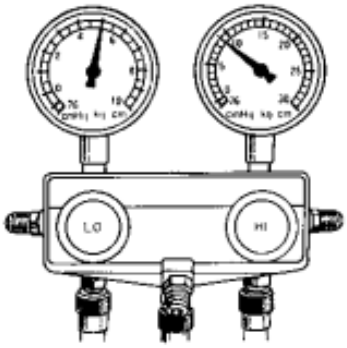 AC0157	Does not cool	Insufficient compression	Repair or replace compressor

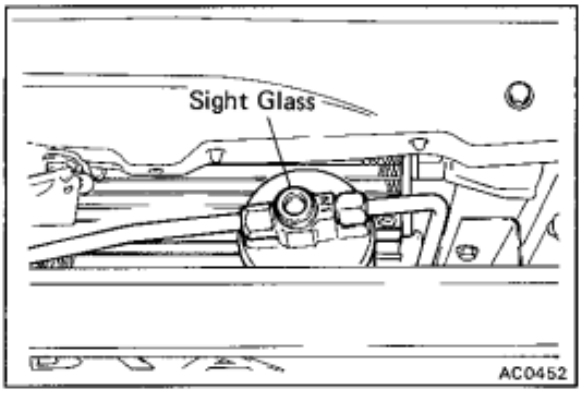

AC0452

Inspection of Refrigerant Volume

1. **RUN ENGINE AT APPROX. 1,500 RPM**
2. **OPERATE A/C AT MAXIMUM COOLING FOR A FEW MINUTES**
3. **INSPECT AMOUNT OF REFRIGERANT**
   Observe the sight glass on the liquid tube.

Item	Symptom	Amount of refrigerant	Remedy
1	Bubbles present in sight glass	Insufficient*	Check for gas leakage with gas leak tester
2	No bubbles present in sight glass	None, sufficient or too much	Refer to items 3 and 4
3	No temperature difference between compressor inlet and outlet	Empty of nearly empty	Evacuate and charge system. Then check for gas leakage with gas leak tester
4	Temperature between compressor inlet and outlet is noticeably different	Proper or too much	Refer to items 5 and 6
5	Immediately after air conditioner is turned off, refrigerant in sight glass stays clear	Too much	Discharge excess refrigerant to specified amount
6	When air conditioner is turned off, refrigerant foams and then stays clear	Proper	Refer to items 3 and 4

*: Bubbles in the sight glass with ambient temperatures higher can be considered normal if cooling is sufficient.

Discharging of Refrigerant in Refrigeration System

(See Air Conditioning Fundamentals and Repairs Pub. No.36950E)

Evacuating of Air in Refrigeration System and Charging with Refrigerant

(See Air Conditioning Fundamentals and Repairs Pub. No.36950E)

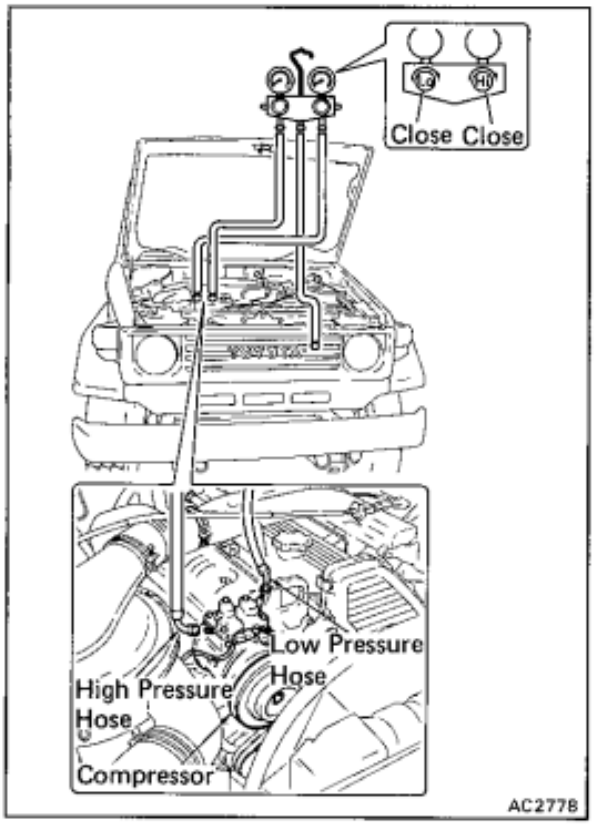

COOLING SYSTEM

Installation of Manifold Gauge Set

1. **CLOSE BOTH HIGH AND LOW HAND VALVES**

2. **CONNECT CHARGING HOSES TO CHARGING VALVES**

   (a) Connect the low pressure hose to the low pressure charging valve and the high pressure hose to the high pressure charging valve.

   (b) Tighten the hose nuts by hand.

   NOTICE: Do not apply compressor oil to the seats of the connection.

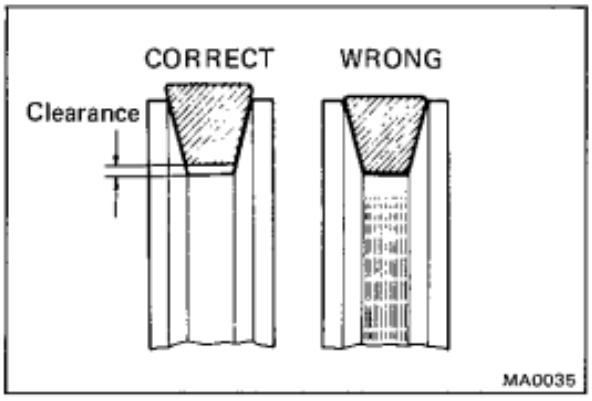

DRIVE BELT

ON-VEHICLE INSPECTION

1. **INSPECT CONDENSER FINS FOR BLOCKAGE OR DAMAGE**

   If the fins are clogged, clean them with pressurized water.

   NOTICE: Be careful not to damege the fins.

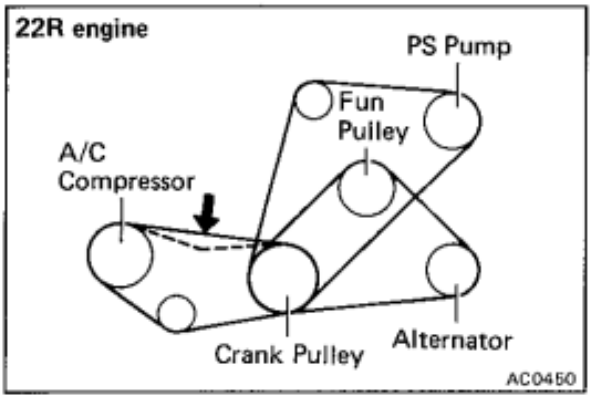

2. **CHECK DRIVE BELT TENSION**

   Drive belt tension at 10 kg (22.0 lb, 98N):

mm (in.)

Engine	New belt	Used belt
22R	7 – 9.5 (0.28 – 0.38)	9.5 – 13 (0.38 – 0.52)
2L-T, 3L	13 – 17 (0.52 – 0.68)	17 – 21 (0.68 – 0.84)
1PZ, 1HZ	12 – 16 (0.48 – 0.64)	16 – 22 (0.64 – 0.88)
3F	11 – 15 (0.44 – 0.60)	15 – 21 (0.60 – 0.84)

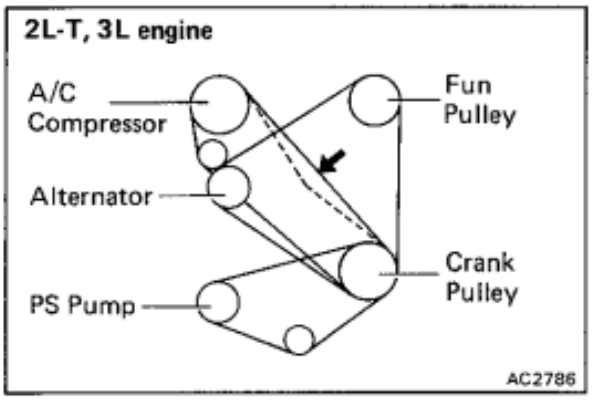

HINT:

- "New belt" refers to a belt which has been used less than 5 minutes on a running engine.
- "Used belt" refers to a belt which has been used on a running engine for 5 minutes or more.
- After installing the drive belt, check that it fits properly in the ribbed grooves.

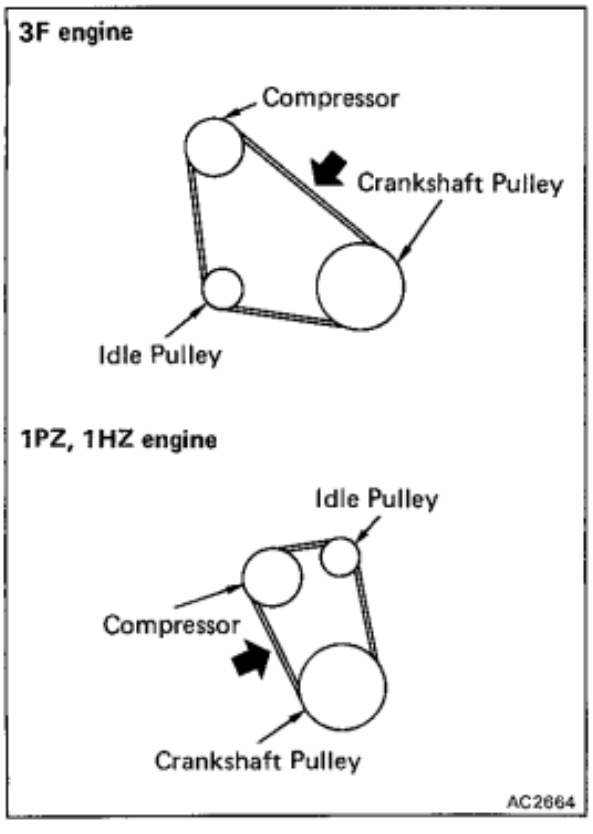

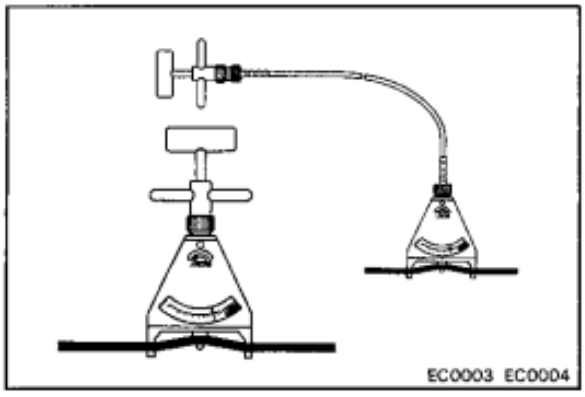

(Reference)

Using SST, check the drive belt tension.

SST 09216-00020 and 09216-00030

New belt 40 — 55 kg

Used belt 20 — 35 kg

COMPRESSOR

On-Vehicle Inspection (Magnetic Clutch)

INSPECT MAGNETIC CLUTCH FOR FOLLOWING

(a) Inspect the pressure plate and the rotor for signs of oil.

(b) Check the clutch bearings for noise and grease leakage.

(c) Connect the positive (+) lead from the battery to the terminal on the magnetic clutch connector and the negative (—) lead to the body ground.

(d) Check that the magnetic clutch is energized.

If the magnetic clutch is not energized, replace the magnetic clutch.

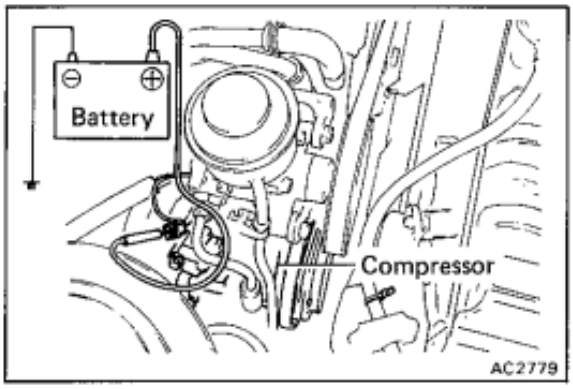

(Compressor)

1. **INSTALL MANIFOLD GAUGE SET**
(See page AC-19)

2. **RUN ENGINE AT APPROX. 2,000 RPM**

3. **INSPECT COMPRESSOR FOR FOLLOWING**

(a) High pressure gauge reading is not lower and low pressure gauge reading is not higher than normal.

(b) Check that the metallic sound.

(c) Check that the leakage from shaft seal.

If defects are found, replace the compressor.

COMPONENTS

22R engine

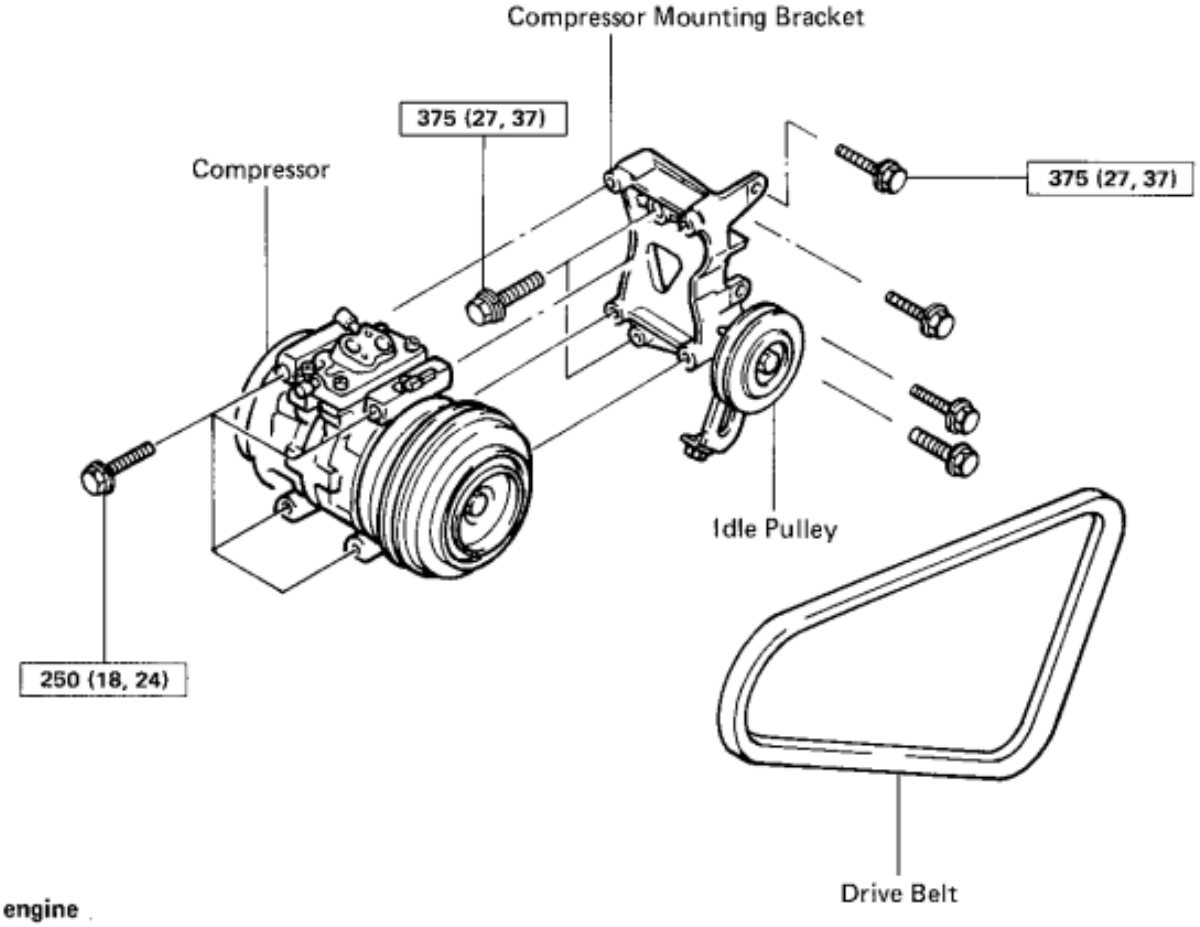

2L-T, 3L engine

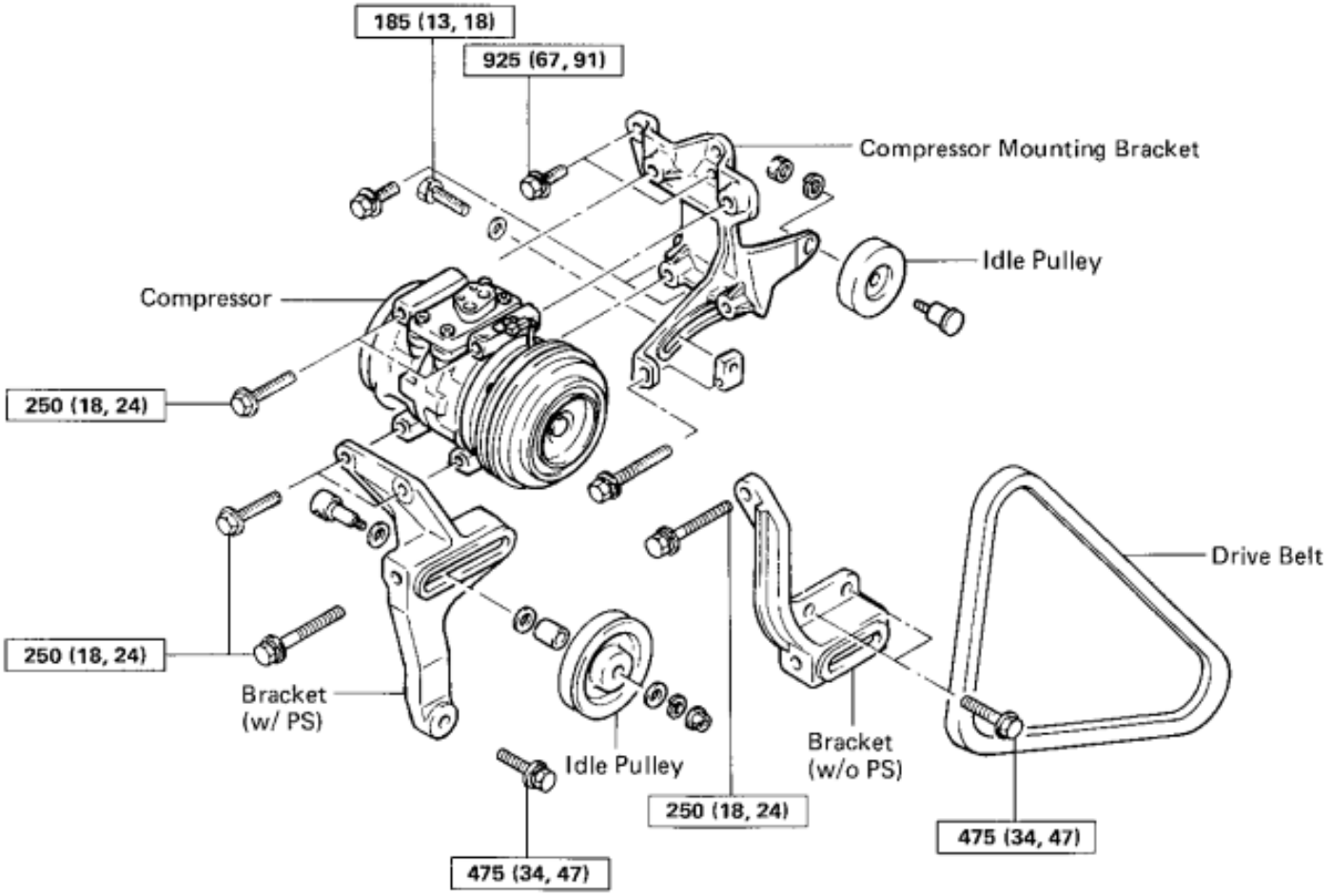

kg-cm (ft-lb, N·m) : Specified torque

AC2791
AC2792

COMPONENTS (CONT'D)

3F engine

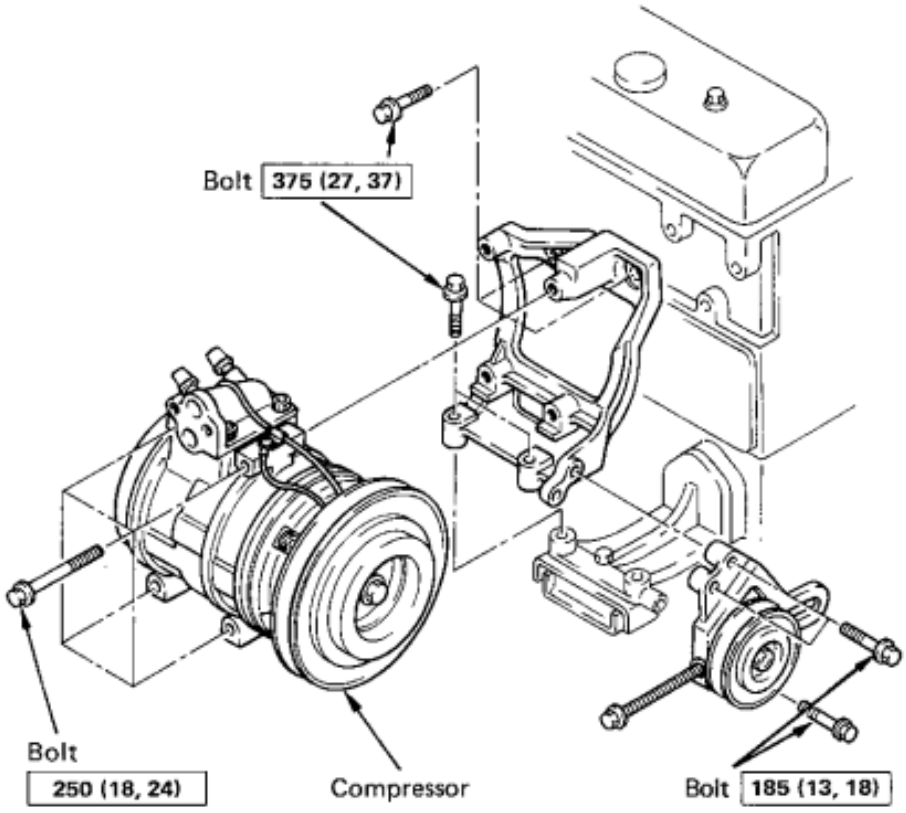

1PZ, 1HZ engine

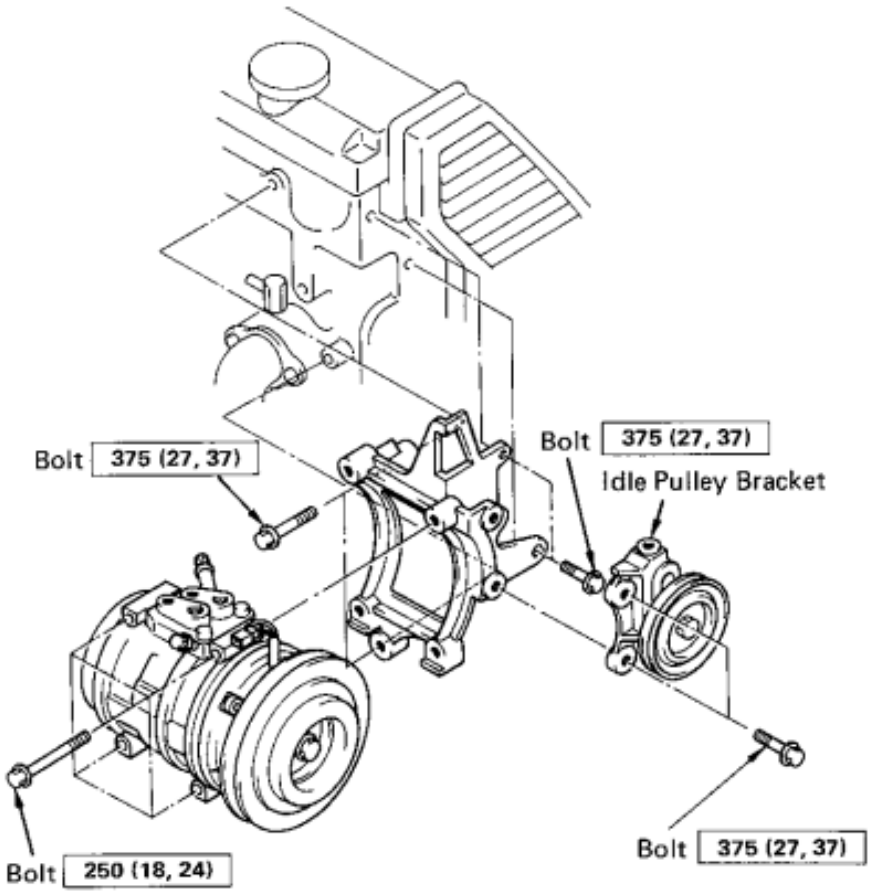

kg-cm (ft-lb, N·m) : Specified torque

AC2793
AC2794

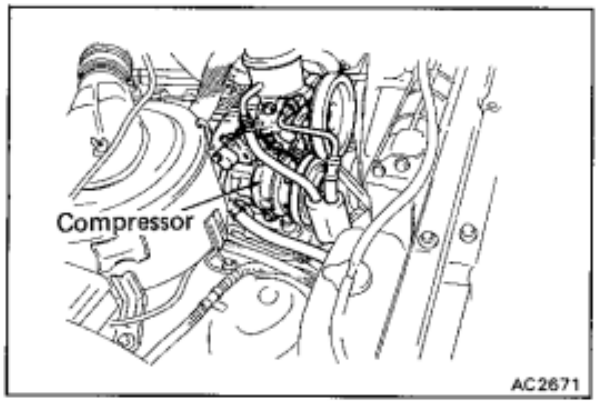

1. **RUN ENGINE AT IDLE WITH A/C ON FOR TEN MINUTES**
2. **STOP ENGINE**
3. **DISCONNECT NEGATIVE CABLE FROM BATTERY**
4. **REMOVE UNDER COVER**
5. **DISCONNECT CONNECTOR FROM MAGNETIC CLUTCH**
6. **DISCHARGE REFRIGERANT FROM REFRIGERATION SYSTEM**
7. **DISCONNECT TWO HOSES FROM COMPRESSOR SERVICE VALVES**

   Cap the open fitting immediately to keep moisture and dust out of the system.
8. **REMOVE COMPRESSOR**
   (a) Loosen the drive belt.
   (b) Remove the compressor mounting bolts and the compressor.

DISASSEMBLY OF MAGNETIC CLUTCH

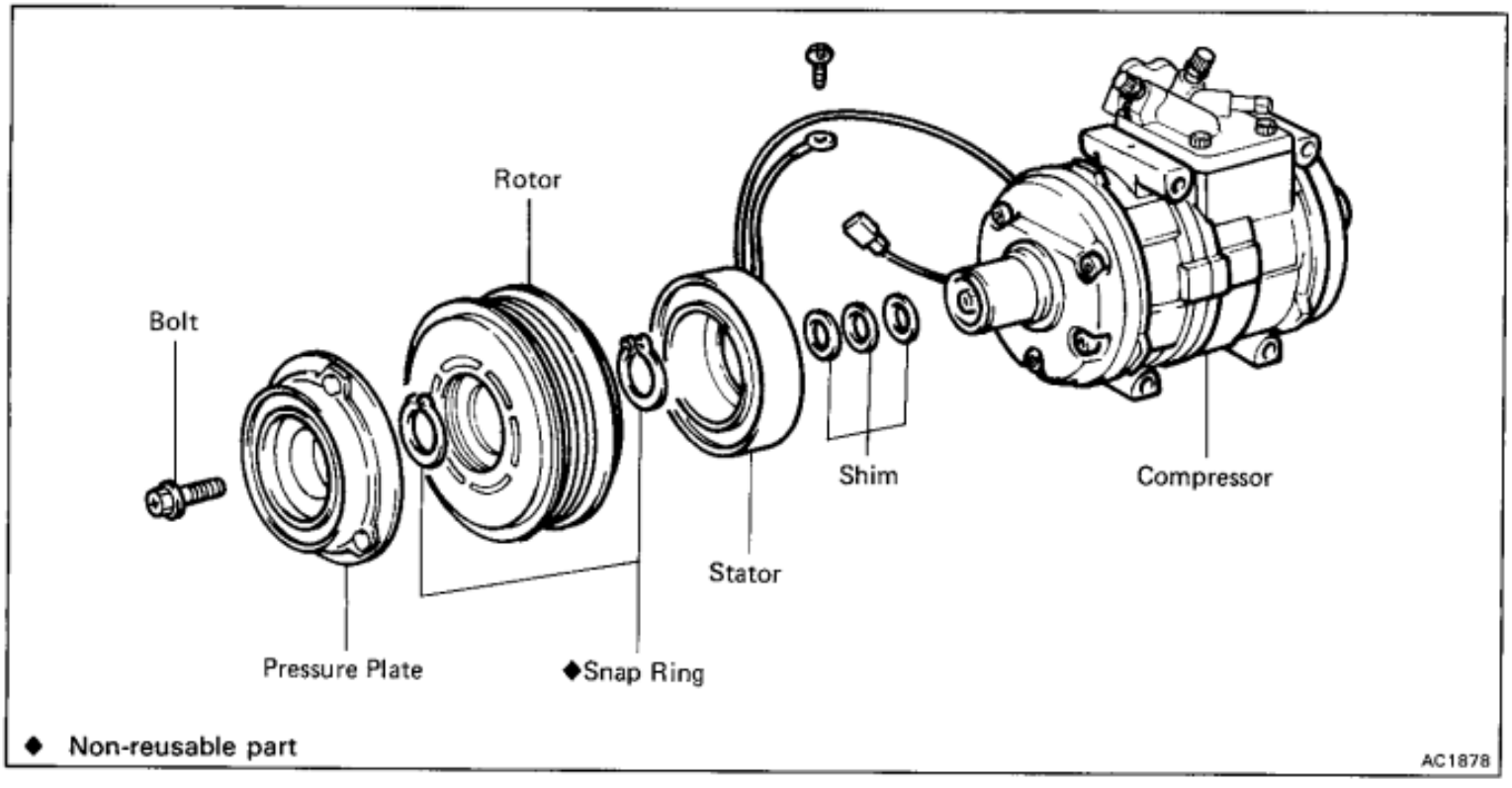

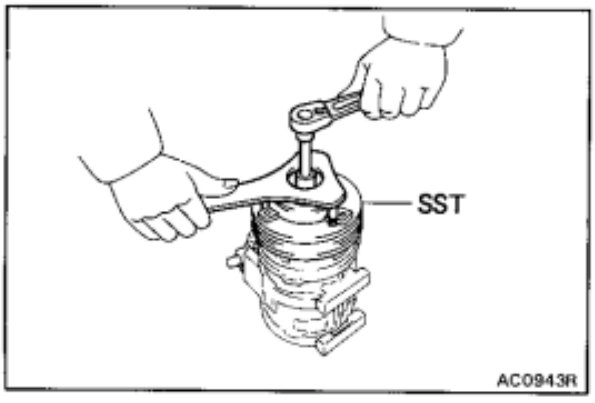

1. **REMOVE PRESSURE PLATE**
   (a) Using SST, remove the shaft bolt.
   SST 07112-76060

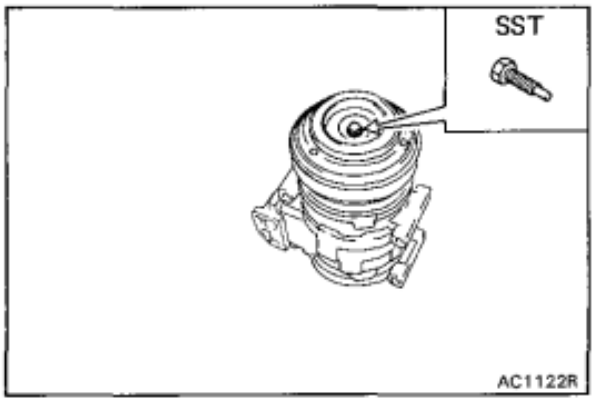

(b) Install SST to the pressure plate.
SST 07112-66040

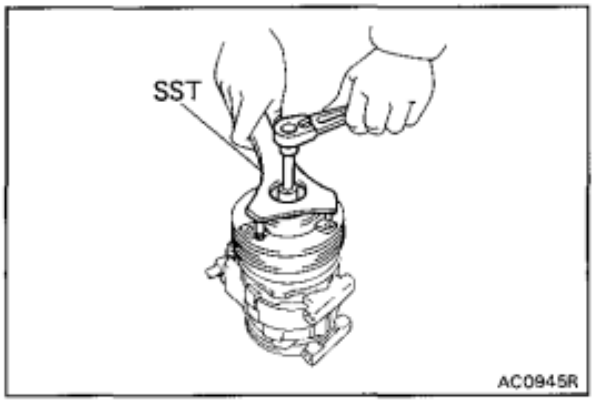

(c) Using SST, remove the pressure plate.
SST 07112-76060

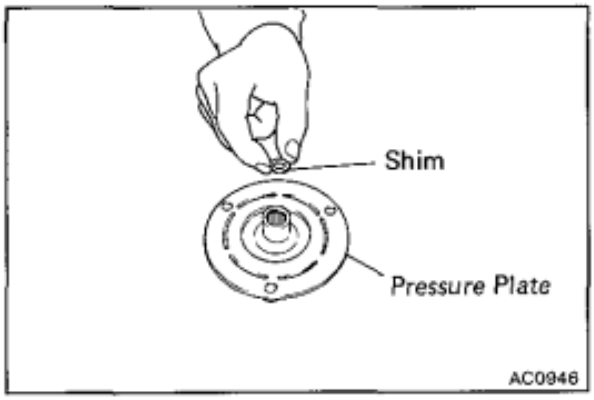

(d) Remove the shims from the pressure plate.

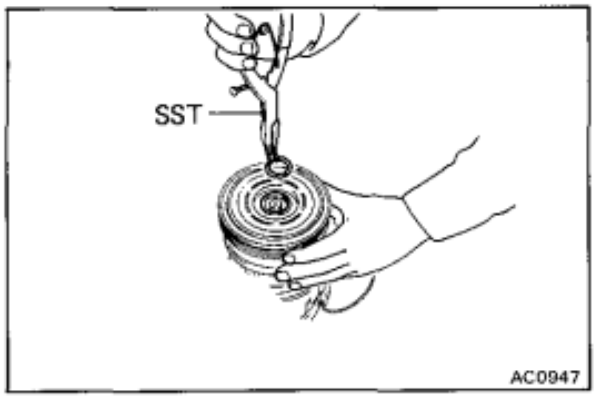

2. REMOVE ROTOR

(a) Using SST, remove the snap ring.
SST 07114-84020

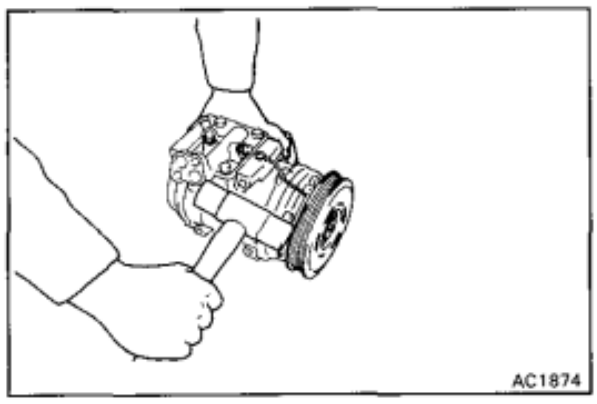

(b) Using a plastic hammer, tap the rotor off the shaft.

NOTICE: Be careful not to damage the pulley when tapping on the rotor.

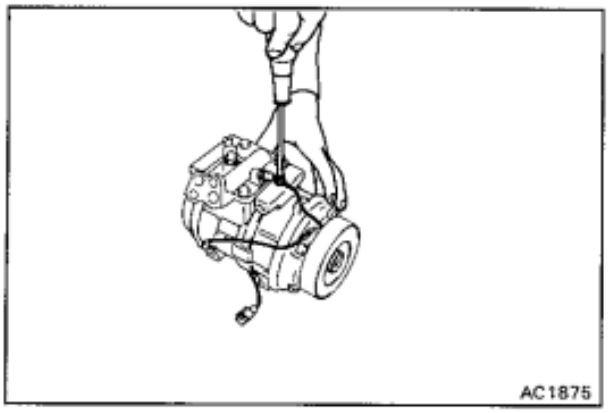

3. REMOVE STATOR

(a) Disconnect the stator lead wire from the compressor housing.

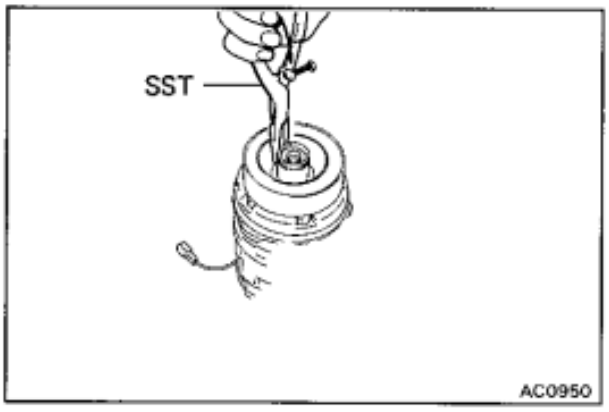

(b) Using SST, remove the snap ring.

SST 07114-84020

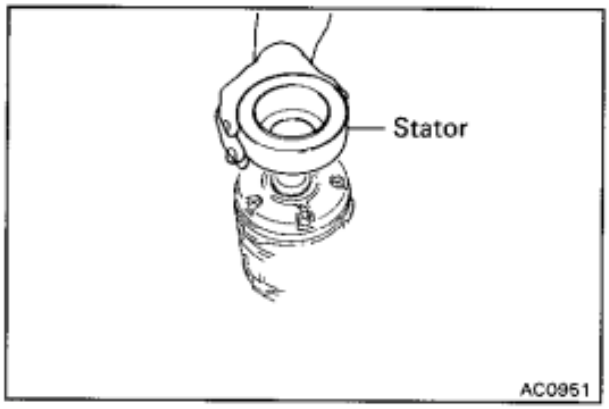

(c) Remove the stator.

REPLACEMENT OF SHAFT SEAL

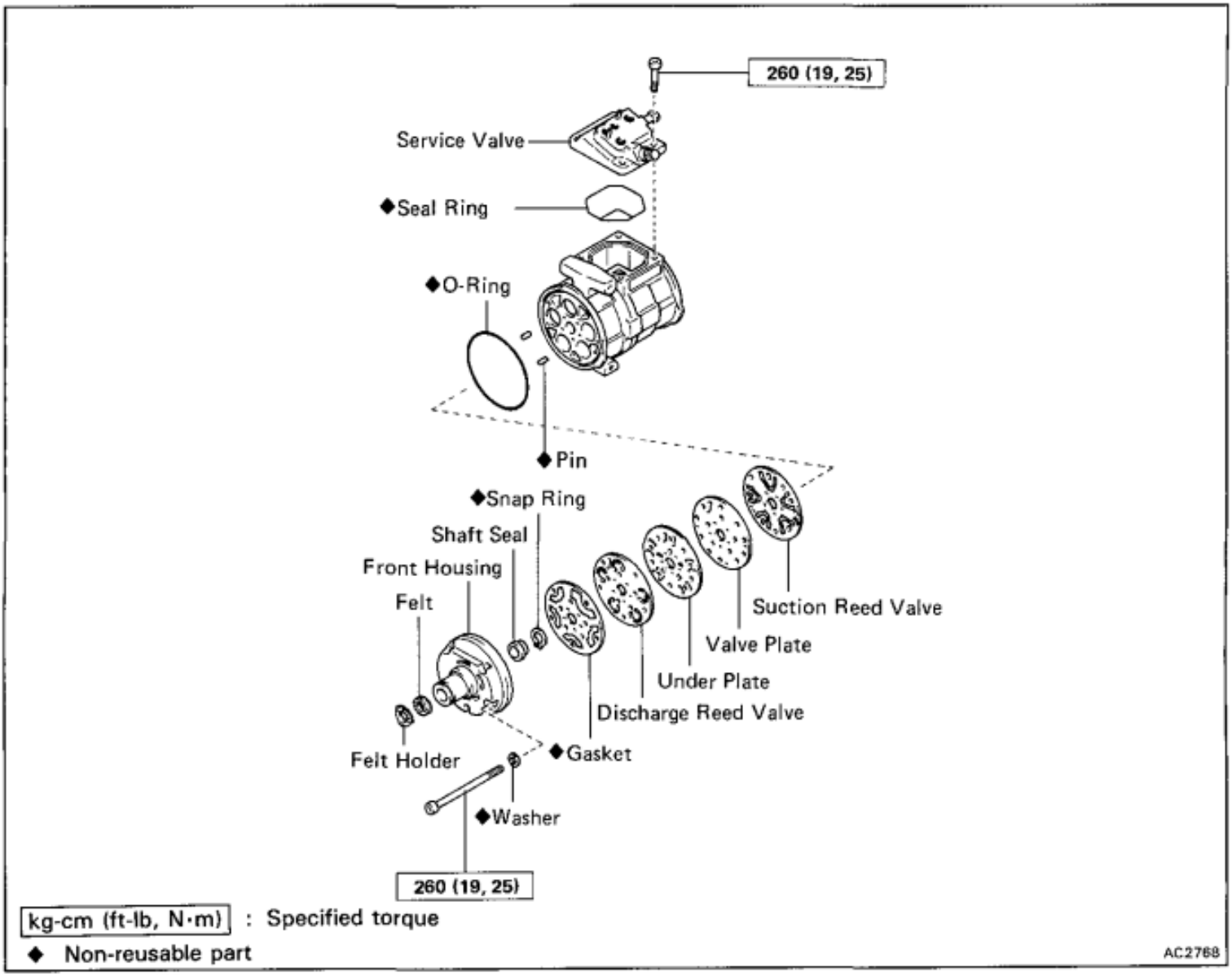

kg-cm (ft-lb, N·m) : Specified torque

◆ Non-reusable part

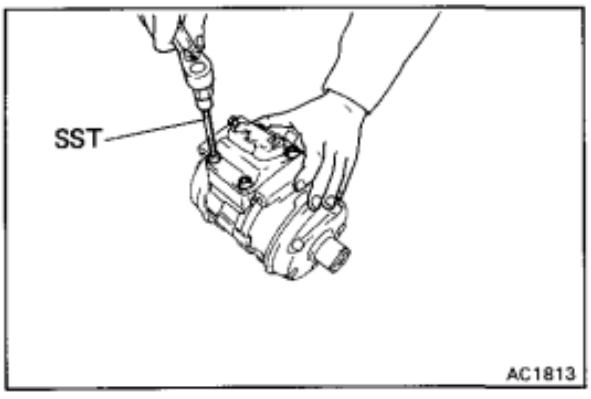

1. REMOVE SERVICE VALVE

(a) Using SST, remove four bolts holding the service valve.

SST 07110-61050

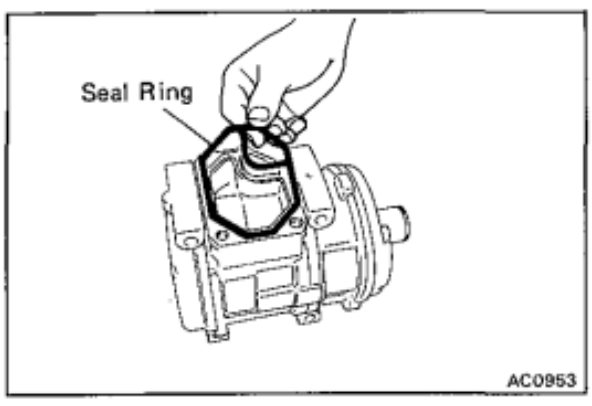

(b) Remove the seal ring from the cylinder block.

Discard the seal ring.

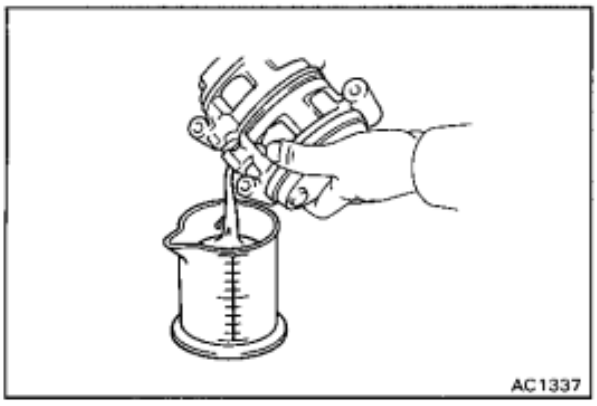

2. DRAIN COMPRESSOR OIL INTO MEASURING FLASK

Measure the quantity of drained oil because the same amount should be replaced later.

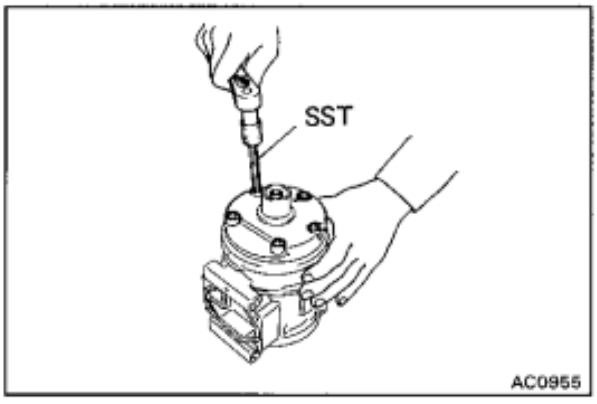

3. REMOVE FRONT HOUSING

(a) Using SST, remove five through bolts.

HINT: Do not reuse five washers.

SST 07110-61050

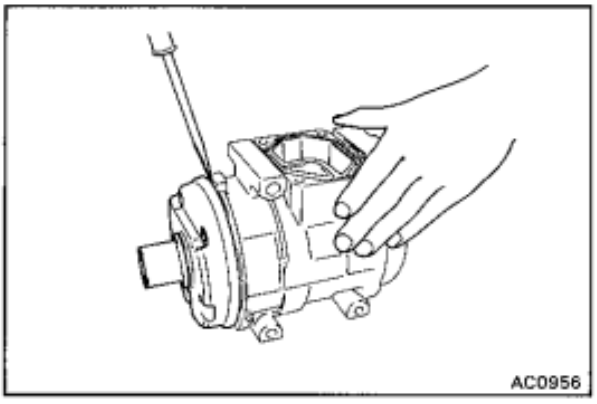

(b) Using a screwdriver, remove the front housing.

NOTICE: Be careful not to scratch the sealing surface of the front housing.

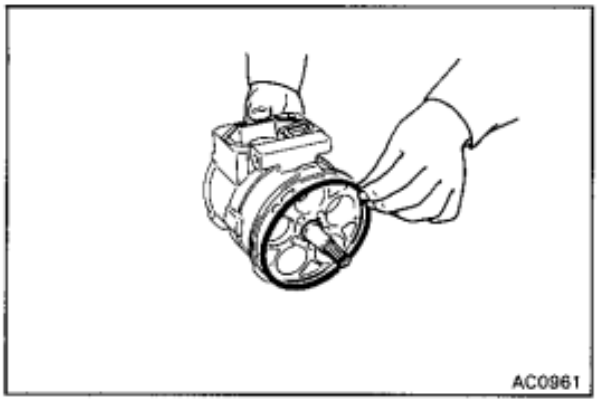

4. REMOVE O-RING

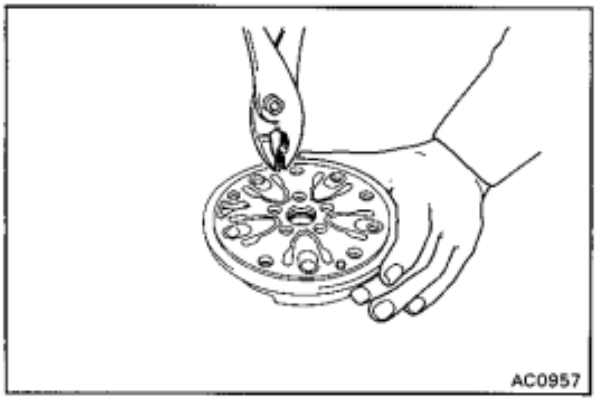

5. REMOVE FRONT VALVE PLATE

(a) Remove two pins from the front housing. Discard the pins.

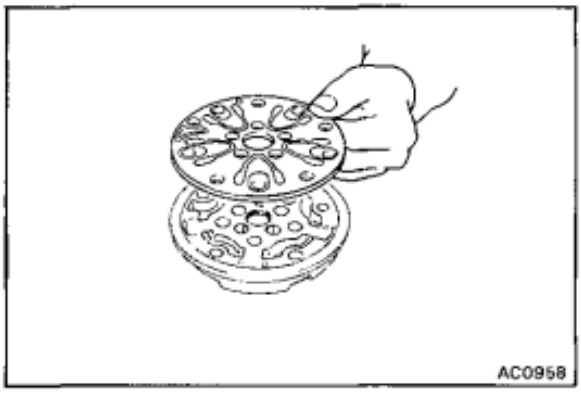

(b) Remove the front valve plate with reed valves.

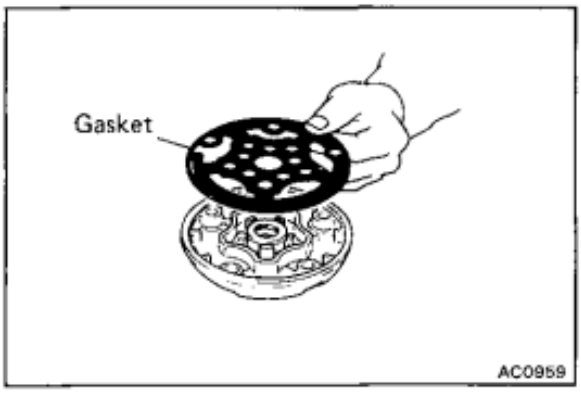

6. REMOVE GASKET

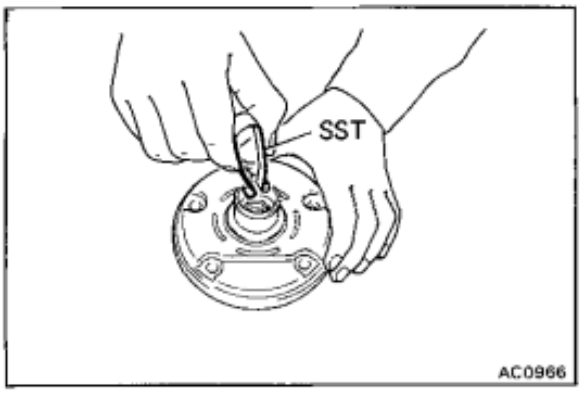

7. REMOVE FELT

(a) Set SST on the felt.

SST 07112-15020

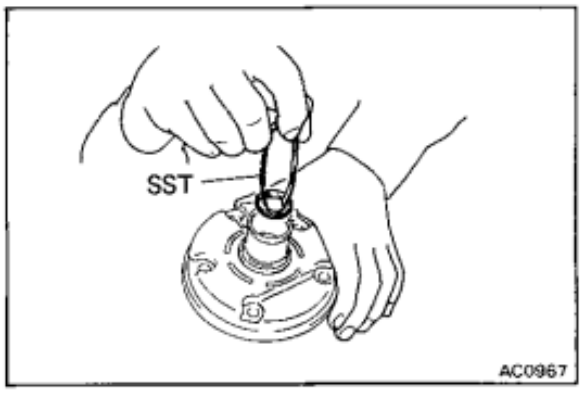

(b) Using SST, pull the felt with felt holder out of front housing.

SST 07112-15020

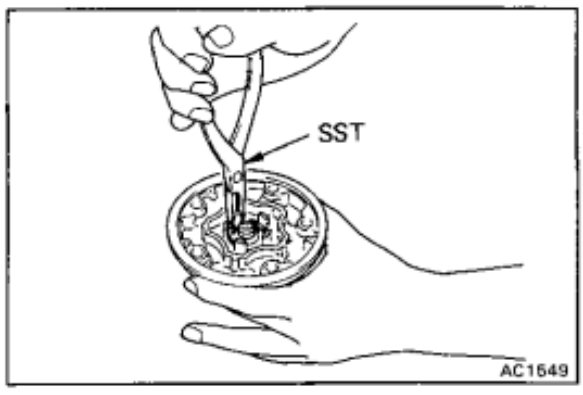

8. REMOVE SHAFT SEAL

(a) Using SST, remove the snap ring from the front housing.

SST 07114-84010

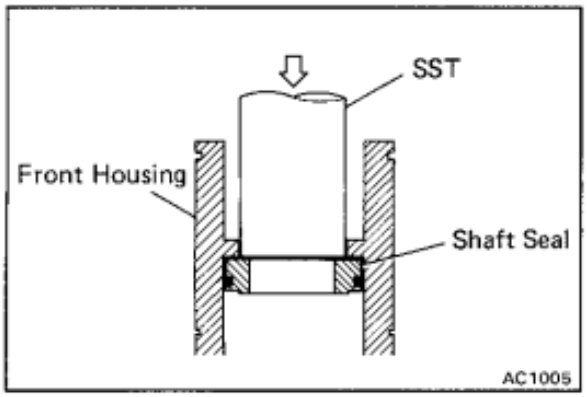

(b) Set SST on the shaft seal.

SST 07112-85030

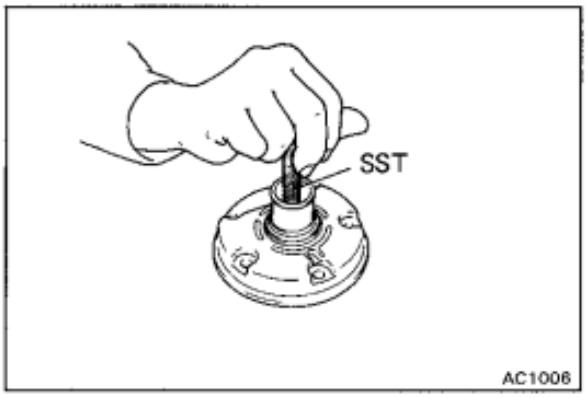

(c) Using SST, put the shaft seal out of the front housing.

SST 07112-85030

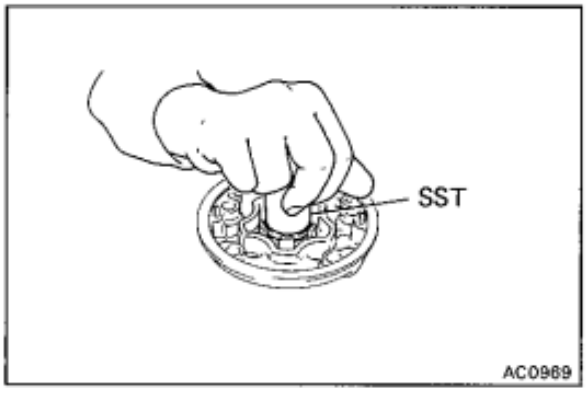

9. INSTALL SHAFT SEAL

(a) Fit shaft seal on SST, and install the shaft seal into the front housing.

SST 07112-85020

HINT: Clean up the surface of the shaft seal with compressor oil.

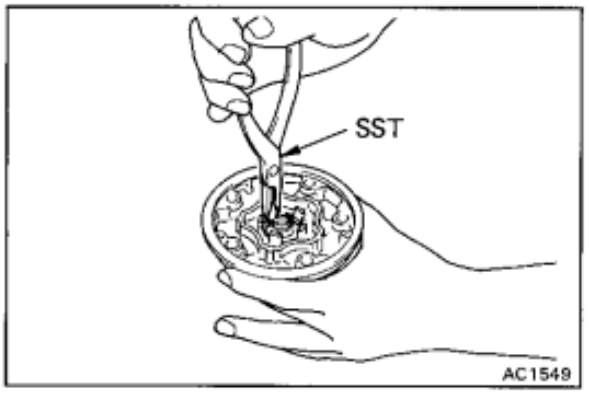

(b) Using SST, install the snap ring into the front housing.

SST 07114-84010

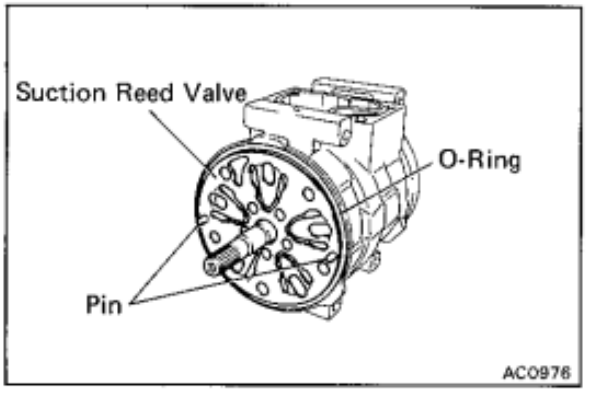

10. INSTALL FRONT VALVE PLATE ON FRONT CYLINDER

(a) Install two pins in the front cylinder.

(b) Lubricate a new O-ring with compressor oil and install it in the front housing.

(c) Install the front suction reed valve over the pins on the front cylinder.

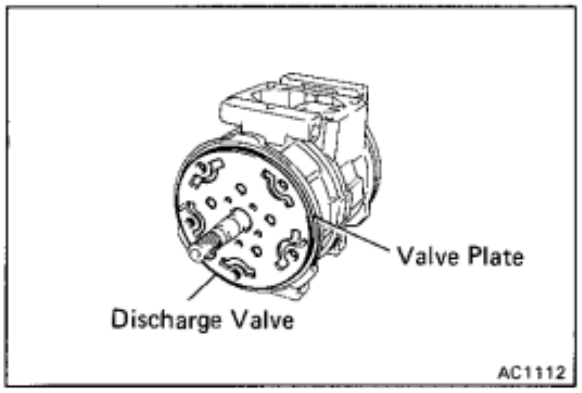

(d) Install the front valve plate with the discharge reed valve over the pins on the front cylinder.

HINT: The front valve plate is marked with an "F".

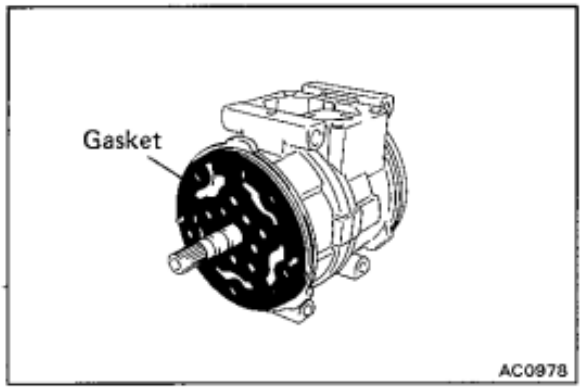

(e) Lubricate a new gasket with compressor oil and install the gasket on the valve plate.

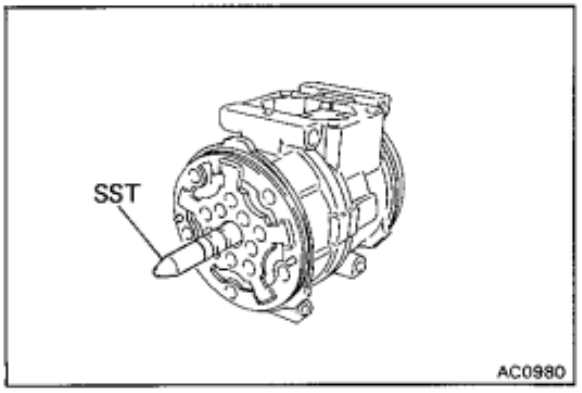

11. INSTALL FRONT HOUSING ON FRONT CYLINDER

(a) Set SST on the shaft to protect the seal lip.

SST 07112-85010

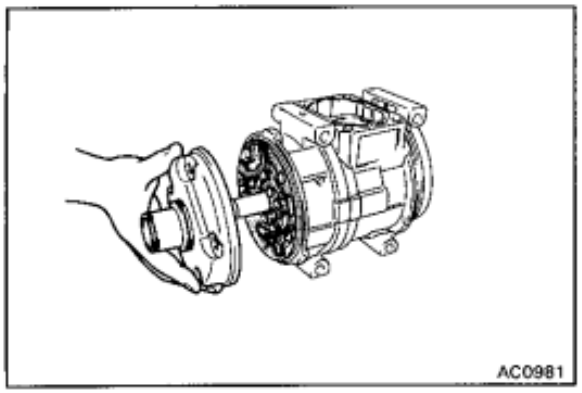

(b) Install the front housing on the front cylinder.

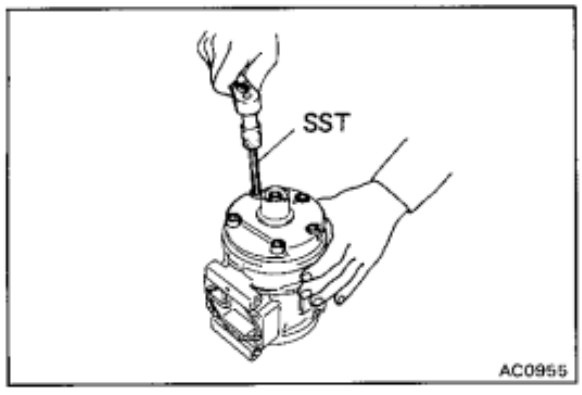

12. TIGHTEN FIVE THROUGH BOLTS

Using SST, gradually tighten the five through bolts in two or three passes.

SST 07110-61050

Torque: 260 kg-cm (19 ft-lb, 25 N·m)

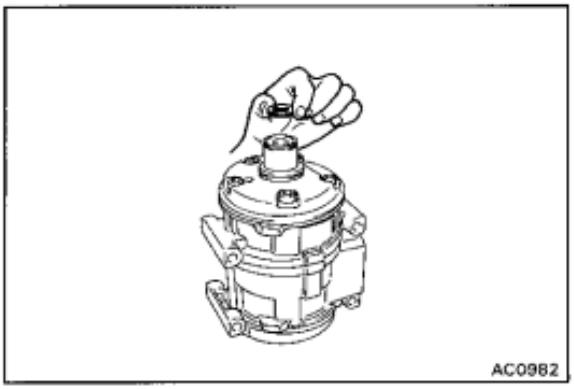
AC0982

13. INSTALL FELT

(a) Set the felt with felt holder to the front housing.

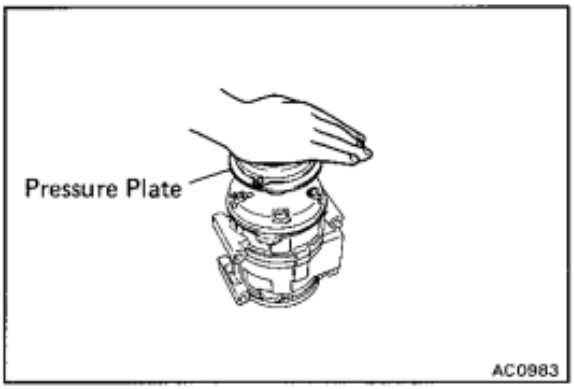

AC0983

(b) Using pressure plate of magnetic clutch, install the felt.

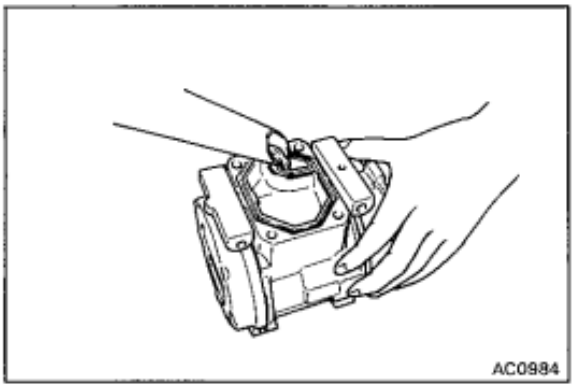
AC0984

14. POUR COMPRESSOR OIL INTO COMPRESSOR

Add the same quantity of oil as was removed, plus 20 cc (0.7 fl.oz), into the compressor.

Compressor oil: DENSOOIL 6, SUNISO No.5GS or equivalent

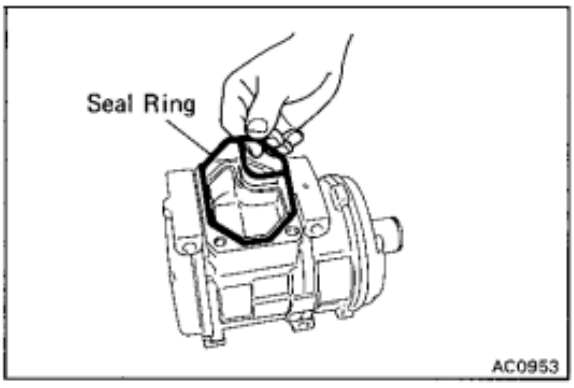

AC0953

15. INSTALL SERVICE VALVE

(a) Lubricate new seal ring with compressor oil.
Install the seal ring in the service valve.

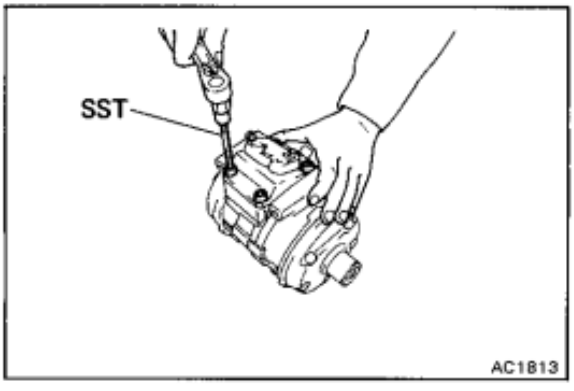

AC1813

(b) Install the service valve on the compressor.
Using SST, tighten the bolts.

SST 07110-61050

Torque: 260 kg-cm (19 ft-lb, 25 N·m)

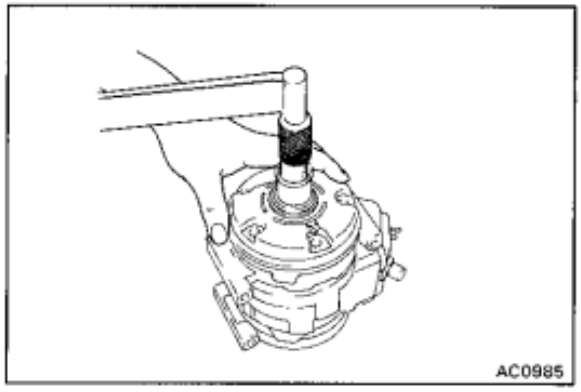

16. **CHECK SHAFT STARTING TORQUE**

Torque: 30 kg-cm (26 in.-lb, 2.9 N·m) or less

ASSEMBLY OF MAGNETIC CLUTCH

(See page AC-25)

1. **INSTALL STATOR**

(a) Install the stator on the compressor.

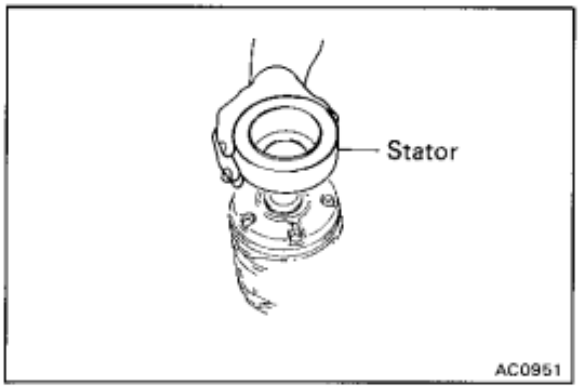

(b) Using SST, install a new snap ring.

SST 07114-84020

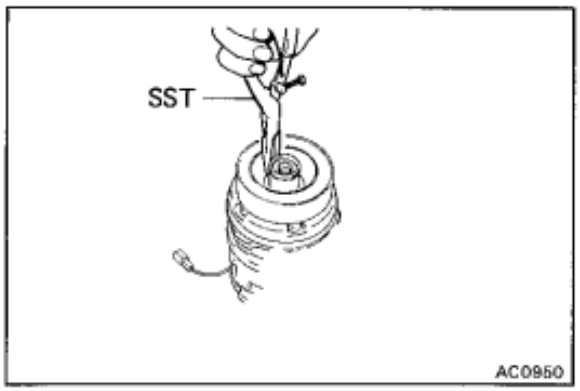

NOTICE: The snap ring should be installed so that its beveled side faces up.

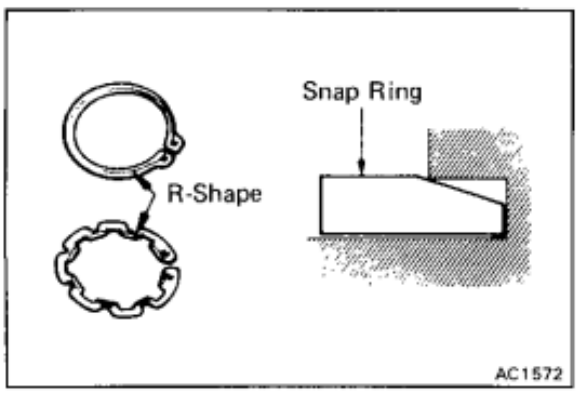

(c) Using SST, fasten the magnetic clutch lead wire to the cylinder block.

Torque: 35 kg-cm (30 in.-lb, 3.4 N·m)

SST 07110-61050

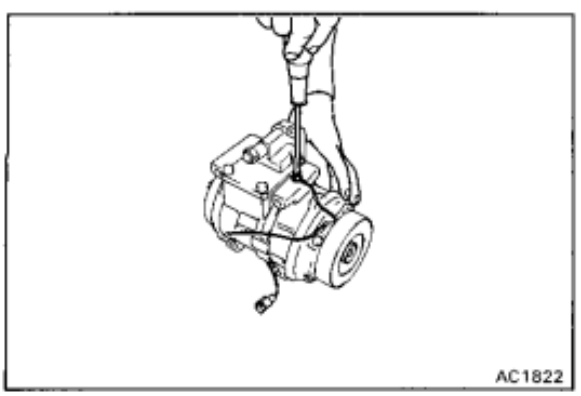

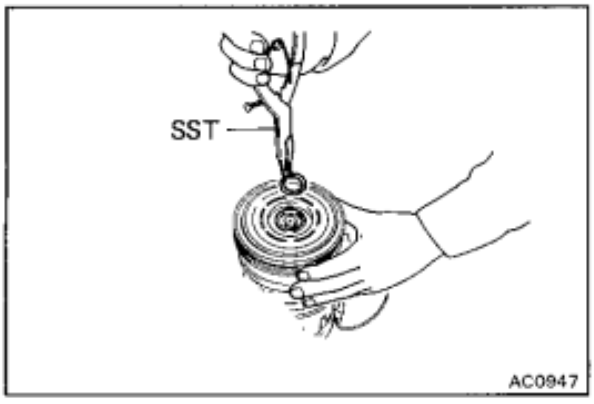

2. INSTALL ROTOR

(a) Install the rotor on the compressor shaft.

(b) Using SST, install a new snap ring.

SST 07114-84020

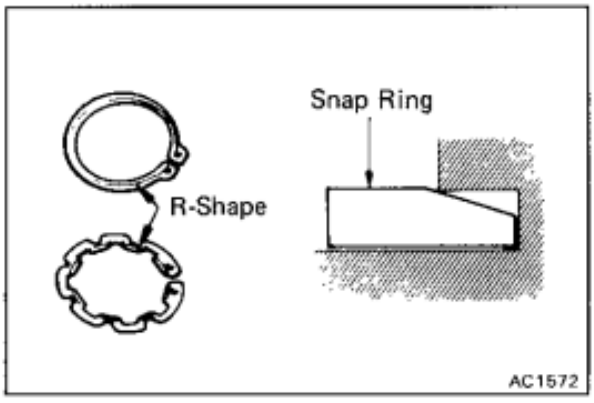

NOTICE: The snap ring should be installed so that its beveled side faces up.

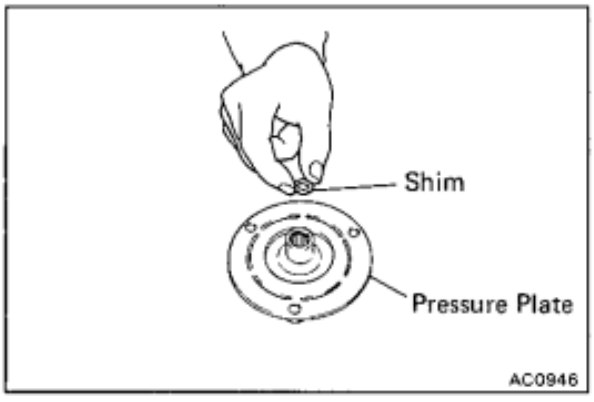

3. INSTALL PRESSURE PLATE

(a) Put the shims on the pressure plate.

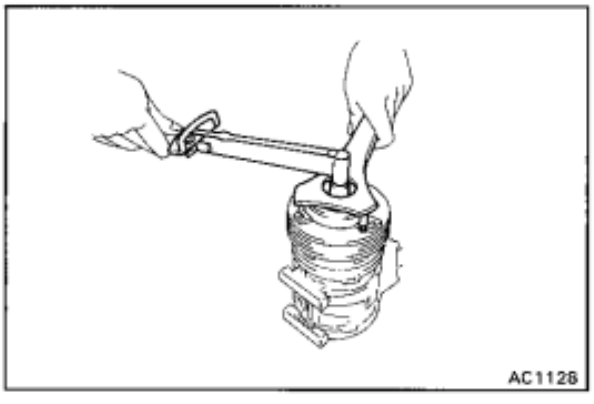

(b) Using SST, install the shaft bolt.

SST 07112-76060

Torque: 135 kg-cm (9.8 ft-lb, 13 N·m)

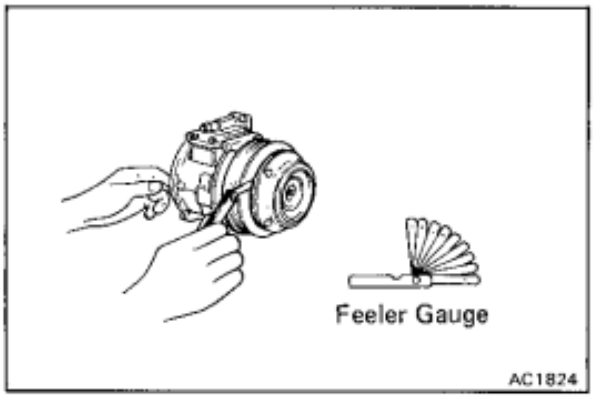

4. CHECK CLEARANCE OF MAGNETIC CLUTCH

Using a feeler gauge, check the clearance between the pressure plate and rotor.

Standard clearance: 0.5 ± 0.15 mm (0.020 ± 0.0059 in.)

If the clearance is not within tolerance, charge the number of shims to obtain the standard clearance.

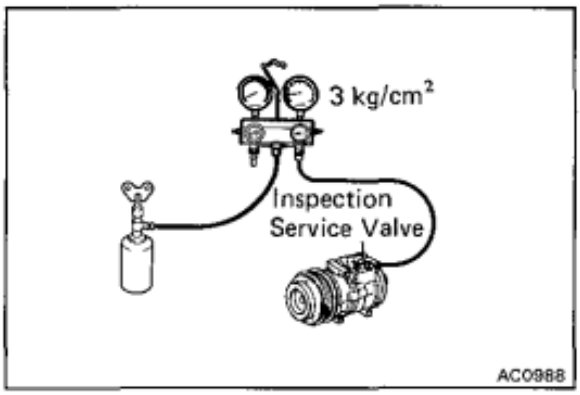

PERFORMANCE TEST OF COMPRESSOR

1. **PERFORM GAS LEAKAGE TEST**

   (a) Install the inspection service valve on the service valve.

   HINT: Use only a TOYOTA supplied inspection service valve to perform the gas leakage test.

   Part No. Suction side 88376-17020
   Discharge side 88376-22020

   (b) Charge the compressor with refrigerant through the charge valve until the pressure is 3 kg/cm² (43 psi, 294 kPa).

   (c) Using a gas leak tester, check the compressor for leaks.

   If leaks are found, check and replace the compressor.

2. **EVACUATE COMPRESSOR AND CHARGE WITH REFRIGERANT**

   Make sure the caps are tight and the compressor is free from moisture and contamination.

   HINT: When storing a compressor for an extended period, charge the compressor with refrigerant or dry nitrogen gas to prevent corrosion.

INSTALLATION OF COMPRESSOR

(See page AC-23, 24)

1. **INSTALL COMPRESSOR WITH THREE MOUNTING BOLTS**

   Torque: 280 kg-cm (20 ft-lb, 27 N·m)

2. **INSTALL DRIVE BELT**
   (See page AC-20)

3. **CONNECT TWO HOSES TO COMPRESSOR SERVICE VALVES**

   Torque: Discharge line 250 kg-cm (18 ft-lb, 25 N·m)
   Suction line 250 kg-cm (18 ft-lb, 25 N·m)

4. **CONNECT CLUTCH LEAD WIRE TO WIRING HARNESS**

5. **CONNECT NEGATIVE CABLE TO BATTERY**

6. **EVACUATE AIR FROM AIR CONDITIONING SYSTEM**

7. **CHARGE AIR CONDITIONING SYSTEM WITH REFRIGERANT AND CHECK FOR GAS LEAKAGE**

   Specified amount:
   Single A/C 900 ± 50 g (31.74 ± 1.76 oz)
   Dual A/C 1,600 ± 50 g (56.43 ± 1.76 oz)

CONDENSER

ON-VEHICLE INSPECTION

1. **CHECK CONDENSER FINS FOR BLOCKAGE OR DAMAGE**

   If the fins are clogged, wash them with water and dry with compressed air.

   NOTICE: Be careful not to damage the fins.

   If the fins are bent, straighten them with a screwdriver or pliers.

2. **CHECK CONDENSER FITTINGS FOR LEAKAGE**

   Repair as necessary.

REMOVAL OF CONDENSER

(See pages AC-4, 5)

1. **DISCHARGE REFRIGERATION SYSTEM (See page AC-19)**
2. **REMOVE FRONT GRILLE AND HOOD LOCK BRACE**
3. **REMOVE RADIATOR UPPER SUPPORT**
4. **DISCONNECT DISCHARGE TUBE FROM CONDENSER INLET FITTING**
5. **DISCONNECT TWO LIQUID LINE TUBES FROM RECEIVER**

   HINT: Cap the open fittings immediately to keep moisture out of the system.

6. **REMOVE RECEIVER**
7. **REMOVE CONDENSER**

   Remove the four bolts.

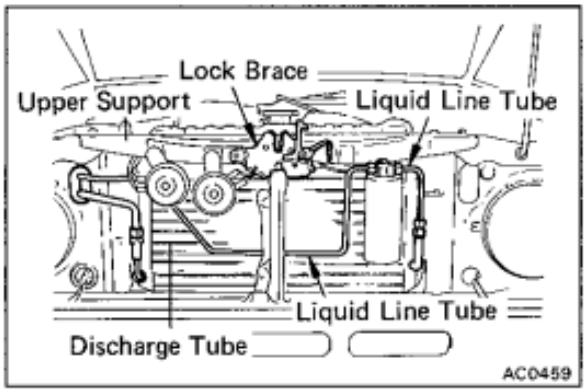

INSTALLATION OF CONDENSER

(See page AC-4, 5)

1. **INSTALL CONDENSER**

   Install the four bolts, making sure the rubber cushions fit on the mounting flanges correctly.

2. **INSTALL RECEIVER**
3. **CONNECT TWO LIQUID LINE TUBES TO RECEIVER AND DISCHARGE TUBE TO CONDENSER**

   Torque: Liquid line tube 135 kg-cm (10 ft-lb, 13 N·m)
   Discharge tube 225 kg-cm (16 ft-lb, 22 N·m)

4. **INSTALL RADIATOR UPPER SUPPORT**
5. **INSTALL FRONT GRILLE AND HOOD LOCK BRACE**
6. **IF CONDENSER IS REPLACED, ADD COMPRESSOR OIL TO COMPRESSOR Add 40 — 50 cc (1.4 — 1.7 oz)**
7. **EVACUATE, CHARGE AND TEST REFRIGERATION SYSTEM (See page AC-19)**

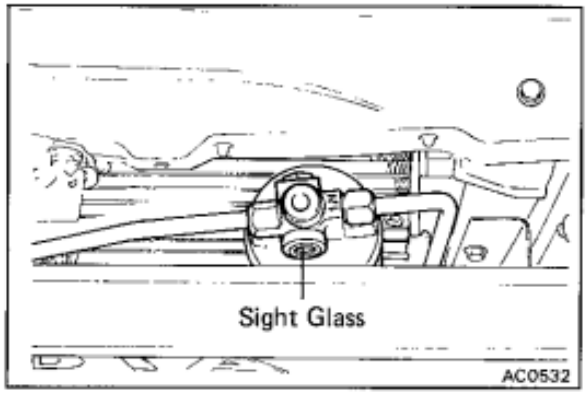

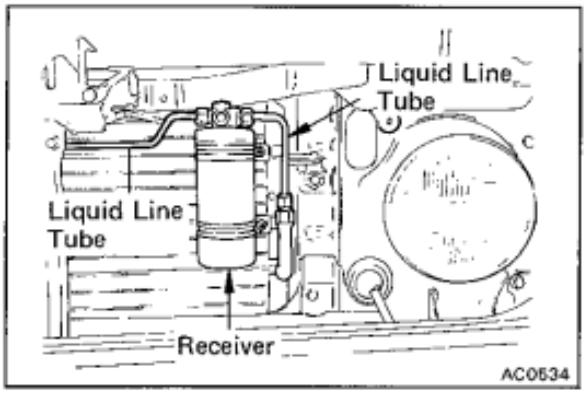

RECEIVER

ON-VEHICLE INSPECTION

CHECK SIGHT GLASS, FUSIBLE PLUG AND FITTINGS FOR LEAKAGE

Use a gas leak tester. Repair as necessary.

REMOVAL OF RECEIVER

(See page AC-4, 5)

1. **DISCHARGE REFRIGERATION SYSTEM**
(See page AC-19)

2. **DISCONNECT TWO LIQUID LINE TUBES FROM RECEIVER**

HINT: Cap the open fittings immediately to keep moisture out of the system.

3. **REMOVE RECEIVER FROM RECEIVER HOLDER**

INSTALLATION OF RECEIVER

(See page AC-4, 5)

1. **INSTALL RECEIVER IN RECEIVER HOLDER**

HINT: Do not remove the caps until ready for connection.

2. **CONNECT TWO LIQUID LINE TUBES TO RECEIVER**

Torque: 135 kg-cm (10 ft-lb, 13 N·m)

3. **IF RECEIVER WAS REPLACED, ADD COMPRESSOR OIL TO COMPRESSOR**

Add 20 cc (0.7 oz)

4. **EVACUATE, CHARGE AND TEST REFRIGERATION SYSTEM** **(See page AC-19)**

COOLING UNIT

ON-VEHICLE INSPECTION OF EXPANSION VALVE

1. **CONNECT MANIFOLD GAUGE TO COMPRESSOR**

2. **CHECK EXPANSION VALVE OPERATION**

(a) Run the engine at fast idle with the air conditioning on.

(b) Check that the low pressure reading is between 0.5 — 5.0 kg/cm^2 (7 — 71 psi, 49 — 490 kPa).

If the reading is too low, check and replace the expansion valve and/or receiver.

If the reading is too high, tighten the remote valve holders and/or replace the expansion valve.

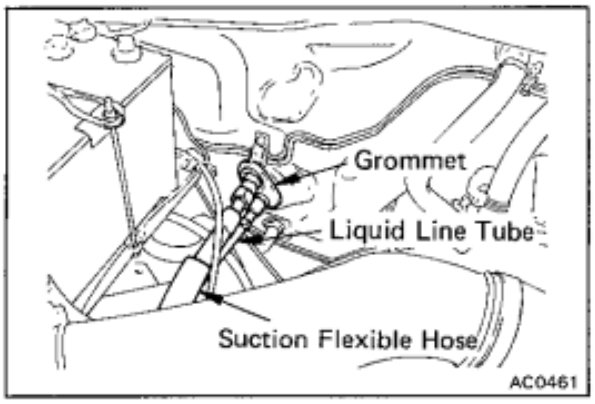

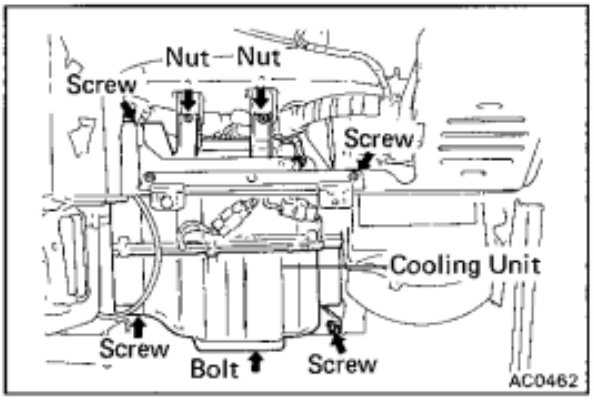

REMOVAL OF COOLING UNIT

1. **DISCONNET NEGATIVE CABLE FROM BATTERY**
2. **DISCHARGE REFRIGERATION SYSTEM**
   (See page AC-19)
3. **DISCONNECT SUCTION FLEXIBLE HOSE FROM COOLING UNIT OUTLET FITTING**
4. **DISCONNECT LIQUID LINE TUBE FROM COOLING UNIT INLET FITTING**

   NOTE: Cap the open fittings immediately to keep moisture out of the system.
5. **REMOVE GROMMETS FROM INLET AND OUTLET FITTINGS**
6. **REMOVE FOLLOWING COMPONENTS:**
   (a) Glove box
   (b) Duct
7. **DISCONNECT FOLLOWING CONNECTORS:**
   (a) Temp. control switch connector
   (b) Connector connected to vehicle wire harness
8. **REMOVE COOLING UNIT**

   Remove the two nuts, the four screws and one bolt.
9. **REMOVE A/C WIRE HARNESS FROM COOLING UNIT**

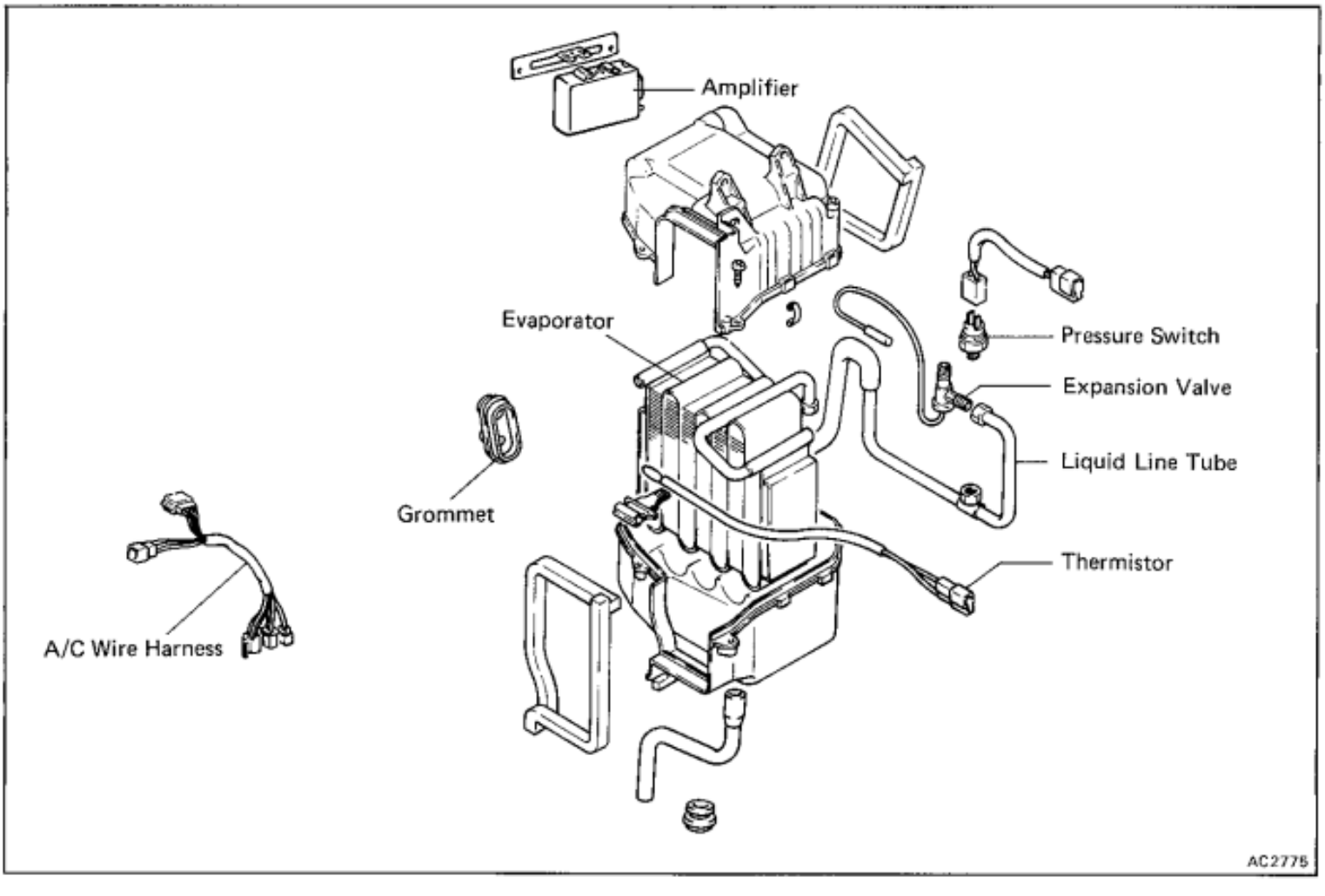

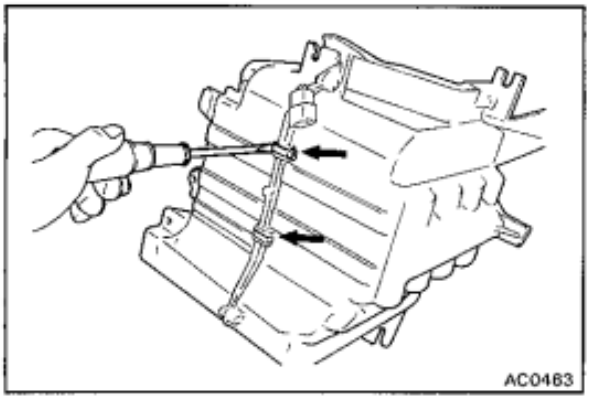

DISASSEMBLY OF COOLING UNIT

(See page AC-39)

1. **REMOVE LOWER AND UPPER CASE FROM EVAPORATOR**

   Using a screwdriver, remove the two clamps and four screws.

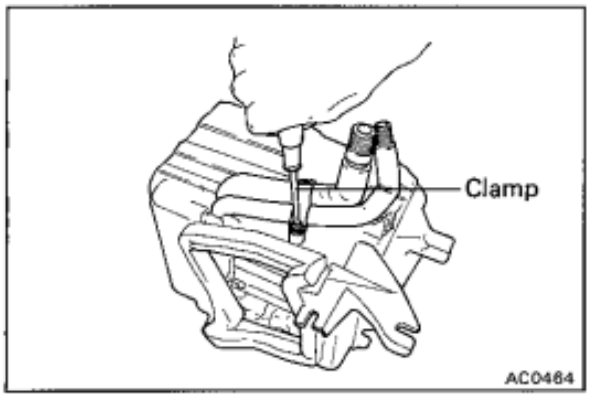

2. **REMOVE CLAMP**

   Remove two screws.

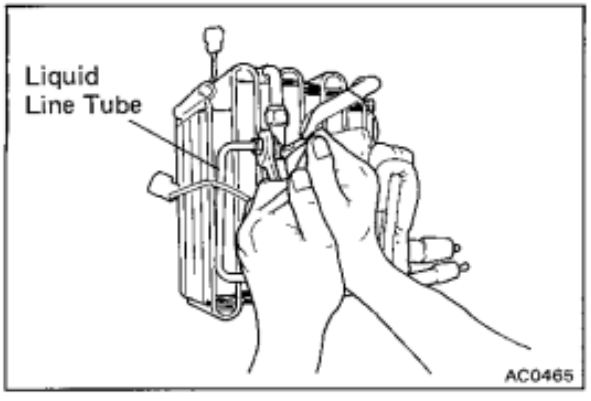

3. **REMOVE COMPONENTS FROM EVAPORATOR**

   (a) Remove the heat insulator.

   (b) Disconnect the liquid line tube from inlet fitting of the expansion valve.

   (c) Disconnect the expansion valve from the inlet fitting of the evaporator.

   (d) Remove the pressure switch, if necessary.

Evaporator

INSPECTION OF EVAPORATOR

1. **CHECK EVAPORATOR FINS FOR BLOCKAGE**

   If the fins are clogged, clean them with compressed air.

   NOTICE: Never use water to clean the evaporator.

2. **CHECK FITTINGS FOR CRACKS OR SCRATCHES**

   Repair as necessary.

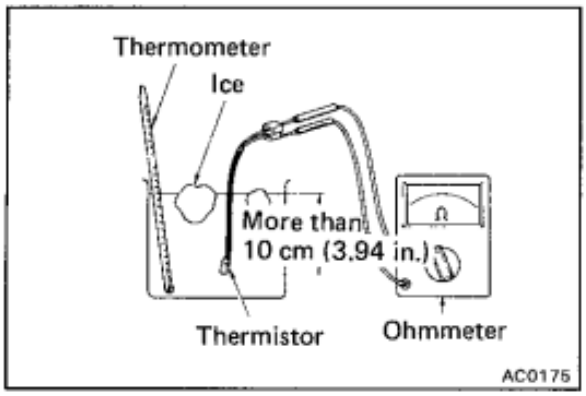

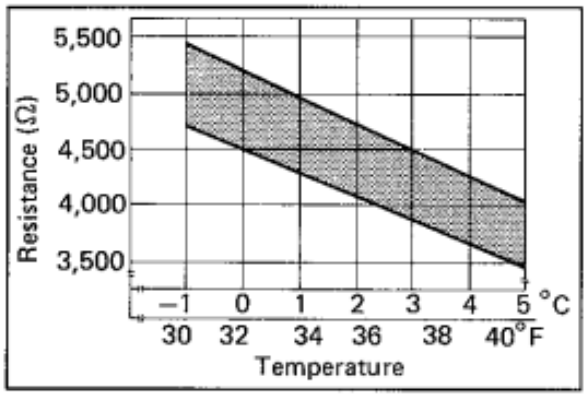

Thermistor

INSPECTION OF THERMISTOR

CHECK THERMISTOR OPERATION

(a) Place the thermistor in cold water. While varying the temperature of the water, measure the resistance at the connector and, at the same time, measure the temperature of the water with a thermometer.

(b) Compare the two readings on the chart.

If the intersection is not between the two lines, replace the thermistor.

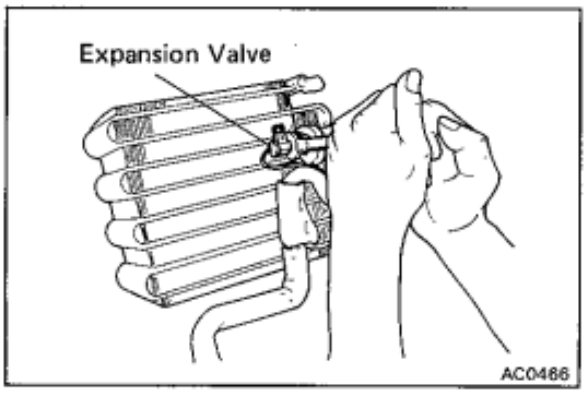

ASSEMBLY OF COOLING UNIT

(See page AC-39)

1. INSTALL COMPONENTS ON EVAPORATOR

(a) Connect the expansion valve to the inlet fitting of the evaporator. Torque the nut.

Torque: 235 kg-cm (17 ft-lb, 23 N·m)

HINT: Be sure that the O-ring is positioned on the tube fitting.

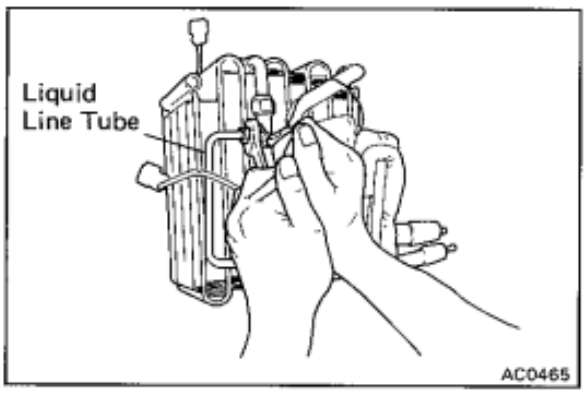

(b) Connect the liquid line tube to the inlet fitting of the expansion valve. Torque the nut.

Torque: 135 kg-cm (10 ft-lb, 13 N·m)

(c) Install the pressure switch, if removed.

Torque: 135 kg-cm (10 ft-lb, 13 N·m)

(d) Install the heat insulator.

2. INSTALL THERMISTOR ON EVAPORATOR

3. INSTALL UPPER AND LOWER CASES ON EVAPORATOR

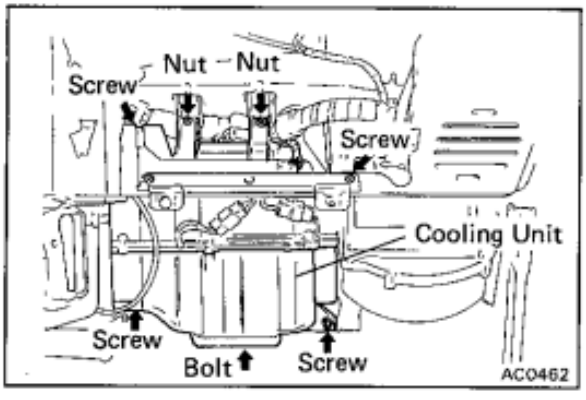

INSTALLATION OF COOLING UNIT

1. INSTALL A/C WIRE HARNESS TO COOLING UNIT

2. INSTALL COOLING UNIT

Install the cooling unit with the two nuts, the four screws and one bolt.

NOTICE: Be careful not to pinch the wire harness while installing the cooling unit.

3. INSTALL GLOVE BOX AND DUCT

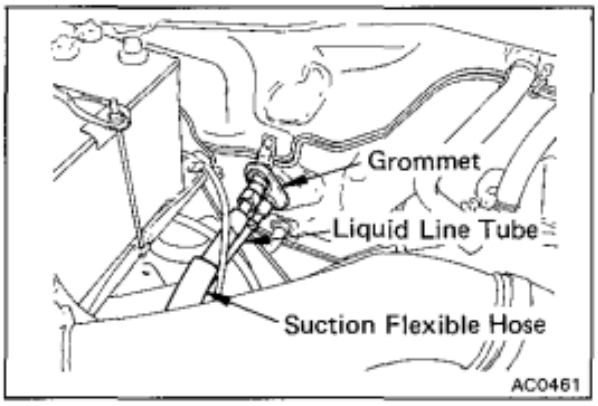

4. **INSTALL GROMMETS ON INLET AND OUTLET FITTINGS**
5. **CONNECT LIQUID LINE TUBE TO COOLING UNIT INLET FITTINGS**

   Torque: 135 kg-cm (10 ft-lb, 13 N·m)
6. **CONNECT SUCTION FLEXIBLE HOSE TO COOLING UNIT OUTLET FITTING**

   Torque: 325 kg-cm (24 ft-lb, 32 N·m)
7. **IF EVAPORATOR WAS REPLACED, ADD COMPRESSOR OIL TO COMPRESSOR**

   Add 40 — 50 cc (1.4 — 1.7 oz)
8. **CONNECT NEGATIVE CABLE TO BATTERY**
9. **EVACUATE, CHARGE AND TEST REFRIGERATION SYSTEM (See page AC-20)**

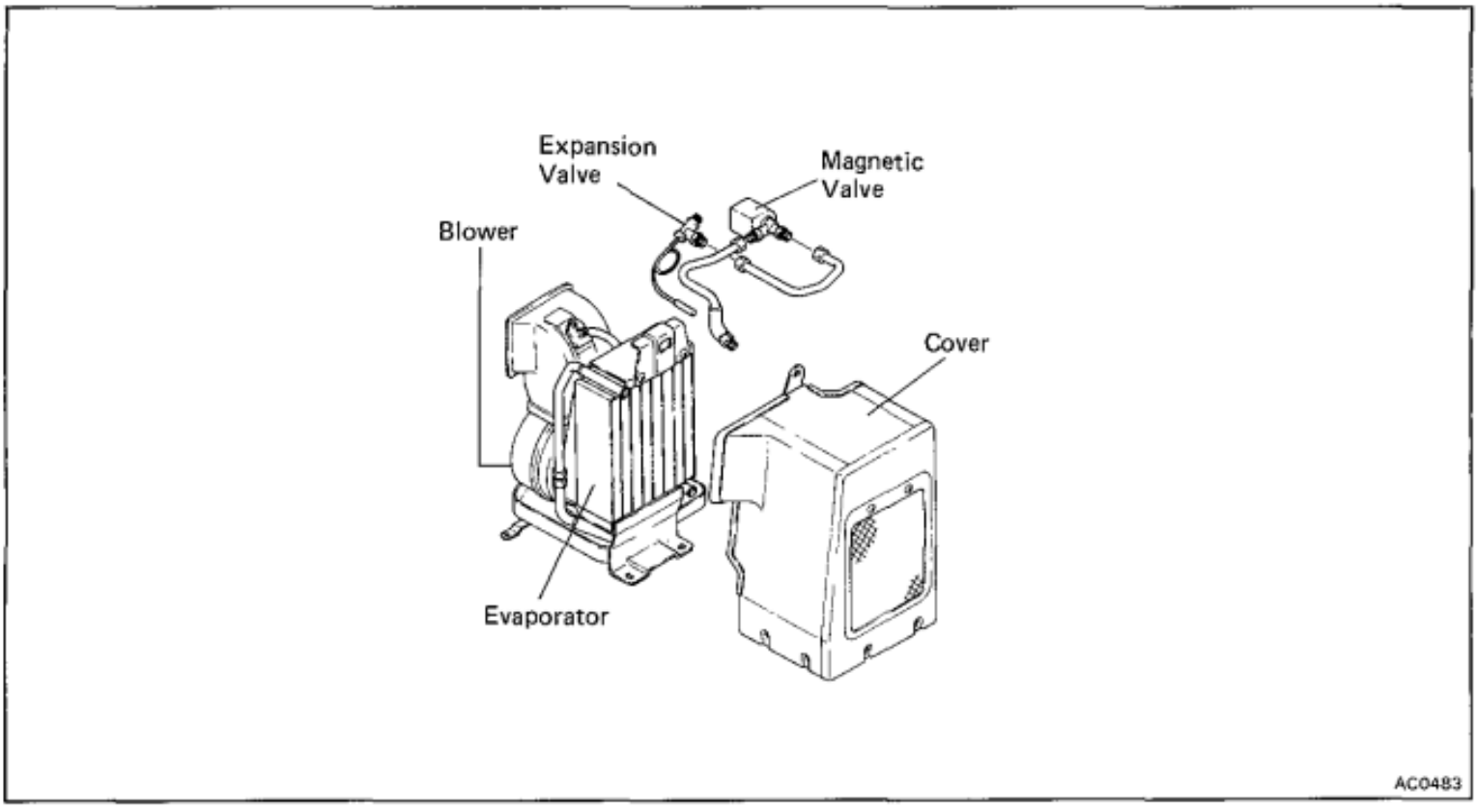

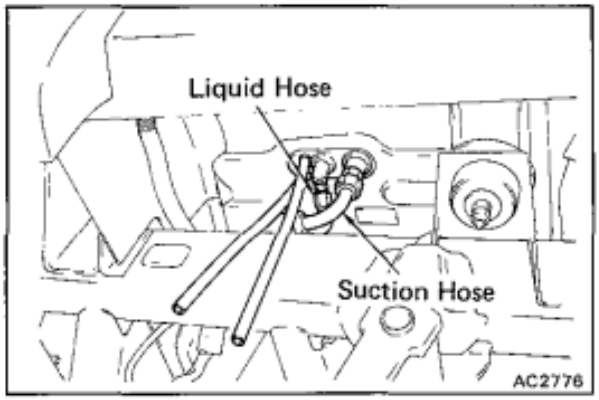

REAR COOLING UNIT

REMOVAL OF COOLING UNIT

1. **DISCONNECT SUCTION AND LIQUID HOSE**

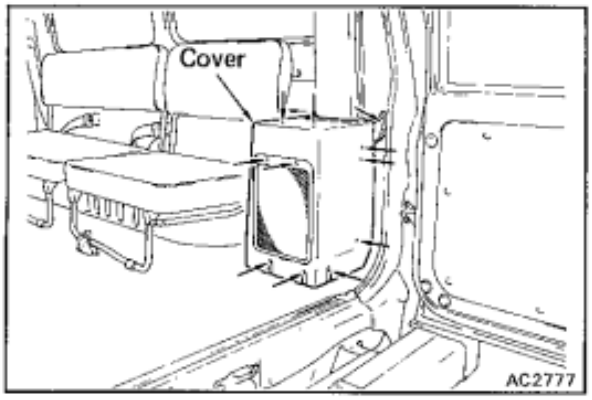

2. **REMOVE COVER**

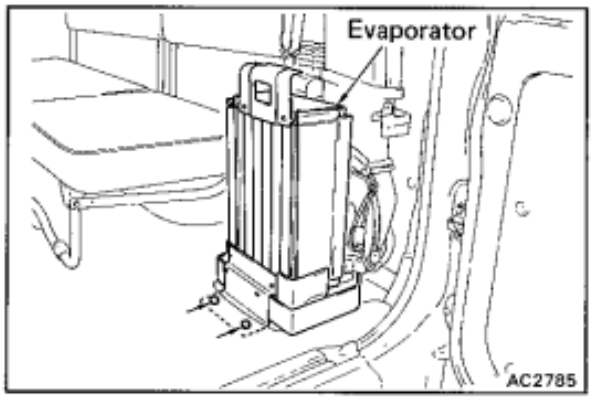

3. **REMOVE REAR COOLING UNIT FROM BODY**

DISASSEMBLY OF REAR COOLING UNIT

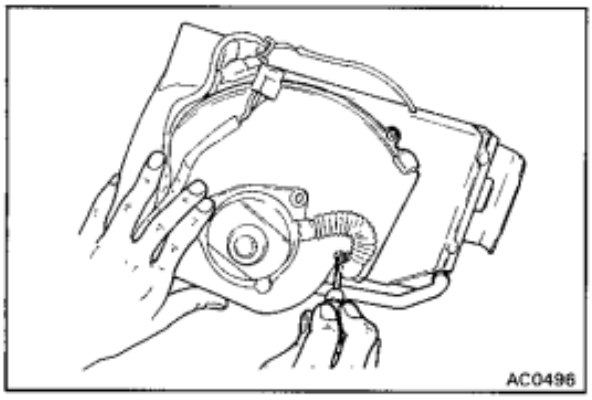

1. **REMOVE BLOWER**

   Remove four screws.

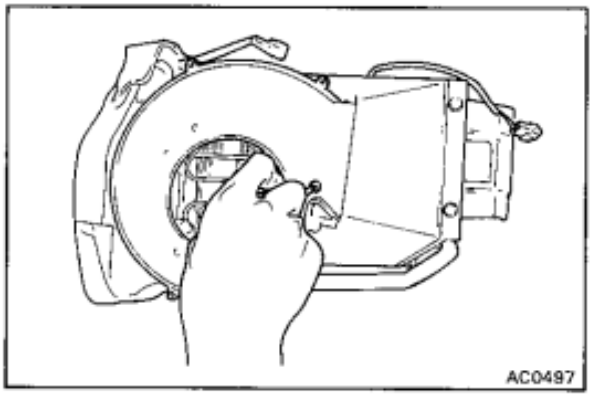

2. **REMOVE BLOWER COVER**

   Remove five screws.

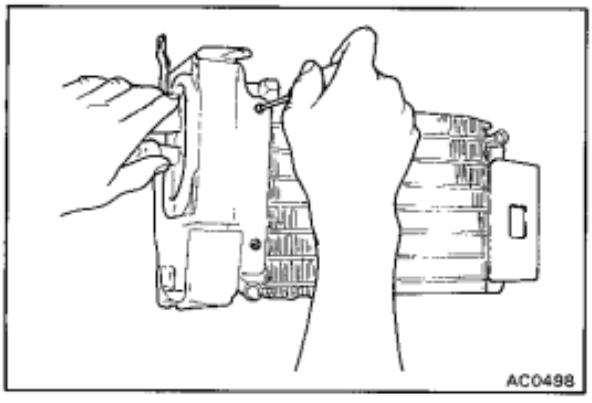

3. **REMOVE REAR COOLING UNIT STAY**

   Remove two long screws.

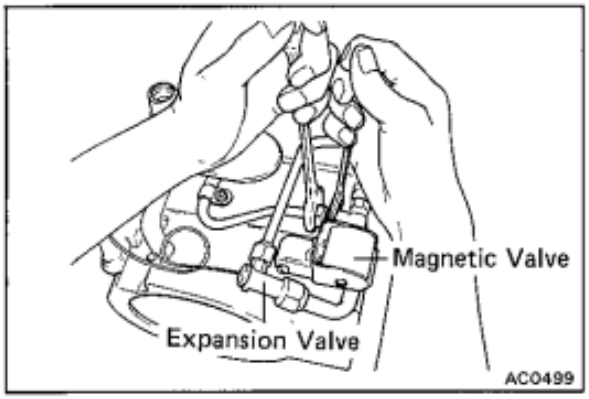

4. **REMOVE COMPONENTS FROM REAR COOLING UNIT**
   (a) Remove the magnetic valve from the cooling unit.
   (b) Disconnect the magnetic valve from inlet fitting of expansion valve.
   (c) Disconnect the expansion valve from the inlet fitting of the evaporator.
   (d) Remove the pressure switch if necessary.

5. **CHECK THERMISTOR AND EXPANSION VALVE IN SAME ORDER AS FRONT COOLING UNIT AND EXPANSION VALVE**

ASSEMBLY AND INSTALLATION OF REAR COOLING UNIT

ASSEMBLE AND INSTALL REAR COOLING UNIT IN REVERSE SEQUENCE OF REMOVAL AND DISASSEMBLY

Torque:	**Suction Hose**	**135 kg-cm (10 ft-lb, 13 N·m)**
	Discharge Hose	**325 kg-cm (24 ft-lb, 32 N·m)**

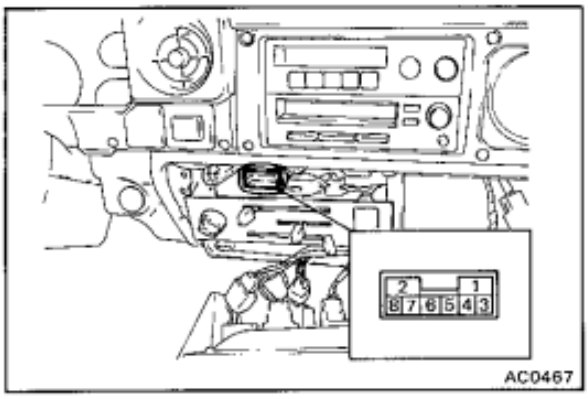

TEMP. CONTROL RESISTOR

ON-VEHICLE INSPECTION

1. **DISCONNECT NEGATIVE CABLE FROM BATTERY**
2. **REMOVE CENTER CLUSTER**
3. **DISCONNECT TEMP. CONTROL RESISTOR CONNECTOR**

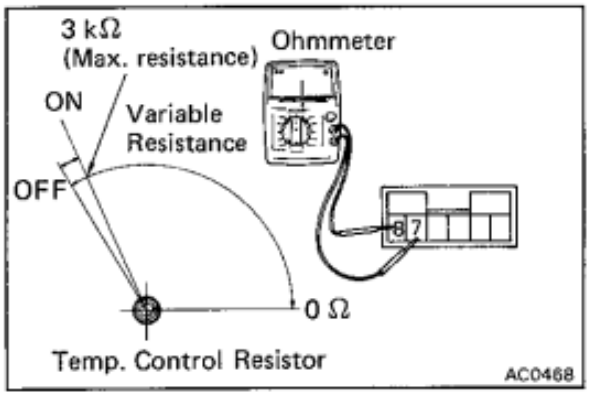

4. **CHECK TEMP. CONTROL RESISTOR FOR RESISTANCE**
   Using an ohmmeter, check for resistance between the terminals while rotating the resistor.
   If an ohmmeter indicates incorrect resistance, replace the resistor.
5. **CONNECT TEMP. CONTROL RESISTOR CONNECTOR**
6. **INSTALL CENTER CLUSTER**
7. **CONNECT NEGATIVE CABLE TO BATTERY**

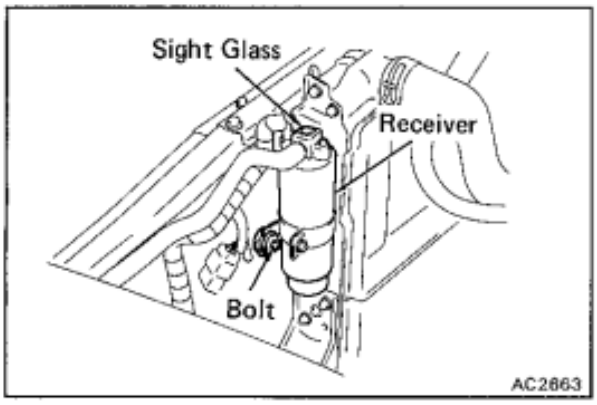

EXPANSION VALVES

Front A/C Expansion Valve

ON-VEHICLE INSPECTION

1. **INSPECT REFRIGERANT VOLUME**
   (See page AC-18)

2. **INSTALL MANIFOLD GAUGE SET**

3. **TURN FRONT A/C SWITCH ON AND BLOWER SWITCH TO HI POSITION**

4. **RUN ENGINE AT APPROX. 2,000 RPM FOR AT LEAST FIVE MINUTES**

5. **INSPECT EXPANSION VALVE**

   If the expansion valve is clogged, the low pressure reading is normal and only the front A/C is not cooling, check for the malfunction of the expansion valve.

REMOVAL OF EXPANSION VALVE

See Disassembly of Front Cooling Unit on page AC-40

INSTALLATION OF EXPANSION VALVE

See Assembly of Front Cooling Unit on page AC-41

Rear Cooler Expansion Valve

ON-VEHICLE INSPECTION

Turn the rear cooler switch ON and rear blower switch to the front A/C expansion valve.

HINT: If the low pressure reading is normal and cool air is only failing to come out of the rear cooler, check for a malfunction of the expansion valve.

REMOVAL OF EXPANSION VALVE

See disassembly of Rear Cooling Unit on page AC-43

INSTALLATION OF EXPANSION VALVE

See Assembly of Rear Cooling Unit on page AC-44

A/C CONTROL ASSEMBLY

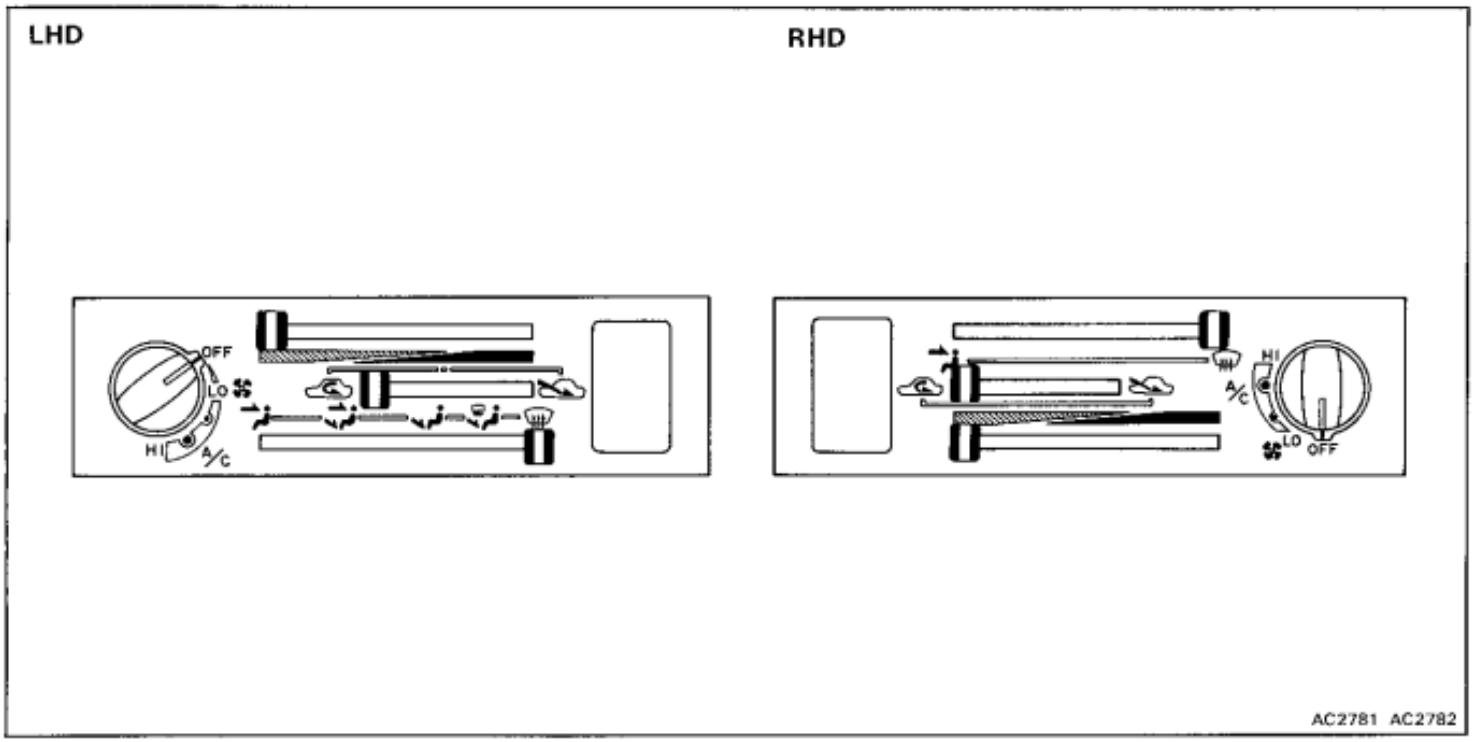

AC2781 AC2782

Blower Switch

INSPECTION OF SWITCH

INSPECT SWITCH CONTINUITY

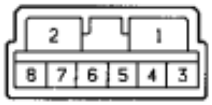

O-8-2

	Terminal / Switch position	1	2	3	4	5	6	7	8
Blower Switch	OFF		○						
	I		○	○	○				
	II		○	○		○			
	III		○	○			○		
	IV (HI)	○	○	○					
A/C Switch	OFF								
	ON							○	○

If continuity is not as specified, replace the switch.

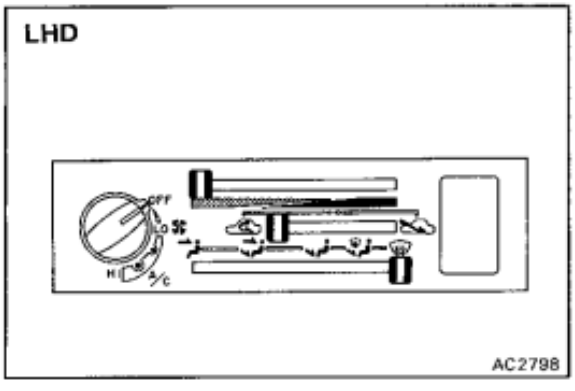

AC2798

A/C Control Levers

INSPECTION OF A/C CONTROL LEVERS

INSPECT LEVERS OPERATION

Move the control levers left and right and check for stiffness and binding through the full range of levers.

If operation is not as specified, replace the A/C control assembly.

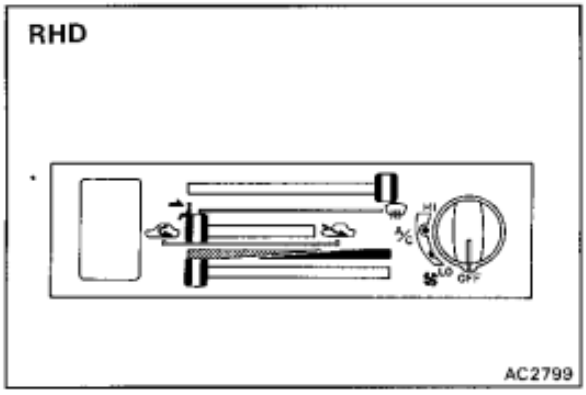

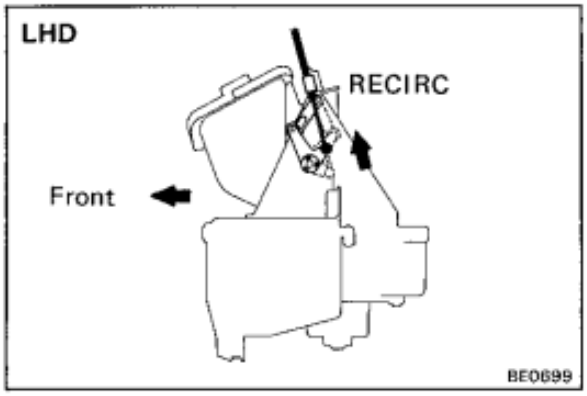

ADJUSTMENT OF CONTROL CABLES

1 ADJUST AIR INLET DAMPER CONTROL CABLE

Set the air inlet damper and the air inlet control lever to "RECIRC", then install the control cable and lock the clamp.

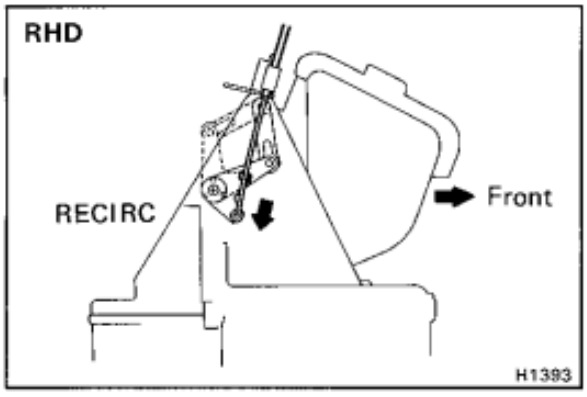

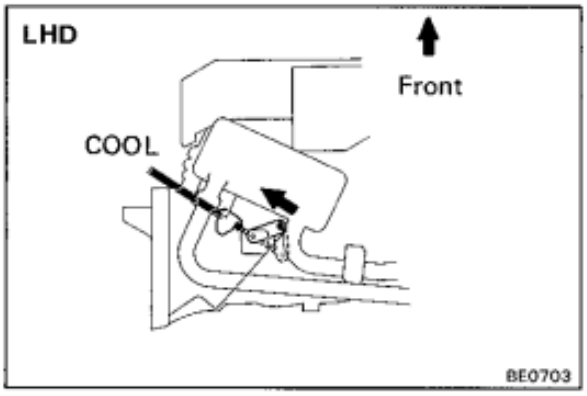

2 ADJUST AIR MIX DAMPER CONTROL CABLE

Set the air mix damper and the temperature control lever to "COOL", then install the control cable and lock the clamp.

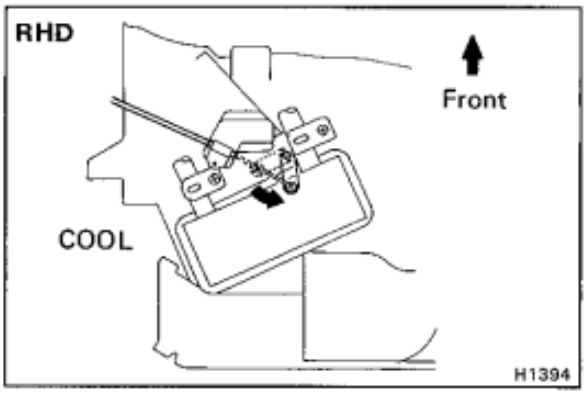

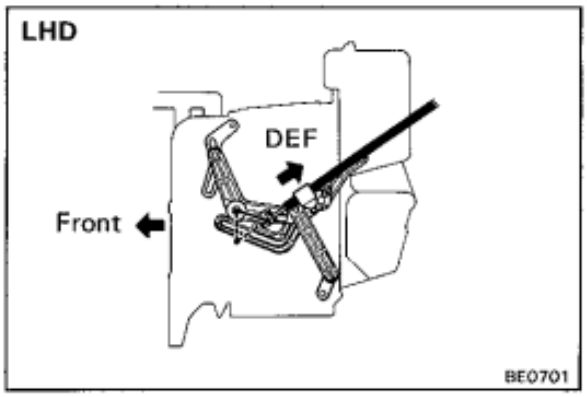

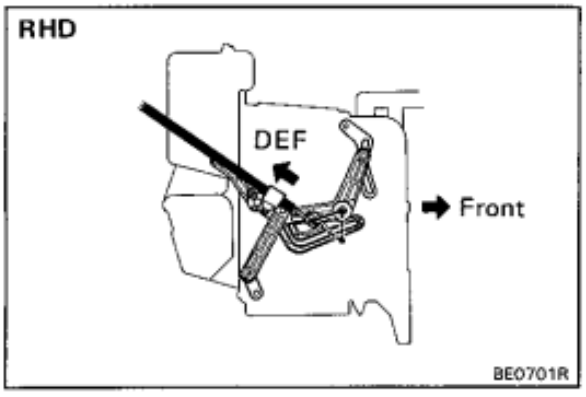

3 ADJUST MODE DAMPER CONTROL CABLE

Set the mode damper and the mode control lever to "DEF", then install the control cable and lock the clamp.

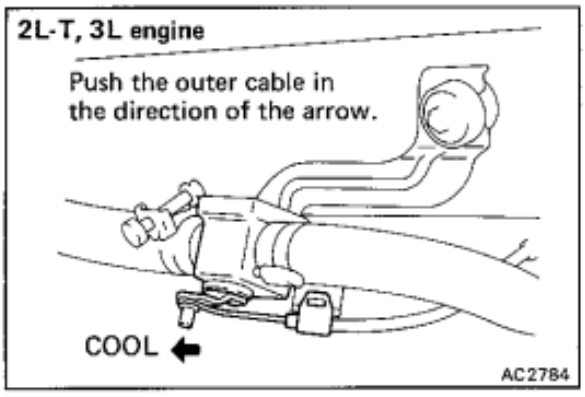

4 ADJUST WATER VALVE CONTROL CABLE

Set the water valve and the temperature control lever to "COOL", then install the control cable and lock the clamp.

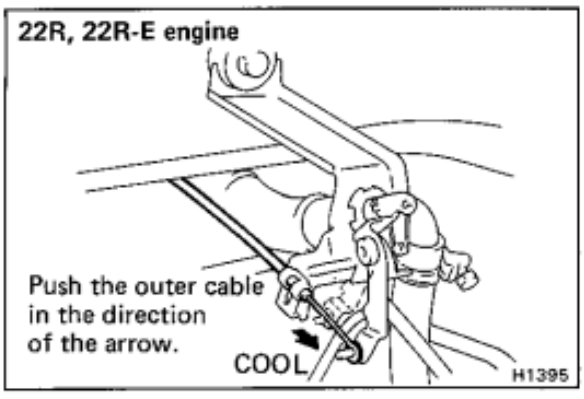

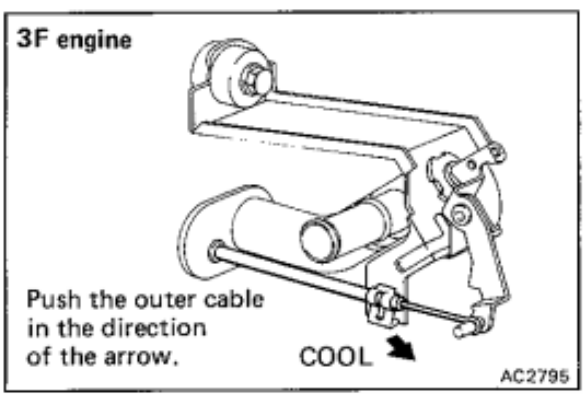

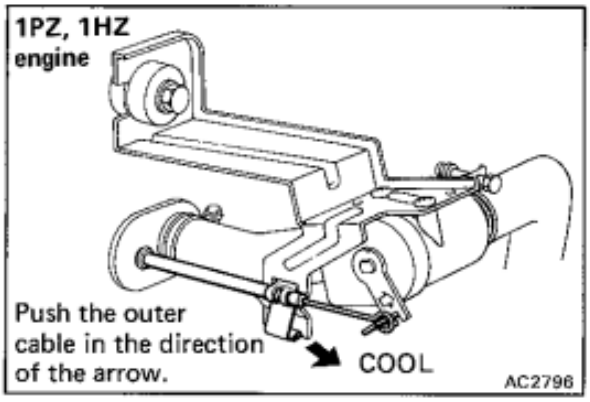
1PZ, 1HZ
engine
Push the outer
cable in the direction
of the arrow.
COOL
AC2796

PRESSURE SWITCH

(See page AC-39)

INSPECTION OF PRESSURE SWITCH

1. **CHECK REFRIGERANT PRESSURE**

   (a) Connect the hoses of the manifold gauge set to the compressor service valves and observe the gauge reading.

   (b) The gauge reading must be more than 2.1 kg/cm^2 (30 psi, 206 kPa) when the ambient temperature is higher than 0°C (32°F).

   If the pressure is less than 2.1 kg/cm^2 (30 psi, 206 kPa), charge the refrigerant.

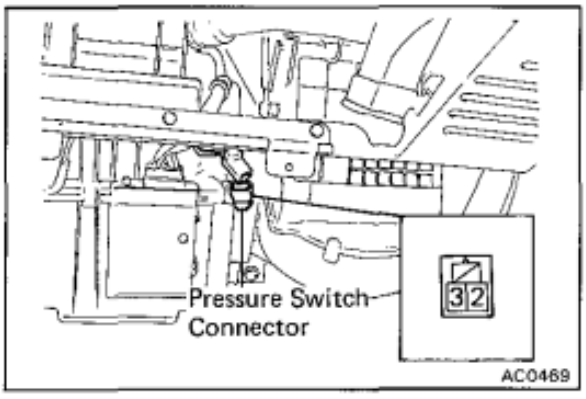

2. **CHECK PRESSURE SWITCH**

   (a) Remove the glove box.

   (b) Disconnect the lead wires of the A/C harness.

   (c) Using an ohmmeter, check the continuity between the two terminals of the pressure switch.

   The ohmmeter must indicate zero ohms.

   If there is no continuity, replace the pressure switch.

   (See page AC-39)

3. **REINSTALL REMOVED PARTS IN REVERSE ORDER**

REFRIGERANT LINES

ON-VEHICLE INSPECTION

1. **INSPECT HOSES AND TUBES FOR LEAKAGE**

   Use a gas leak tester. Replace, if necessary.

2. **CHECK THAT HOSE AND TUBE CLAMPS ARE NOT LOOSE**

   Tighten or replace, as necessary.

REPLACEMENT OF REFRIGERANT LINES

(See page AC-4, 5)

1. **DISCHARGE REFRIGERATION SYSTEM**
   (See page AC-19)

2. **REPLACE FAULTY TUBE OR HOSE**

   NOTE: Cap the open fittings immediately to keep moisture out of the system.

   Torque specification for O-ring fittings

Fitting size	Torque
0.31 in. tube for liquid line	135 kg-cm (10 ft-lb, 13 N·m)
0.50 in. tube for discharge line	225 kg-cm (16 ft-lb, 22 N·m)
0.62 in. tube for suction line	325 kg-cm (24 ft-lb, 32 N·m)

3. **EVACUATE, CHARGE AND TEST REFRIGERATION SYSTEM** **(See page AC-19)**

BLOWER SWITCHES

Front Heater Blower Switch

INSPECTION OF BLOWER SWITCH

INSPECT SWITCH CONTINUITY

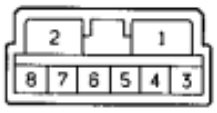

0-8-2

Terminal / Switch position	1	2	3	4	5	6
OFF						
I		○	○	○		
II		○	○		○	
III		○	○			○
IV (HI)	○	○	○			

If continuity is not as specified, replace the switch.

Rear Heater Blower Switch

INSPECTION OF BLOWER SWITCH

INSPECT SWITCH CONTINUITY

H-4-2

Terminal / Switch position	1	2	3	4
HI	○	○		○
OFF				
LO		○	○	○

If continuity is not as specified, replace the switch.

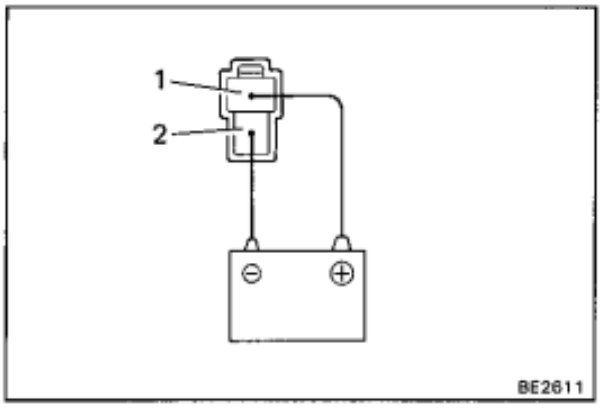

BLOWER MOTORS

Front Blower Motor

INSPECTION OF FRONT BLOWER MOTOR

INSPECT BLOWER MOTOR

Connect the positive (+) lead from the battery to terminal 1 and the negative (—) lead to terminal 2, then check that the motor operation is smooth.

If operation is not as specified, replace the motor.

Rear Blower Motor

INSPECTION OF REAR BLOWER MOTOR

INSPECT BLOWER MOTOR

Check the motor the same way as for the front blower motor.

BLOWER RESISTORS

Front Blower Resistor

INSPECTION OF FRONT BLOWER RESISTOR

INSPECT BLOWER RESISTOR CONTINUITY

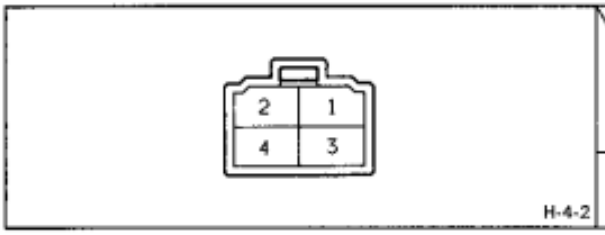

Terminal / Condition	1	2	4	3
Constant	○—/\/\—○—/\/\—○—/\/\—○			

If continuity is not as specified, replace the blower resistor.

Rear Blower Resistor

INSPECTION OF REAR BLOWER RESISTOR

INSPECT BLOWER RESISTOR CONTINUITY

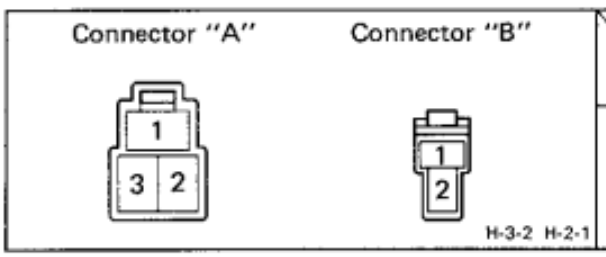

Terminal	Connector "A"			Connector "B"	
Condition	1	2	3	1	2
Constant	○—○	○—/\/\—○	○—○	○—○	

If continuity is not as specified, replace the blower resistor.

HEATER RELAYS

Front Heater Relay

INSPECTION OF RELAY

INSPECT RELAY CONTINUITY

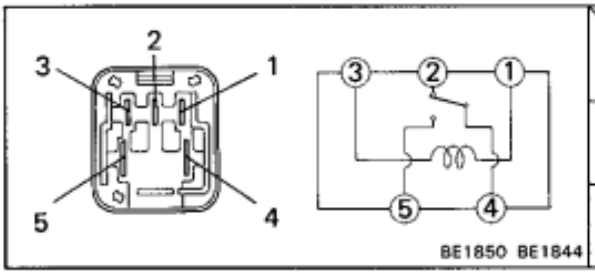

Terminal / Condition	1	2	3	4	5
Constant	○	○	○	○	
Apply battery boltage to terminals 1 and 3.				○	○

If continuity is not as specified, replace the relay.

Rear Heater Relay

INSPECTION OF RELAY

INSPECT RELAY CONTINUITY

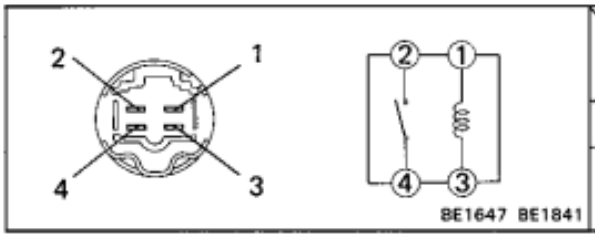

Terminal / Condition	1	2	3	4
Constant	○	○	○	
Apply battery voltage to terminals 1 and 3.		○		○

If continuity is not as specified, replace the relay.

VACUUM SWITCHING VALVE (VSV)

(See page AC-4)

INSPECTION OF VSV

1. **DISCONNECT VACUUM HOSES AND CONNECTOR FROM VSV**

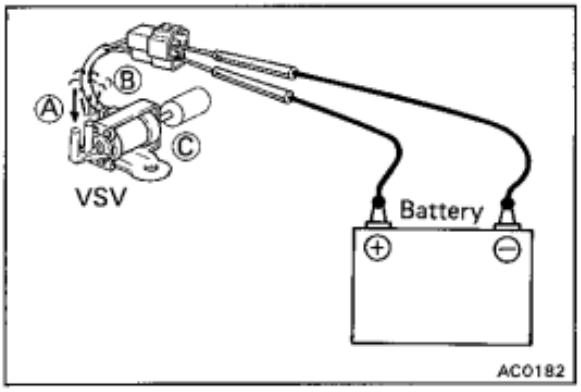

2. **CHECK VACUUM CIRCUIT CONTINUITY IN VSV BY BLOWING AIR INTO PIPE**

   (a) Connect the VSV terminals to the battery terminals as shown.

   (b) Blow into pipe A, and check that air comes out of pipe B.

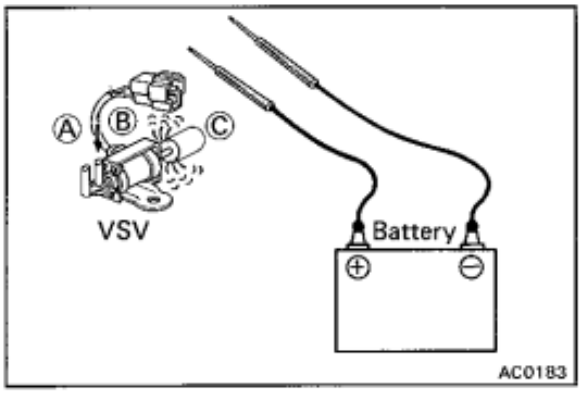

   (c) Disconnect the battery.

   (c) Blow into pipe ''B'' and check that air comes out of filter ''C'' — not out of pipe ''A''.

   If a problem is found, replace the VSV.

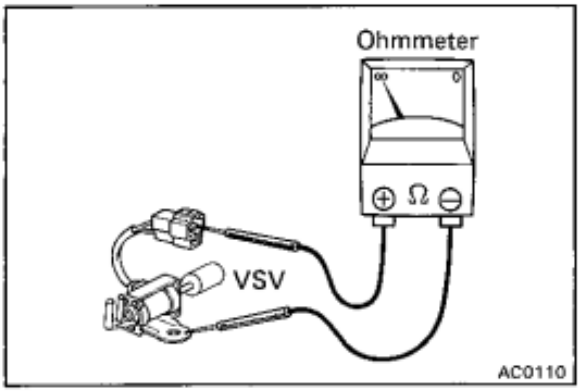

3. **CHECK FOR SHORT CIRCUIT**

   Using an ohmmeter, check that there is no continuity between each terminal and the VSV body.

   If a short circuit is found, repair or replace the VSV.

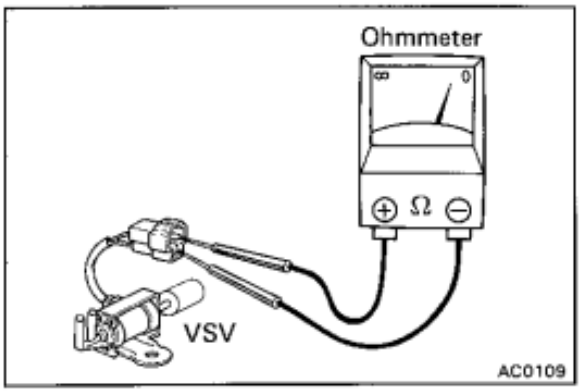

4. **CHECK FOR OPEN CIRCUIT**

   Using an ohmmeter, measure the resistance between two terminals of the VSV.

   Specified resistance: 37 — 44 Ω at 20°C (68°F)

   If the resistance is not within specification, replace the VSV.

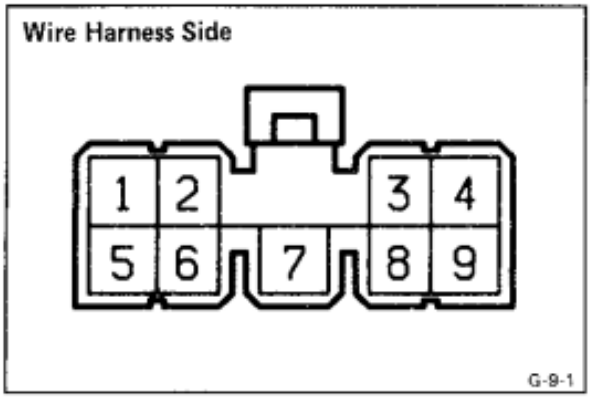

AIR CONDITIONER AMPLIFIER

Inspection of Amplifier

INSPECT AMPLIFIER CIRCUIT

Disconnect the amplifier and inspect the connector on the wire harness side as shown in the chart below.

Test conditions:

(1) Ignition: ON

(2) Temperature control lever: MAX. COOL

(3) Blower switch: HI

For 22R, 3F engines

Check for	Tester connection	Condition	Specified value
Voltage	2 — 6	Turn A/C switch on	No voltage
		Turn A/C switch off	Battery voltage
	3 — 6	Turn A/C switch on	No voltage
		Turn A/C switch off	Battery voltage
	5 — 6	Start engine	Approx. 10 to 14 V
		Stop engine	No voltage
Resistance	3 — 4	Constant	Approx. 40 Ω at 25°C (77°F)
	6 — 7	Constant	Approx. 3.8 Ω
	8 — 9	Max. cool	Apporx. 0 Ω
		Min. cool	Apporx. 3 KΩ
	6 — 9	Constant	Approx. 1.5 KΩ at 25°C (77°F)

For 2L-T, 3L, 1PZ engines

Check for	Tester connection	Condition	Specified value
Voltage	3 — 6	Turn ignition switch on	Battery voltage
		Turn ignition switch off	No voltage
	2 — 6	Turn A/C switch on	Battery voltage
		Turn A/C switch off	No voltage
Resistance	8 — 9	Max. cool	Approx. 0 Ω
		Min. cool	Approx. 3 KΩ
	6 — 9	Constant	Approx. 1.5 KΩ
	6 — 7	Constant	Approx. 3.5 Ω
Continuity	4 — 6	Water temp. switch off [Approx. 110°C (230°F)]	No continuity
		Water temp. switch on [Approx. 110°C (230°F)]	Continuity

STANDARD BOLT TORQUE SPECIFICATIONS

HOW TO DETERMINE BOLT STRENGTH

	Mark	Class		Mark	Class
Hexagon head bolt		4T 5T 6T 7T 8T 9T 10T 11T	Stud bolt	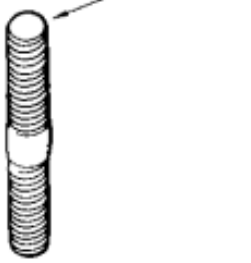	4T
	No mark	4T		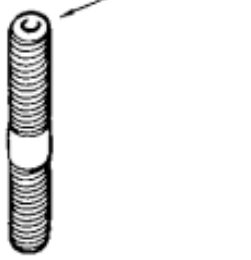	6T
Hexagon flange bolt w/ washer hexagon bolt	No mark	4T			
Hexagon head bolt	Two protruding lines	5T			
Hexagon flange bolt w/ washer hexagon bolt	Two protruding lines	6T	Welded bolt	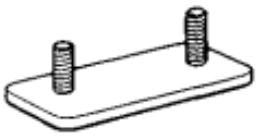	4T
Hexagon head bolt	Three protruding lines	7T			
Hexagon head bolt	Four protruding lines	8T			

SPECIFIED TORQUE FOR STANDARD BOLTS

Class	Diameter mm	Pitch mm	Specified torque					
			Hexagon head bolt			Hexagon flange bolt		
			kg-cm	ft-lb	N·m	kg-cm	ft-lb	N·m
4T	6	1	55	48 in.-lb	5	60	52 in.-lb	6
	8	1.25	130	9	12.5	145	10	14
	10	1.25	260	19	26	290	21	29
	12	1.25	480	35	47	540	39	53
	14	1.5	760	55	74	850	61	84
	16	1.5	1,150	83	115	—	—	—
5T	6	1	65	56 in.-lb	6.5	75	65 in.-lb	7.5
	8	1.25	160	12	15.5	175	13	17.5
	10	1.25	330	24	32	360	26	36
	12	1.25	600	43	59	670	48	65
	14	1.5	930	67	91	1,050	76	100
	16	1.5	1,400	101	140	—	—	—
6T	6	1	80	69 in.-lb	8	90	78 in.-lb	9
	8	1.25	195	14	19	210	15	21
	10	1.25	400	29	39	440	32	44
	12	1.25	730	53	71	810	59	80
	14	1.5	1,100	80	110	1,250	90	125
	16	1.5	1,750	127	170	—	—	—
7T	6	1	110	8	10.5	120	9	12
	8	1.25	260	19	25	290	21	28
	10	1.25	530	38	52	590	43	58
	12	1.25	970	70	95	1,050	76	105
	14	1.5	1,500	108	145	1,700	123	165
	16	1.5	2,300	166	230	—	—	—
8T	8	1.25	300	22	29	330	24	33
	10	1.25	620	45	61	690	50	68
	12	1.25	1,100	80	110	1,250	90	120
9T	8	1.25	340	25	34	380	27	37
	10	1.25	710	51	70	790	57	78
	12	1.25	1,300	94	125	1,450	105	140
10T	8	1.25	390	28	38	430	31	42
	10	1.25	800	58	78	890	64	88
	12	1.25	1,450	105	140	1,600	116	155
11T	8	1.25	430	31	42	480	35	47
	10	1.25	890	64	87	990	72	97
	12	1.25	1,600	116	155	1,800	130	175

SST (SPECIAL SERVICE TOOLS)

Section / Part Name / Part No. / Illustration			CL	MT	AT	TF	PR	SA Front	SA Rear	BR	SR	BE	BO	Note
	09032-00100	Oil Pan Seal Cutter			●									
	09043-38100	Hexagon 10 mm Wrench									●			
	09201-60011	Valve Guide Bushing Remover & Replacer				●								
	09213-27010	Gear Remover		●										
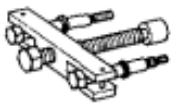	09213-31021	Crankshaft Pulley Puller		●										
	09213-36020	Timing Gear Remover		●										
	09213-60017	Crankshaft Pulley & Gear Puller Set		●										
	(09213-00020)	(Body with Bolt)		●										
	(09213-00030)	(Handle)		●										
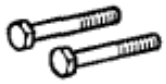	(09213-00060)	(Bolt Set)		●										
	09214-76011	Crankshaft Pulley Replacer						*1 ●	*2 ●					* 1 Drive pinion rear oil seal * 2 Drive pinion front oil seal
	09216-00020	Belt Tension Gauge									●			
	09216-00030	Belt Tension Gauge Cable									●			
	09223-15020	Oil Seal & Bearing Replacer						*1 ●	*2 ●					* 1 Differential side bearing (w/ Differential lock only) * 2 Differential side bearing (8 in. diff. w/ Differential lock only)

SST (SPECIAL SERVICE TOOLS) (Cont'd)

Section / Part Name / Part No. / Illustration			CL	MT	AT	TF	PR	SA Front	SA Rear	BR	SR	BE	BO	Note
	09223-50010	Crankshaft Front Oil Seal Replacer		●										
	09228-22020	Oil Filter Wrench						*●	*●					* Leading arm bushing
	09236-00101	Water Pump Overhaul Tool Set									●			
	(09237-00010)	(Water Pump Bearing Remover & Replacer)									●			
	09301-55022	Clutch Guide Tool	●											
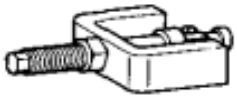	09303-35011	Input Shaft Front Bearing Puller	●											
	09304-30012	Input Shaft Front Bearing Replacer	●											
	09308-00010	Oil Seal Puller						*1 ●	*2 ●		●			* 1 Drive pinion rear bearing outer race and oil storage ring (FJ, PZJ and HZJ series only) * 2 Drive pinion front bearing outer race
	09308-10010	Oil Seal Puller				●		●	●					
	09309-36010	Transmission Rear Bearing Replacer								●				
	09309-36033	Transmission Bearing Replacer		●		●								
	09309-60010	Extension Pipe		●										
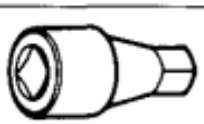	09313-30021	Detent Ball Plug Socket		●				*1 ●	*2 ●					* 1 Straight screw plug (w/ Differential lock only) * 2 Straight screw plug (8 in. diff. w/ Differential lock only)
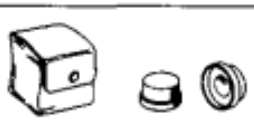	09315-00021	Clutch Release Bearing Remover & Replacer							●					Differential side bearing (9.5 in. diff. 2 pinion and LSD types only)

SST (SPECIAL SERVICE TOOLS) (Cont'd)

Illustration	Part No.	Part Name	CL	MT	AT	TF	PR	SA Front	SA Rear	BR	SR	BE	BO	Note
	09316-60010	Transmission & *Transfer Bearing* Replacer		●		●		●	●					
	(09316-00010)	(Replacer Pipe)		●		●		*1 ●	*2 ●					*1 Drive pinion rear bearing outer race and oil storage ring (FJ, PZJ and HZJ series only) *2 Drive pinion front bearing outer race
	(09316-00020)	(Replacer "A")				●		*1 ●	*2 ●					*1 Drive pinion rear bearing outer race and oil storage ring (FJ, PZJ and HZJ series only) *2 Drive pinion front bearing outer race
	(09316-00030)	(Replacer "B")		●		●								
	(09316-00040)	(Replacer "C")		●		●								
	(09316-00050)	(Replacer "D")						*1 ●	*2 ●					*1 Drive pinion front bearing outer race *2 Drive pinion rear bearing outer race
	(09316-00060)	(Replacer "E")				●								
	(09316-00070)	(Replacer "F")		●		●								
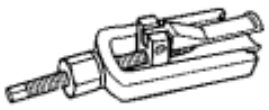	09319-60020	Transfer Output Shaft Needle Roller Bearing Remover				●								
	09325-12010	Transmission Oil Plug		●										
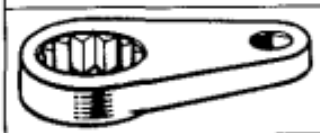	09326-20011	Output Shaft Bearing Lock Nut Wrench		●										
	09330-00021	Companion Flange Holding Tool				●		●	●					
	09332-25010	Universal Joint Bearing Remover & Replacer					●							
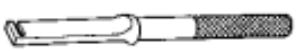	09333-00013	Clutch Diaphragm Spring Aligner	●											

SST (SPECIAL SERVICE TOOLS) (Cont'd)

Section / Part Name / Part No. / Illustration			CL	MT	AT	TF	PR	SA Front	SA Rear	BR	SR	BE	BO	Note
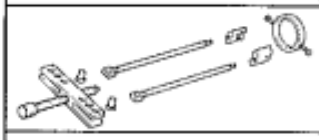	09336-60010	Transmission Gear Remover		●										
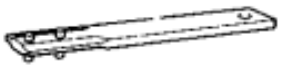	09504-00011	Differential Side Bearing Adjusting Nut Wrench						●	●					
	09504-22011	Differential Side Washer Remover & Replacer							●					
	09506-30012	Differential Drive Pinion Bearing Cone Replacer						●						
	09506-35010	Differential Drive Pinion Rear Bearing Replacer		●					* ●					* 9.5 in. type only
	09509-25011	Rear Axle Bearing Lock Nut Wrench							●					
	09514-35011	Rear Wheel Bearing Puller							●					
	09515-21010	Rear Axle Shaft Bearing Replacer		●										
	09517-36010	Rear Axle Shaft Oil Seal Replacer							●					
	09527-20011	Rear Axle Shaft Bearing Remover									●			
	09550-10012	Replacer Set "B"							●		●			
	(09252-10010)	(No. 1 Replacer Handle)							●					Differential side bearing
	(09552-10010)	(No. 2 Replacer Handle)									●			
	(09557-10010)	(Differential Drive Pinion Front Bearing Replacer)							●					Differential side bearing

SST (SPECIAL SERVICE TOOLS) (Cont'd)

Section / Part Name / Part No. / Illustration			CL	MT	AT	TF	PR	SA		BR	SR	BE	BO	Note
								Front	Rear					
	(09558-10010)	(Rear Axle Shaft Oil Seal Replacer)							* ●		●			* Differential side bearing
	(09559-10010)	(Knuckle Inner Bearing Replacer)									●			
	09550-60010	Differential Side Bearing Replacer							●					
	09554-30011	Differential Oil Seal Replacer						●	●					
	09556-22010	Drive Pinion Front Bearing Remover						* ●	●					* Drive pinion front bearing
	09557-22022	Companion Flange Remover & Replacer						●	●					
	(09557-22050)	(No. 3 Bolt)						●	* ●					* 8 in. diff. type only
	09602-10010	Front Axle Inner Bearing Puller		●										
	09602-35011	Front Axle Inner Bearing Puller		●										
	09605-60010	Steering Knuckle Bearing Cup Replacer						●						
	09606-60020	Steering Knuckle Bearing Cup Remover						●						
	09607-60020	Front Wheel Adjusting Nut Wrench						●						
	09608-10010	Steering Knuckle Oil Seal Replacer								●				
	09608-12010	Front Hub & Drive Pinion Bearing Replacer Set		●										

SST (SPECIAL SERVICE TOOLS) (Cont'd)

Section / Part Name / Part No. / Illustration			CL	MT	AT	TF	PR	SA Front	SA Rear	BR	SR	BE	BO	Note
	(09608-00020)	(Remover & Replacer Handle)		●										
	(09608-00050)	(Drive Pinion Front Bearing Cup Replacer)		●										
	09608-20012	Front Hub & Drive Pinion Bearing Tool Set		●		●			●	●				
	(09608-00030)	(Replacer)		●										
	(09608-00040)	(Replacer)				●				●				
	(09608-03020)	(Handle)		●		●			●	●				
	(09608-03060)	(Replacer)							●					
	09608-30012	Front Hub & Drive Pinion Bearing Tool Set						●		●	●			
	(09608-00060)	(Drive Pinion Front Bearing Cup Replacer)						●						
	(09608-04020)	(Handle)						●						
	(09608-04030)	(Front Hub Inner Bearing Cone Replacer)								●	●			
	(09608-04060)	(Front Hub Outer Bearing Cup Replacer)						●						
	(09608-04100)	(Drive Pinion Front Bearing Cup Replacer)						●						
	(09608-04110)	(Drive Pinion Rear Bearing Cup Replacer)						●						

SST (SPECIAL SERVICE TOOLS) (Cont'd)

Section / Part Name / Part No. / Illustration			CL	MT	AT	TF	PR	SA Front	SA Rear	BR	SR	BE	BO	Note
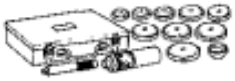	09608-35014	Axle Hub & Drive Pinion Bearing Tool Set		●				●	●					
	(09608-06020)	(Handle)		●				●	●*					* 9.5 in. diff. type only
	(09608-06090)	(Front Hub Outer & Steering Worm Bearing Replacer)		●										
	(09608-06110)	(Front Hub Inner & Drive Pinion Front Bearing Cup Replacer)							●					9.5 in. diff. type only
	(09608-06150)	(Rear Hub Outer Bearing Cup Replacer)						●						
	(09608-06180)	(Drive Pinion Rear Bearing Cup Replacer)							●					9.5 in. diff. type only
	(09608-06200)	(Rear Axle Bearing Replacer)						●	●					
	(09608-06210)	(Rear Axle Bearing Replacer)						●	●					
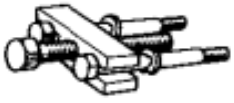	09609-20011	Steering Wheel *Puller*									●			
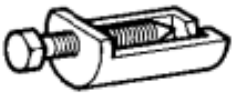	09610-20012	Pitman Arm Puller									●			Heavy-duty
	09611-12010	Tie Rod End Puller									●			Light-duty
	09611-22012	Tie Rod End Puller						*●			●			* RJ and LJ series only
	09612-22011	Tilt Handle Bearing Replacer									●			Tilt steering column
	09612-30012	Steering Worm Bearing Puller	●											

SST (SPECIAL SERVICE TOOLS) (Cont'd)

Section / Part Name / Part No. / Illustration			CL	MT	AT	TF	PR	SA		BR	SR	BE	BO	Note
								Front	Rear					
	09612-65014	Steering Worm Bearing Puller						●			●			
	(09612-01020)	(Claw "B")						●						
	(09612-01030)	(Claw "C")									●			Manual steering
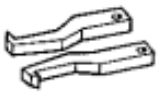	(09612-01040)	(Claw "D")									●			Manual steering
	(09612-01050)	(Hanger Pin with Nut)							●					
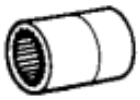	09616-00010	Steering Worm Bearing Adjusting Socket									●			
	09616-30020	Steering Worm Bearing Adjusting Screw Wrench						*1 ●	*1 ●		*2 ●			*1 Differential side bearing adjusting nut (8 in. type w/ Differential lock only) *2 Manual steering
	09617-60010	Worm Bearing Adjusting Screw Lock Nut Wrench									●			Manual steering
	09618-60010	Front Axle & Drive Shaft Bearing Replacer						●						
	09620-30010	Steering Gear Box Replacer Set									●			
	(09623-30010)	(Steering Worm Bearing & Oil Seal Replacer)									●			Tilt steering column
	(09624-30010)	(Steering Sector Shaft Oil Seal Replacer)									●			Tilt steering column
	(09631-00020)	(Handle)									●			Tilt steering column
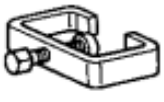	09628-12022	Ball Joint Puller									●			Heavy-duty

SST (SPECIAL SERVICE TOOLS) (Cont'd)

Section / Part Name / Part No. / Illustration			CL	MT	AT	TF	PR	SA Front	SA Rear	BR	SR	BE	BO	Note
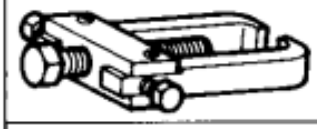	09628-62011	Ball Joint Puller									●			
	09630-00012	Power Steering Gear Housing Overhaul Tool Set	●								●			
	(09631-00020)	(Handle)									●			
	(09631-00050)	(No. 3 Wrench)									●			
	(09631-00060)	(Oil Seal Replacer)	●											
	(09631-00070)	(Bearing Remover & Replacer)									●			
	(09631-00090)	(Replacer)									●			
	(09631-00120)	(Teflon Ring Former)									●			
	(09631-00140)	(Overhaul Stand)									●			
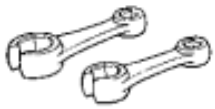	09631-22020	Power Steering Hose Nut 14 x 17 mm Wrench Set									●			
	09632-36010	Steering Vane Pump Bearing Replacer									●			
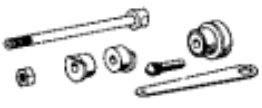	09634-60013	Steering Knuckle Centering Gauge						●						
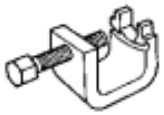	09650-17011	Hub Bolt Remover							●					
	09703-30010	Brake Shoe Return Spring Tool								●				

SST (SPECIAL SERVICE TOOLS) (Cont'd)

Section / Part Name / Part No. / Illustration			CL	MT	AT	TF	PR	SA		BR	SR	BE	BO	Note
								Front	Rear					
	09709-29017	LSPV Gauge Set								●				
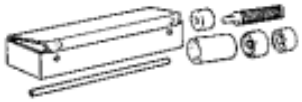	09710-22041	Rear Suspension Bushing Tool Set						●	●					
	(09710-02020)	(Handle)						●	●					
	(09710-02050)	(Base)						●	●					
	(09710-02070)	(Bushing Remover & Replacer)						●	●					
	09710-30030	Rear Suspension Bushing Tool Set						●	●					
	(09710-03180)	(Replacer)						●	●					
	09717-20010	Brake Shoe Return Spring Remover								●				
	09718-00010	Shoe Hold Down Spring Driver								●				
	09718-20010	Brake Shoe Return Spring Replacer								●				
	09726-35010	Front Lower Arm Bushing Remover & Replacer							●					8 in. diff. LSD type only
	09726-40010	Lower Control Shaft Bearing Replacer						* ●	* ●					* Companion flange
	09727-30020	Coil Spring Compressor						●	●					
	09736-27010	Booster Diaphragm Remover & Replacer								●				

SST (SPECIAL SERVICE TOOLS) (Cont'd)

Section / Part Name / Part No. / Illustration			CL	MT	AT	TF	PR	SA		BR	SR	BE	BO	Note
								Front	Rear					
	09737-00010	Brake Booster Push Rod Gauge	●							●				
	09751-36011	Brake Tube Union Nut 10 x 12 mm Wrench	●					●		●				
	09753-00013	Brake Booster Overhaul Tool Set	●							●				
	09753-30011	Reaction Disc Hub Holding Tool								●				
	09753-30020	Oil Seal Replacer	●							●				
	09753-40010	Base Plate								●				
	09806-30010	Windshield Moulding Remover											●	
	09812-00010	Door Hinge Set Bolt Wrench											●	
	09817-16011	Back-up Light Switch Tool		●										
	09910-00015	Puller Set		●										
	(09911-00011)	(Puller Clamp)		●										
	(09912-00010)	(Puller Slide Hammer)		●										
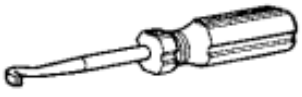	09921-00010	Spring Tension Tool				●								
	09923-00010	Hexagon 14 mm Wrench		●										

SST (SPECIAL SERVICE TOOLS) (Cont'd)

Section / Part Name / Part No. / Illustration			CL	MT	AT	TF	PR	SA Front	SA Rear	BR	SR	BE	BO	Note
	09950-00020	Bearing Remover		●				* ●	* ●					* Companion flange
	09950-20017	Universal Puller		●		●		●	●		●			
	09992-00094	Automatic Transmission Oil Pressure Gauge Set			●									
	09992-00241	Turbocharger Pressure Gauge										●		Turbo pressure switch

NOTE: For reference to SSTs for the Air Conditioning System see page AC-13.

SSM (SPECIAL SERVICE MATERIALS)

Part Name	Part No.	Sec.	Use etc.
Seal packing or equivalent	08826-00080	BR	Brake booster
Seal packing 1281, Three bond 1281 or equivalent	08826-00090	MT	(G40 and G52) Transmission case × Intermediate plate Transfer adaptor × Intermediate plate (R141F, R150F and R151F) Transmission case × Intermediate plate Front bearing retainer × Transmission case Transfer adaptor × Intermediate plate
		AT	Oil pan × Transmission case
		SA	(8 in. diff. type) Differential lock shaft retainer (9.5 in. diff. type) Differential lock actuator Differential lock cover
Adhesive 1324, Three bond 1324 or equivalent	08833-00070	MT	(H41 and H55F) Tight plug
		TF	Oil receiver set bolt Transfer front case set bolt Straight screw plug Rear bearing retainer set bolt No.2 case cover set bolt Power take-off cover set bolt
		SA	(9.5 in. diff. type) Differential lock cover set bolt Differential lock shift fork set bolt
		SR	Steering lock set bolt
Adhesive 1344, Three bond 1344, Loctite 242 or equivalent	08833-00080	MT	(G40 and G52) Plug Front bearing retainer set bolt Clutch housing set bolt (Two bolts) (H41 and H55F) Plug Front bearing retainer set bolt (R141F, R150F and R151F) Screw plug Front bearing retainer set bolt Shift lever housing set bolt Shift lever retainer set bolt
		SA	Power locking hub cover assembly mounting bolt (8 in. diff. type) Differential lock shaft retainer set bolt Straight screw plug
		SR	Manual gear housing worm bearing adjusting screw and lock nut Sector shaft end cover
Castle YM102 grease No.2	08887-02007	SA	Power locking hub body subassembly Power locking hub cover subassembly Power locking hub slip ring
Dupont paste No.4817	–	BE	Rear window defogger wire
Three cement black	08833-00030	BO	Windshield
Butyl tape set	08850-00065	BO	Side window glass

NOTE: For reference to SSMs for the Air Conditioning System see page AC-13.

SSM (SPECIAL SERVICE MATERIALS)

Part Name	Part No.	Sec.	Use etc.
Seal packing 1281, Three bond 1281 or equivalent	08826-00090	MT	Transmission case × Intermediate plate Transmission case × Front bearing retainer Transfer adaptor × Intermediate plate Transmission case × Shift lever control retainer
		TF	Front case × Rear case Rear case × Case cover Rear case × Rear extension housing Front case × Front extension housing Front case × Motor actuator
Adhesive 1344, Three bond 1344, Loctite 242 or equivalent	08833-00080	MT	Front bearing retainer set bolts Oil pump body set bolts Shift lever control retainer set bolts
		TF	Straight screw plug Rear case set bolts (two bolts) Case cover set bolts

A INTRODUCTION

This manual consists of the following 6 sections:

No.	Section	Description
A	INDEX	Index of the contents of this manual.
	INTRODUCTION	Brief explanation of each section.
B	HOW TO USE THIS MANUAL	Instructions on how to use this manual.
C	ABBREVIATIONS	Defines the abbreviations used in this manual.
D	RELAY LOCATIONS	Shows position of the Electronic Control Unit, Relays, Relay Block, etc. This section is closely related to the system circuit.
E	ELECTRICAL WIRE ROUTING	Describes position of the Parts Connectors, Ground points, etc. This section is closely related to the system circuit.
F	INDEX	Index of the system circuits.
	ELECTRICAL WIRING DIAGRAM	SYSTEM CIRCUITS Electrical circuits of each system are shown from the power supply to the ground points, and the connection methods between related systems are shown. SYSTEM CIRCUIT CONNECTORS All connector shapes, terminals and colors included in the wiring diagrams are shown here, grouped according to the respective wiring diagrams. (See the illustration below.)

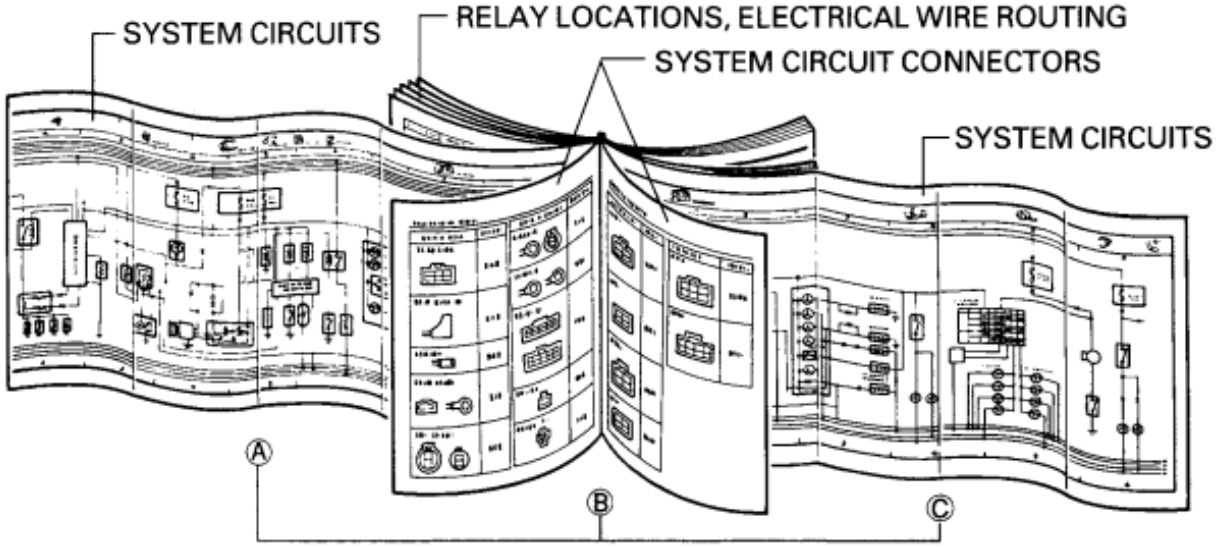

For details of connectors in system circuits Ⓐ and Ⓒ, refer to the system circuit connectors in Ⓑ.

F ELECTRICAL WIRING DIAGRAM (SYSTEM CIRCUITS) 1

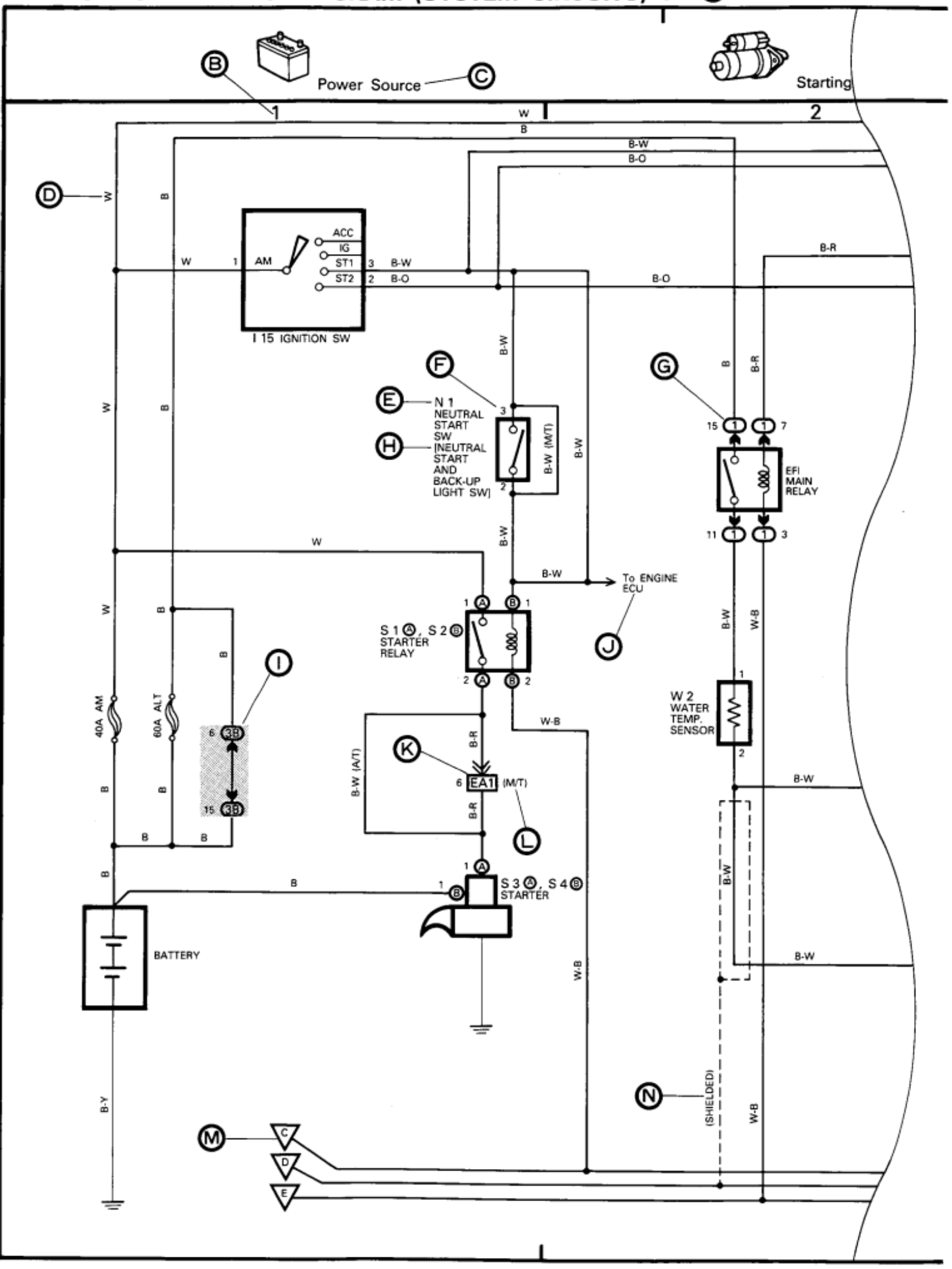

Ⓐ: Number of the system circuit

Ⓑ: Number of the section of the system circuit

Ⓒ: System Title

Ⓓ: Indicates the wiring color.

Wire colors are indicated by an alphabetical code.

B	= Black	L	= Blue	R	= Red
BR	= Brown	LG	= Light Green	V	= Violet
G	= Green	O	= Orange	W	= White
GR	= Gray	P	= Pink	Y	= Yellow

The first letter indicates the basic wire color and the second letter indicates the color of the stripe.

Example: L – Y

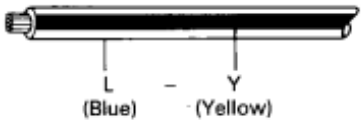

Ⓔ: Represents a part.
The position of the parts is the same as shown in the system circuits and wiring routing.

Ⓕ: Indicates the pin number of the connector. The numbering system is different for female and male connectors.

Example: Numbered in order from upper left to lower right / Numbered in order from upper right to lower left

Ⓖ: Indicates a Relay Block. No shading is used and only the Relay Block No. is shown to distinguish it from the J/B.

Example: ① Indicates Relay Block No. 1.

Ⓗ: When 2 parts both use one connector in common, the parts connector name used in the wire routing section is shown in square brackets [ ].

Ⓘ: Junction Block (The number in the circle is the J/B No. and the connector code is shown beside it). Junction Blocks are shaded to clearly separate them from other parts (different junction blocks are shaded differently for further clarification).

Example:

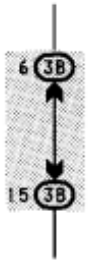

3B indicates that it is inside Junction Block No. 3.

Ⓙ: Indicates related system.

Ⓚ: Indicates the wiring harness and wiring harness connector. The wiring harness with male terminal is shown with arrows (≫). Outside numerals are pin numbers.

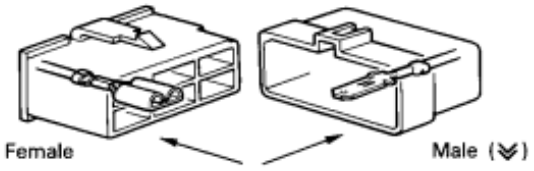

Ⓛ: ( ) is used to indicate different wiring and connector, etc. when the vehicle model, engine type, or specification is different.

Ⓜ: Indicates a ground point.

Ⓝ: Indicates a shielded cable.

Shown on this page are the connectors (wire harness side) for parts shown in the system circuits. An explanation is given for each item on the page.

- Part code No. and Part name
  The part code No. and part name are given as in the system circuit, arranged in alphabetical order.
  The position of the parts is the same as shown in the system circuits and wiring routing.

- The location indicated is the location of the applicable part within the system circuit.
  (The left number is the number of the page and the right number is the number of the section on the system circuit.)

SYSTEM CIRCUIT CONNECTORS

Part Code	Parts & Connector Type	Location
I 15	Ignition SW Black 	84-1
N 1	Neutral Start SW [Neutral Start and Back-Up Light] Black 	84-1
O 1	O/D Solenoid 	84-4
S 3	Starter 	84-1

Part Code	Parts & Connector Type	Location
S 1	Ⓐ Starter Relay 	84-1
S 2	Ⓑ Starter Relay 	84-1
W 2	Water Temp. Sensor 	84-2

- Indicates the pin number of the connector.

- Connector color
  (connectors with the color not indicated are milky white in color.)

- These indicate that the part has more than one connector.

ABBREVIATIONS

The following abbreviations are used in this manual.

A/C	=	Air Conditioner
ADD	=	Automatic Disconnecting Differential
COMB.	=	Combination
DIFF.	=	Differential
ECU	=	Electronic Control Unit
EFI	=	Electronic Fuel Injection
EGR	=	Exhaust Gas Recirculation
Ex.	=	Except
FL	=	Fusible Link
LH	=	Left-Hand
LHD	=	Left-Hand Drive
M/T	=	Manual Transmission
R/B	=	Relay Block
RH	=	Right-Hand
RHD	=	Right-Hand Drive
SW	=	Switch
TEMP.	=	Temperature
VSV	=	Vacuum Switching Valve
w/	=	With
w/o	=	Without
2WD	=	Two Wheel Drive Vehicles
4WD	=	Four Wheel Drive Vehicles

* The titles given inside the components are the names of the terminals (terminal codes) and are not treated as being abbreviations.

D RELAY LOCATIONS

[Engine Compartment] (Heavy-Duty)

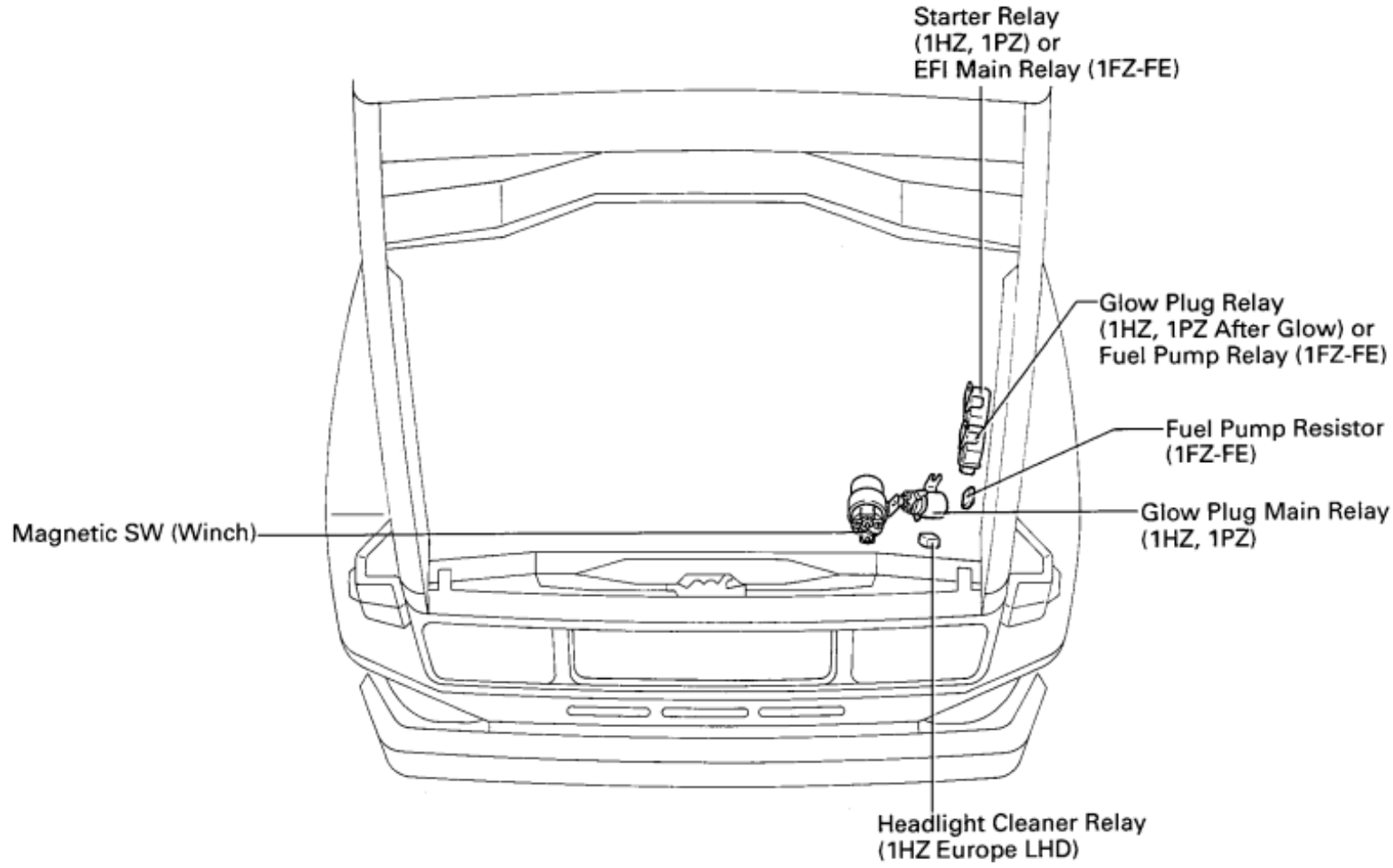

[Engine Compartment] (Light-Duty)

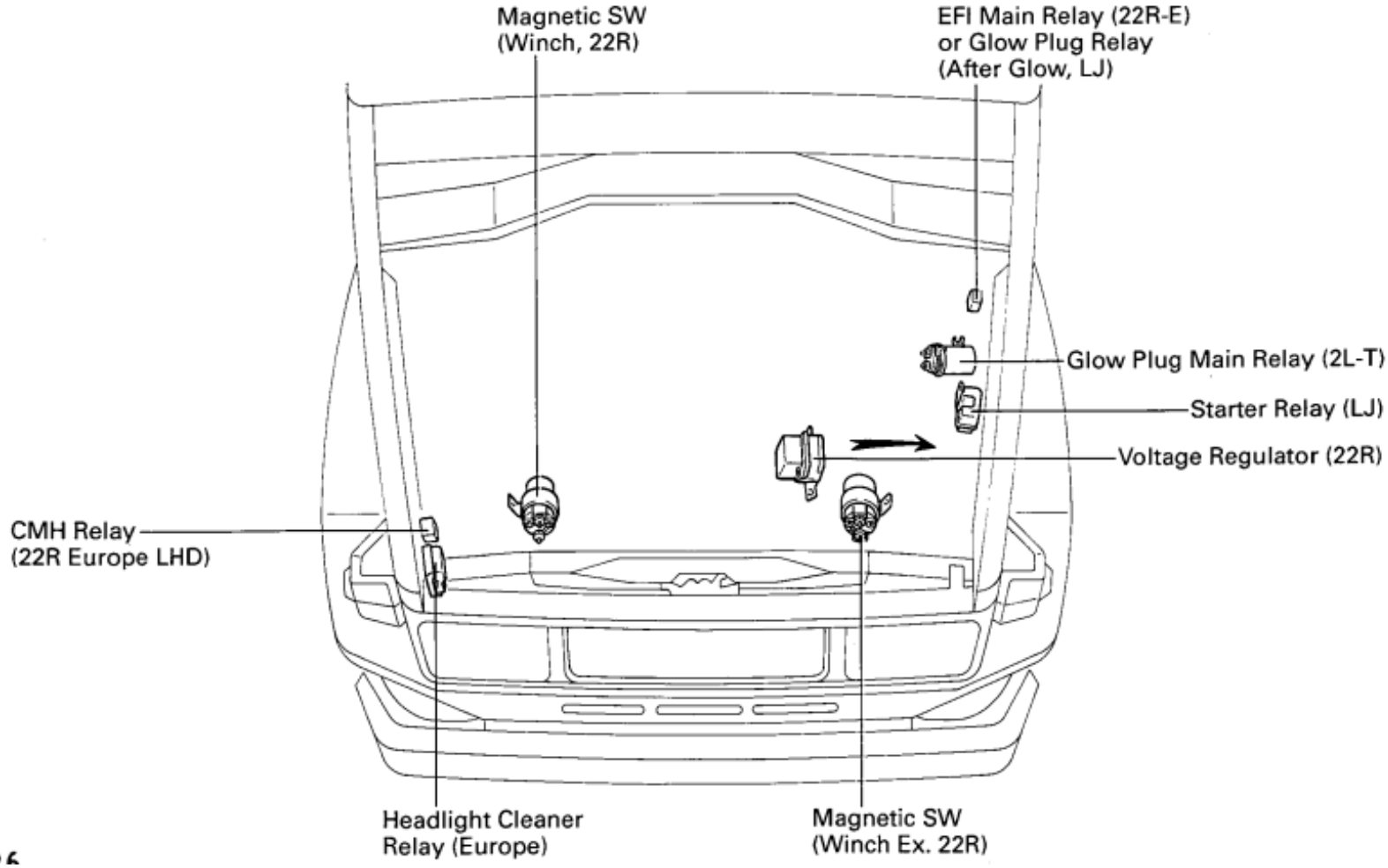

[Instrument Panel LHD] (Heavy-Duty)

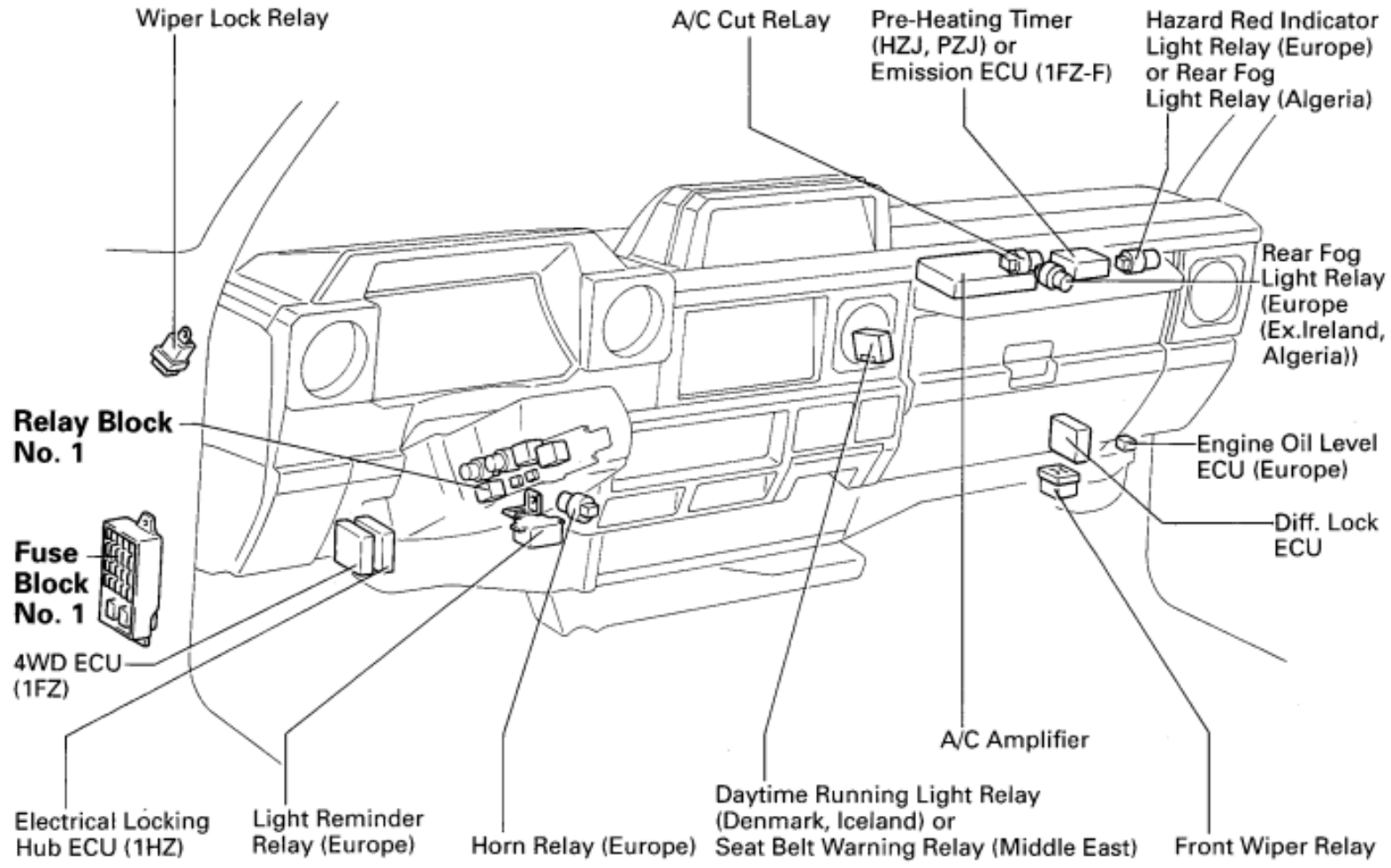

[Instrument Panel RHD] (Heavy-Duty)

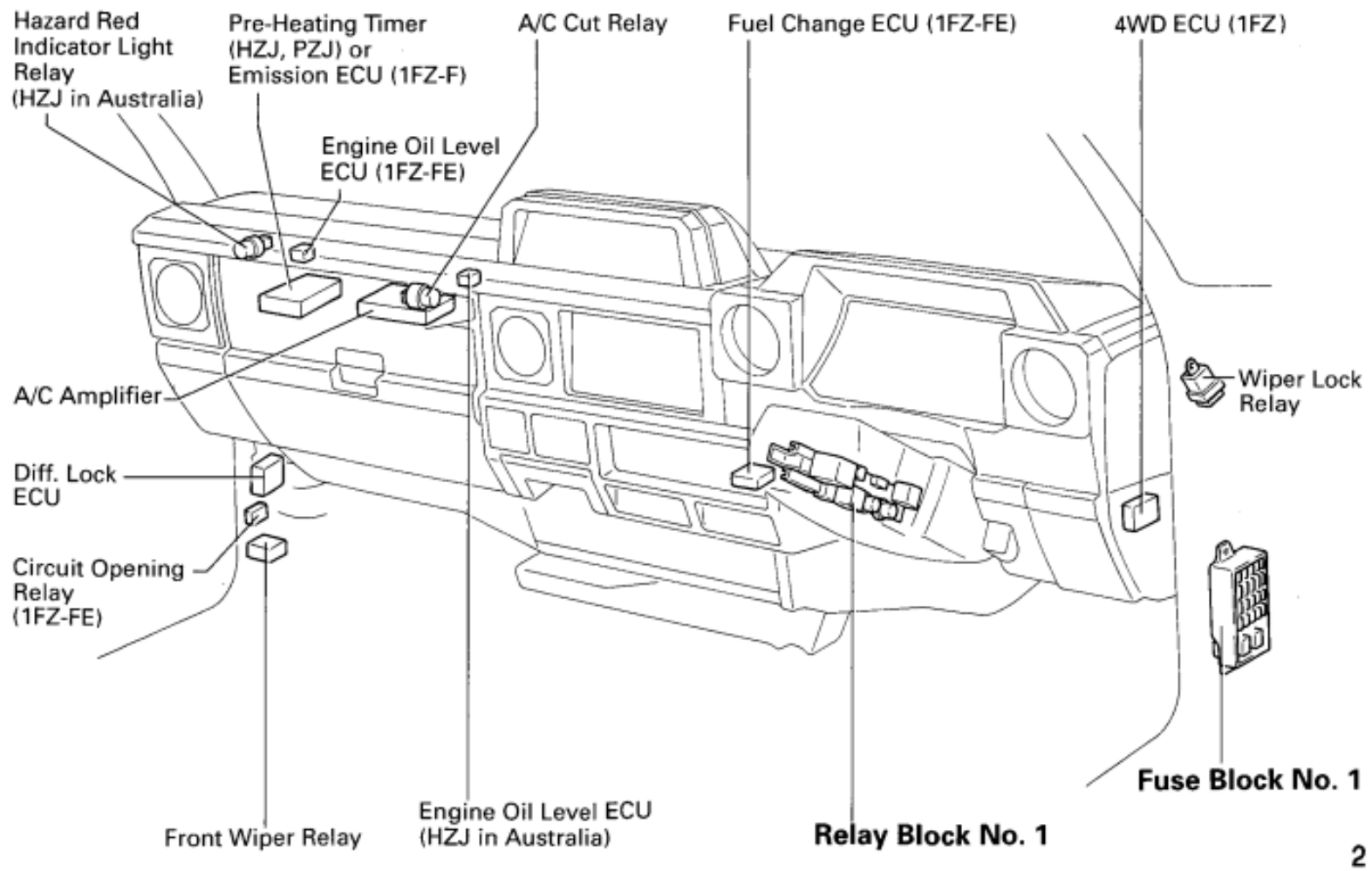

[Body]

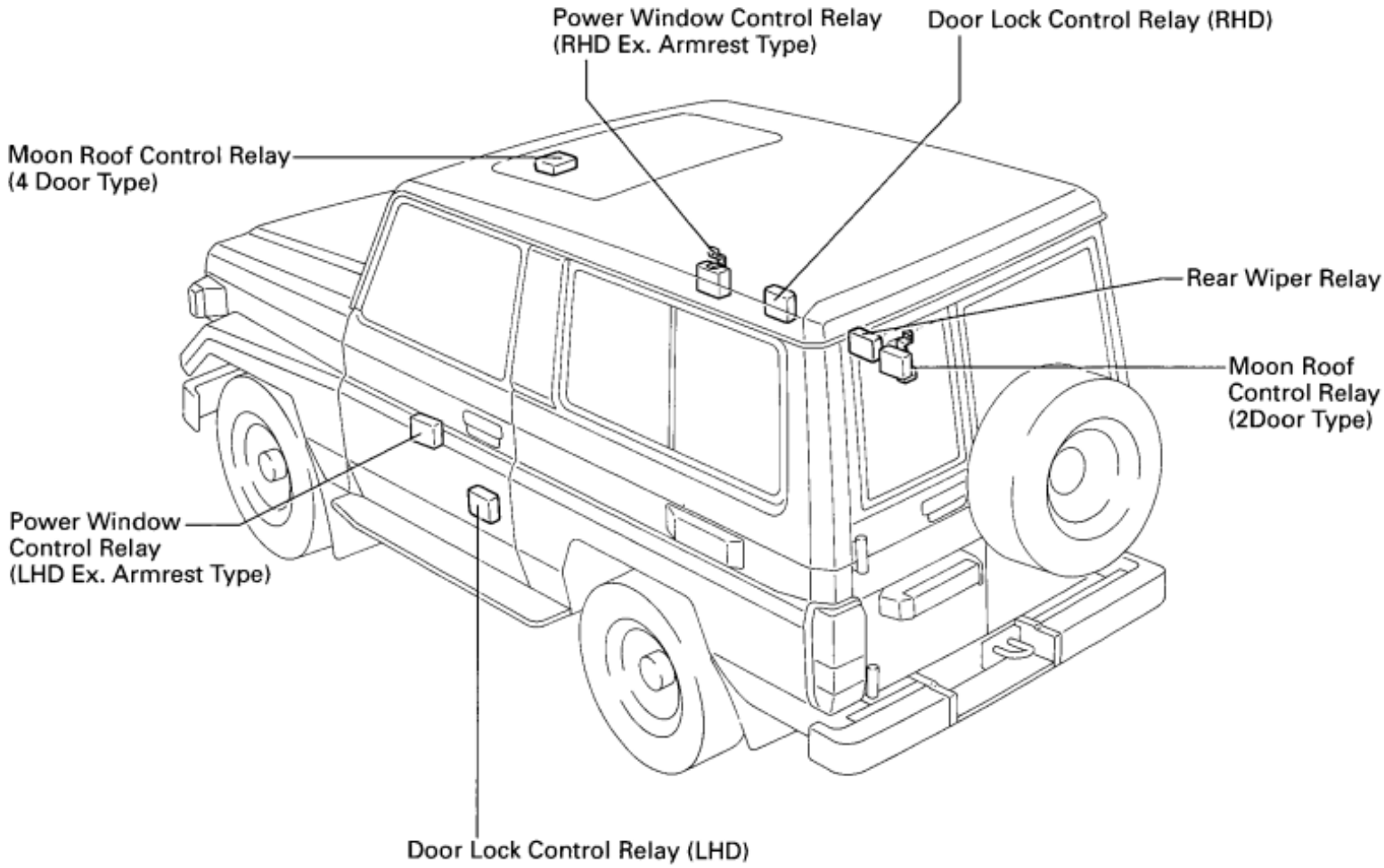

① : R/B No. 1	LHD: Left Side of Steering Column Tube (See Page 27, 28)
	RHD: Right Side of Steering Column Tube (See Page 27, 28)

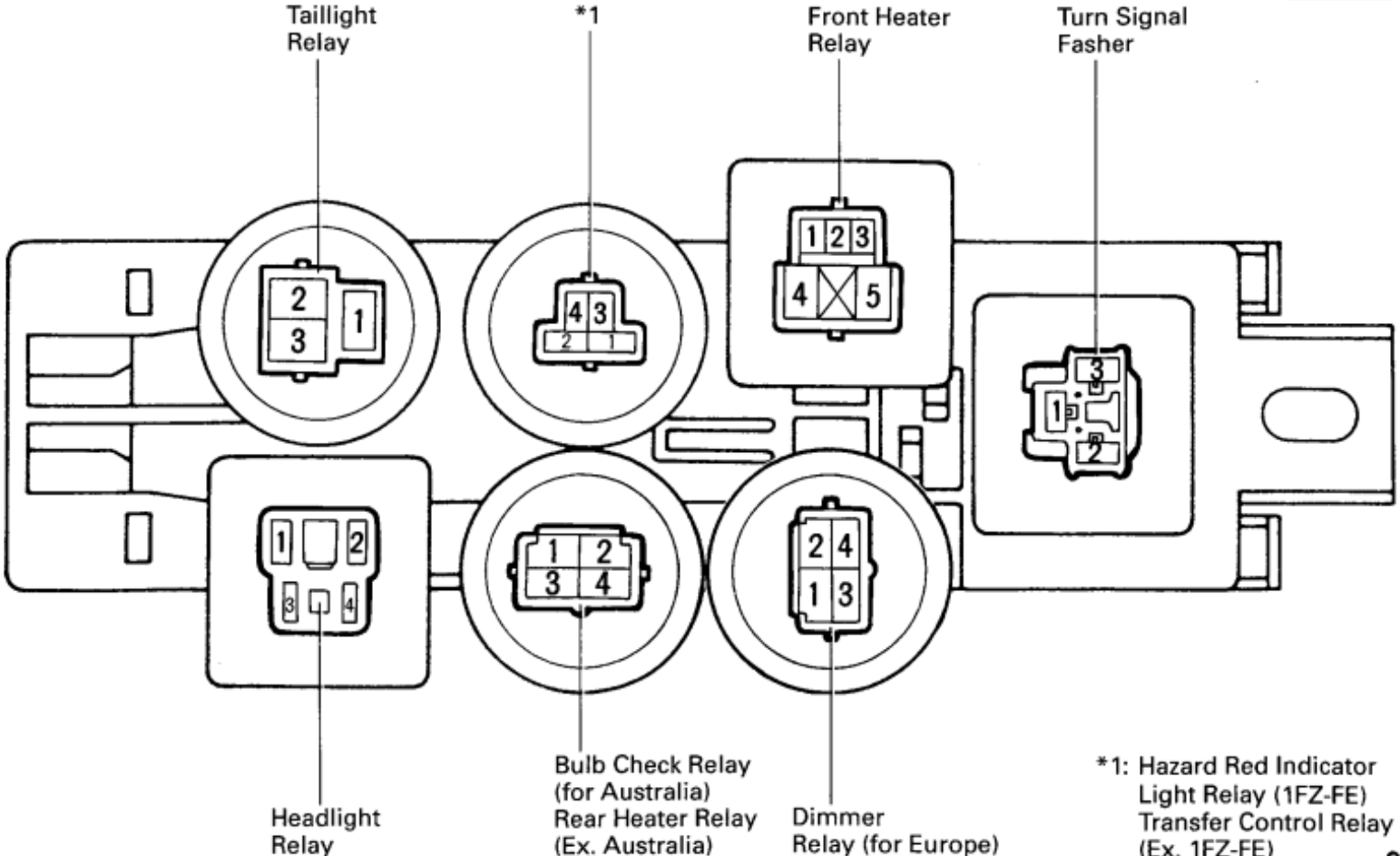

*1: Hazard Red Indicator Light Relay (1FZ-FE)
Transfer Control Relay (Ex. 1FZ-FE)

D RELAY LOCATIONS

Fuse Block No. 1 (Europe)	LHD: Left Kick Panel (See Page 27, 28) RHD: Right Kick Panel (See Page 27, 28)

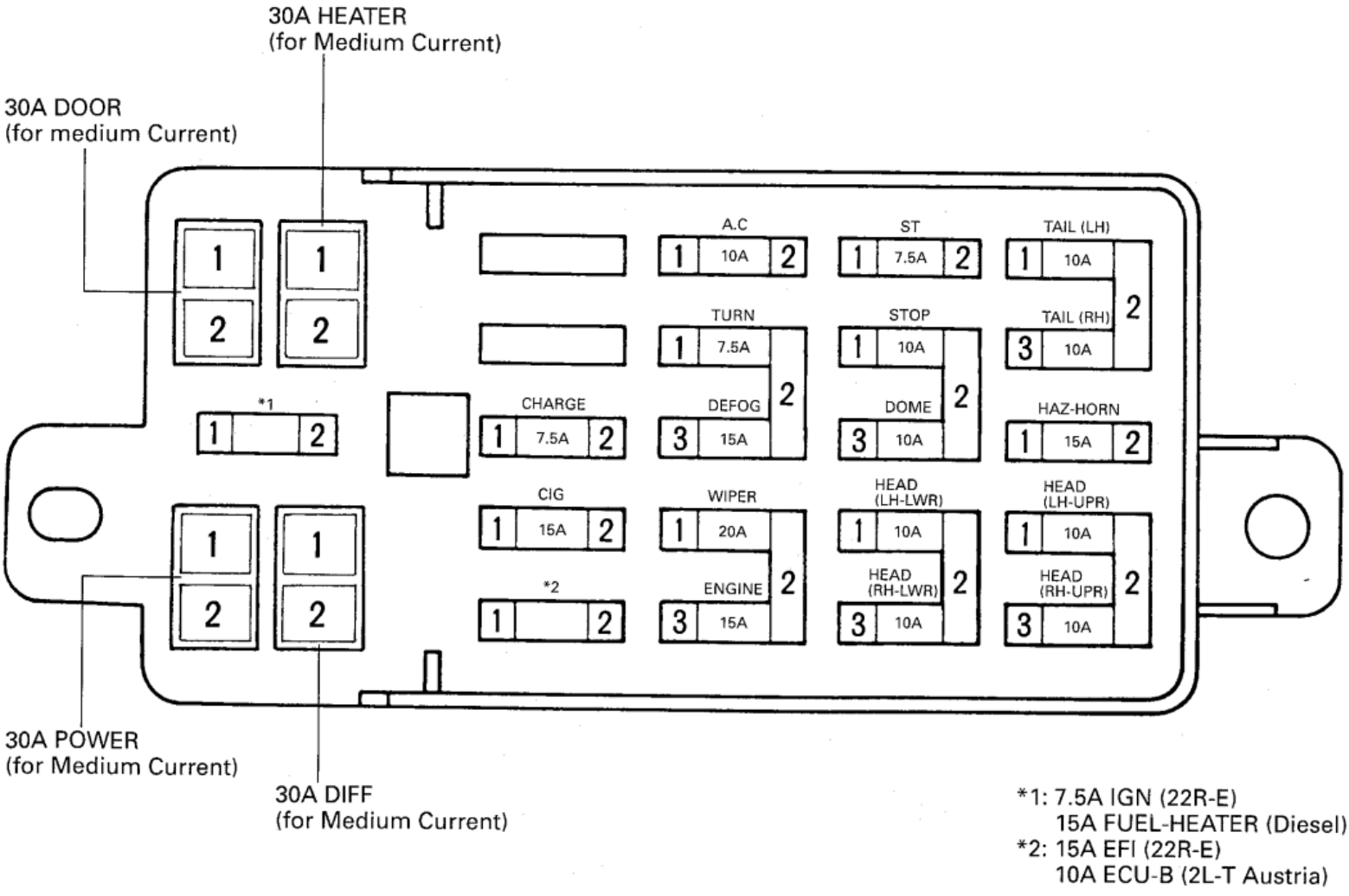

*1: 7.5A IGN (22R-E)
15A FUEL-HEATER (Diesel)
*2: 15A EFI (22R-E)
10A ECU-B (2L-T Austria)

Fuse Block No. 1 (Ex. Europe)	LHD: Left Kick Panel (See Page 27, 28) RHD: Right Kick Panel (See Page 27, 28)

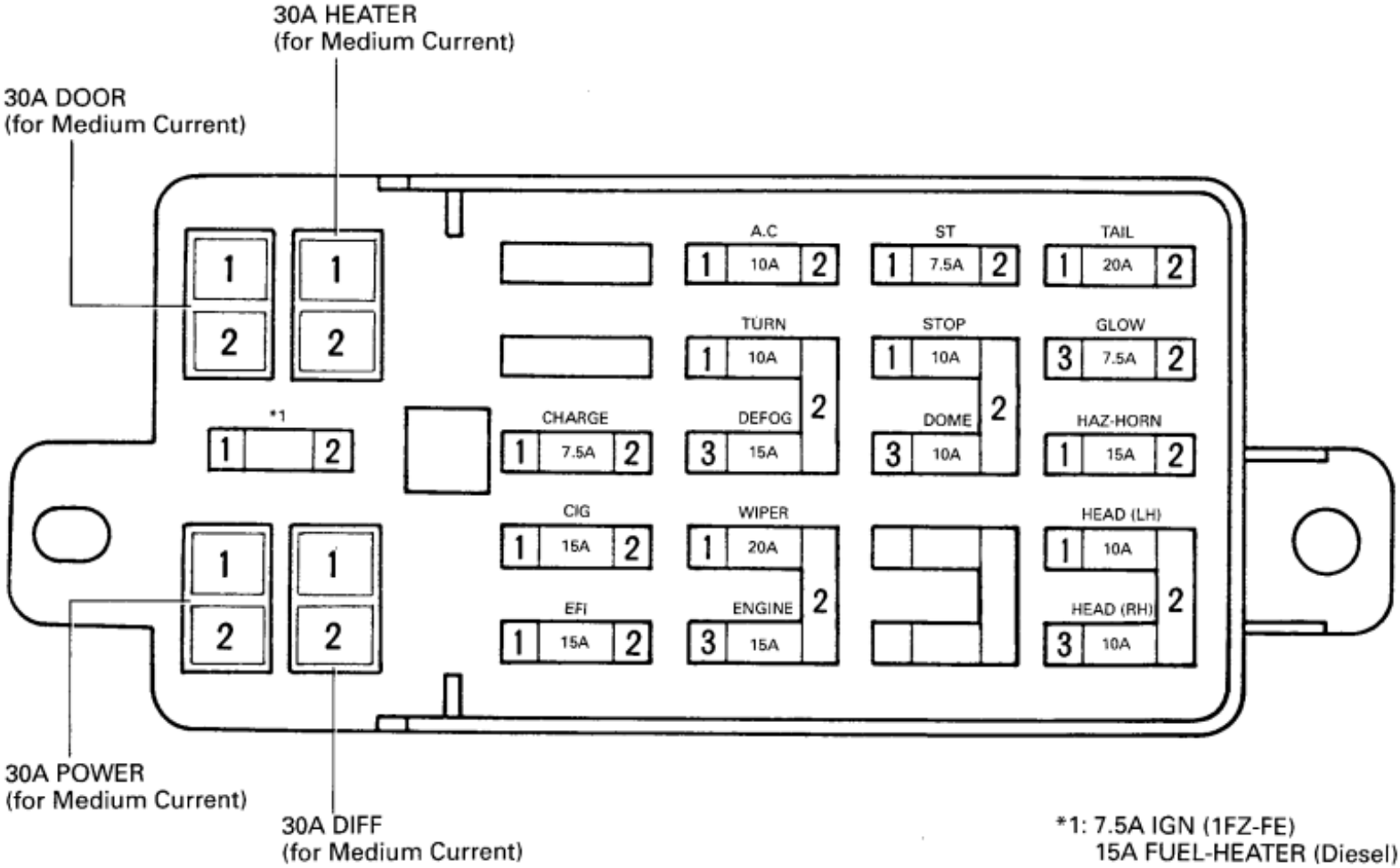

*1: 7.5A IGN (1FZ-FE)
15A FUEL-HEATER (Diesel)

Position of Parts in Engine Compartment

[LHD: 1HZ]

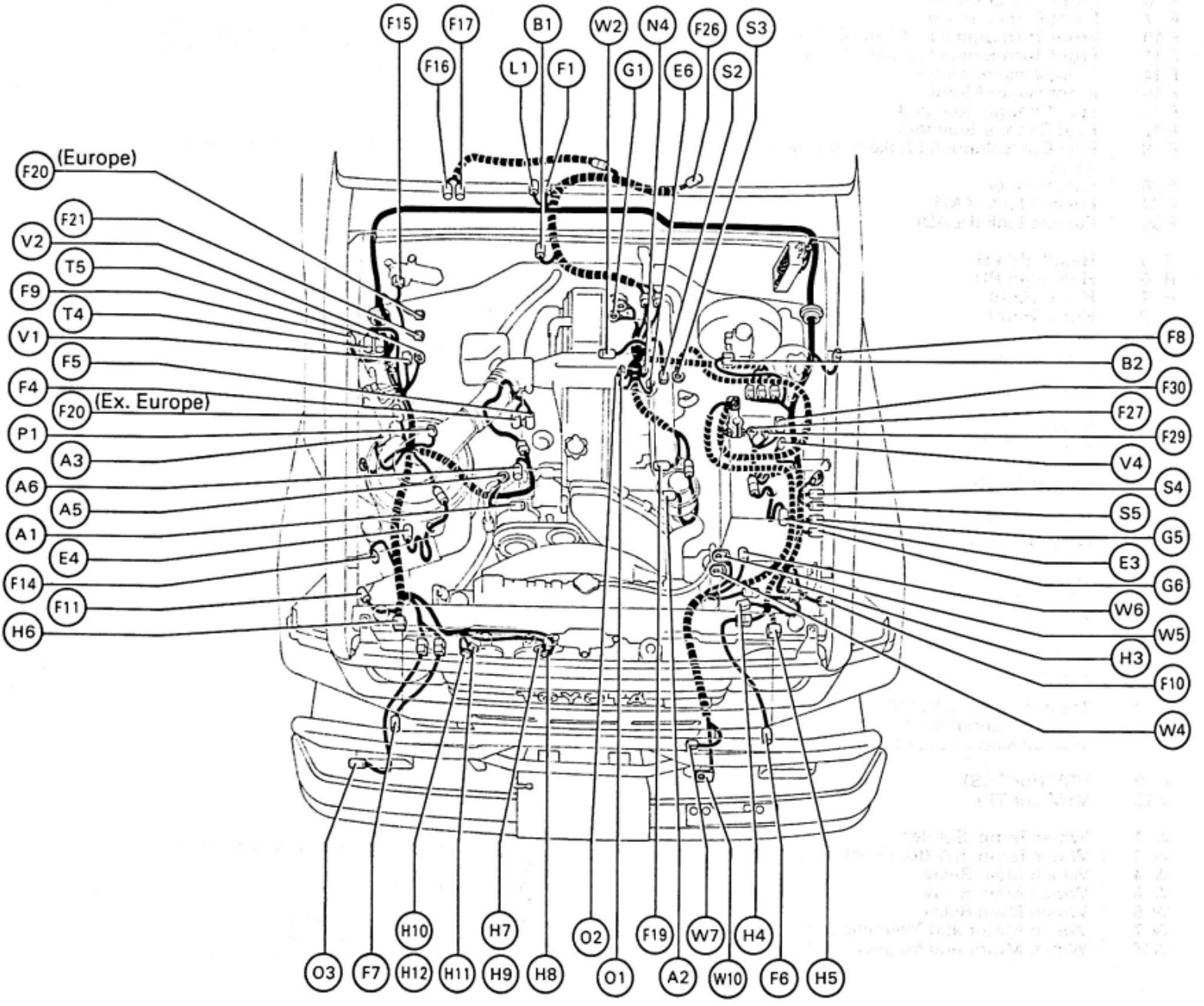

Position of Parts in Engine Compartment

Code	English	Français	Español
A 1	A/C Magnetic Clutch	Embrayage magnétique d'air conditionné	Embrague magnético del acondicionador de aire
A 2	A/C Water Temp. SW	Contacteur de température d'eau d'air conditionné	Interruptor de temperatura del agua del acondicionador de aire
A 3	Air Cleaner Warning SW	Contacteur d'avertissement de filtre à air	Interruptor de aviso del filtro de aire
A 5	Alternator	Alternateur	Alternador
A 6	Alternator	Alternateur	Alternador
B 1	Back-Up Light SW	Contacteur de feux de recul	Interruptor de la luz de retroceso
B 2	Brake Fluid Level SW	Contacteur de niveau de liquide de frein	Interruptor de nivel de fluido del freno
E 3	Electrical Locking Hub Motor LH	Moteur gauche de moyeu de blocage électrique	Motor del cubo de bloqueo eléctrico izquierdo
E 4	Electrical Locking Hub Motor RH	Moteur droit de moyeu de blocage électrique	Motor del cubo de bloqueo eléctrico derecho
E 6	Engine Oil Level Sensor	Capteur de niveau d'huile moteur	Sensor del nivel del aceite de motor
F 1	4WD Indicator SW	Contacteur de témoin de traction par 4 roues motrices	Interruptor del indicador de 4WD
F 4	Front Diff. Lock Motor	Moteur de verrouillage de différentiel avant	Motor de bloqueo de diferencial delantero
F 5	Front Diff. Lock SW	Contacteur de verrouillage de différentiel avant	Interruptor de bloqueo de diferencial delantero
F 6	Front Fog Light LH	Feu antibrouillard avant gauche	Luz antiniebla frontal, izquierdo
F 7	Front Fog Light RH	Feu antibrouillard avant droite	Luz antiniebla frontal, derecho
F 8	Front Side Turn Signal Light LH	Feu de clignotant latéral avant gauche	Luz de la señal de virage lateral delantera, izquierda
F 9	Front Side Turn Signal Light RH	Feu de clignotant latéral avant droite	Luz de la señal de viraje lateral delantera, derecha
F 10	Front Turn Signal Light and Clearance Light LH	Feu de clignotant et feux de gabarit, avant, gauche	Luz de señal de viraje y luz de posición, delantera, izquierda
F 11	Front Turn Signal Light and Clearance Light RH	Feu de clignotant et feux de gabarit, avant, droite	Luz de señal de viraje y luz de posición, delantera, derecha
F 14	Front Washer Motor	Moteur de lave-glace avant	Motor del lavador delantero
F 15	Front Wiper Motor	Moteur de contrôle d'essuie-glace de pare-brise avant	Motor del limpiador delantero
F 16	Fuel Change Solenoid	Solenoïde de commande de carburant	Solenoide de cambio de combustible
F 17	Fuel Change Solenoid	Solenoïde de commande de carburant	Solenoide de cambio de combustible
F 19	Fuel Cut Solenoid and Pick Up Sensor	Solenoïde de commande de coupure d'alimentation et capteur de signal de vitesse	Solenoide de corte de combustible y sensor captor
F 20	Fuel Filter Warning SW	Contacteur d'avertissement de filtre à essence	Interruptor de advertencia de filtro de combustible
F 21	Fuel Heater	Chauffage de carburant	Calefactor de combustible
F 26	Fuel Sender	Sonde de niveau de carburant	Transmisor de combustible
F 27	Fusible Link (AM1)	Elément-fusible (AM1)	Eslabón fusible (AM1)
F 29	Fusible Link (GLOW)	Elément-fusible (GLOW)	Eslabón fusible (GLOW)
F 30	Fusible Link (HEAD)	Elément-fusible (HEAD)	Eslabón fusible (HEAD)
G 1	Glow Plug	Bougie de préchauffage	Tapón encendedor
G 5	Glow Plug Relay (for After Glow)	Relais de bougie de préchauffage (pour après pré-chauffage)	Relé del tapón encendedor (para postencendido)
G 6	Glow Plug Relay (for After Glow)	Relais de bougie de préchauffage (pour après pré-chauffage)	Relé del tapón encendedor (para postencendido)
H 3	Headlight Cleaner Motor	Moteur de lave-phares	Motor del lavador de los faros
H 4	Headlight Cleaner Relay	Relais de lave-phares	Relé del lavador de los faros
H 5	Headlight LH	Phare gauche	Faro izquierdo
H 6	Headlight RH	Phare droite	Faro derecho
H 7	Horn (High)	Avertisseur sonore (Aigu)	Bocina(alta)
H 8	Horn (High)	Avertisseur sonore (Aigu)	Bocina(alta)
H 9	Horn (High)	Avertisseur sonore (Aigu)	Bocina(alta)
H 10	Horn (Low)	Avertisseur sonore (Grave)	Bocina(baja)
H 11	Horn (Low)	Avertisseur sonore (Grave)	Bocina(baja)
H 12	Horn (Low)	Avertisseur sonore (Grave)	Bocina(baja)
L 1	L4 Position SW	Cont de position L4	Interruptor de posición de L4
N 4	Noise Filter (for Oil Pressure Sender)	Filtre anti-parasites (Pour capteur de pression d'huile)	Filtro de ruido (para transmisor de presión de aceite)
O 1	Oil Pressure Sender (+)	Capteur de pression d'huile (+)	Transmisor de presión de aceite (+)
O 2	Oil Pressure Sender (–)	Capteur de pression d'huile (–)	Transmisor de presión de aceite (–)
O 3	Outer Ambient Temp. Sensor	Capteur de température ambiante extérieure	Sensor de la temperature ambiente exterior
P 1	Power Outlet	Prise électrique	Tomacorriente
S 2	Starter	Démarreur	Arrancador
S 3	Starter	Démarreur	Arrancador
S 4	Starter Relay	Relais de démarreur	Relé de arrancador
S 5	Starter Relay	Relais de démarreur	Relé de arrancador
T 4	Transfer Control Solenoid (2WD)	Solenoïde de commande de transfert (2WD)	Solenoide de control de la transferencia (2WD)
T 5	Transfer Control Solenoid (4WD)	Solenoïde de commande de transfert (4WD)	Solenoide de control de la transferencia (4WD)
V 1	Vacuum SW (for Brake)	Contacteur à dépression (pour frein)	Interruptor de vacío (para el freno)
V 2	Vaccum SW (for Brake)	Contacteur à dépression (pour frein)	Interruptor de vacío (para freno)
V 4	VSV (for A/C Idle-Up)	Soupape de commutation à dépression (pour ralenti accéléré de climatiseur)	VSV (para marcha en vacío acelerada para el acondicionador de aire)
W 2	Water Temp. Sensor (for Glow)	Capteur de température d'eau (pour pré-chauffage)	Sensor de la temperatura del agua (para encendedor)
W 4	Winch Main Relay	Relais principal de treuil	Relé principal de la grúa
W 5	Winch Main Relay	Relais principal de treuil	Relé principal de la grúa
W 6	Winch Main Relay	Relais principal de treuil	Relé principal de la grúa
W 7	Winch Motor and Magnetic SW	Moteur de treuil et cont d'électro-aimant	Motor de la grúa y interruptor magnético
W 10	Winch Motor and Magnetic SW	Moteur de treuil et cont d'électro-aimant	Motor de la grúa y interruptor magnético

E ELECTRICAL WIRING ROUTING

▭ : Location of Connector Joining Wire Harness and Wire Harness
▽ : Location of Ground Points

[LHD: 1HZ]

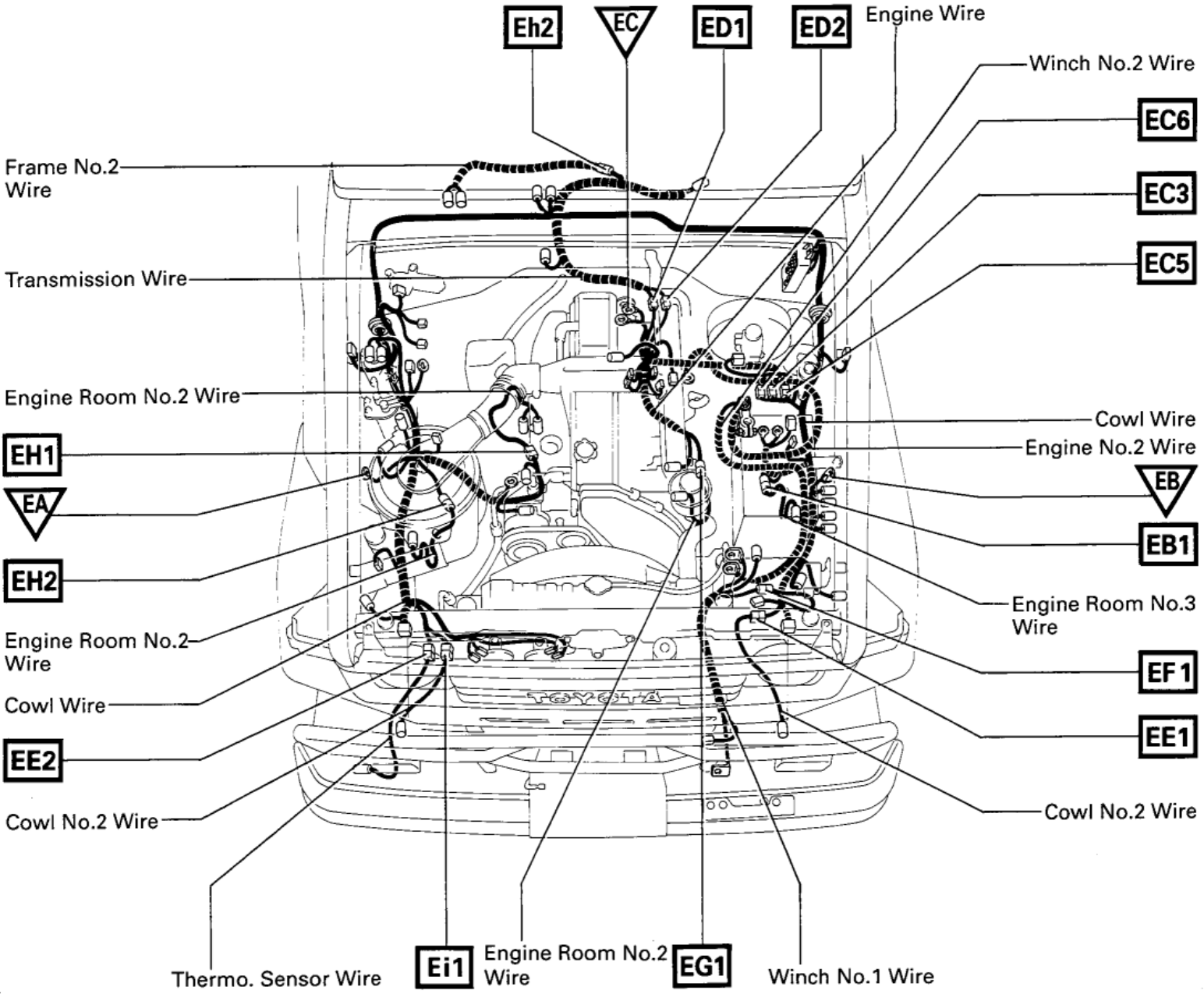

Connector Joining Wire Harness and Wire Harness

EB1 GRAY

EC3 GRAY

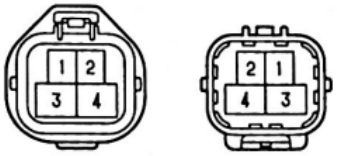

EC5 GRAY

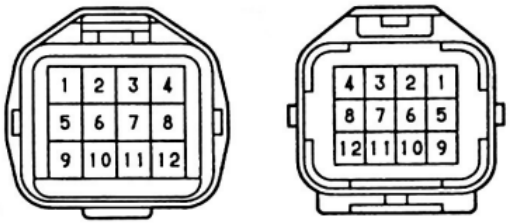

EC6 DARK GRAY

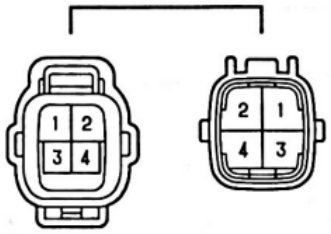

ED1 GRAY

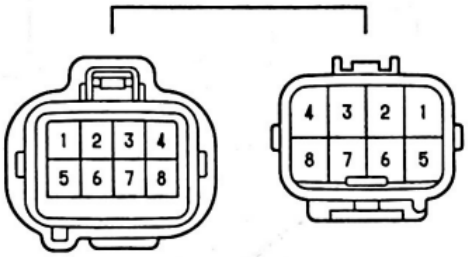

ED2 GRAY

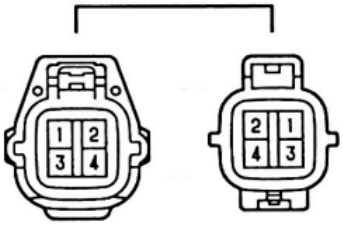

EE1 GRAY

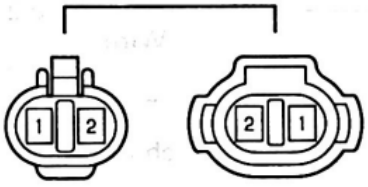

EE2 GRAY

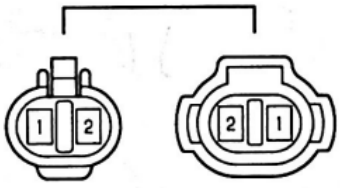

EF1 BLACK

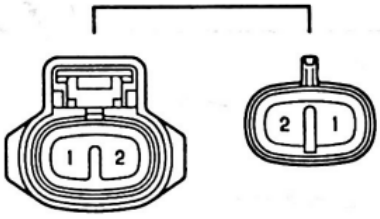

EG1 GRAY

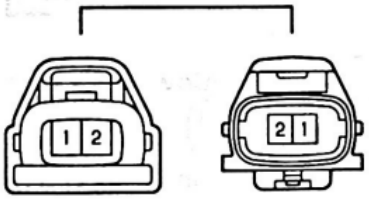

EH1 GRAY

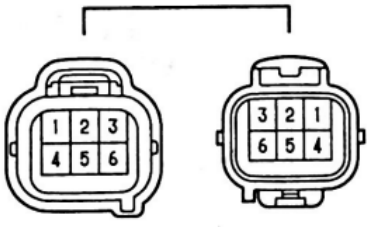

EH2 GRAY

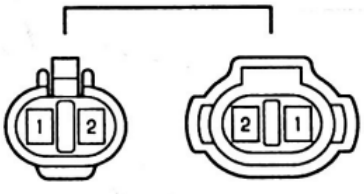

Eh2 GRAY

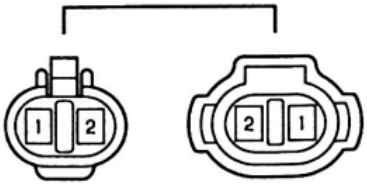

Ei1 GRAY

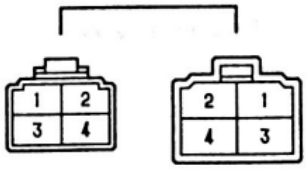

Position of Parts in Instrument Panel

[LHD]

*1: 2L-T Austria
*2: Ex. 2L-T Austria

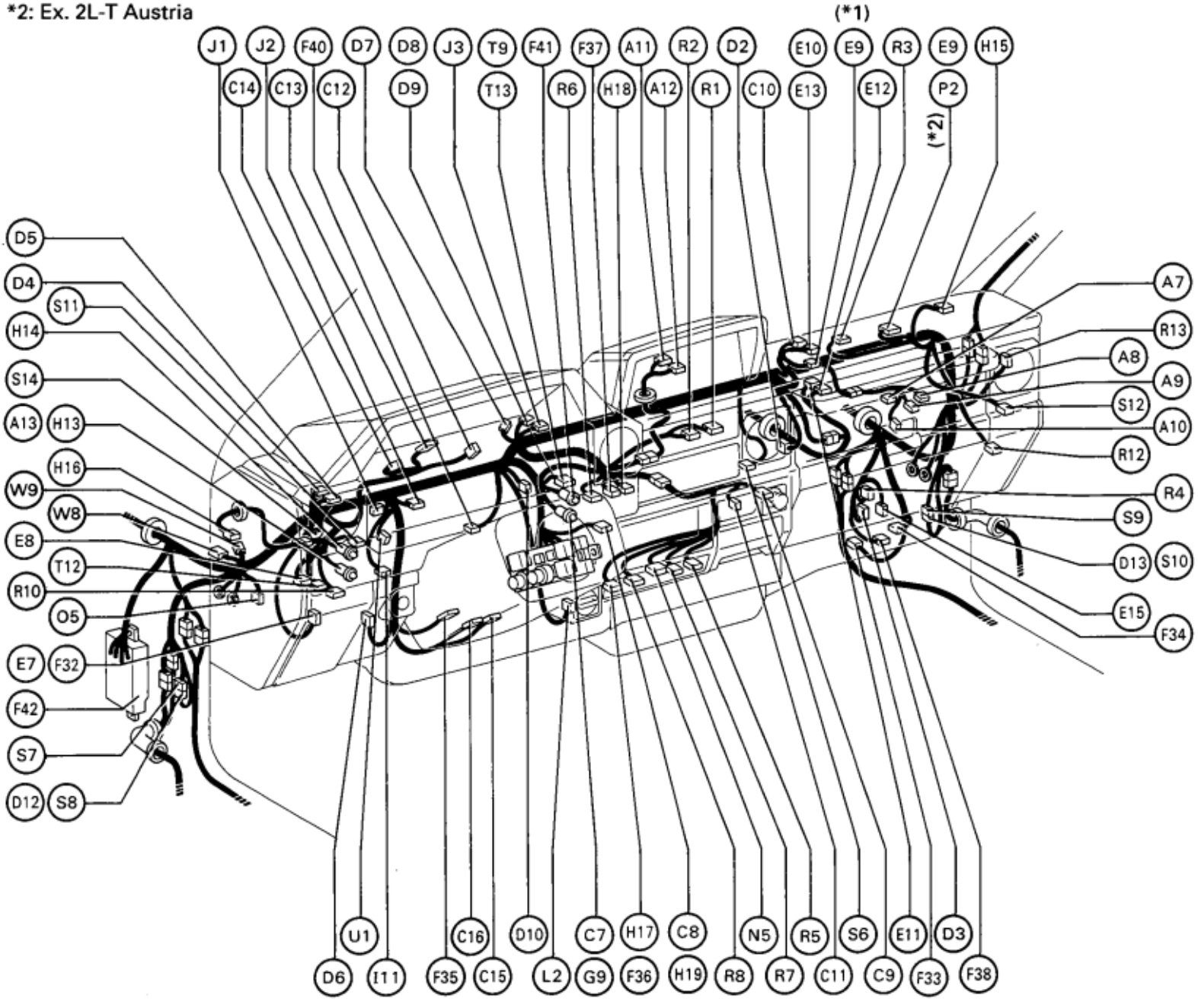

Position of Parts in Instrument Panel

Code	English	Deutsch
A 7	A/C Amplifier	Klimaanlagenverstärker
A 8	A/C Cut Relay	Klimaanlagenabschaltrelais
A 9	A/C Dual Pressure SW	Klimaanlage-Dual-Druckschalter
A 10	A/C Thermistor	Thermistor
A 11	Accessory Meter	Zusatzgerätenanzeige
A 12	Accessory Meter	Zusatzgerätenanzeige
A 13	Air Cleaner Warning Light	Luftfilter-Warnleuchte
C 7	Check Engine Warning Light	Motorprüfwarnleuchte
C 8	Chime (for Speed Warning)	Akustisches Signal (für Drehzahlwarnung)
C 9	Cigarette Lighter	Zigarettenanzünder
C 10	Circuit Opening Relay	Schaltkreisrelais
C 11	Clock	Uhr
C 12	Combination Meter	Kombiinstrument
C 13	Combination Meter	Kombiinstrument
C 14	Combination Meter	Kombiinstrument
C 15	Combination SW	Kombischalter
C 16	Combination SW	Kombischalter
D 2	Daytime Running Light Relay or Short Connector	Tagesfahrleuchtenrelais oder Kurzschlußstecker
D 3	Diff. Lock ECU	Differentialsperrsteuergerät
D 4	Diode (for Air Cleaner and Fuel Filter)	Diode (für Luft- und Kraftstoffilter)
D 5	Diode (for Air Cleaner)	Diode (für Luftfilter)
D 6	Diode (for Fuel Filter)	Diode (für Kraftstoffilter)
D 7	Diode (for Fuel Filter and Light Reminder)	Diode (für Kraftstoffilter und Beleuchtungswarnung)
D 8	Diode (for Interior Light)	Diode (für Innenleuchte)
D 9	Diode (for Light Reminder)	Diode (für Bleleuchtungswarnung)
D 10	Diode (for Rear Fog Light)	Diode (für Nebelschlußleuchte)
D 12	Door Courtesy SW Front LH	Türleuchtenschalter, vorne, links
D 13	Door Courtesy SW Front RH	Turleuchtenschalter, vorne, rechts
E 7	Electrical Locking Hub ECU	Nabensperrsteuergerät
E 8	Electrical Locking Hub SW	Nabensperrschalter
E 9	Emission ECU	Abgasreinigungssteuergerät
E 10	Emission ECU	Abgasreinigungssteuergerät
E 11	Engine ECU	Motorsteuergerat
E 12	Engine ECU	Motorsteuergerät
E 13	Engine ECU	Motorsteuergerät
E 15	Engine Oil Level ECU	Motorölstandsteuergerät
F 32	4WD ECU	Vierradantriebssteuergerät
F 33	Front Blower Motor	Vorderer Gebläsemotor
F 34	Front Blower Resistor	Vorderer Gebläsewiderstand
F 35	Front Diff. Lock SW	Vorderer Differentialsperrschalter
F 36	Front Fog Light SW	Nebelscheinwerferschalter
F 37	Front Heater Blower SW	Vorderer Heizgebläseschalter
F 38	Front Wiper Relay	Scheibenwischerrelais
F 40	Fuel Filter Warning Buzzer	Wasserabscheider-Warnsummer
F 41	Fuel Filter Warning Light	Wasserabscheider-Warnleuchte
F 42	Fuse Box	Sicherungskasten
G 9	Glow Indicator Light	Vorglühanzeige
H 13	Hazard Red Indicator Light	Warnblinkkontrolleuchte
H 14	Hazard Red Indicator Light	Warnblinkkontrolleuchte
H 15	Hazard Red Indicator Light Relay	Warnblinkkontrolleuchtenrelais
H 16	Headlight Beam Level Control SW	Leuchtweitenstellschalter
H 17	Headlight Cleaner SW	Scheinwerferwaschерschalter
H 18	Heater Illumination	Heizungsbeleuchtung
H 19	Horn Relay	Hupenrelais
I 11	Ignition SW	Zündschalter
J 1	Junction Connector No. 1	Verbindungsstecker Nr. 1
J 2	Junction Connector No. 2	Verbindungsstecker Nr. 2
J 3	Junction Connector No. 3	Verbindungsstecker Nr. 3
L 2	Light Reminder Relay	Beleuchtungsrelais
N 5	No. 1 Instrument Cluster Illumination	Instrumentenbeleuchtung Nr. 1
O 5	Option Connector	Zusatzstecker
P 2	Pre-Heating Timer	Vorheizschaltuhr
R 1	Radio and Player	Radio und Cassettenspieler
R 2	Radio and Player	Radio und Cassettenspieler
R 3	Rear Fog Light Relay (2L-T (Europe (Ex. Austria)), 22R)	Nebelschlußleuchtenrelais (2L-T (Europa(außer Österreich)), 22R)
R 4	Rear Fog Light Relay (2L-T (Austria), 22R-E)	Nebelschlußleuchtenrelais (2L-T (Österreich), 22R-E)
R 5	Rear Fog Light SW	Nebelschlußleuchtenschalter
R 6	Rear Heater Blower SW	Hinterer Gebläseschalter
R 7	Rear Window Defogger SW	Heckscheibenheizungsschalter
R 8	Rear Wiper and Washer SW	Heckscheibenwischer-und Wascherschalter
R 10	Remote Control Mirror SW	Außenspiegelstellschalter
R 12	Room Temp. Sensor No. 1	Innenraumtemperaturfühler Nr. 1
R 13	Room Temp. Sensor No. 2	Innenraumtemperaturfuhler Nr. 2
S 6	Seat Belt Warning Relay	Gurtwarnsignalrelais
S 7	Short Pin (for Door Courtesy SW LH)	Kurzschlußstecker (für Türleuchtenschalter, links)
S 8	Short Pin (for Door Courtesy SW LH)	Kurzschlußstecker (für Türleuchtenschalter, links)
S 9	Short Pin (for Door Courtesy SW RH)	Kurzschlußstecker (für Turleuchtenschalter, rechts)
S 10	Short Pin (for Door Courtesy SW RH)	Kurzschlußstecker (für Türleuchtenschalter, rechts)
S 11	Speaker Front Door LH	Vordertürlautsprecher, links
S 12	Speaker Front Door RH	Vordertürlautsprecher, rechts
S 14	Stop Light SW	Bremsleuchtenschalter
T 9	2-4 Select SW	2-4 Wahlschalter
T 12	Transfer Control SW (for Europe)	Verteilergetriebeschalter (für Europa)
T 13	Transfer Control Sw (for Ex. Europe)	Verteilergetriebeschalter (außer Europa)
U 1	Unlock Warning SW	Entriegelungs-Warnschalter
W 8	Wiper Lock Relay	Wischerverriegelungsrelais
W 9	Wiper Lock SW	Wischerverriegelungsschalter

E ELECTRICAL WIRING ROUTING

▭ : Location of Connector Joining Wire Harness and Wire Harness

▽ : Location of Ground Points

[LHD]

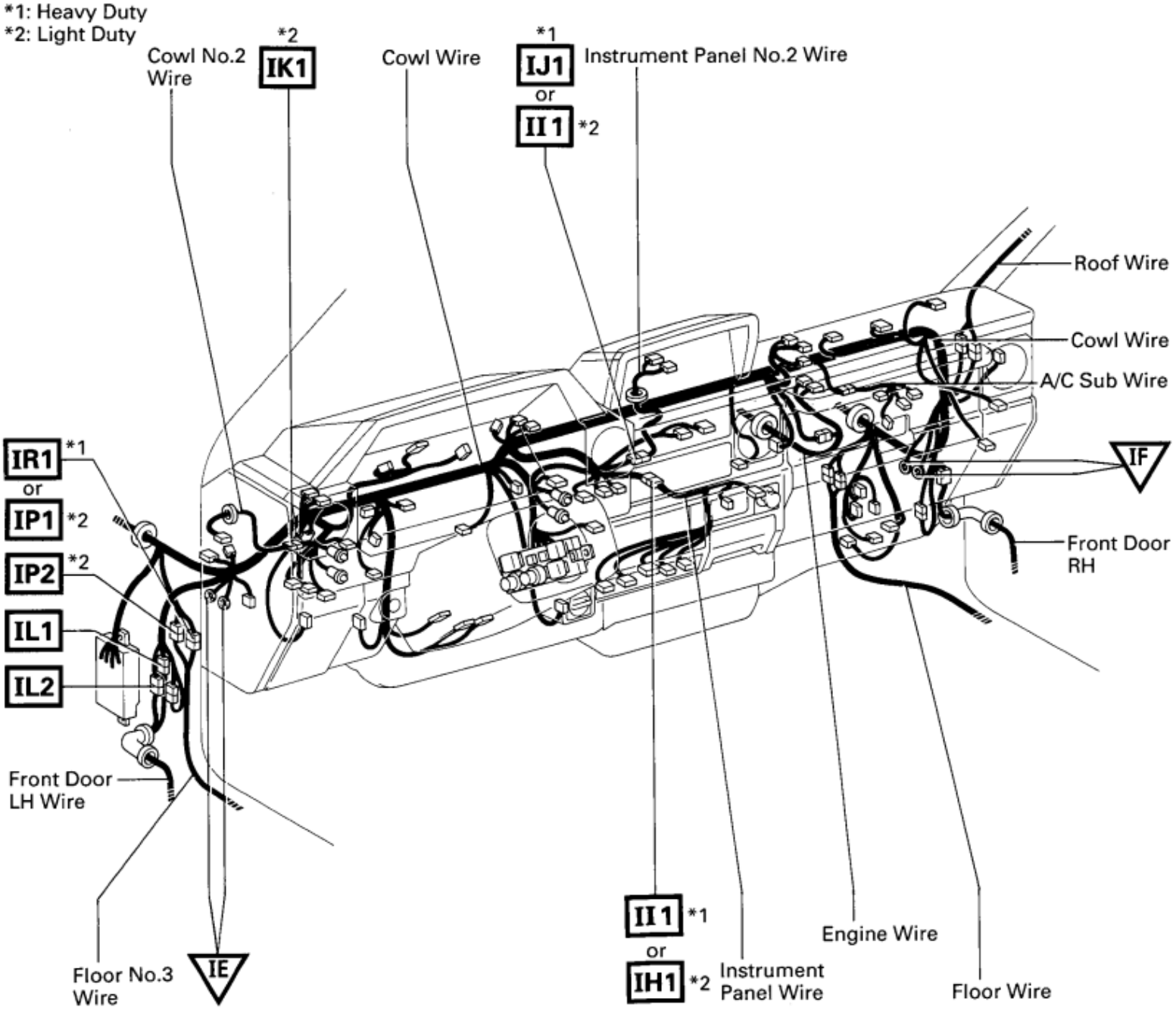

Connector Joining Wire Harness and Wire Harness

(Light Duty) IH1

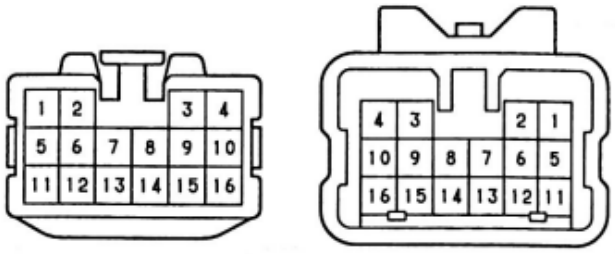

(Heavy Duty) II1

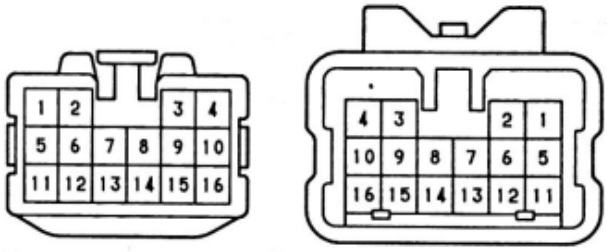

(Light Duty) II1

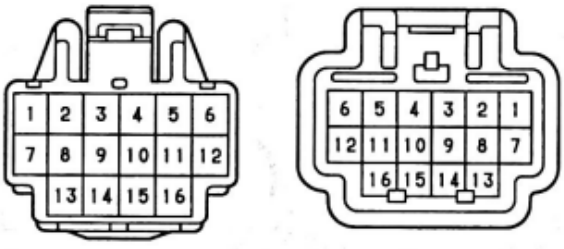

(Heavy Duty) IJ1

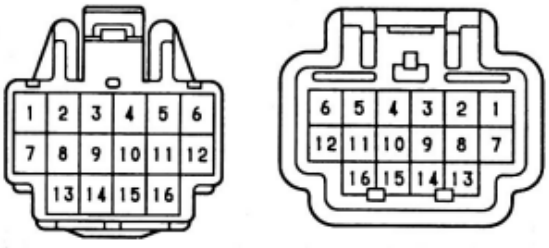

(Light Duty) IK1

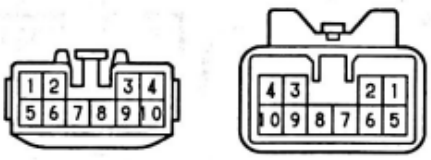

IL1

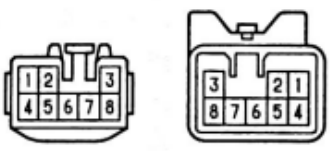

IL2

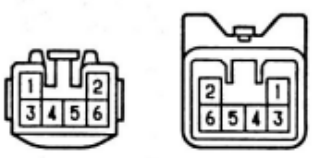

(Light Duty) IP1

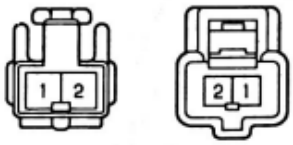

(Light Duty) IP2

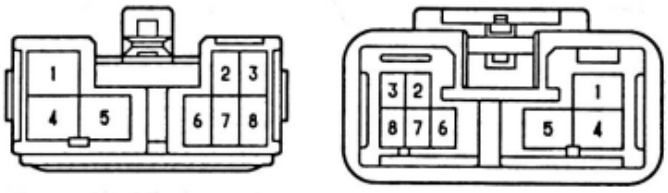

(Heavy Duty) IR1

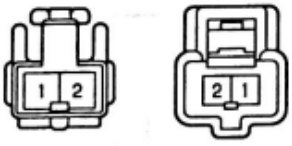

E ELECTRICAL WIRING ROUTING

▭ : Location of Connector Joining Wire Harness and Wire Harness
▽ : Location of Ground Points

[LHD]

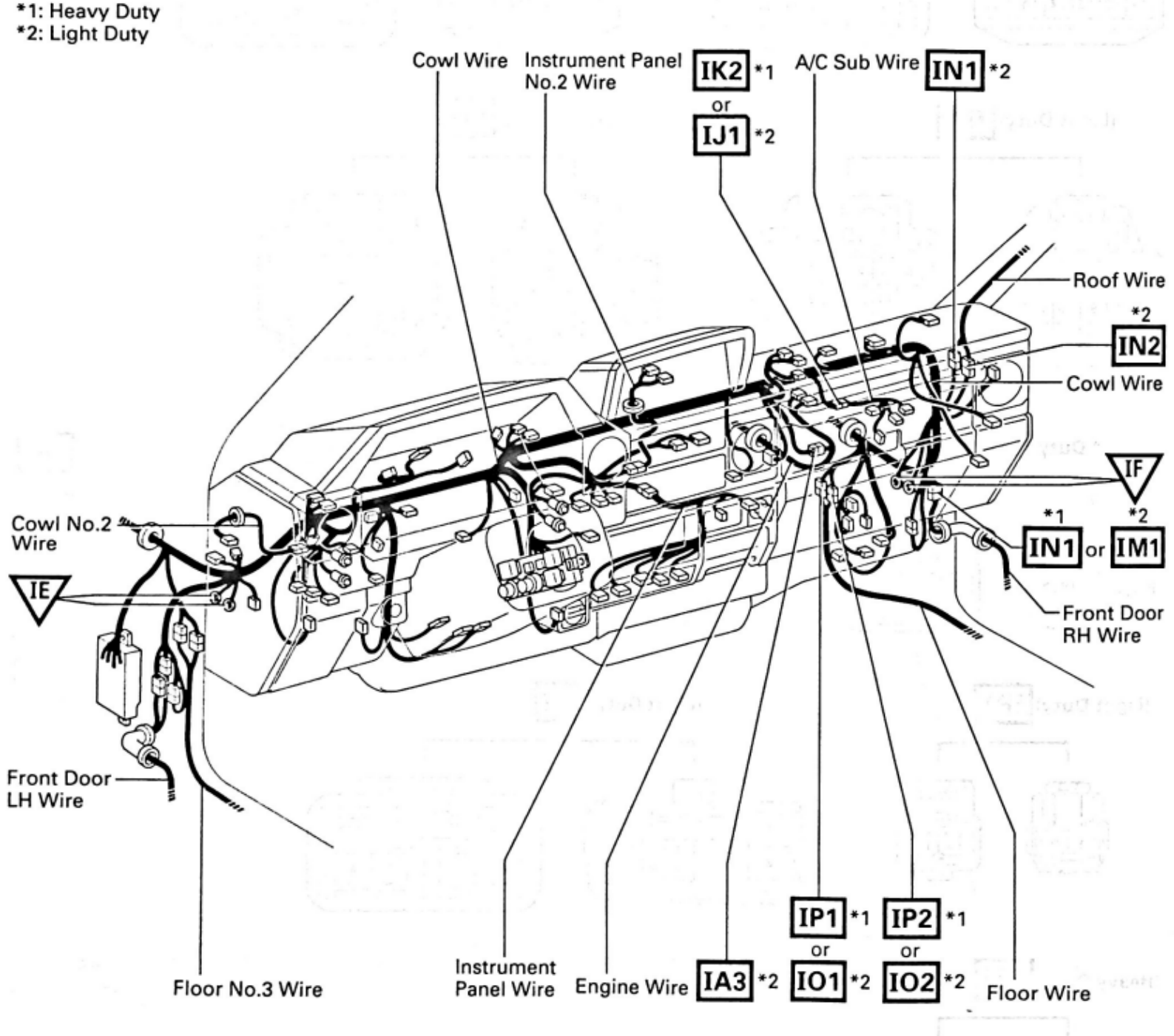

Connector Joining Wire Harness and Wire Harness

(Light Duty 22R-E) IA3

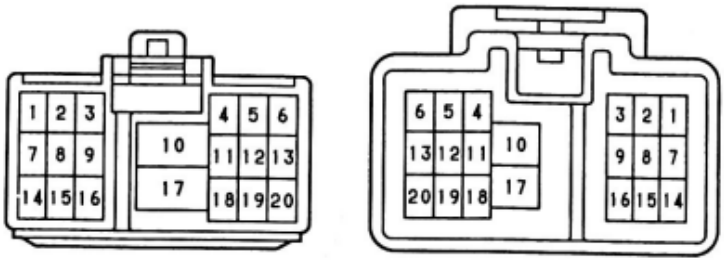

(Light Duty) IJ1

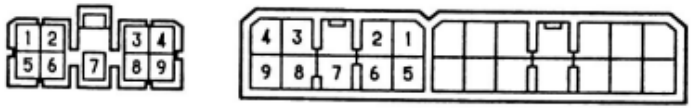

(Heavy Duty) IK2

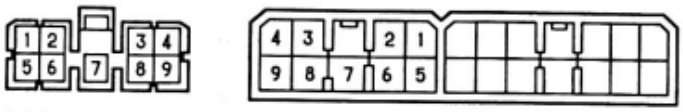

(Light Duty) IM1

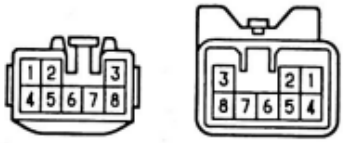

(Heavy Duty) IN1

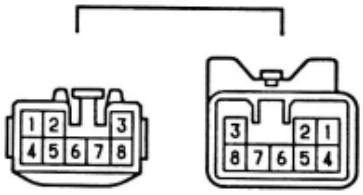

(Light Duty) IN1

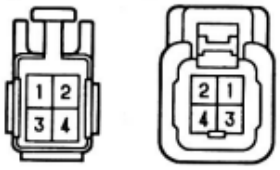

(Light Duty) IN2

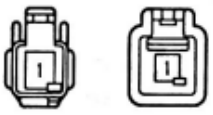

(Light Duty) IO1

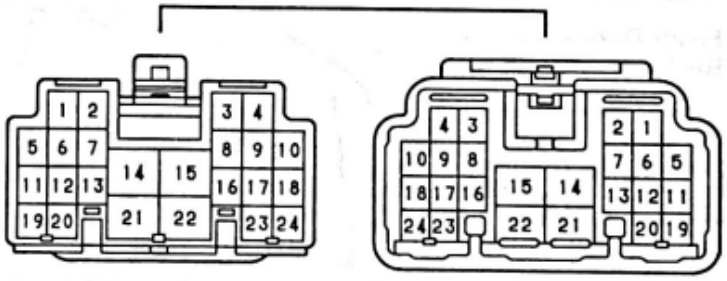

(Light Duty) IO2

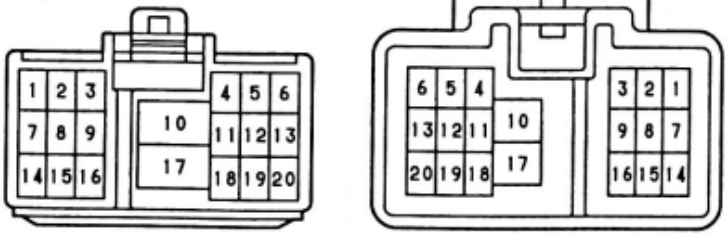

(Heavy Duty) IP1

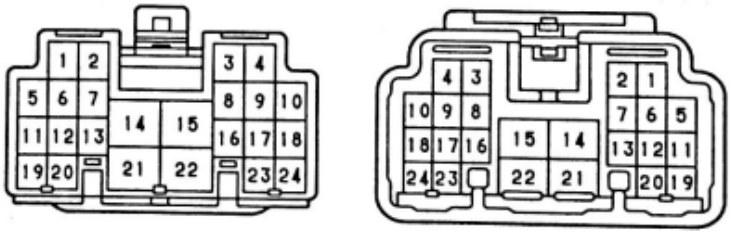

(Heavy Duty) IP2

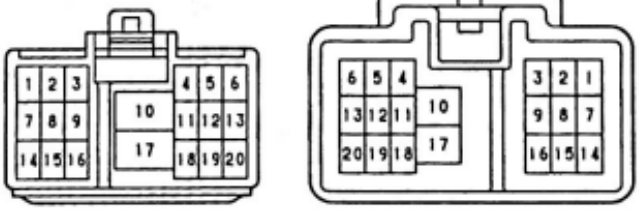

Position of Parts in Body

[LHD: Hardtop and Canvas Top]

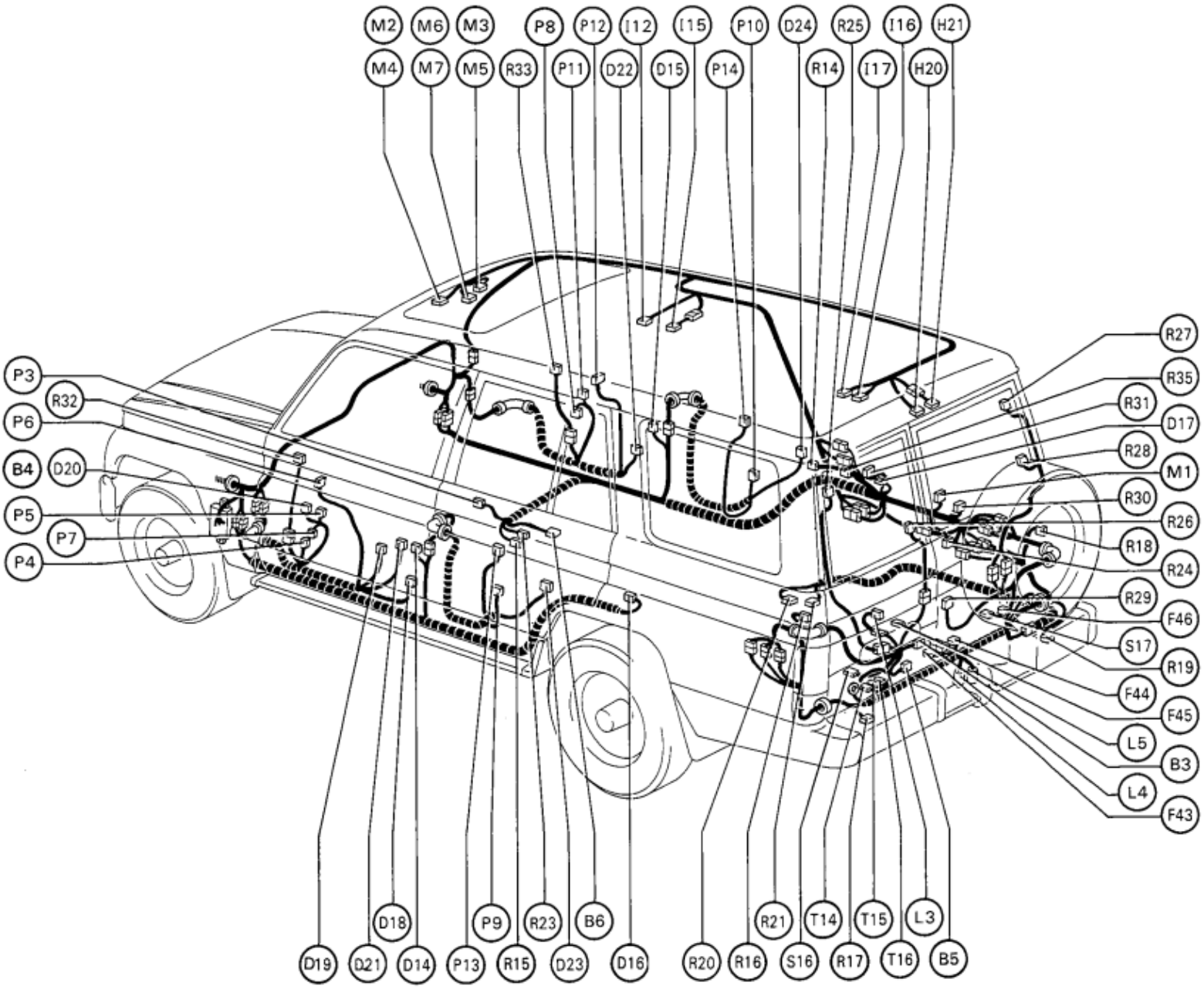

E ELECTRICAL WIRING ROUTING

▭ : Location of Connector Joining Wire Harness and Wire Harness
▽ : Location of Ground Points

[LHD: Hardtop and Canvas Top]

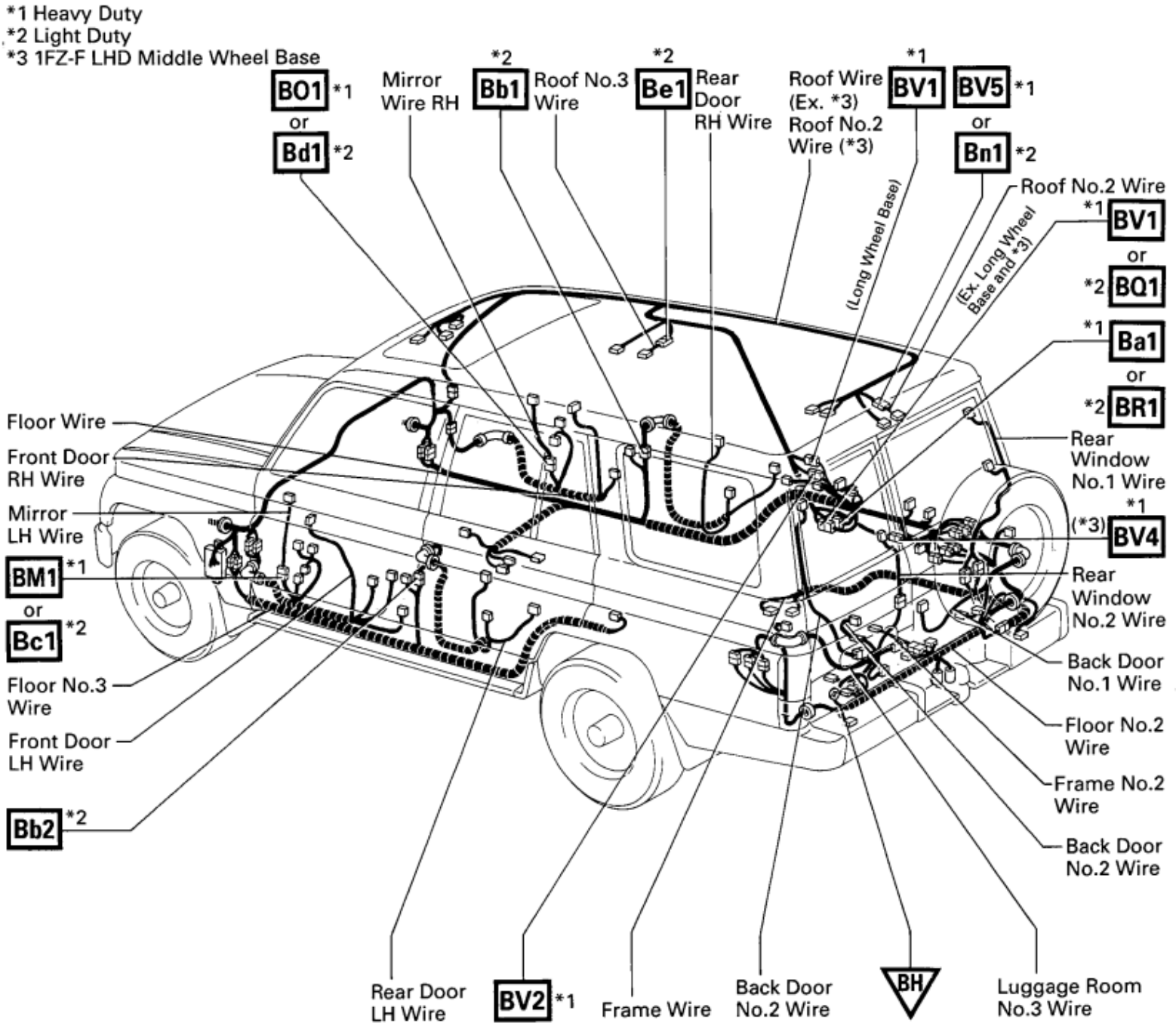

Connector Joining Wire Harness and Wire Harness

*3 1FZ-F LHD Middle Wheel Base
*4 Ex. Long Wheel Base and *3

(Heavy Duty) BM1

(Heavy Duty) BO1

(Light Duty) BQ1

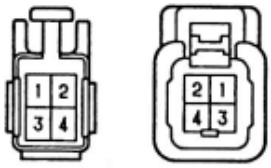

(Light Duty) BR1

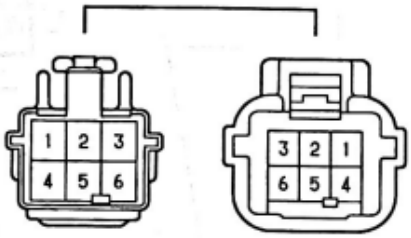

(Heavy Duty Long Wheel Base) BV1

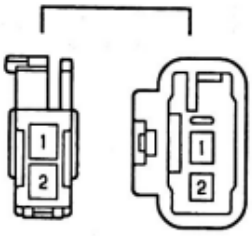

(Heavy Duty *4) BV1

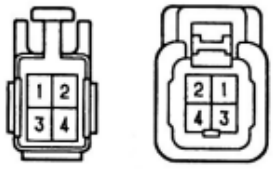

(Heavy Duty Long Wheel Base) BV2

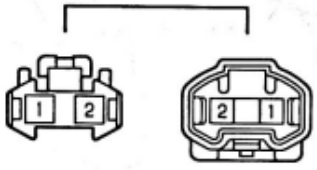

(Heavy Duty *3) BV4

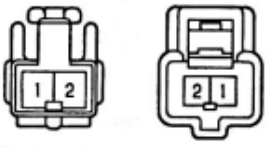

(Heavy Duty Short Wheel Base) BV5

(Heavy Duty *4) Ba1

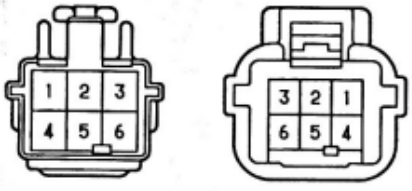

(Light Duty) Bb1

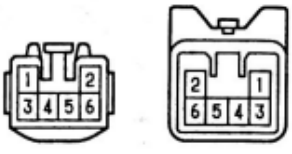

(Light Duty) Bb2

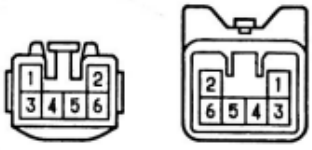

(Light Duty) Bc1

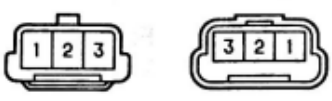

(Light Duty) Bd1

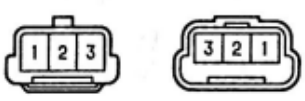

(Light Duty Semi-long Wheel Base w/ Moon Roof) Be1

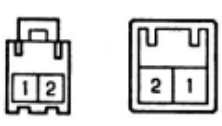

E ELECTRICAL WIRING ROUTING

▭ : Location of Connector Joining Wire Harness and Wire Harness

▽ : Location of Ground Points

[LHD: Hardtop and Canvas Top]

*1 Heavy Duty
*2 Light Duty
*3 1FZ-F LHD Middle Wheel Base

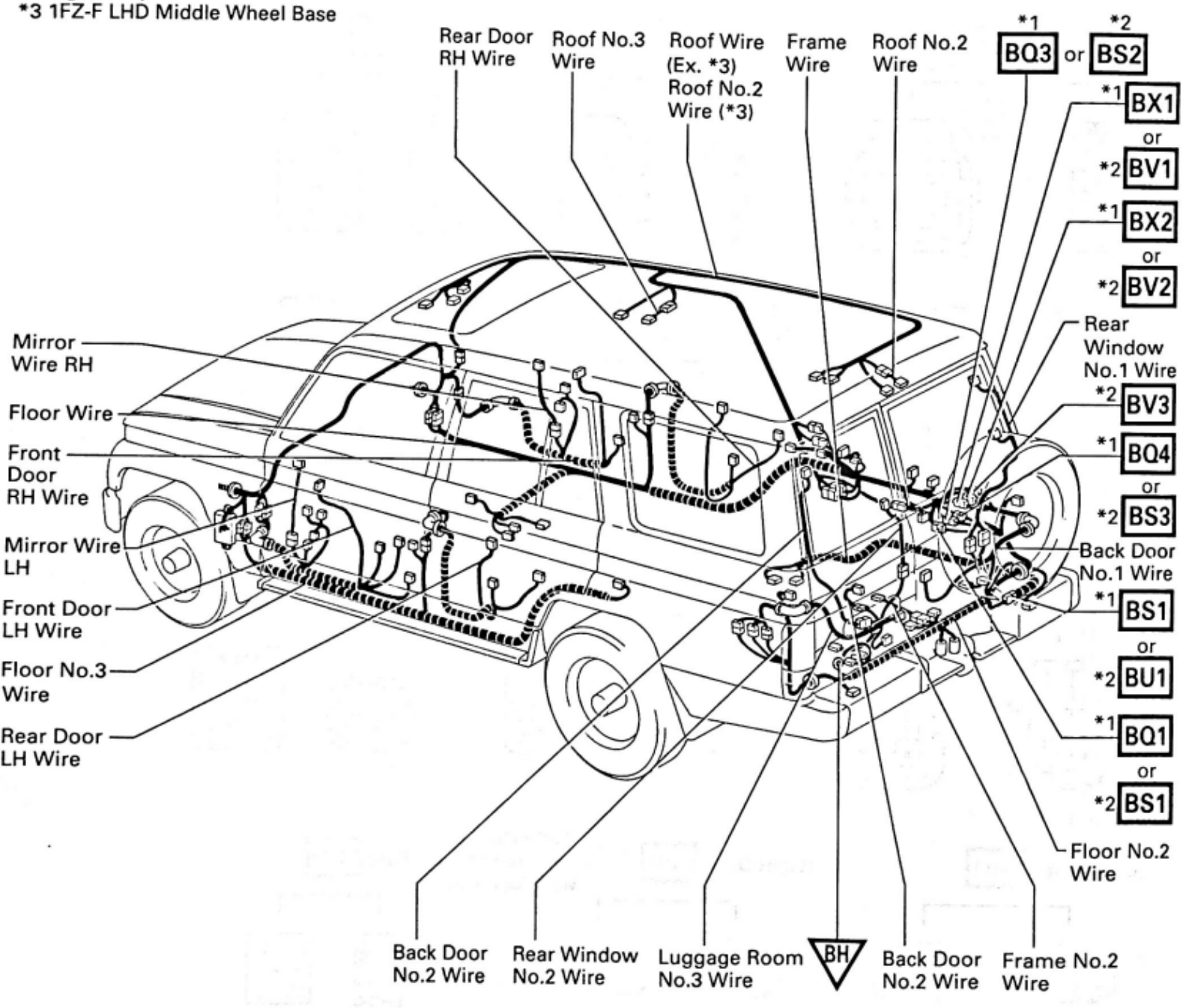

Connector Joining Wire Harness and Wire Harness

(Heavy Duty) BQ1

(Heavy Duty) BQ3

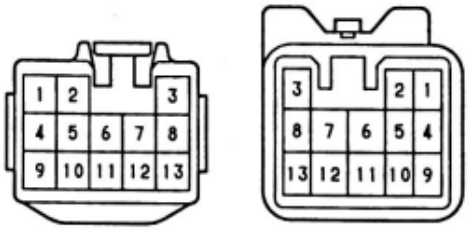

(Heavy Duty) BQ4

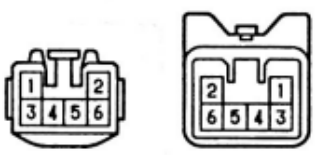

(Heavy Duty) BS1 BLACK

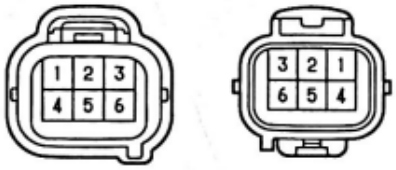

(Light Duty) BS1

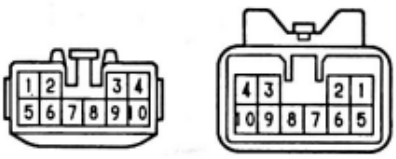

(Light Duty) BS2

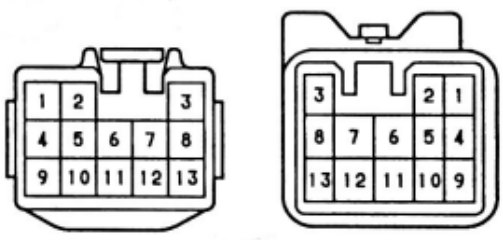

(Light Duty) BS3

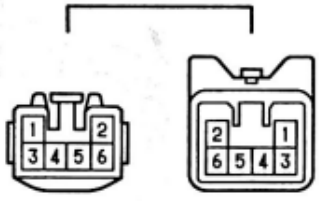

(Light Duty) BU1 BLACK

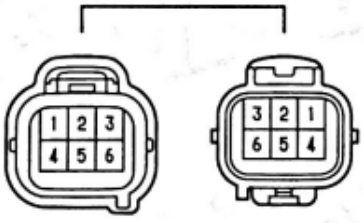

(Light Duty) BV1

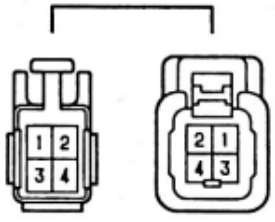

(Light Duty) BV2

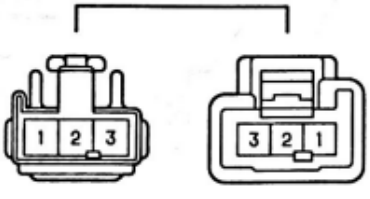

(Light Duty) BV3

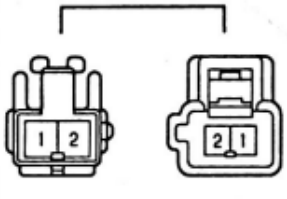

(Heavy Duty) BX1

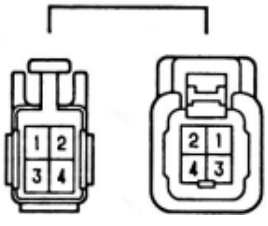

(Heavy Duty) BX2

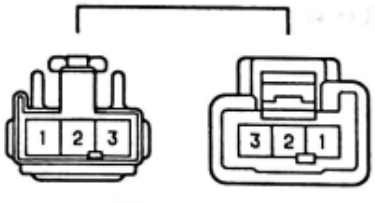

Position of Parts in Body

[LHD: Pick Up]

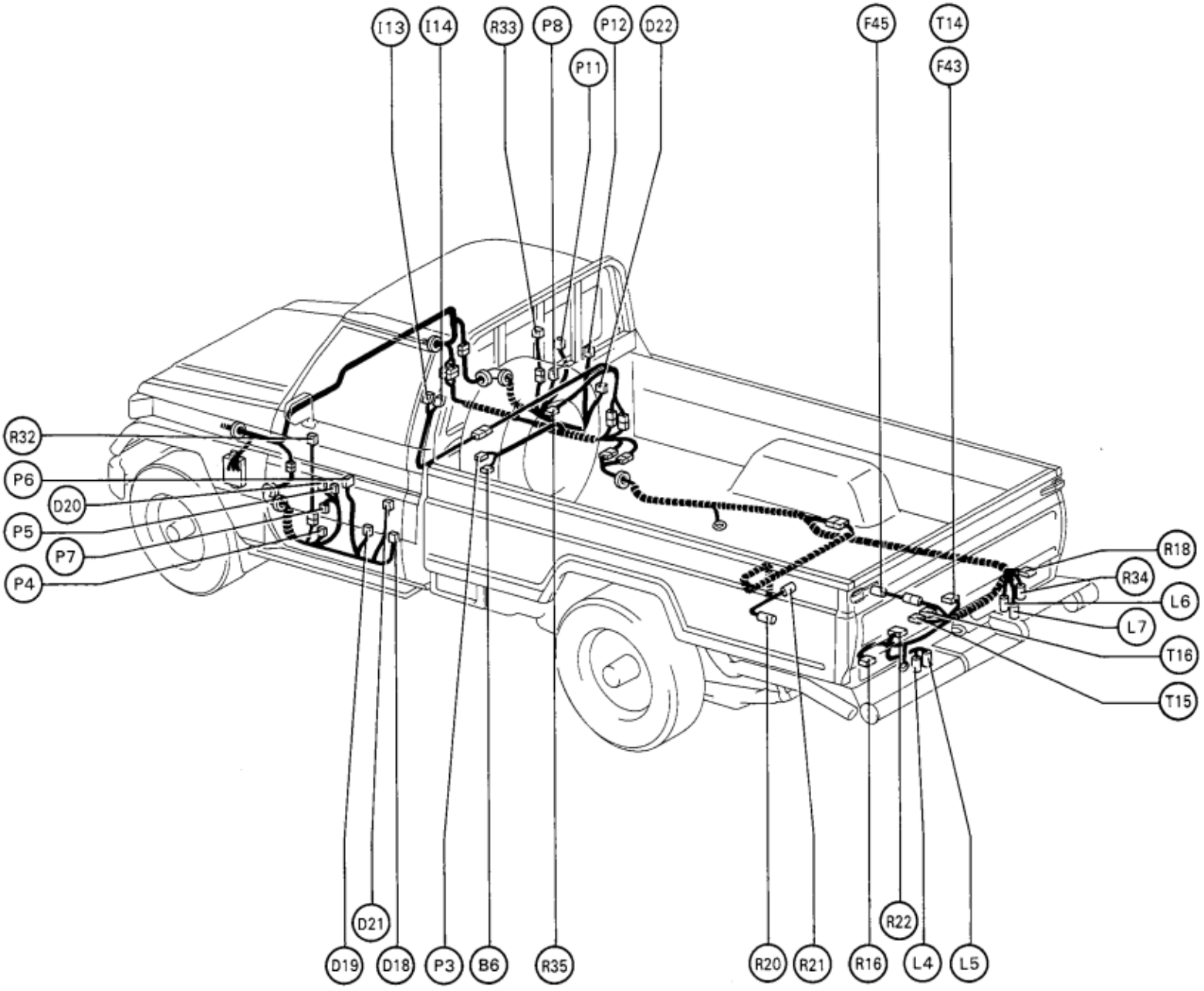

Position of Parts in Body

Code	English	*Français*	*Español*
B 6	Buckle SW	*Interrupteur de boucles de ceinture*	*Interruptor de la hebilla*
D 18	Door Key Lock and Unlock SW (Driver's)	*Verrouillage de clé de portière et contacteur de déverrouillage (du conducteur)*	*Interruptor de seguro y abierta de la llave de puerta (conductor)*
D 19	Door Lock Control Relay	*Relais de commande de verrouillage de portières*	*Relé de control de cierre de la puerta*
D 20	Door Lock Control SW	*Cont de commande de verrouillage de portière*	*Interruptor de control de cierre de la puerta*
D 21	Door Lock Motor (Driver's)	*Moteur de verrouillage de portière (du conducteur)*	*Motor de cierre de la puerta (conductor)*
D 22	Door Lock Motor (Passenger's)	*Moteur de verrouillage de portière (du passager)*	*Motor de cierre de la puerta (pasajero)*
F 43	Fuel Pump (22R-E)	*Pompe d'alimentation (22R–E)*	*Bomba de combustible (22R–E)*
F 45	Fuel Sender	*Sonde de niveau de carburant*	*Transmisor de combustible*
I 13	Interior Light Front (+)	*Eclairage d'avant d'habitacle (+)*	*Luz interior, delantera (+)*
I 14	Interior Light Front (–)	*Eclairage d'avant d'habitacle (–)*	*Luz interior, delantera (–)*
L 4	License Plate Light LH	*Eclairage de plaque d'immatriculation gauche*	*Luz de placa de matrícula izquierda*
L 5	License Plate Light LH	*Eclairage de plaque d'immatriculation gauche*	*Luz de placa de matrícula izquierda*
L 6	License Plate Light RH	*Eclairage de plaque d'immatriculation droite*	*Luz de placa de matrícula derecha*
L 7	License Plate Light RH	*Eclairage de plaque d'immatriculation droite*	*Luz de placa de matrícula derecha*
P 3	Parking Brake SW	*Contacteur de frein de stationnement*	*Interruptor del freno de estacionamiento*
P 4	Power Window Control Relay	*Relais de vitre à commande électrique*	*Relé de control de ventanilla automática*
P 5	Power Window Master SW (Door Trim Type)	*Contacteur principal de vitre à commande électrique (Type à garniture intérieure de porte)*	*Interruptor principal de la ventanilla automática (Tipo guarnición de puerta)*
P 6	Power Window Master SW (Arm Rest Type)	*Contacteur principal de vitre à commande électrique (Type à accoudoir)*	*Interruptor principal de la ventanilla automática (Tipo apoyabrazos)*
P 7	Power Window Motor (Driver's)	*Moteur de vitre à commande électrique (du conducteur)*	*Motor de la ventanilla automática (conductor)*
P 8	Power Window Motor (Passenger's)	*Moteur de vitre à commande électrique (du passager)*	*Motor de la ventanilla automática (pasajero)*
P 11	Power Window SW (Passenger's)(Door Trim Type)	*Contacteur de vitre à commande électrique (du passager)(Type à garniture intérieure de porte)*	*Interruptor de la ventanilla automática (pasajero)(Tipo guarnición de puerta)*
P 12	Power Window SW (Passenger's)(Arm Rest Type)	*Contacteur de vitre à commande électrique (du passager)(Type à accoudoir)*	*Interruptor de la ventanilla automática (pasajero)(Tipo apoyabrazos)*
R 16	Rear Combination Light LH	*Dispositif d'éclairage arrière combiné gauche*	*Luces combinadas traseras, izquierda*
R 18	Rear Combination Light RH	*Dispositif d'éclairage arrière combiné droite*	*Luces combinadas traseras, derecha*
R 20	Rear Diff. Lock Motor	*Moteur de verrouillage de différentiel arrière*	*Motor de bloqueo de diferencial trasero*
R 21	Rear Diff. Lock SW	*Contacteur de verrouillage de différentiel arrière*	*Interruptor de bloqueo de diferencial trasero*
R 22	Rear Fog Light	*Feux anti-brouillard arrière*	*Luz de los faros antiniebla traseros*
R 32	Remote Control Mirror LH	*Miroir à télécommande gauche*	*Espejo retrovisor con control remoto, izquierda*
R 33	Remote Control Mirror RH	*Miroir à télécommande droite*	*Espejo retrovisor con control remoto, derecha*
R 34	Reverse Warning Buzzer	*Répétiteur sonore de marche arrière*	*Advertencia de marcha atrás del zumbador*
R 35	Room Temp. Sensor No. 2	*Capteur no. 2 de température ambiante d'habitacle*	*Sensor de la temperatura interior N.° 2*
T 14	Trailer Socket	*Douille de remorque*	*Receptáculo para remolque*
T 15	Trailer Socket	*Douille de remorque*	*Receptáculo para remolque*
T 16	Trailer Socket	*Douille de remorque*	*Receptáculo para remolque*

E ELECTRICAL WIRING ROUTING

▭ : Location of Connector Joining Wire Harness and Wire Harness
▽ : Location of Ground Points

[LHD: Pick Up]

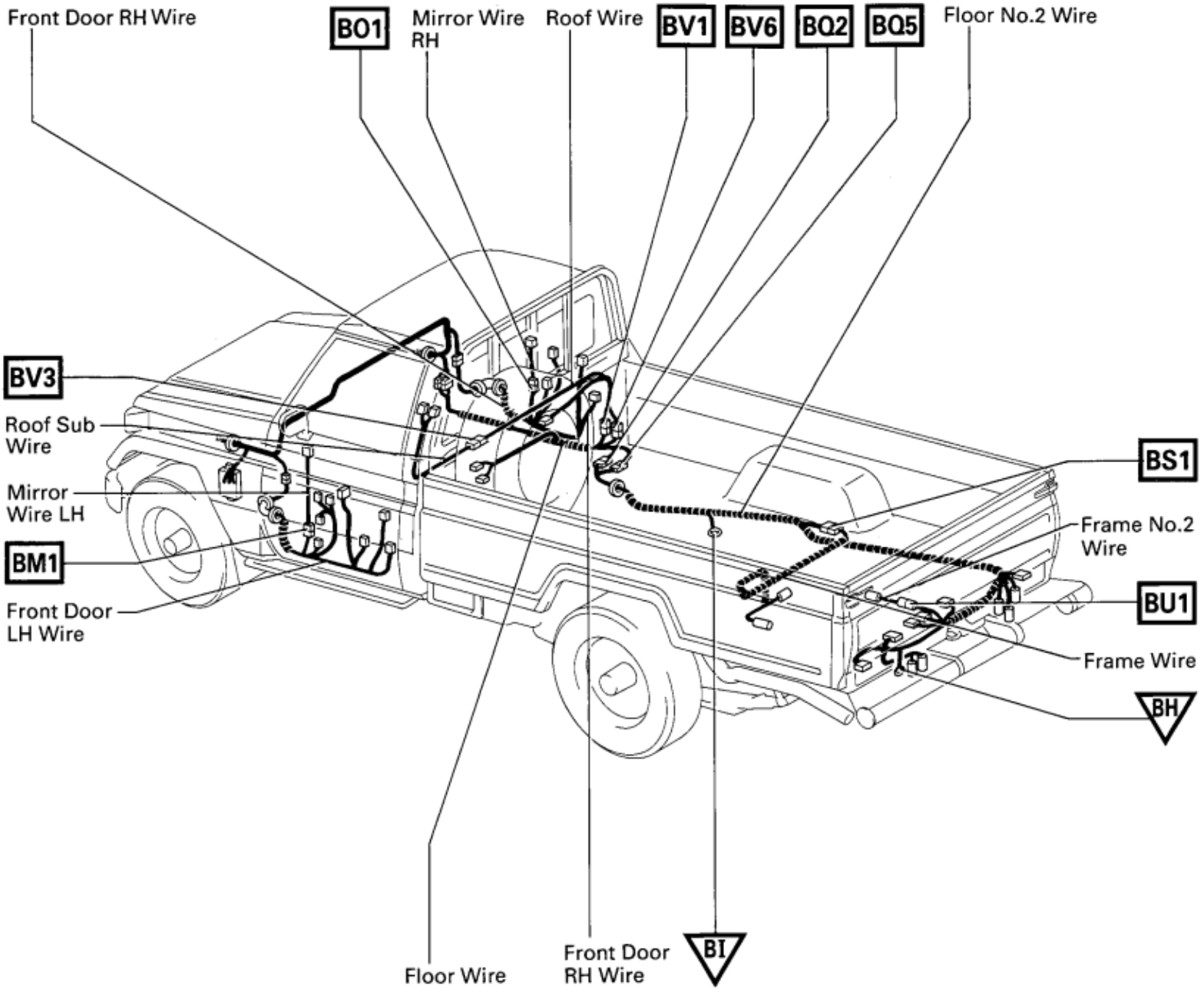

Connector Joining Wire Harness and Wire Harness

BM1

BO1

BQ2 DARK GRAY

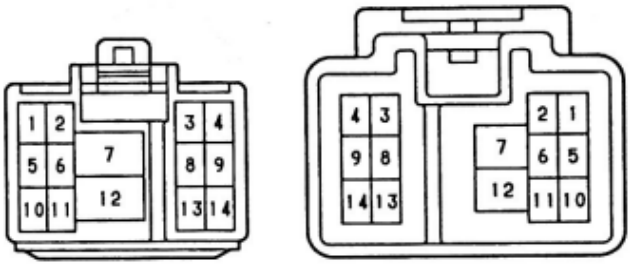

BQ5 GRAY

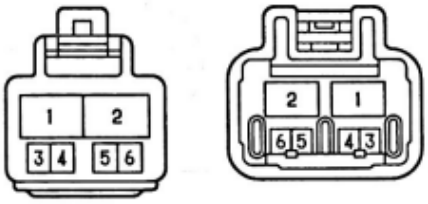

BS1 BLACK

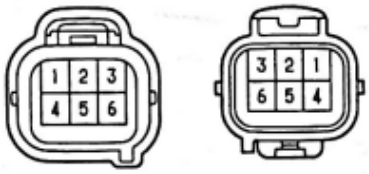

BU1 BLACK

BV1 DARK GRAY

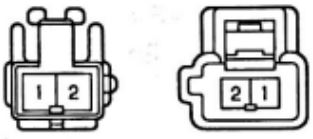

BV3

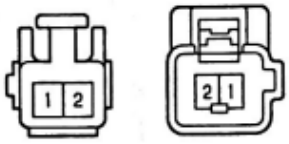

BV6 GRAY

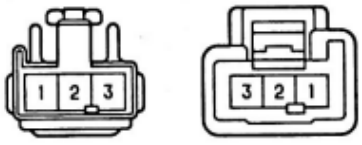

F CONNECTOR LIST

A 1
GRAY

A 2
GRAY

A 3
GRAY

A 4
(RHD) BLACK

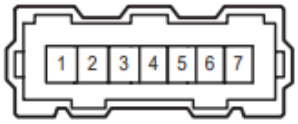

A 4
(LHD) BLACK

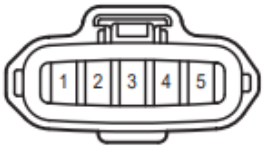

A 5

A 6

A 7

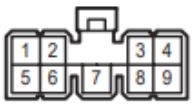

A 8

A 9
BLACK

A10

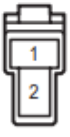

A11
GRAY

A12

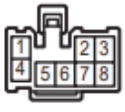

A13

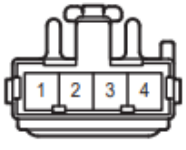

A14

A15

B 1
(1HZ) GRAY

B 1
(Except 1HZ) GRAY

B 2
(Except Colombia) GRAY

B 2
(Colombia) GRAY

B 3
BLUE

B 5

B 6
BLACK

B 7
GRAY

C 8

C 9

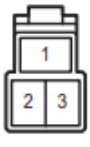

C10
GRAY

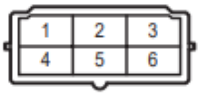

C11

C12
GRAY

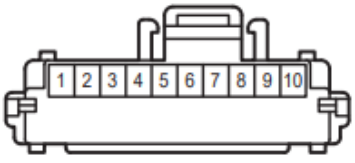

C13
BLUE

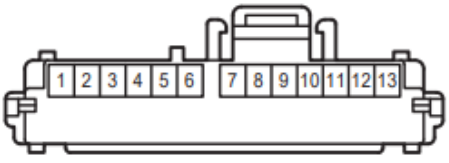

C14
BROWN

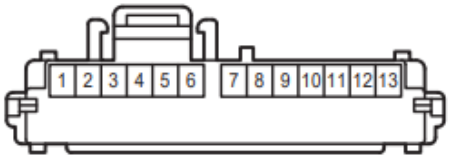

C15
BLACK

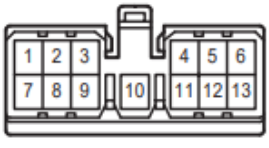

C16
BLACK

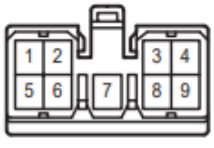

C17

C18

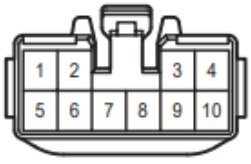

C19
GRAY

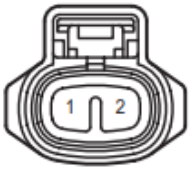

C20
GRAY

C21
BLACK

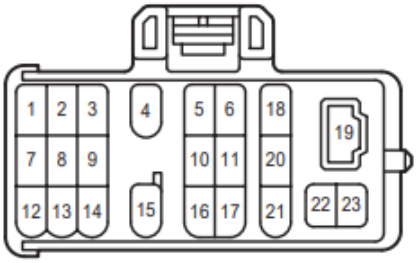

C22
GRAY

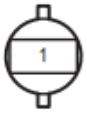

C23
DARK GRAY

D 1

D 2
BLUE

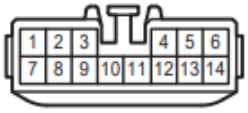

D 3

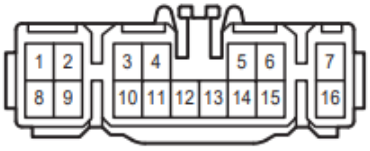

D 5
(Except Colombia)

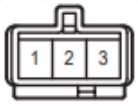

D 5
(Colombia) BLACK

D 8
BROWN

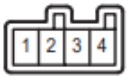

D 9
BLACK

D10
ORANGE

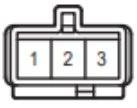

D12

D13

D14

D15

D18

D19

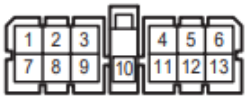

D20

D21

D22

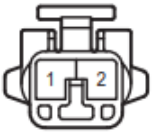

D26
BROWN

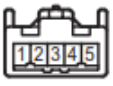

E 1
BLACK

E 2
DARK GRAY

E 6
(1FZ–FE) GRAY

E 6
(1HZ) GRAY

E 9
(1FZ–F) DARK GRAY

E 9
(1HZ) DARK GRAY

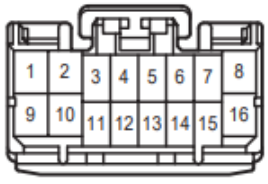

E10
(1FZ–F) DARK GRAY

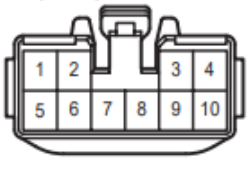

E10
(1HZ) DARK GRAY

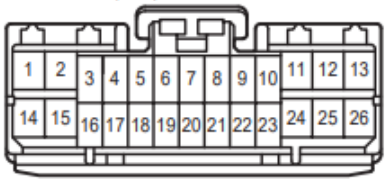

E11
DARK GRAY

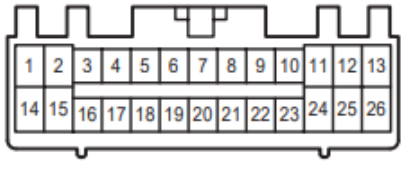

E12
DARK GRAY

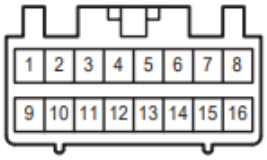

E13
DARK GRAY

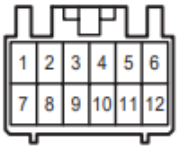

E15

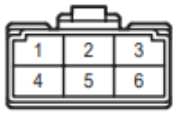

E16
DARK GRAY

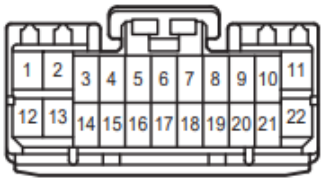

F 6
GRAY

F CONNECTOR LIST

F 7
GRAY

F 8
GRAY

F 9
GRAY

F14
GRAY

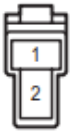

F15
GRAY

F19
GRAY

F20

F21
GRAY

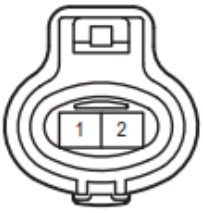

F27

F28
BLACK

F33
BLACK

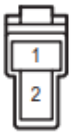

F34
BLACK

F36

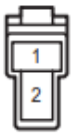

F37

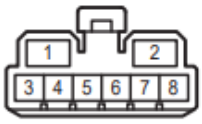

F38
GRAY

F40

F42

(See Page 24)

F43
GRAY

F44
DARK GRAY

F45
GRAY

F46
GRAY

F47

F48
GRAY

F49
GRAY

F50
GRAY

F51
GRAY

F52
BLACK

F53
DARK GRAY

F54
DARK GRAY

F55
DARK GRAY

F56
GRAY

F57
BLACK

F58

F59
BLACK

F60
DARK GRAY

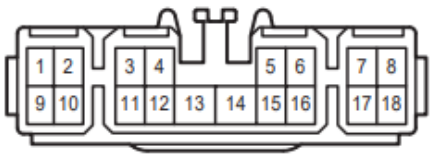

F61
GRAY

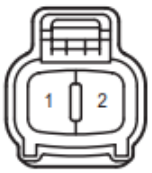

F62
DARK GRAY

F63
BLACK

G 1

G 2

G 5

G 6
GRAY

G10

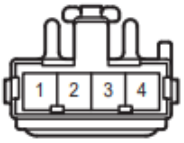

H 1
GRAY

H 2
GRAY

H 3
GRAY

H 4
BLACK

H 5
BLACK

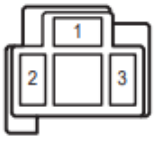

H 6
BLACK

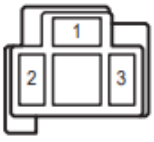

H 7
BLACK

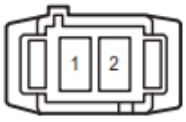

H 8
BLACK

H 9
BLACK

H10
BLACK

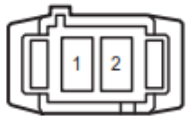

H11
BLACK

H12
BLACK

H16

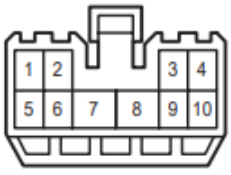

H17

H18

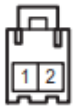

H21

H22
DARK GRAY

H23

I 1
(1FZ–FE) BLACK

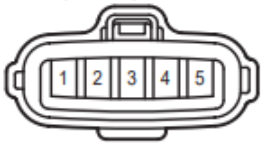

I 1
(1FZ–F) DARK GRAY

I 2
BLACK

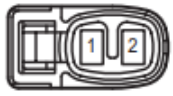

I 4
GRAY

I 5
BROWN

I 6
GRAY

I 7
BROWN

I11
BLACK

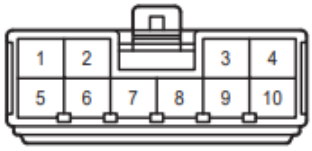

I15

I19
GRAY

I20
BROWN

I21
DARK GRAY

I22

I23

I24

I25

J 1
BLACK

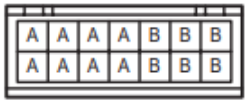

F CONNECTOR LIST

J 2
BLACK

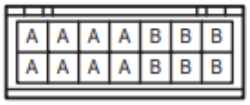

J 3
BLUE

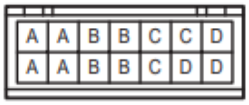

K 1
DARK GRAY

K 2
DARK GRAY

L 2

L 3

L 4
GRAY

L 5
GRAY

L 6
GRAY

L 7
GRAY

M 2

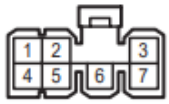

M 3

M 5

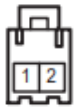

M 7

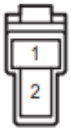

N 2
GRAY

N 4
BLACK

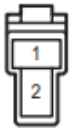

N 5

O 1

O 2

O 3

P 2
(Super Glow Type)

P 2
(Fixed Delay Type)

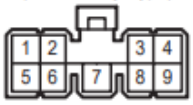

P 3

P 5
BLUE

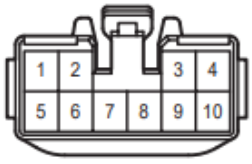

P 7

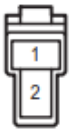

P 8

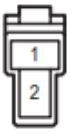

P11

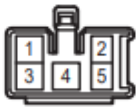

P12

P15
GRAY

P16

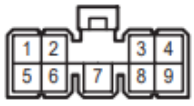

R 1

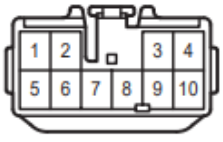

R 2

R 3

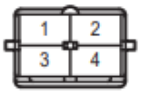

R 5
(Except Europe)

R 5
(Europe) BLACK

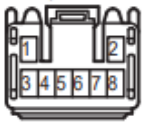

R 7

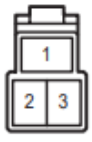

R 8

R12

R13

R15

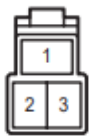

R16

R17
GRAY

R18

R19
GRAY

R23

R24

R25
BLACK

R26
BLACK

R27
BLACK

R28
BLACK

R29

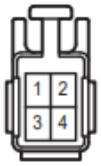

R31

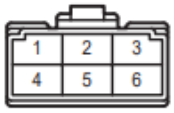

R36
BLACK

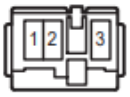

R37

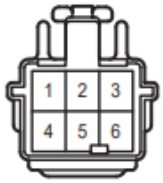

R38
GRAY

R39

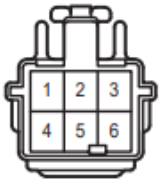

R40
GRAY

R41
GRAY

R42

R43
GRAY

S 2
(1HZ) BLACK

S 2
(Except 1HZ) BLACK

S 3

S 4
BLACK

S 6

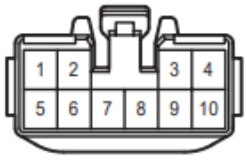

S 7

S 8

S11

S12

S14
BLACK

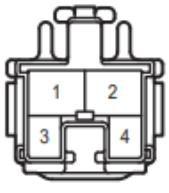

S16

S17
GRAY

S18
GRAY

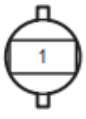

S19
GRAY

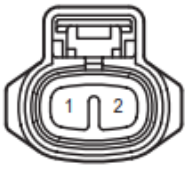

S20

S21

T 2
GRAY

T 4
GRAY

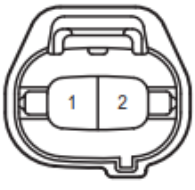

T 5
GRAY

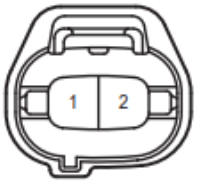

T12

T14
BLACK

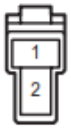

T15
BLACK

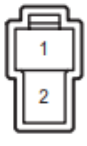

T16
BLACK

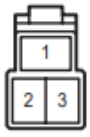

T17
GRAY

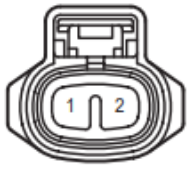

T18
GRAY

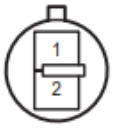

T19
GRAY

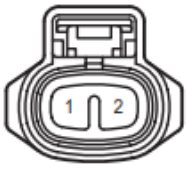

T20
GRAY

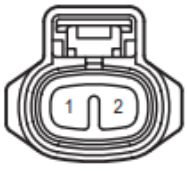

T21
BLACK

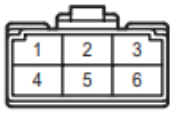

V 1
GRAY

V 4
BLACK

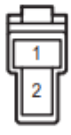

F CONNECTOR LIST

V 6
DARK GRAY

V10
GRAY

V13
BLACK

V14
BROWN

V15
GRAY

V16
GRAY

V17
GRAY

V18
BLACK

W 1
GRAY

W 2
GREEN

W 4

W 5
GRAY

W 6

W 7
GRAY

W 8

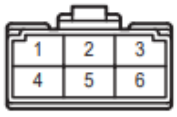

W 9

W10
GREEN

W11
GREEN

W12
DARK GRAY

H PART NUMBER OF CONNECTORS

Code	Part Name	Part Number
A 1	A/C Magnetic Clutch	90980–11271
A 2	A/C Water Temp. SW	–
A 3	Air Cleaner Warning SW	90980–11025
A 5	Alternator (1FZ–FE, 1HZ RHD)	90980–09187
	Alternator (1HZ Except RHD)	90980–09201
A 6	Alternator	90980–11349
A 7	A/C Amplifier	90980–10045
A 8	A/C Cut Relay (Water Temp.)	90980–10142
A 9	A/C Dual Pressure SW	90980–10216
A10	A/C Thermistor	90980–10214
B 1	Back–Up Light SW (1FZ–FE)	90980–11051
	Back–Up Light SW (1HZ)	90980–11250
B 2	Brake Fluid Level SW	90980–11207
B 3	Back Door Courtesy SW	–
B 5	Back Door Lock Motor	
B 6	Buckle SW	90980–10906
B 7	Back Buzzer	90980–10887
C 9	Cigarette Lighter	90980–10216
C10	Circuit Opening Relay	90980–10224
C11	Clock	90980–10171
C12	Combination Meter	90980–11113
C13	Combination Meter	90980–11114
C14	Combination Meter	90980–11115
C15	Combination SW	90980–11478
C16	Combination SW	90980–11479
C17	Center Diff. Lock Control Motor	90980–11024
C18	Center Diff. Lock Control Relay	90980–10801
C19	Center Diff. Lock Indicator SW	90980–11250
C20	Center Diff. Lock Indicator SW	90980–10243
C21	Check Connector	–
C24	Camshaft Position Sensor	90980–10947
C25	Crankshaft Position Sensor	90980–11016
D 2	Daytime Running Light Relay or Short Connector	90980–10807
D 3	Diff. Lock ECU	90980–10848
D 9	Diode (Light Reminder)	90980–10962
D10	Diode (Rear Fog Light)	90980–11071
D12	Door Courtesy SW Front LH	90980–10433
D14	Door Courtesy SW Front LH	
D15	Door Courtesy SW Front RH	
D18	Door Key Lock and Unlock SW (Driver's Side)	–
D19	Door Lock Control Relay	
D20	Door Lock Control SW	

Code	Part Name	Part Number
D21	Door Lock Motor (Driver's Side)	–
D22	Door Lock Motor (Front Passenger's Side)	
D26	Diff. Lock Control SW	90980–10631
D27	Detection SW (Transfer Neutral Position)	90980–10247
D28	Diode (Seat Belt Warning) (1FZ–FE)	90980–10962
	Diode (Seat Belt Warning) (1HZ)	90980–11608
D29	DLC3	90980–11665
E 1	EFI Main Relay	90980–11139
E 2	EFI Water Temp. Sensor	90980–10737
E 6	Engine Oil Level Sensor (1FZ–FE RHD)	90980–11235
	Engine Oil Level Sensor (1HZ)	90980–10532
E 9	Emission ECU	90980–11391
E10	Emission ECU	90980–11390
E11	Engine ECU	
E12	Engine ECU	90980–11391
E16	Engine ECU	90980–11392
F 6	Front Fog Light LH	–
F 7	Front Fog Light RH	
F 8	Front Side Turn Signal Light LH	90980–11142
F 9	Front Side Turn Signal Light RH	
F14	Front Washer Motor	90980–10214
F15	Front Wiper Motor	90980–11194
F19	Fuel Cut Solenoid and Pick–Up Sensor	90980–11157
F21	Fuel Heater	90980–10928
F27	Fusible Link Box	99141–12006
F33	Front Blower Motor	90980–10214
F34	Front Blower Resistor	90980–10171
F36	Front Fog Light SW	90980–10214
F37	Front Heater Blower SW	90980–10209
F38	Front Wiper Relay	90980–10799
F42	Fuse Block No.1	82610–60070
F43	Fuel Pump	90980–11142
F44	Fuel Sender (Front)	90980–11016
F46	Front Diff. Lock Control Motor	90980–11194
F47	Front Diff. Lock Position SW	90980–11250
F48	Front Turn Signal Light and Clearance Light LH	90980–11016
F49	Front Turn Signal Light and Clearance Light RH	
F50	Fuel Cut Solenoid and Crankshaft Position Sensor	90980–11157
F52	Fuel Pump Relay	90980–10939
F53	Fuel Pump Resistor	90980–10581

Code	Part Name	Part Number
F54	Fuel Solenoid Valve 1	90980–10901
F55	Fuel Solenoid Valve 2	
F57	Fusible Link Box	90980–10122
F58	Fusible Link Box	99141–12005
F59	Fusible Link Box	90980–10114
F61	Fuel Pump (Sub)	90980–11142
F63	Fuel Sender (Rear) (Long Body Type, Pick–Up Body Type)	90980–10500
	Fuel Sender (Rear) (Short Body Type, Middle Body Type)	90980–11293
F64	Fuel Pump Select Relay	90980–10173
F65	Fuel Sediment SW 1	90980–11003
F66	Fuel Sediment SW 2	
F67	Fuel Tank Changeover SW	90980–10797
G 1	Glow Plug	99141–13004
G 2	Glow Plug Relay (Main)	90980–11569
H 1	Headlight Beam Level Control Actuator LH	90980–10891
H 2	Headlight Beam Level Control Actuator RH	
H 3	Headlight Cleaner Motor	90980–10157
H 4	Headlight Cleaner Relay	90980–10550
H 5	Headlight LH	99149–53030
H 6	Headlight RH	
H 7	Horn (High)	90980–10092
H 8	Horn (High)	90980–10786
H 9	Horn (High)	
H10	Horn (Low)	90980–10092
H11	Horn (Low)	90980–10786
H12	Horn (Low)	
H16	Headlight Beam Level Control SW	–
H17	Headlight Cleaner SW	90980–10362
H18	Heater Illumination	90980–10039
H21	High Mounted Stop Light	–
I 4	Injector No.1	90980–11153
I 5	Injector No.2	
I 6	Injector No.3	
I 7	Injector No.4	
I11	Ignition SW	90980–10862
I15	Interior Light Front	–
I19	Injector No.5	90980–11153
I20	Injector No.6	
I21	ISC Valve	90980–11145
I22	Interior Light Front	90980–10183
I23	Interior Light Front	90980–10182

Code	Part Name	Part Number
I24	Interior Light Rear	–
I25	Interior Light Rear	
I26	Ignition Coil and Igniter No.1	90980–11150
I27	Ignition Coil and Igniter No.2	
I28	Ignition Coil and Igniter No.3	
I29	Intake Air Temp. Sensor	90980–11163
J 1	Junction Connector No.1	82670–14030
J 2	Junction Connector No.2	
J 3	Junction Connector No.3	
J 4	Junction Connector No.4	90980–10803
K 1	Knock Sensor 1	90980–11166
K 2	Knock Sensor 2	
L 2	Light Reminder Relay	90980–10171
L 3	License Plate Light	–
L 4	License Plate Light LH	90980–11142
L 5	License Plate Light RH	
L 6	License Plate Light LH	
L 7	License Plate Light RH	
M 2	Moon Roof Control Relay	90980–10043
M 3	Moon Roof Control SW and Personal Light	–
M 5	Moon Roof Limit SW	
M 7	Moon Roof Motor	
N 2	Noise Filter (Ignition)	90980–10843
N 5	No.1 Instrument Cluster Illumination	90980–10906
O 1	Oil Pressure Sender (1FZ–FE)	90980–11363
	Oil Pressure Sender (1HZ)	90980–10703
P 2	Pre–Heating Timer	90980–10803
P 3	Parking Brake SW	90980–10871
P 5	Power Window Master SW	–
P 7	Power Window Motor (Driver's Side)	
P 8	Power Window Motor (Front Passenger's Side)	
P11	Power Window SW (Front Passenger's Side)	
P12	Power Window SW (Front Passenger's Side)	
P15	Power Outlet	90980–10990
P16	Power Window Control Relay	–
R 1	Radio and Player	90980–10997
R 2	Radio and Player	90980–10996
R 3	Rear Fog Light Relay	90980–10221
R 5	Rear Fog Light SW (Europe)	90980–11533
	Rear Fog Light SW (General)	90980–10601

H PART NUMBER OF CONNECTORS

Code	Part Name	Part Number
R 7	Rear Window Defogger SW	90980–10216
R 8	Rear Wiper and Washer SW	90980–10127
R15	Rear Blower Motor and Resistor	90980–10216
R16	Rear Combination Light LH	90980–11296
R17	Rear Combination Light LH	90980–10988
R18	Rear Combination Light RH	90980–11296
R19	Rear Combination Light RH	90980–10988
R23	Rear Heater Blower SW	90980–10171
R24	Rear Washer Motor	90980–10214
R25	Rear Window Defogger	–
R26	Rear Window Defogger	
R27	Rear Window Defogger	
R28	Rear Window Defogger	
R29	Rear Wiper Motor	
R31	Rear Wiper Relay	90980–10173
R36	Rheostat	90980–10490
R37	Rear Combination Light LH	90980–11001
R38	Rear Combination Light LH	90980–10942
R39	Rear Combination Light RH	90980–11001
R40	Rear Combination Light RH	90980–10942
R41	Rear Diff. Lock Position SW	90980–11250
R42	Rear Diff. Lock Control Motor	90980–11290
R43	Rear Fog Light	90980–10887
R44	Remote Control Mirror SW	90980–10043
R45	Remote Control Mirror LH	–
R46	Remote Control Mirror RH	
R47	Rear Combination Light LH	90980–11013
R48	Rear Combination Light RH	
S 2	Starter (1FZ–FE)	90980–11400
	Starter (1HZ)	90980–11184
S 3	Starter	90980–09507
S 4	Starter Relay	90980–11139
S 6	Seat Belt Warning Relay	90980–10801
S11	Speaker Front LH	90980–10298
S12	Speaker Front RH	
S14	Stop Light SW	90980–11118
S16	Speaker Rear LH	–
S17	Speaker Rear RH	
S22	Speed Sensor (Combination Meter)	90980–11143
S23	Sub Fuel Pump Forcing Driving Relay	90980–10221
T 2	Throttle Position Sensor	90980–11261
	Throttle Position Sensor (1HZ)	90980–11016
T 4	Transfer Control Solenoid (2WD)	90980–11149
T 5	Transfer Control Solenoid (4WD)	90980–11156

Code	Part Name	Part Number
T12	Transfer Control SW	90980–10041
T14	Trailer Socket	90980–10214
T15	Trailer Socket	90980–10213
T16	Trailer Socket	90980–10216
T17	Transfer L4 Position SW	90980–11250
T18	Transfer L4 Position SW	90980–10157
T21	Trailer Socket	90980–10173
V 1	Vacuum SW (Brake)	90980–11252
V 4	VSV (A/C Idle–Up)	90980–11156
V 6	E–VRV (EGR)	90980–11162
V13	Vacuum Sensor	90980–10845
V14	VSV (BACS)	90980–11156
V15	VSV (EGR Cut)	
V19	Variable Resistor	90980–10902
W 1	Water Temp. Sender	90980–11428
W 2	Water Temp. Sensor (Glow)	90980–10737
W 4	Winch Main Relay	–
W 5	Winch Main Relay	
W 6	Winch Main Relay	
W 7	Winch Motor and Magnetic SW	
W 8	Wiper Lock Relay	90980–10173
W 9	Wiper Lock SW	90980–10182
W10	Winch Motor and Magnetic SW	–
W11	Water Temp. Sensor (Emission Control)	90980–10737

TOYOTA LAND CRUISER ELECTRICAL WIRING DIAGRAM

	Location
	HEAVY-DUTY
ACCESSORY METER	11-3
AIR CONDITIONER, COOLER AND HEATER	8–6
BACK-UP LIGHT	5-3
CHARGING	2-1
CIGARETTE LIGHTER	9-1
CLOCK	9-1
COMBINATION METER	3-4
DOOR LOCK	7-7
EMISSION CONTROL (1FZ-F)	11-6
EMISSION CONTROL (22R)	
ENGINE CONTROL (1FZ-FE)	12-5
ENGINE CONTROL (22R-E)	
4WD	
4WD (Ex.Gasoline)	10-3
4WD (Gasoline)	11-8
FOG LIGHT	3-7
FRONT FOG LIGHT (General)	
FRONT WIPER AND WASHER	4-7
FUEL HEATER	1-8
FUEL HEATER (2L-T Europe)	
GLOW AND EMISSION CONTROL (2L-T Austria)	
GLOW (Europe, Australia)	1-5
GLOW (Ex. Europe, Australia)	1-7
GLOW PLUG (2L-T Ex. Austria)	
GLOW PLUG (3L)	
HEADLIGHT (Ex. Europe)	5-4
HEADLIGHT (Europe)	5-6
HEADLIGHT BEAM LEVEL CONTROL	
HEADLIGHT CLEANER	5-1
HORN	8-3
IGNITION	1-3
IGNITION (22R)	
IGNITION (22R-E)	
INTERIOR LIGHT	8-1
LIGHT REMINDER	3-8
MOON ROOF	7-1
POWER SOURCE	1-1, 12-1
POWER WINDOW	7-3
RADIO AND PLAYER	9-3
REAR FOG LIGHT	2-8
REAR WINDOW DEFOGGER	2-5
REAR WIPER AND WASHER	2-3
REMOTE CONTROL MIRROR	9-2
STARTING	1-2
STOP LIGHT	3-8
TAILLIGHT AND ILLUMINATION	4-3
TAILLIGHT AND ILLUMINATION (Ex. Europe)	
TAILLIGHT AND ILLUMINATION (Europe)	
THEFT DETERRENT SYSTEM (U.K)	
TRAILER SOCKET	2-6
TURN SIGNAL AND HAZARD WARNING LIGHT	6-3
UNLOCK AND SEAT BELT WARNING	2-6
WINCH	5-1

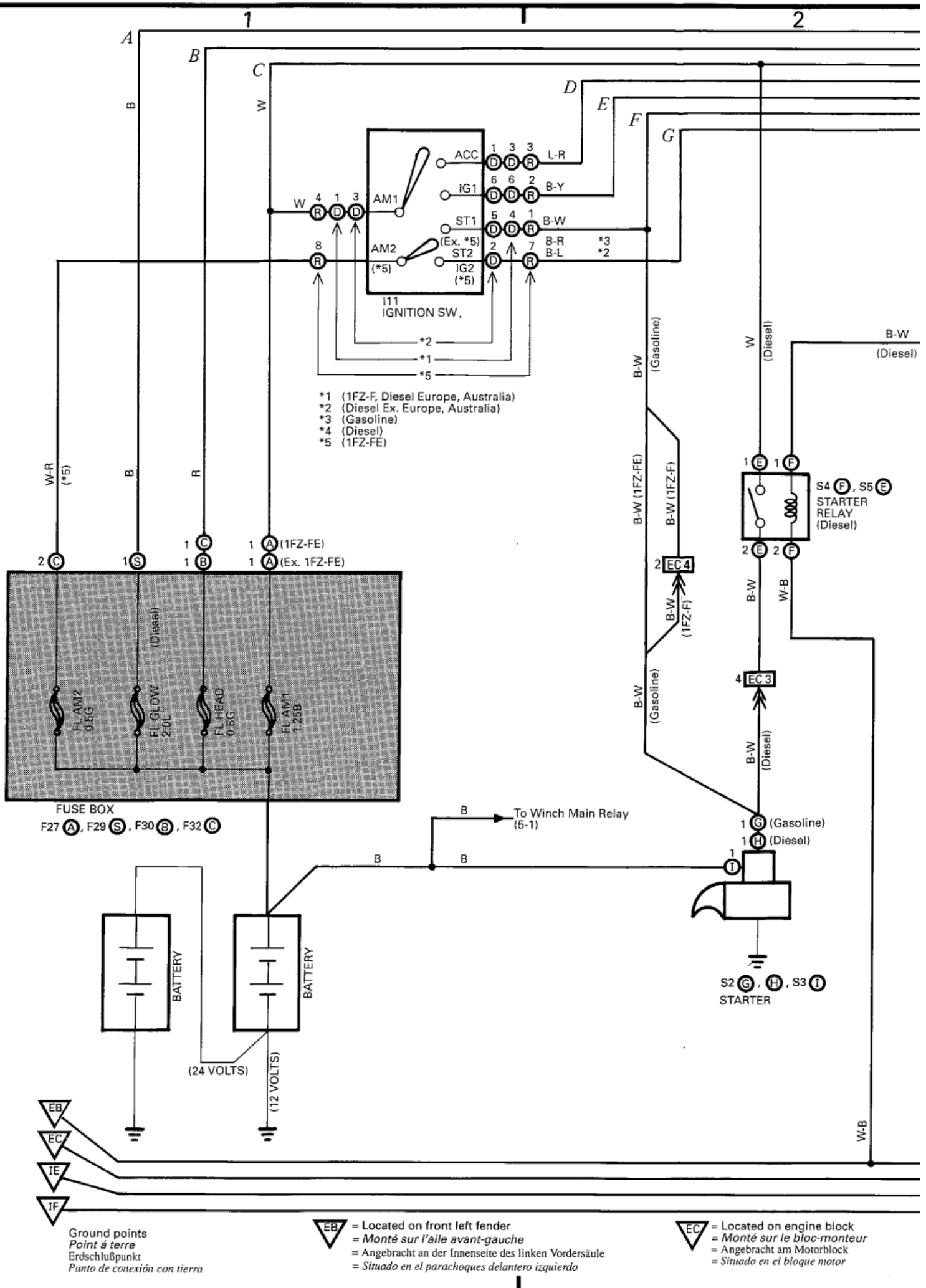

Ground points
Point á terre
Erdschlußpunkt
Punto de conexión con tierra

EB = Located on front left fender
= *Monté sur l'aile avant-gauche*
= Angebracht an der Innenseite des linken Vordersäule
= *Situado en el parachoques delantero izquierdo*

EC = Located on engine block
= *Monté sur le bloc-monteur*
= Angebracht am Motorblock
= *Situado en el bloque motor*

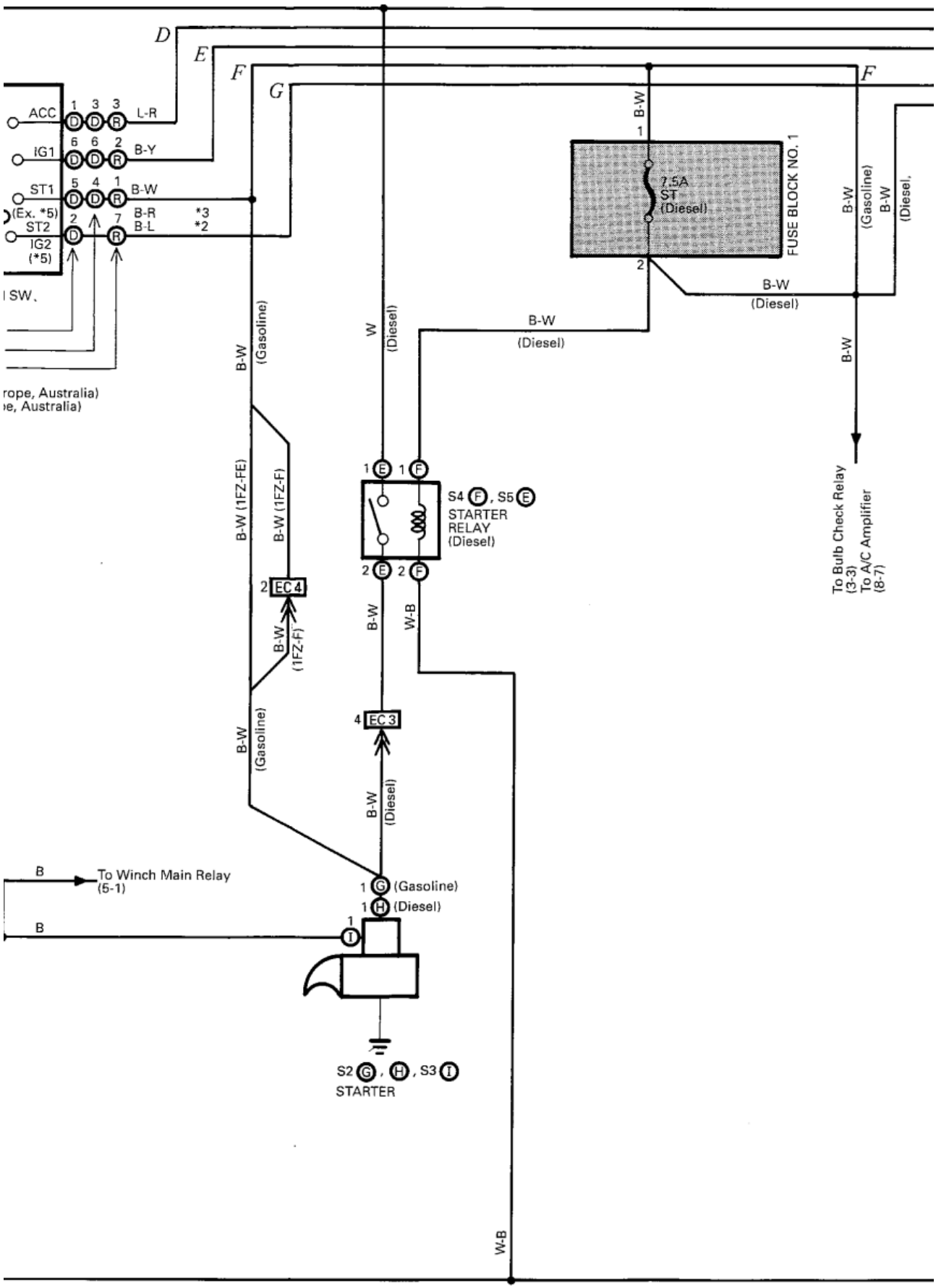

ont left fender
ile avant-gauche
der Innenseite des linken Vordersäule
arachoques delantero izquierdo

EC = Located on engine block
= Monté sur le bloc-monteur
= Angebracht am Motorblock
= Situado en el bloque motor

IE = Located on left kick panel
= Monté sur la partie gauche de tôle d'auver
= Angebracht an der Stirnwand, links seilich
= Situado en el lado izquierdo del carenaje

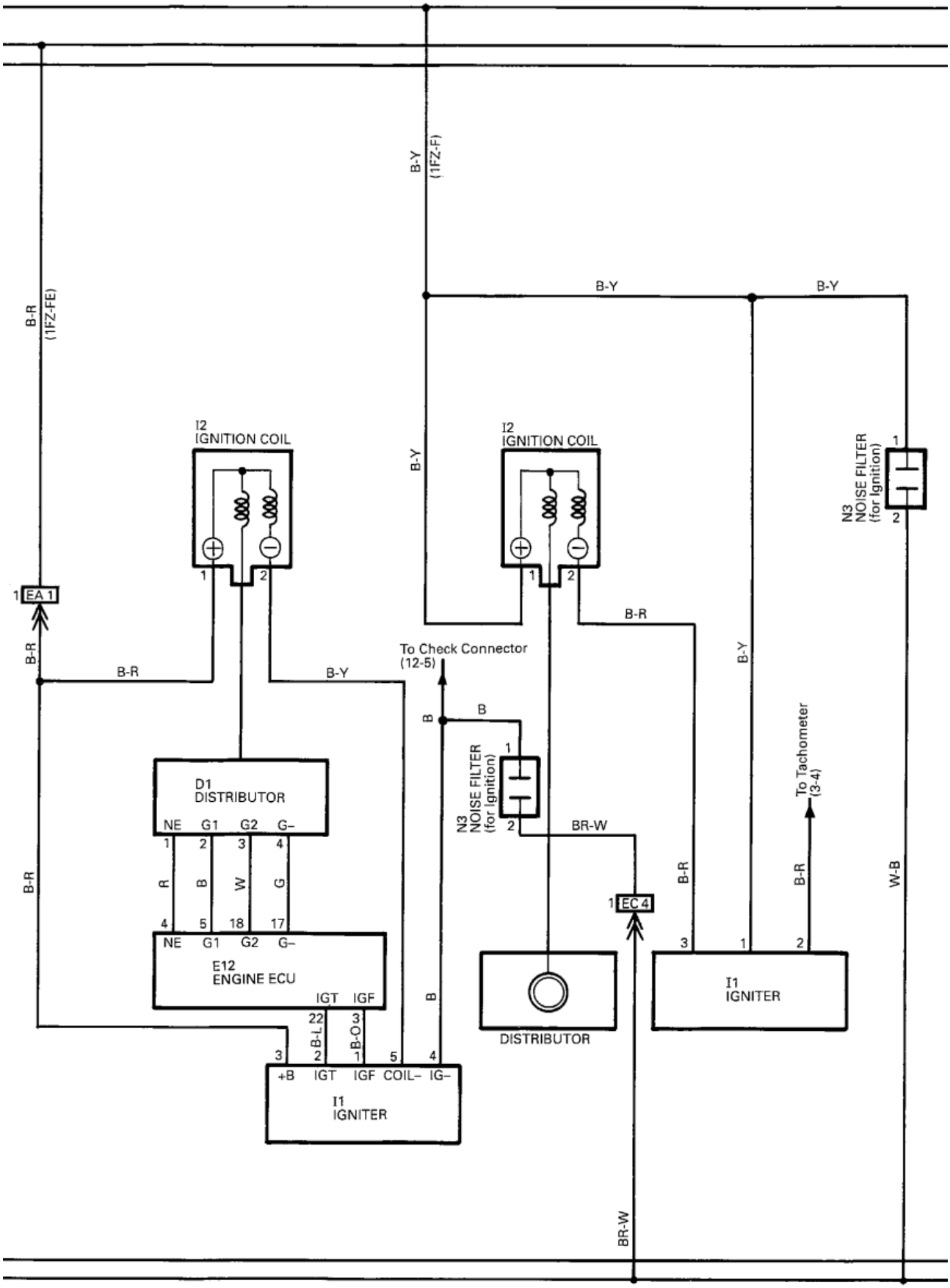

IF = Located on right kick panel
= *Monté sur la partie droite de tôle d'auvent*
= Angebracht an der Stirnwand, rechts seitlich
= *Situado en el lado derecho del carenaje*

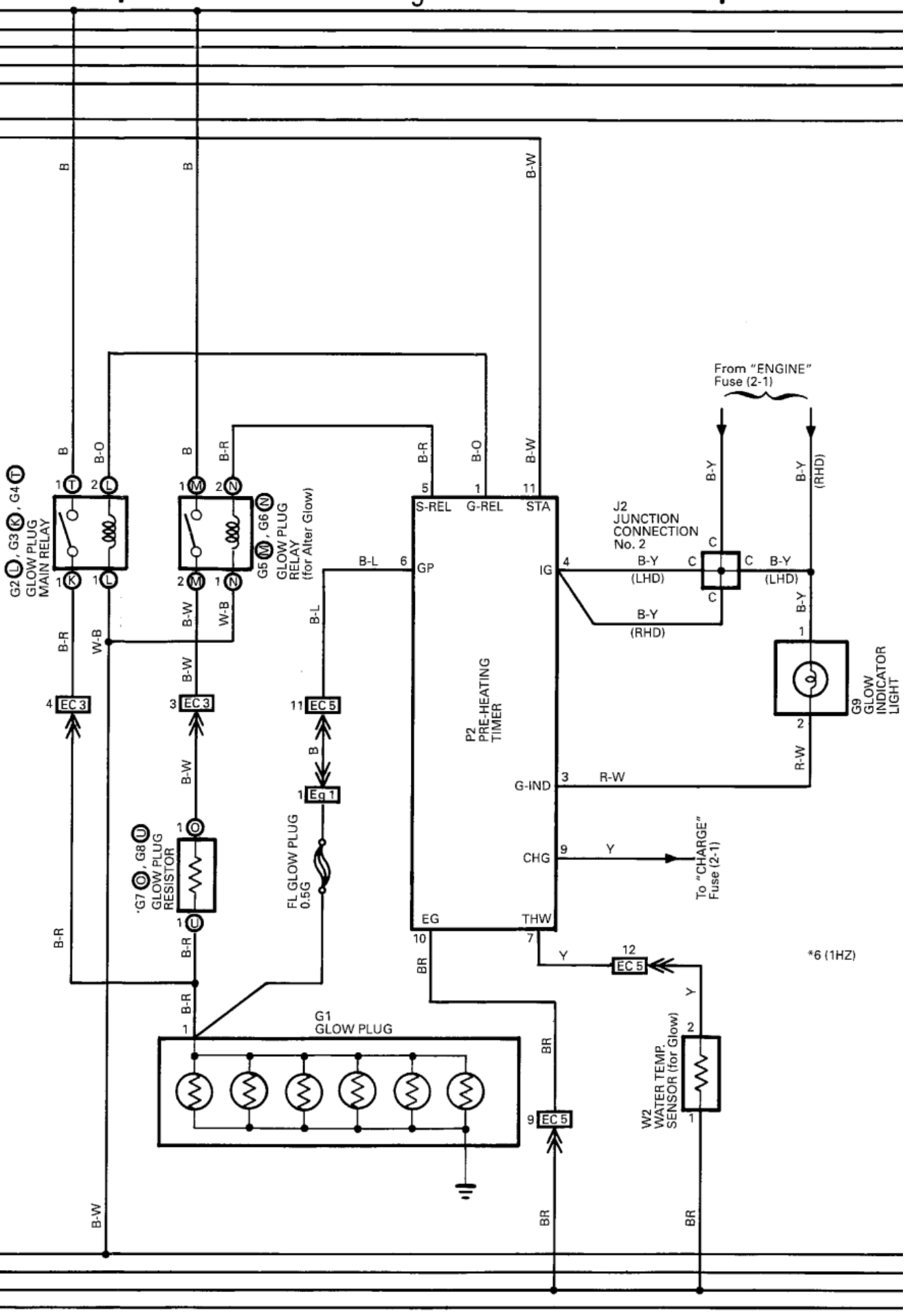
From "ENGINE" Fuse (2-1)
G2 (L), G3 (K), G4 (T) GLOW PLUG MAIN RELAY
G5 (M), G6 (N) GLOW PLUG RELAY (for After Glow)
J2 JUNCTION CONNECTION No. 2
P2 PRE-HEATING TIMER
S-REL
G-REL
STA
GP
IG
G-IND
CHG
EG
THW
G9 GLOW INDICATOR LIGHT
To "CHARGE" Fuse (2-1)
*G7 (O), G8 (U) GLOW PLUG RESISTOR
FL GLOW PLUG 0.5G
G1 GLOW PLUG
W2 WATER TEMP SENSOR (for Glow)
EC 3
EC 5
Eg 1
(LHD)
(RHD)
*6 (1HZ)

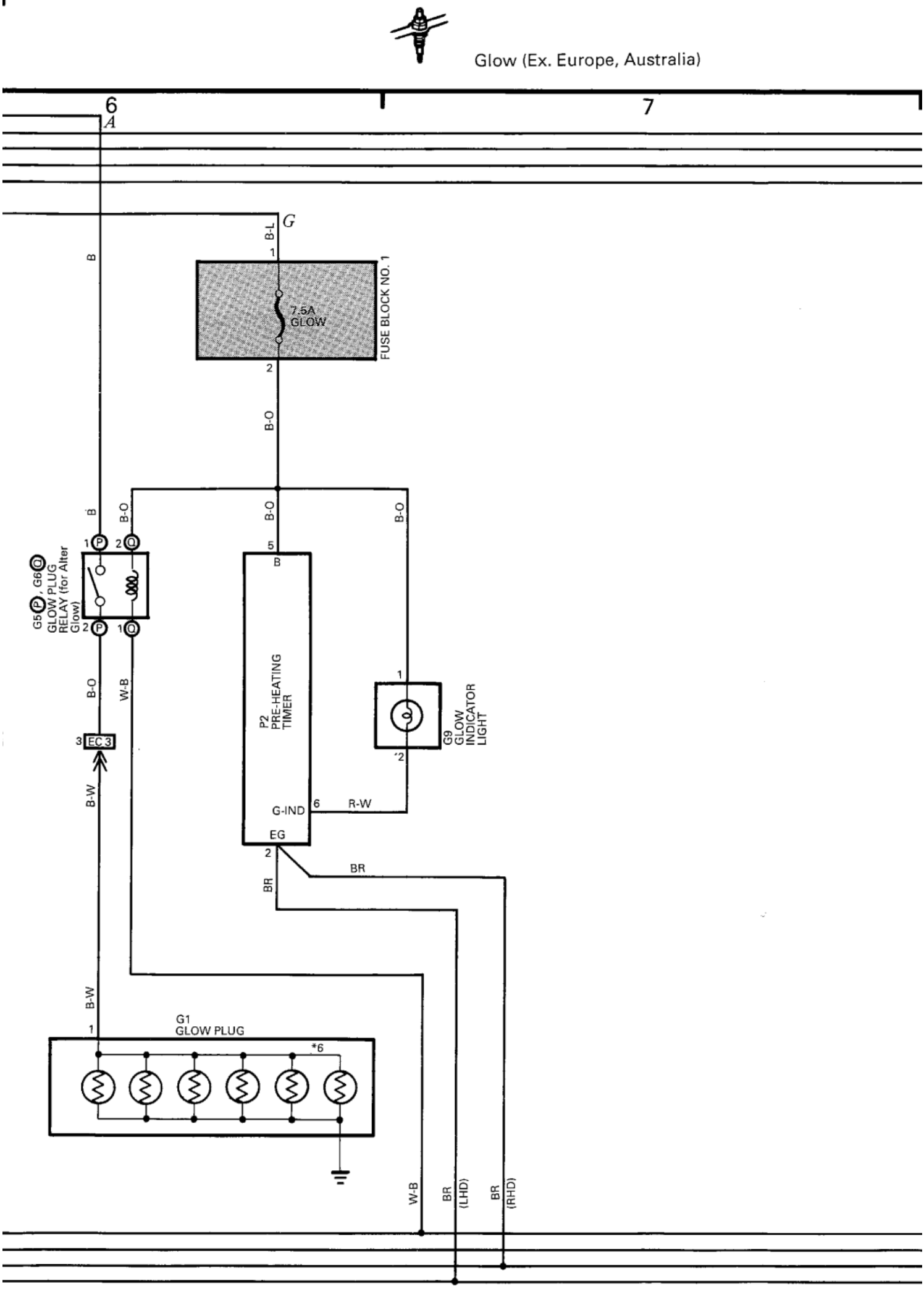
6
7
A
G
B
B-L
1
7.5A
GLOW
FUSE BLOCK NO. 1
2
B-O
B
B-O
B-O
1 P
2 O
5
B
G5 P, G6 O
GLOW PLUG
RELAY (for Alter
Glow)
2 P
1 O
B-O
W-B
3 EC3
B-W
P2
PRE-HEATING
TIMER
G-IND
6
R-W
EG
2
1
G9
GLOW
INDICATOR
LIGHT
*2
BR
BR
B-W
1
G1
GLOW PLUG
*6
W-B
BR
(LHD)
BR
(RHD)

8

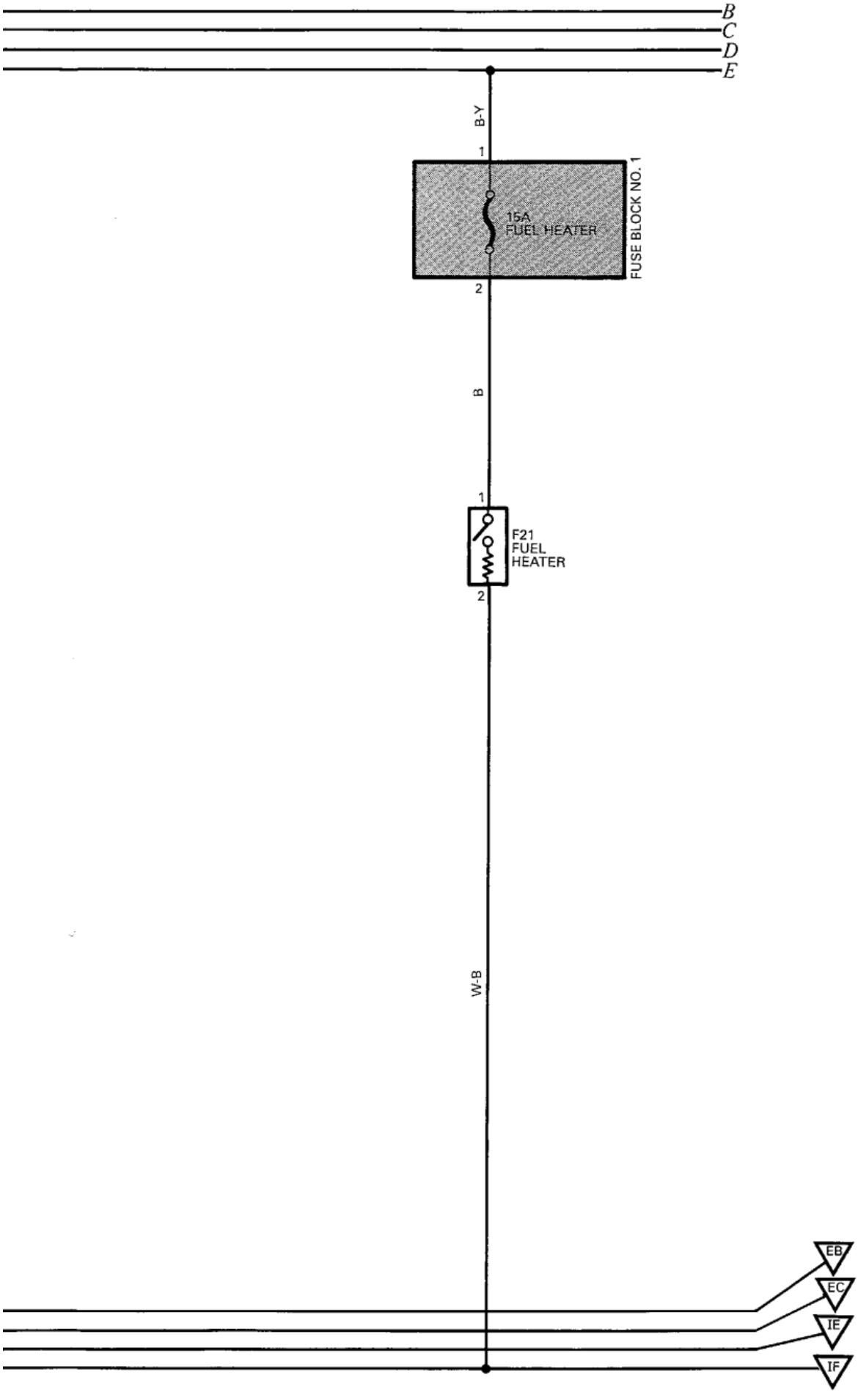
B
C
D
E
B-Y
1
15A
FUEL HEATER
FUSE BLOCK NO. 1
2
B
1
F21
FUEL
HEATER
2
W-B
EB
EC
IE
IF

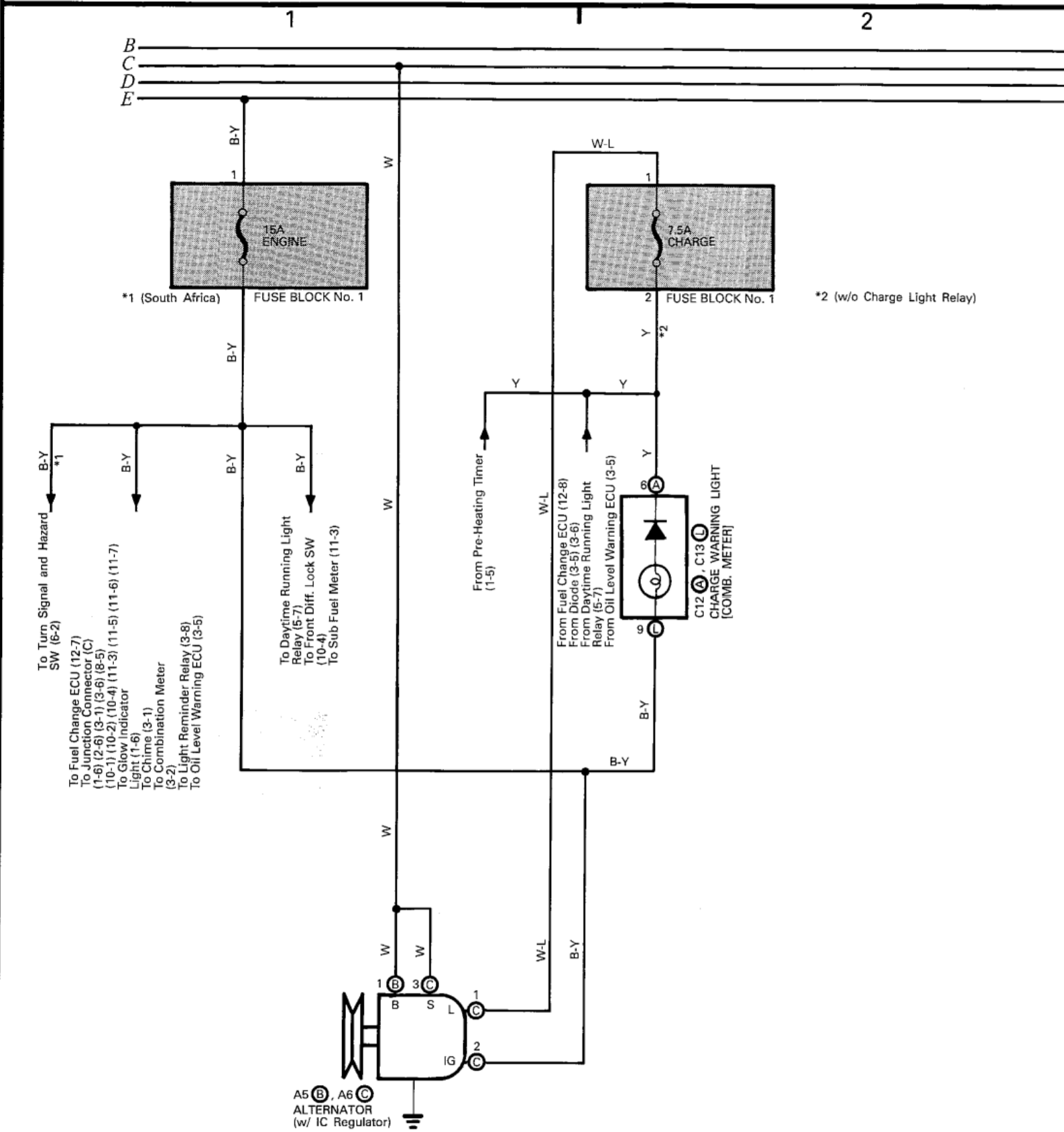

IE
IF
BH
BI

Ground points
Point à terre
Erdschlußpunkt
Punto de conexión con tierra

IE = Located on left kick panel
= *Monté sur la partie gauche de tôle d'auvent*
= Angebracht an der Stirnwand, links seilich
= *Situado en el lado izquierdo del carenaje*

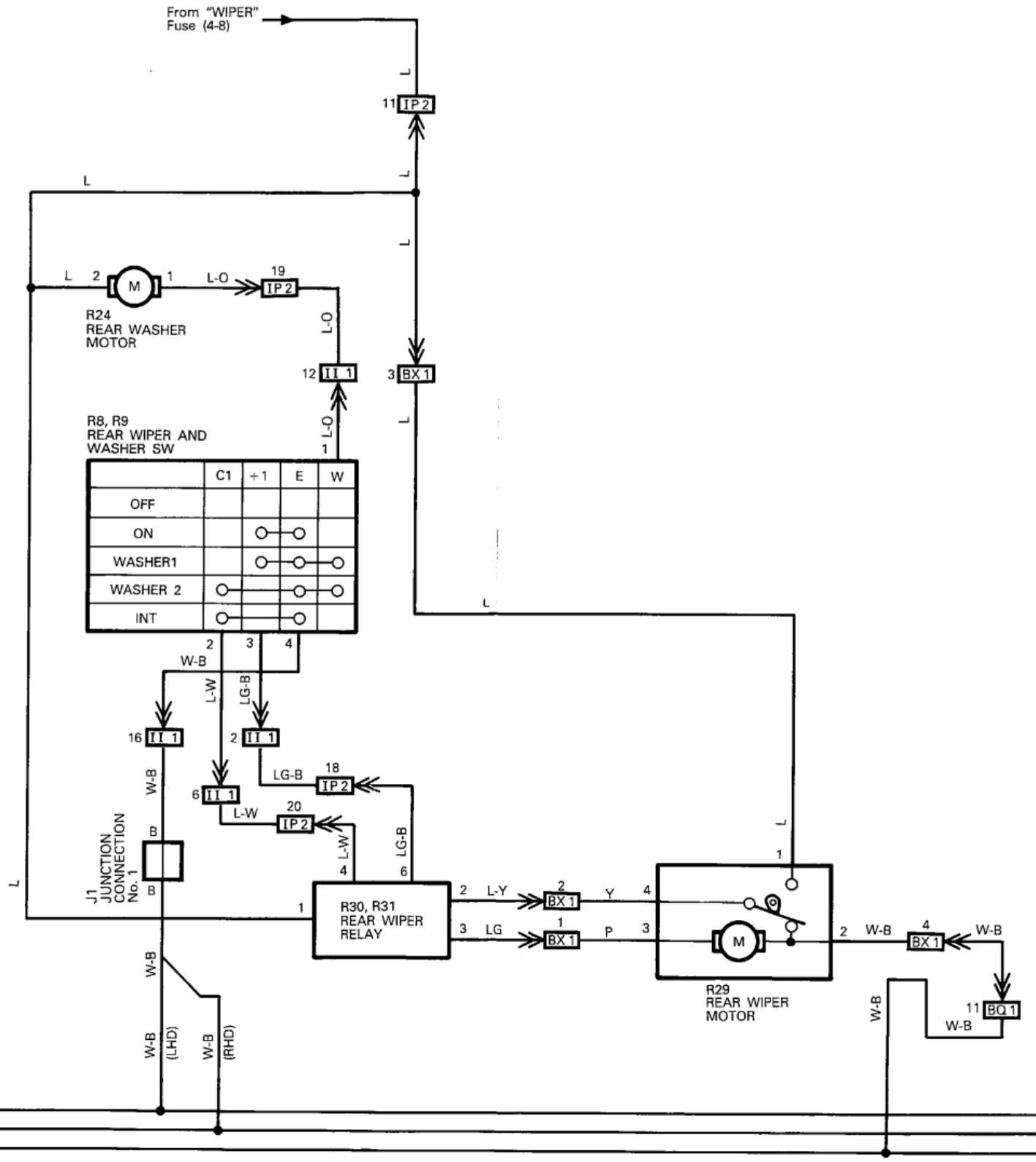

IF = Located on right kick panel
= *Monté sur la partie droite de tôle d'auvent*
= Angebracht an der Stirnwand, rechts seitlich
= *Situado en el lado derecho del carenaje*

BH = Located on back panel inner
= *Monté sur le panneau intérieur*
= Angebracht an der Innenseite der Hel
= *Situado en el panel interior de la pue*

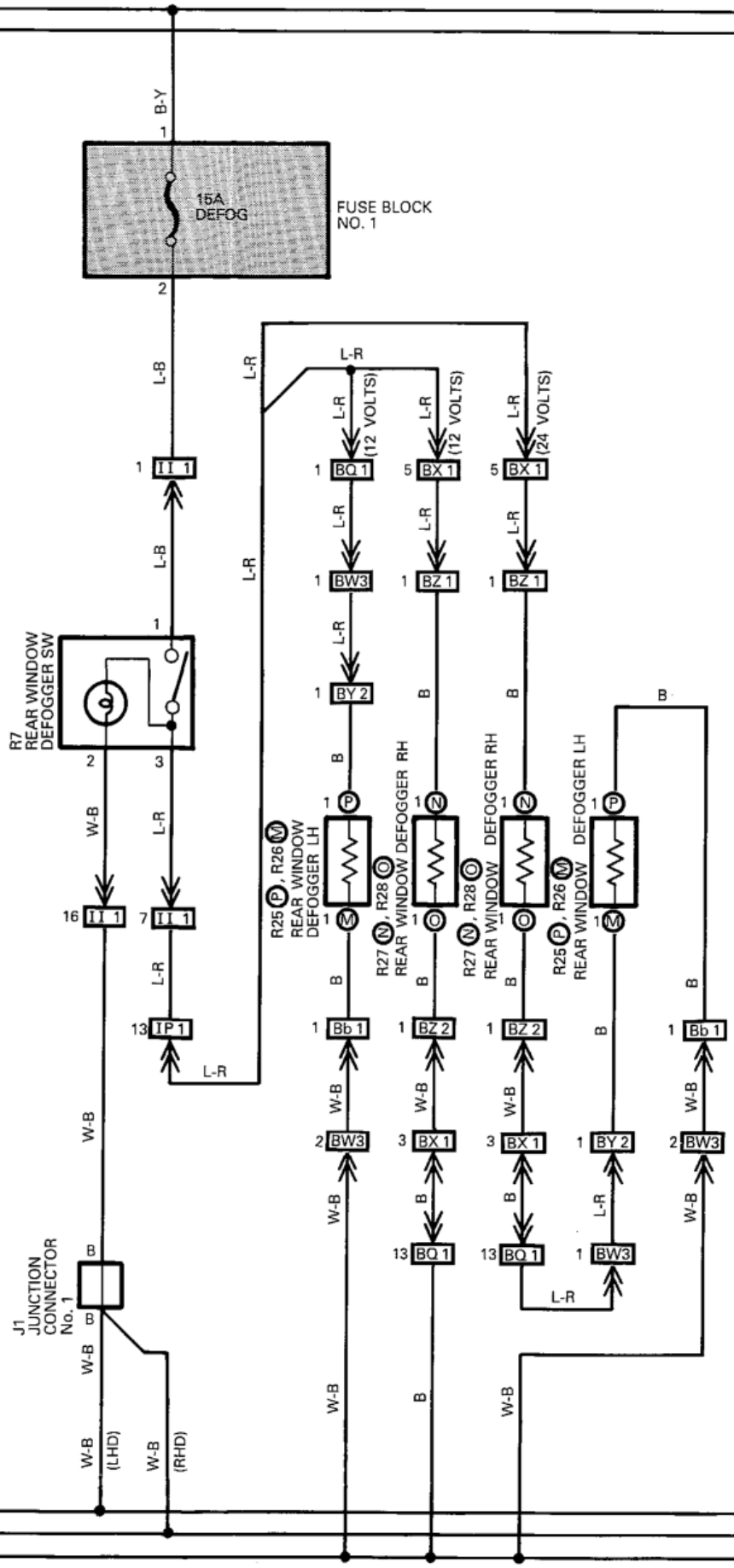

BT = Located on cross member frame
= *Monté sur la traverse*
= Angebracht am Querträgerrahmen
= *Situado en el marco del travesaño*

er
rieur de la porte arrière
er Hekklappe
la puerta trasera

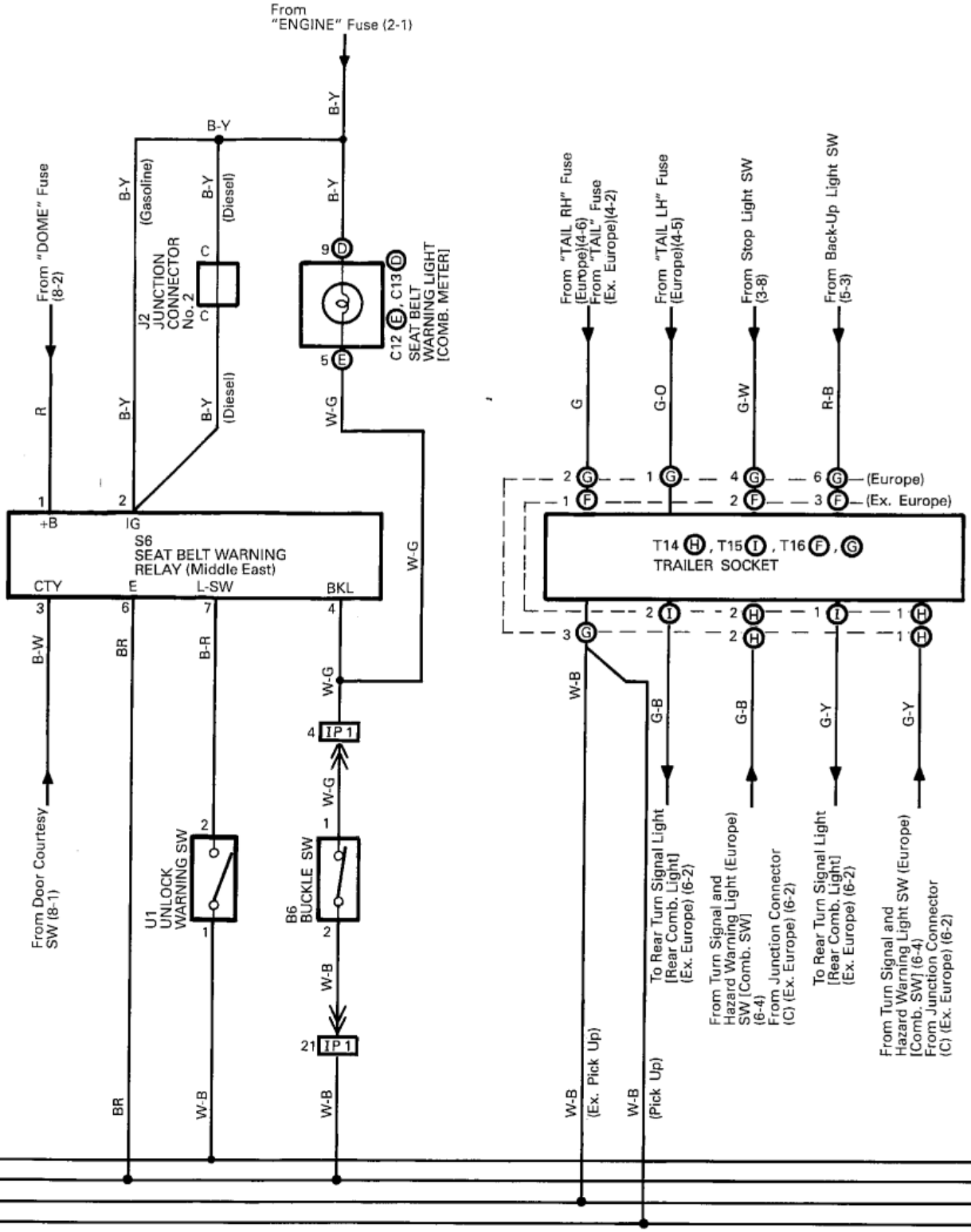
From "ENGINE" Fuse (2-1)
B-Y
From "DOME" Fuse (8-2)
R
B-Y (Gasoline)
B-Y (Diesel)
J2 JUNCTION CONNECTOR No. 2
C12 E, C13 D
SEAT BELT WARNING LIGHT [COMB. METER]
W-G
S6
SEAT BELT WARNING RELAY (Middle East)
+B
IG
CTY
E
L-SW
BKL
From Door Courtesy SW (8-1)
B-W
BR
B-R
U1 UNLOCK WARNING SW
B6 BUCKLE SW
TP1
W-B
From "TAIL RH" Fuse (Europe)(4-6) From "TAIL" Fuse (Ex. Europe)(4-2)
From "TAIL LH" Fuse (Europe)(4-5)
From Stop Light SW (3-8)
From Back-Up Light SW (5-3)
G
G-O
G-W
R-B
T14 H, T15 I, T16 F, G
TRAILER SOCKET
(Europe)
(Ex. Europe)
(Ex. Pick Up)
(Pick Up)
G-B
G-Y
To Rear Turn Signal Light [Rear Comb. Light] (Ex. Europe) (6-2)
From Turn Signal and Hazard Warning Light (Europe) SW [Comb. SW] (6-4)
From Junction Connector (C) (Ex. Europe) (6-2)
To Rear Turn Signal Light [Rear Comb. Light] (Ex. Europe) (6-2)
From Turn Signal and Hazard Warning Light SW (Europe) [Comb. SW] (6-4)
From Junction Connector (C) (Ex. Europe) (6-2)

7 8

B
C
D
E

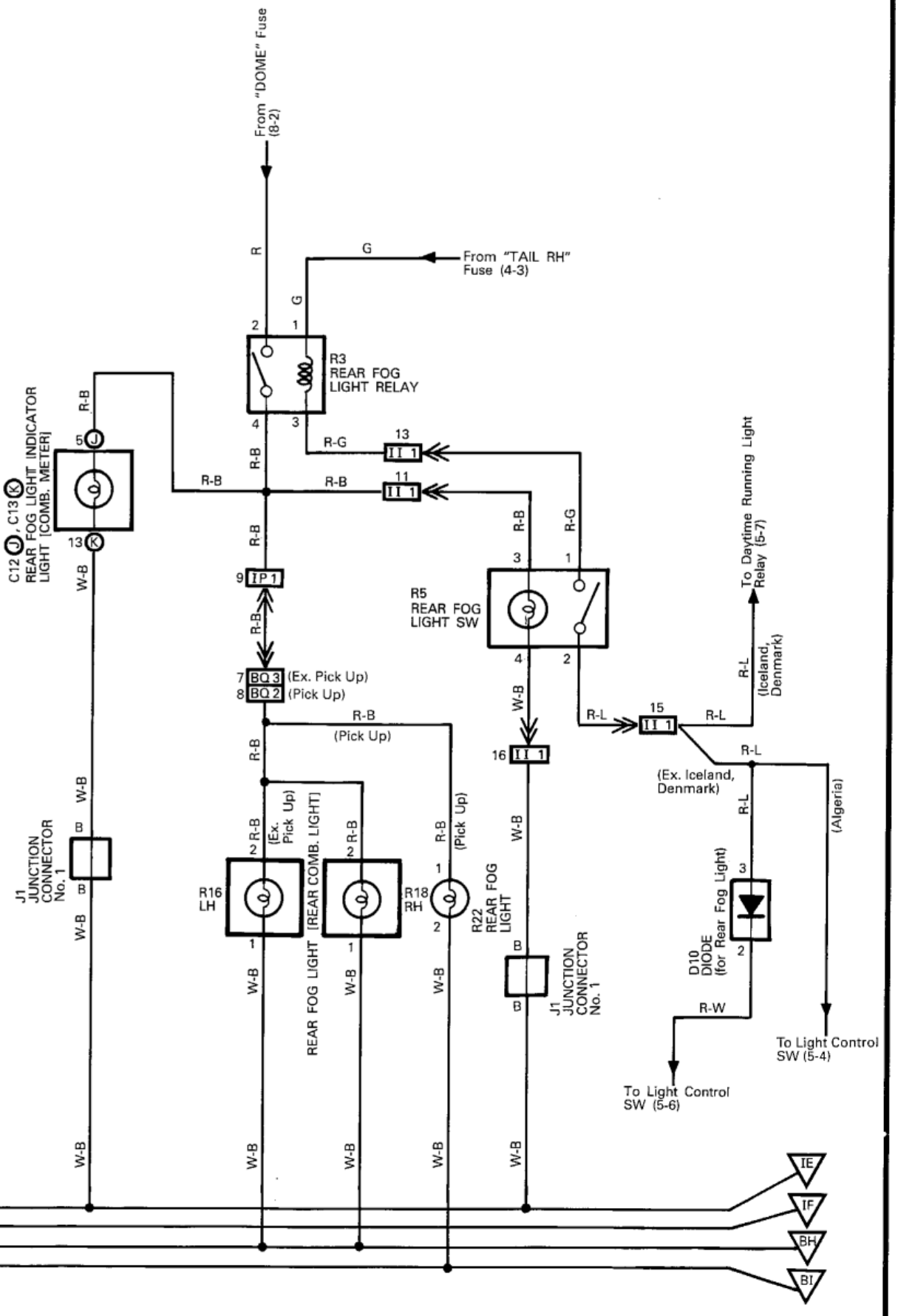
From "DOME" Fuse (8-2)
From "TAIL RH" Fuse (4-3)
R3 REAR FOG LIGHT RELAY
C12 J, C13 K REAR FOG LIGHT INDICATOR LIGHT [COMB. METER]
R5 REAR FOG LIGHT SW
To Daytime Running Light Relay (5-7)
(Iceland, Denmark)
(Ex. Iceland, Denmark)
(Algeria)
7 BQ3 (Ex. Pick Up)
8 BQ2 (Pick Up)
(Pick Up)
(Ex. Pick Up)
R16 LH
R18 RH
REAR FOG LIGHT [REAR COMB. LIGHT]
R22 REAR FOG LIGHT
J1 JUNCTION CONNECTOR No. 1
D10 DIODE (for Rear Fog Light)
To Light Control SW (5-4)
To Light Control SW (5-6)
IE
IF
BH
BI

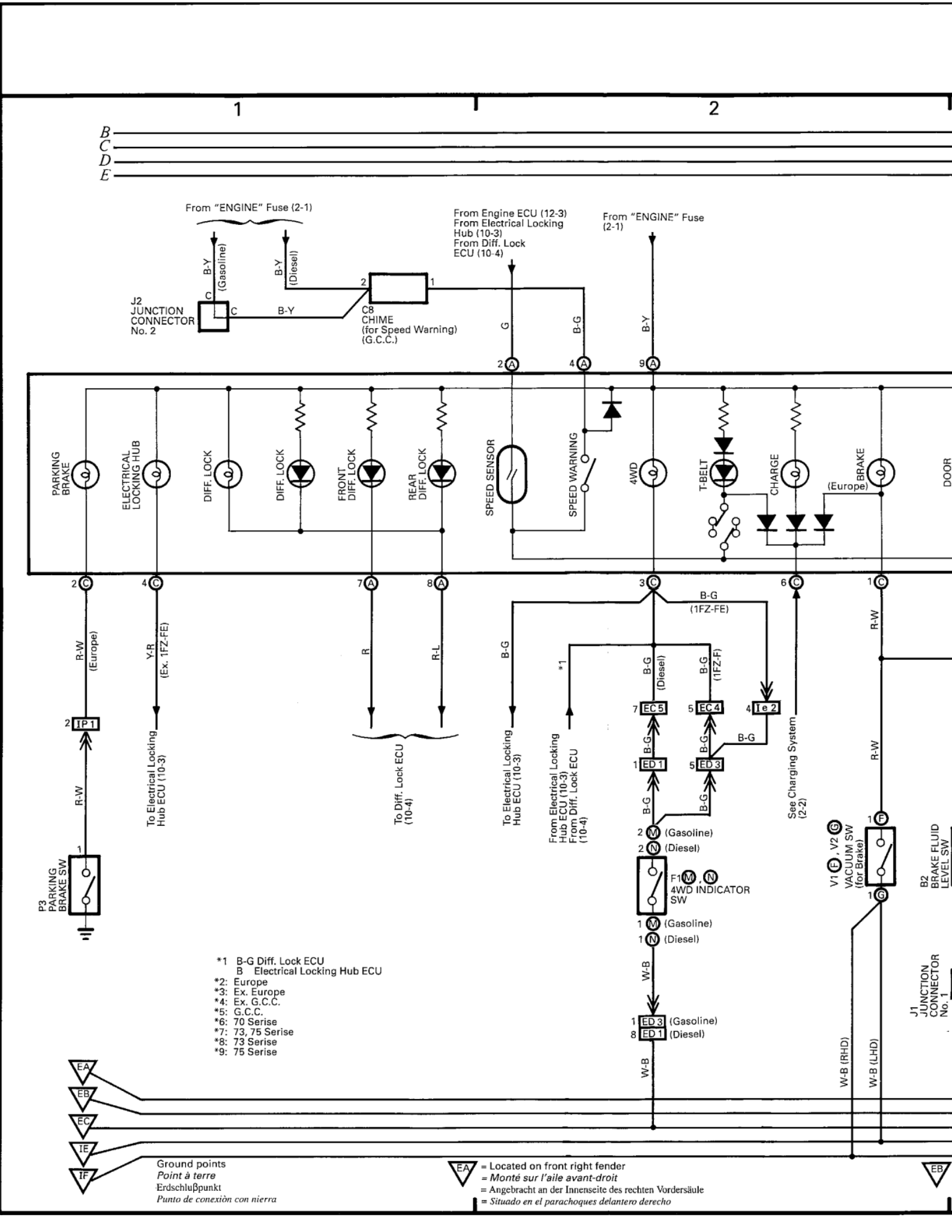
1
2
B
C
D
E
From "ENGINE" Fuse (2-1)
B-Y (Gasoline)
B-Y (Diesel)
J2 JUNCTION CONNECTOR No. 2
C8 CHIME (for Speed Warning) (G.C.C.)
From Engine ECU (12-3)
From Electrical Locking Hub (10-3)
From Diff. Lock ECU (10-4)
From "ENGINE" Fuse (2-1)
G
B-G
B-Y
PARKING BRAKE
ELECTRICAL LOCKING HUB
DIFF. LOCK
DIFF. LOCK
FRONT DIFF. LOCK
REAR DIFF. LOCK
SPEED SENSOR
SPEED WARNING
4WD
T-BELT
CHARGE
BRAKE
(Europe)
DOOR
R-W (Europe)
Y-R (Ex. 1FZ-FE)
R
R-L
B-G
B-G (1FZ-FE)
*1
B-G (Diesel)
B-G (1FZ-F)
R-W
IP 1
To Electrical Locking Hub ECU (10-3)
To Diff. Lock ECU (10-4)
To Electrical Locking Hub ECU (10-3)
From Electrical Locking Hub ECU (10-3)
From Diff. Lock ECU (10-4)
See Charging System (2-2)
EC 5
EC 4
Ie 2
ED 1
ED 3
(Gasoline)
(Diesel)
P3 PARKING BRAKE SW
F1 M , N 4WD INDICATOR SW
W-B
V1 F , V2 G VACUUM SW (for Brake)
B2 BRAKE FLUID LEVEL SW
W-B (RHD)
W-B (LHD)
J1 JUNCTION CONNECTOR No. 1
*1 B-G Diff. Lock ECU
B Electrical Locking Hub ECU
*2: Europe
*3: Ex. Europe
*4: Ex. G.C.C.
*5: G.C.C.
*6: 70 Serise
*7: 73, 75 Serise
*8: 73 Serise
*9: 75 Serise
EA
EB
EC
IE
IF
Ground points
Point à terre
Erdschlußpunkt
Punto de conexiòn con nierra
EA = Located on front right fender
= Monté sur l'aile avant-droit
= Angebracht an der Innenseite des rechten Vordersäule
= Situado en el parachoques delantero derecho
EB

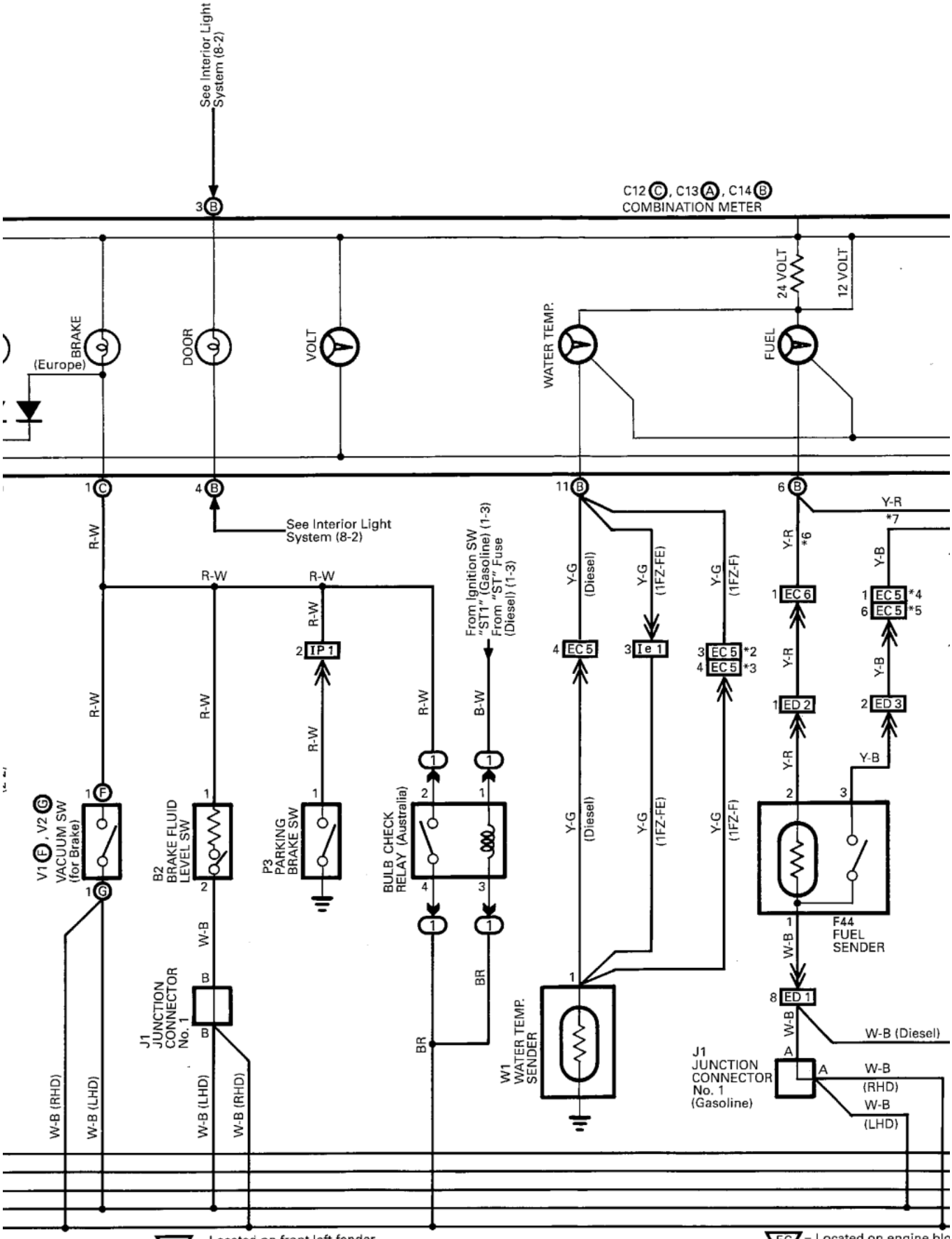
See Interior Light System (8-2)
3 B
C12 C, C13 A, C14 B
COMBINATION METER
24 VOLT
12 VOLT
BRAKE
(Europe)
DOOR
VOLT
WATER TEMP.
FUEL
1 C
4 B
See Interior Light System (8-2)
11 B
6 B
R-W
Y-R
*7
*6
Y-G
(Diesel)
(1FZ-FE)
(1FZ-F)
Y-B
From Ignition SW "ST1" (Gasoline) (1-3) From "ST" Fuse (Diesel) (1-3)
B-W
2 IP 1
4 EC 5
3 Te 1
3 EC 5 *2
4 EC 5 *3
1 EC 6
1 EC 5 *4
6 EC 5 *5
1 ED 2
2 ED 3
V1 E, V2 G
VACUUM SW (for Brake)
B2
BRAKE FLUID LEVEL SW
P3
PARKING BRAKE SW
BULB CHECK RELAY (Australia)
F44
FUEL SENDER
W-B
8 ED 1
W-B (Diesel)
J1
JUNCTION CONNECTOR No. 1
W-B (RHD)
W-B (LHD)
BR
W1
WATER TEMP. SENDER
J1
JUNCTION CONNECTOR No. 1 (Gasoline)
W-B (RHD)
W-B (LHD)
EB = Located on front left fender
= Monté sur l'aile avant-gauche
= Angebracht an der Innenseite des linken Vordersäule
= Situado en el parachoques delantero izquierdo
EC = Located on engine blo
= Monte sur le block-mo
= Angebracht am Motorbloc
= Situado en el bloque mot

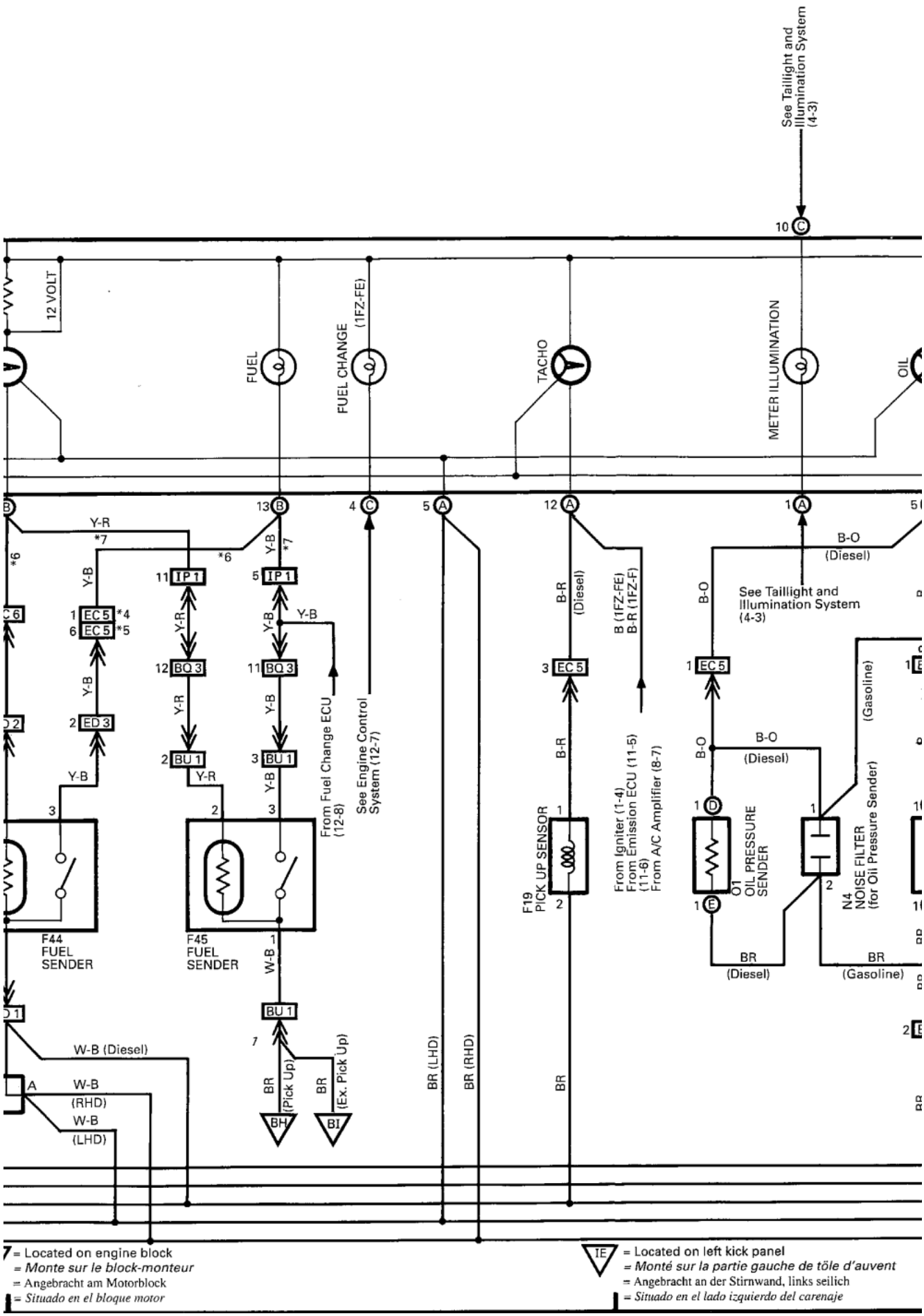
4
5
See Taillight and Illumination System (4-3)
10 C
12 VOLT
FUEL
FUEL CHANGE (1FZ-FE)
TACHO
METER ILLUMINATION
OIL
13 B
4 C
5 A
12 A
1 A
Y-R *7
*6
Y-B *7
B-O (Diesel)
B-R (Diesel)
B (1FZ-FE) B-R (1FZ-F)
11 IP 1
5 IP 1
1 EC 5 *4
6 EC 5 *5
12 BQ 3
11 BQ 3
2 ED 3
2 BU 1
3 BU 1
3 EC 5
1 EC 5
From Fuel Change ECU (12-8)
See Engine Control System (12-7)
See Taillight and Illumination System (4-3)
F44 FUEL SENDER
F45 FUEL SENDER
F19 PICK UP SENSOR
From Igniter (1-4)
From Emission ECU (11-5) (11-6)
From A/C Amplifier (8-7)
O1 OIL PRESSURE SENDER
N4 NOISE FILTER (for Oil Pressure Sender)
(Gasoline)
W-B (Diesel)
W-B (RHD)
W-B (LHD)
BR (Pick Up)
BR (Ex. Pick Up)
BR (LHD)
BR (RHD)
BR (Diesel)
BR (Gasoline)
BH
BI
7 = Located on engine block
= Monte sur le block-monteur
= Angebracht am Motorblock
= Situado en el bloque motor
1E = Located on left kick panel
= Monté sur la partie gauche de tôle d'auvent
= Angebracht an der Stirnwand, links seilich
= Situado en el lado izquierdo del carenaje

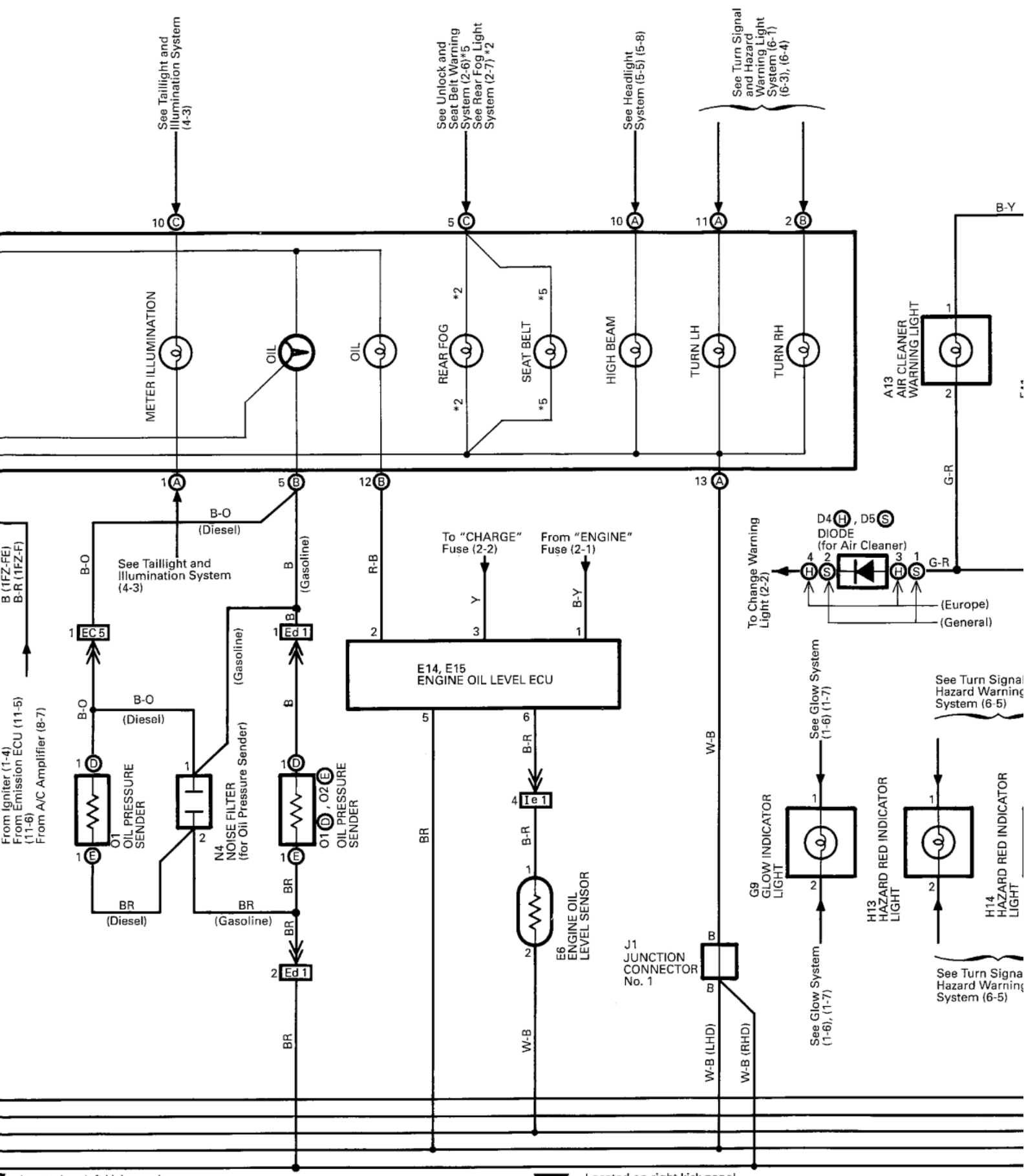

= Located on left kick panel
= *Monté sur la partie gauche de tôle d'auvent*
= Angebracht an der Stirnwand, links seilich
= *Situado en el lado izquierdo del carenaje*

IF = Located on right kick panel
= *Monté sur la partie droite de tôle d'auvent*
= Angebracht an der Stirnwand, rechts seitlich
= *Situado en el lado derecho del carenaje*

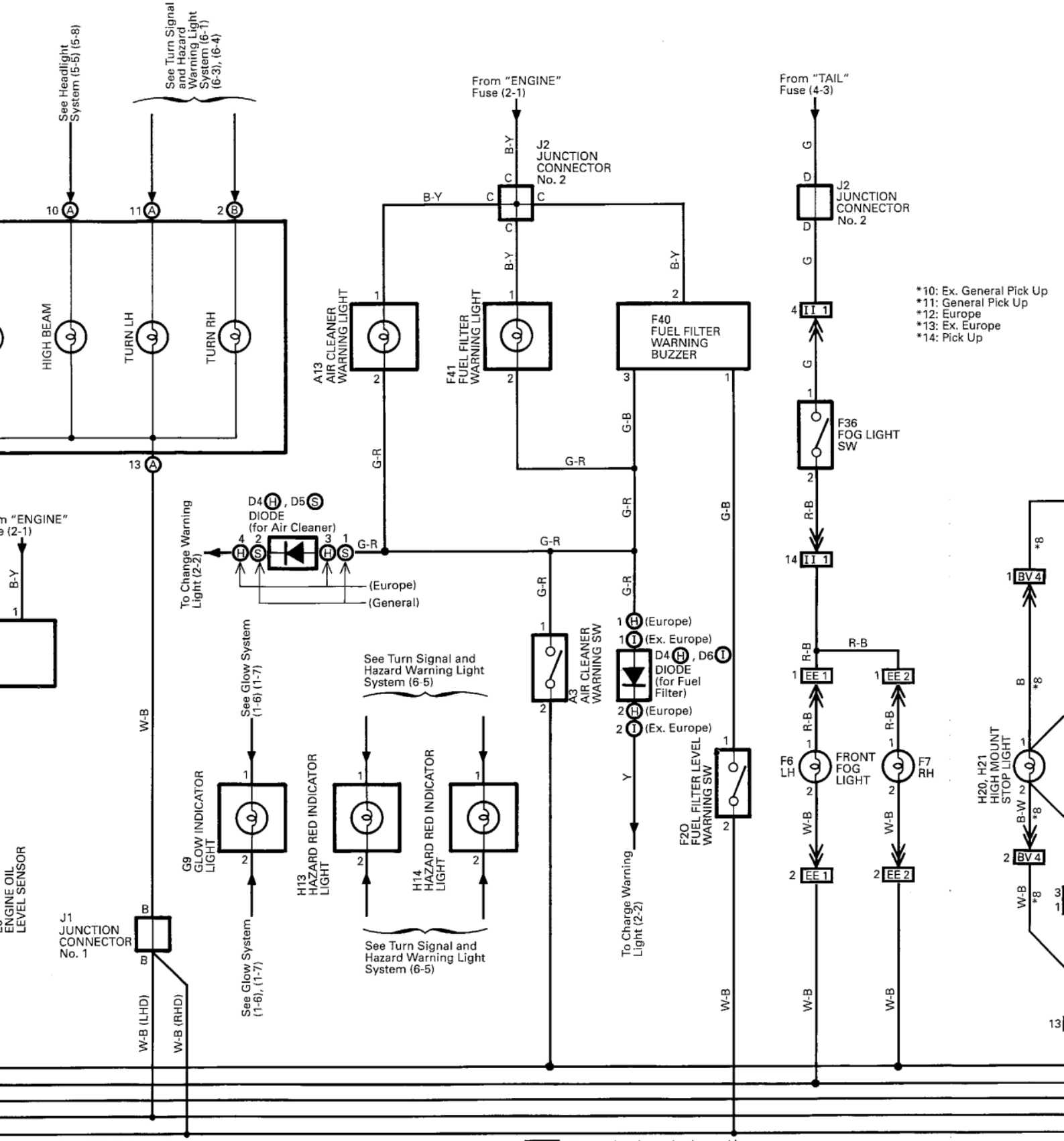

= Located on right kick panel
= *Monté sur la partie droite de tôle d'avent*
= Angebracht an der Stirnwand, rechts seitlich
= *Situado en el lado derecho del carenaje*

BH = Located on lower back panel inner
= *Monté sur le panneau intérieur de la porte arrière*
= Angebracht an der Innenseite der Hekklappe
= *Situado en el panel interior de la puerta trasera*

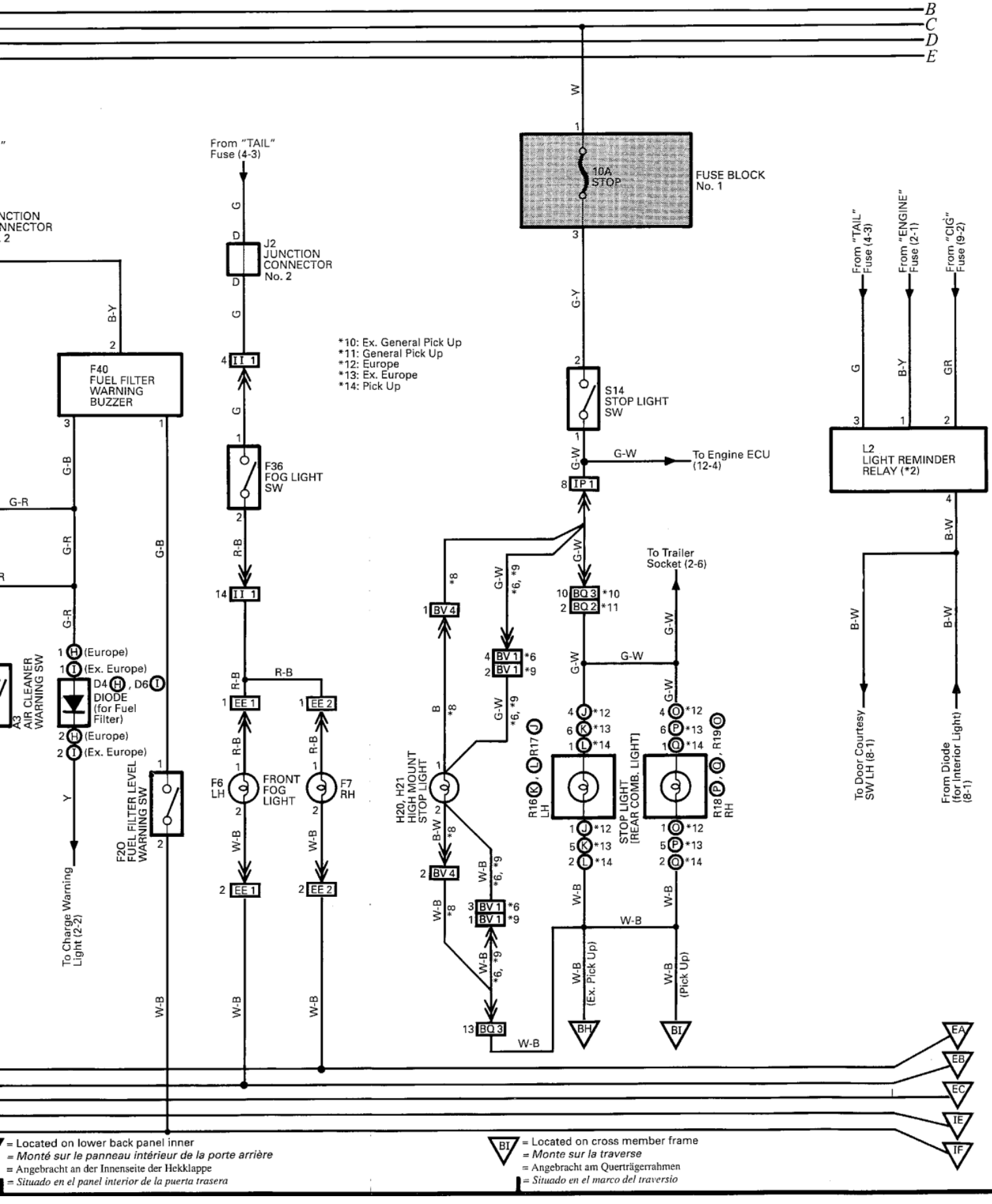

▼ = Located on lower back panel inner
= *Monté sur le panneau intérieur de la porte arrière*
= Angebracht an der Innenseite der Hekklappe
= *Situado en el panel interior de la puerta trasera*

BI = Located on cross member frame
= *Monte sur la traverse*
= Angebracht am Querträgerrahmen
= *Situado en el marco del traversio*

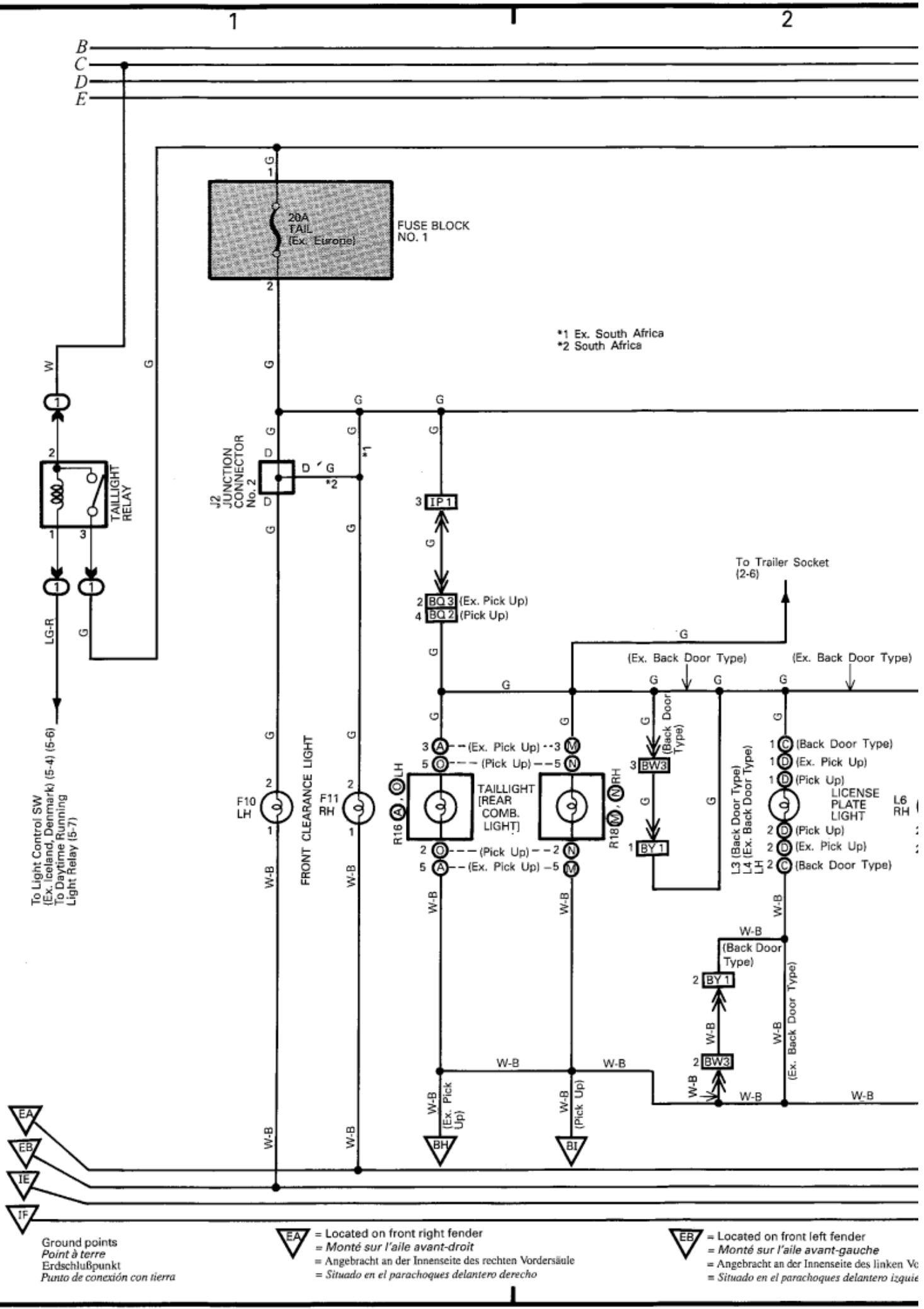
1
2
B
C
D
E
20A TAIL (Ex. Europe)
FUSE BLOCK NO. 1
*1 Ex. South Africa
*2 South Africa
TAILLIGHT RELAY
J2 JUNCTION CONNECTOR No. 2
To Trailer Socket (2-6)
(Ex. Back Door Type)
(Ex. Back Door Type)
(Back Door Type)
(Ex. Pick Up)
(Pick Up)
(Ex. Pick Up)
(Pick Up)
(Back Door Type)
(Ex. Pick Up)
(Pick Up)
(Ex. Pick Up)
(Back Door Type)
TAILLIGHT [REAR COMB. LIGHT]
LICENSE PLATE LIGHT
L3 (Back Door Type) L4 (Ex. Back Door Type) LH
L6 RH
F10 LH
F11 RH
FRONT CLEARANCE LIGHT
R16 LH
R18 RH
To Light Control SW (Ex. Iceland, Denmark) (5-4) (5-6)
To Daytime Running Light Relay (5-7)
(Back Door Type)
(Ex. Back Door Type)
(Ex. Pick Up)
(Pick Up)
(Ex. Back Door Type)
EA
EB
IE
IF
Ground points
Point à terre
Erdschlußpunkt
Punto de conexión con tierra
= Located on front right fender
= Monté sur l'aile avant-droit
= Angebracht an der Innenseite des rechten Vordersäule
= Situado en el parachoques delantero derecho
= Located on front left fender
= Monté sur l'aile avant-gauche
= Angebracht an der Innenseite des linken Vo
= Situado en el parachoques delantero izquie

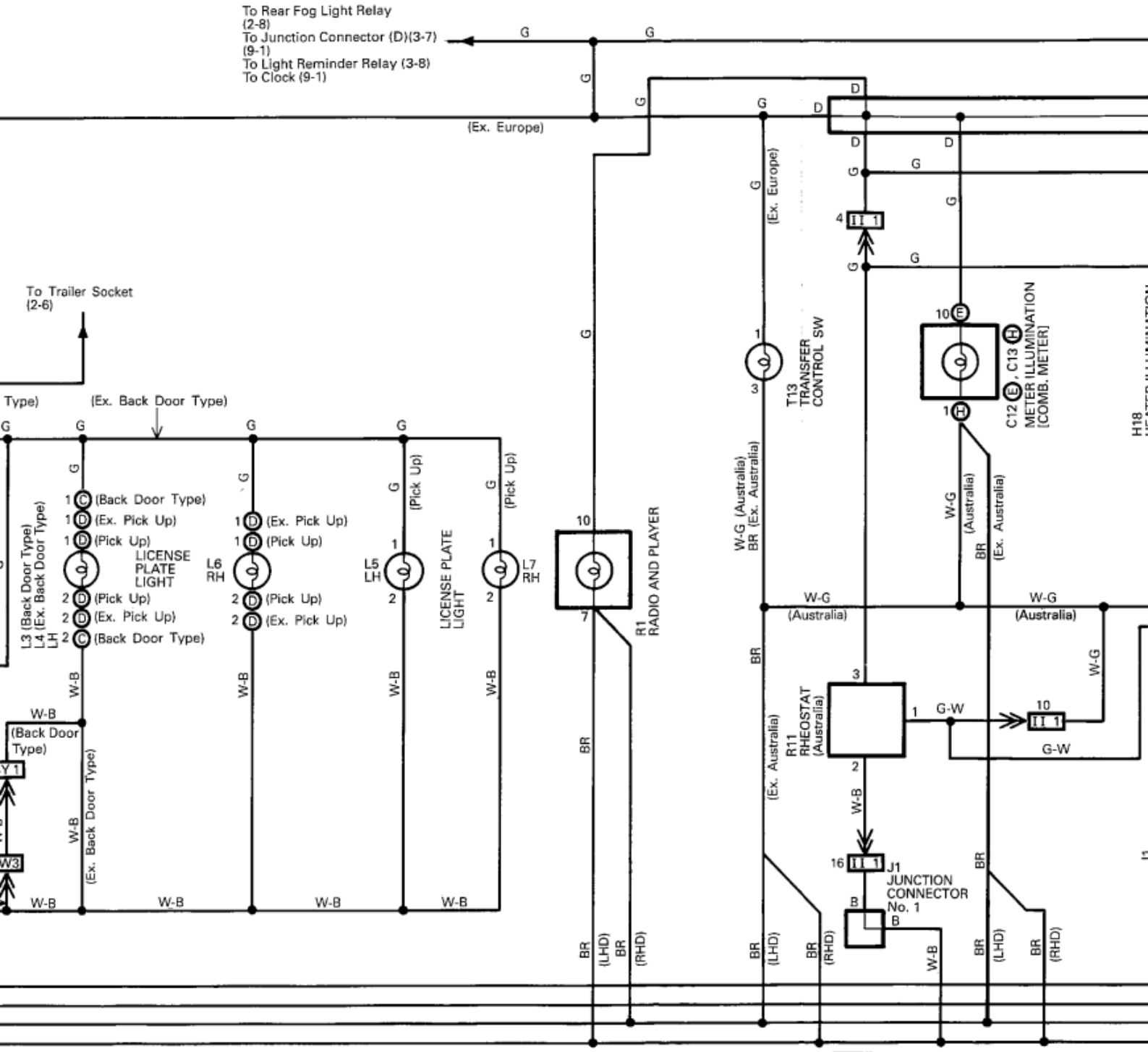

= Located on front left fender
= *Monté sur l'aile avant-gauche*
= Angebracht an der Innenseite des linken Vordersäule
= *Situado en el parachoques delantero izquierdo*

IE = Located on left kick panel
= *Monté sur la partie gauche de tôle d'auvent*
= Angebracht an der Stirnwand, links seilich
= *Situado en el lado izquierdo del carenaje*

IF = Located on right kick panel
= *Monté sur la partie droite de tôle d'auven*
= Angebracht an der Stirnwand, rechts seitlich
= *Situado en el lado derecho del carenaje*

3 4

(Europe)

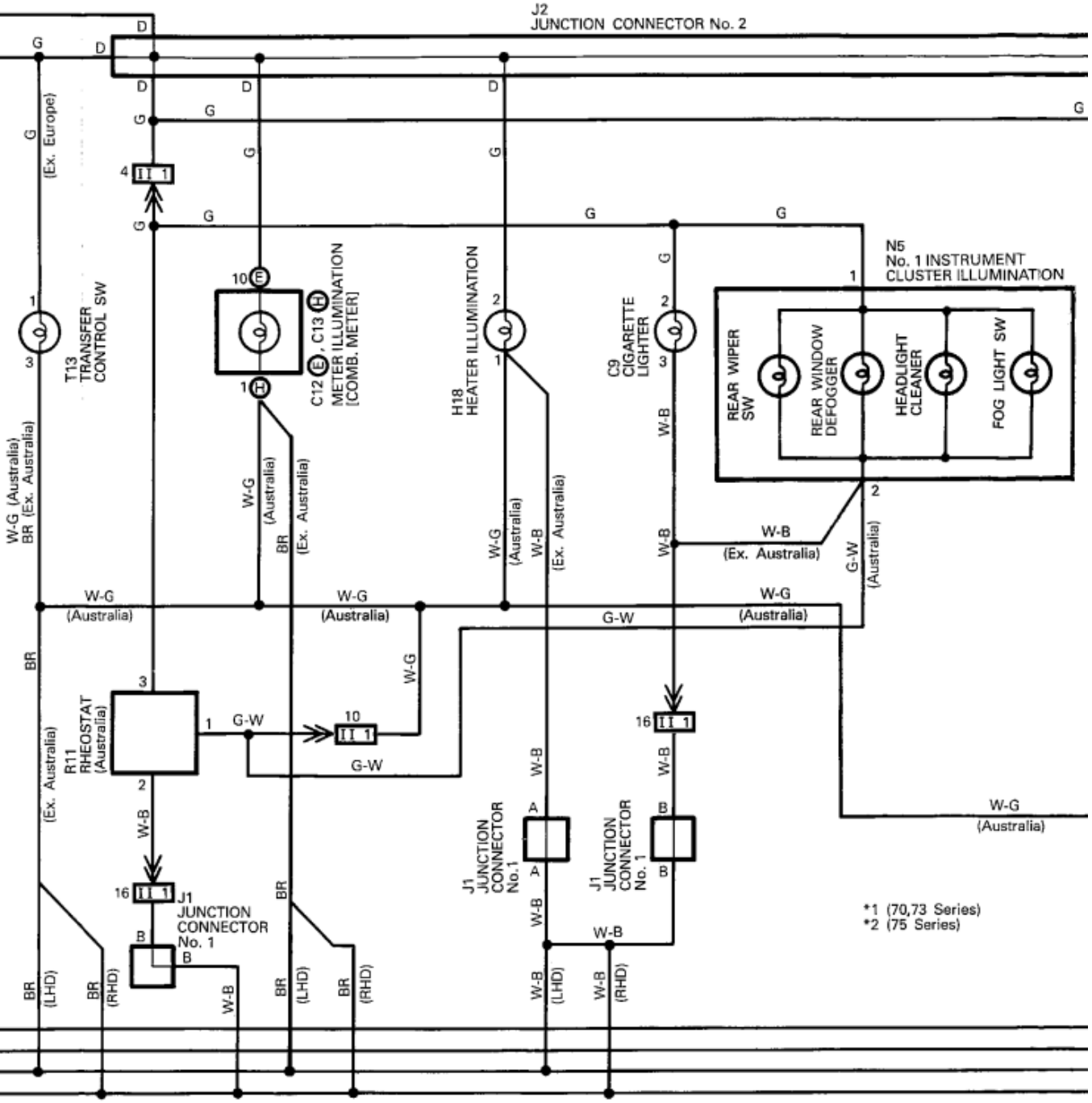

IF = Located on right kick panel
= *Monté sur la partie droite de tôle d'auvent*
= Angebracht an der Stirnwand, rechts seitlich
= *Situado en el lado derecho del carenaje*

BH = Located on lower back panel inner
= *Monté sur le panneau intérieur de la porte arrière*
= Angebracht an der Innenseite der Hekklappe
= *Situado en el panel interior de la puerta trasera*

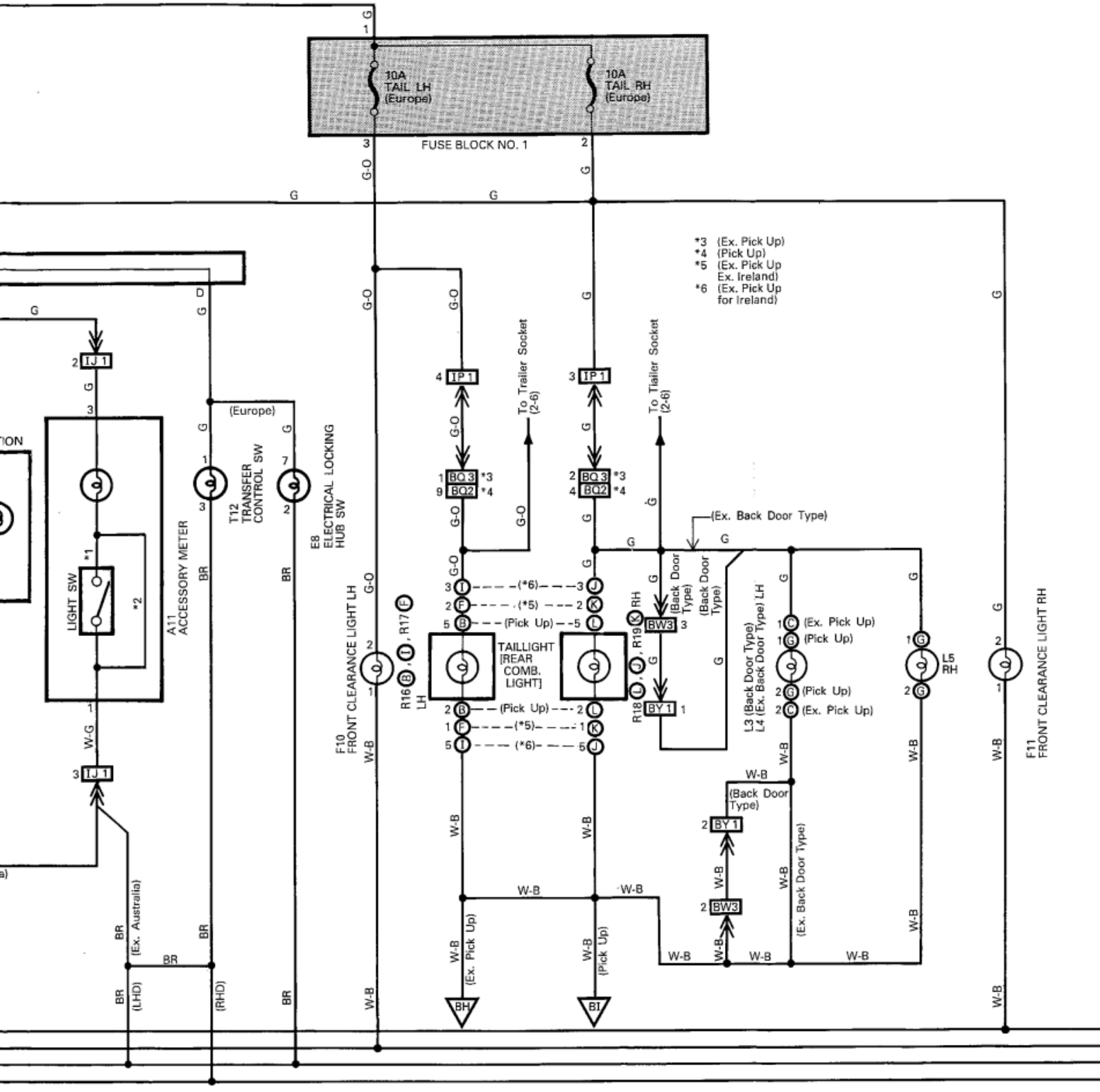

BI = Located on cross member frame
= *Monté sur la traverse*
= Angebracht am Querträgerrahmen
= *Situado en el marco del travesaño*

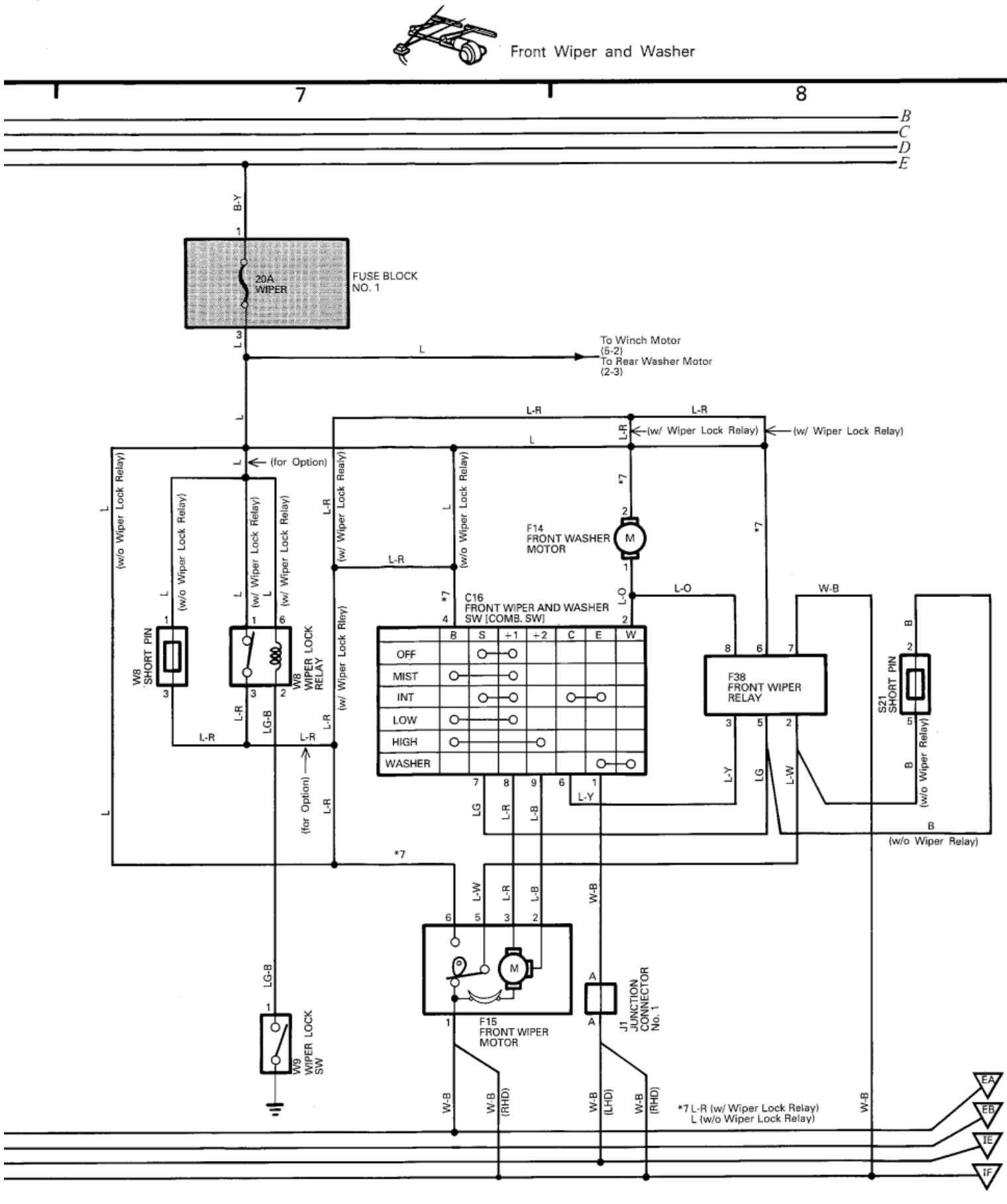
7
8
B
C
D
E
B-Y
20A WIPER
FUSE BLOCK NO. 1
To Winch Motor (5-2)
To Rear Washer Motor (2-3)
(w/ Wiper Lock Relay)
(for Option)
(w/o Wiper Lock Relay)
(w/ Wiper Lock Relay)
F14 FRONT WASHER MOTOR
C16 FRONT WIPER AND WASHER SW [COMB. SW]
B S +1 +2 C E W
OFF
MIST
INT
LOW
HIGH
WASHER
W8 SHORT PIN
W8 WIPER LOCK RELAY
F38 FRONT WIPER RELAY
S21 SHORT PIN
(w/o Wiper Relay)
F15 FRONT WIPER MOTOR
J1 JUNCTION CONNECTOR No. 1
W9 WIPER LOCK SW
(RHD)
(LHD)
*7 L-R (w/ Wiper Lock Relay)
L (w/o Wiper Lock Relay)
EA
EB
IE
IF

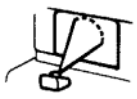

Headlight Cleaner

Winch

1 2

B
C
D
E

From "WIPER" Fuse (4-8)

From Battery (1-2)

W4 (A), W5 (J), W6 (B)
WINCH MAIN RELAY

W7 (C), W10 (K)
WINCH MOTOR AND MAGNETIC SW

H3
HEADLIGHT CLEANER MOTOR

H4
HEADLIGHT CLEANER RELAY

H17
HEADLIGHT CLEANER SW

TEMP. SW

POWER

TEMP.

BUZZER

OUT

IN

To Light Control SW (5-6)
To Daytime Running Light Relay (5-7)

R-W (Ex. Iceland, Denmark)
R-G (Iceland, Denmark)

EF 1
1e 1
EC 4
EC 3
ED 1 (1PZ, 1HZ)
ED 3 (1FZ-F, 1FZ-FE)
(1HZ)
(1PZ)
(1FZ-FE, 1FZ-FE)
B11 BACK-UP LIGHT SW
(Gasoline)
(Diesel)
(1FZ-FE)
(1FZ-F)

EA
EB
IE
IF

Ground points
Point à terre
Erdschlußpunkt
Punto de conexión con tierra

EA = Located on front right fender
= Monté sur l'aile avant-droit
= Angebracht an der Innenseite des rechten Vordersäule
= Situado en el parachoques delantero derecho

EB = Located on front left fender
= Monté sur l'aile avant-gauche
= Angebracht an der Innenseite des linken Vordersäule
= Situado en el parachoques delantero izquierdo

IE

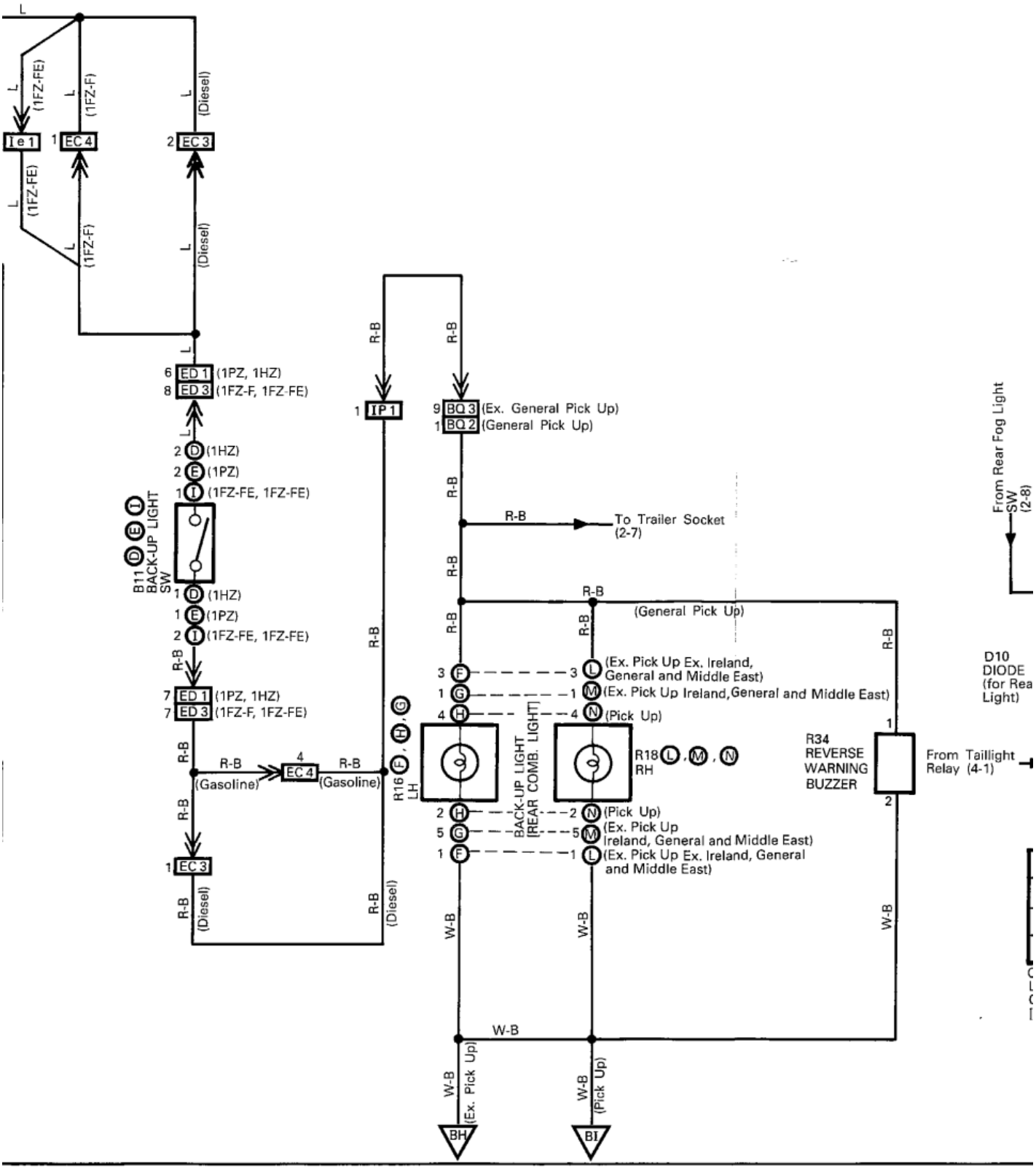

n front left fender
l'aile avant-gauche
an der Innenseite des linken Vordersäule
el parachoques delantero izquierdo

IE = Located on left kick panel
= Monté sur la partie gauche de tôle d'auvent
= Angebracht an der Stirnwand, links seitlich
= Situado en el lado izquierdo del carenaje

IF = Located on right kick panel
= Monté sur la partie droite de tôle d'auve
= Angebracht an der Stirnwand, rechts seitlich
= Situado en el lado derecho del carenaje

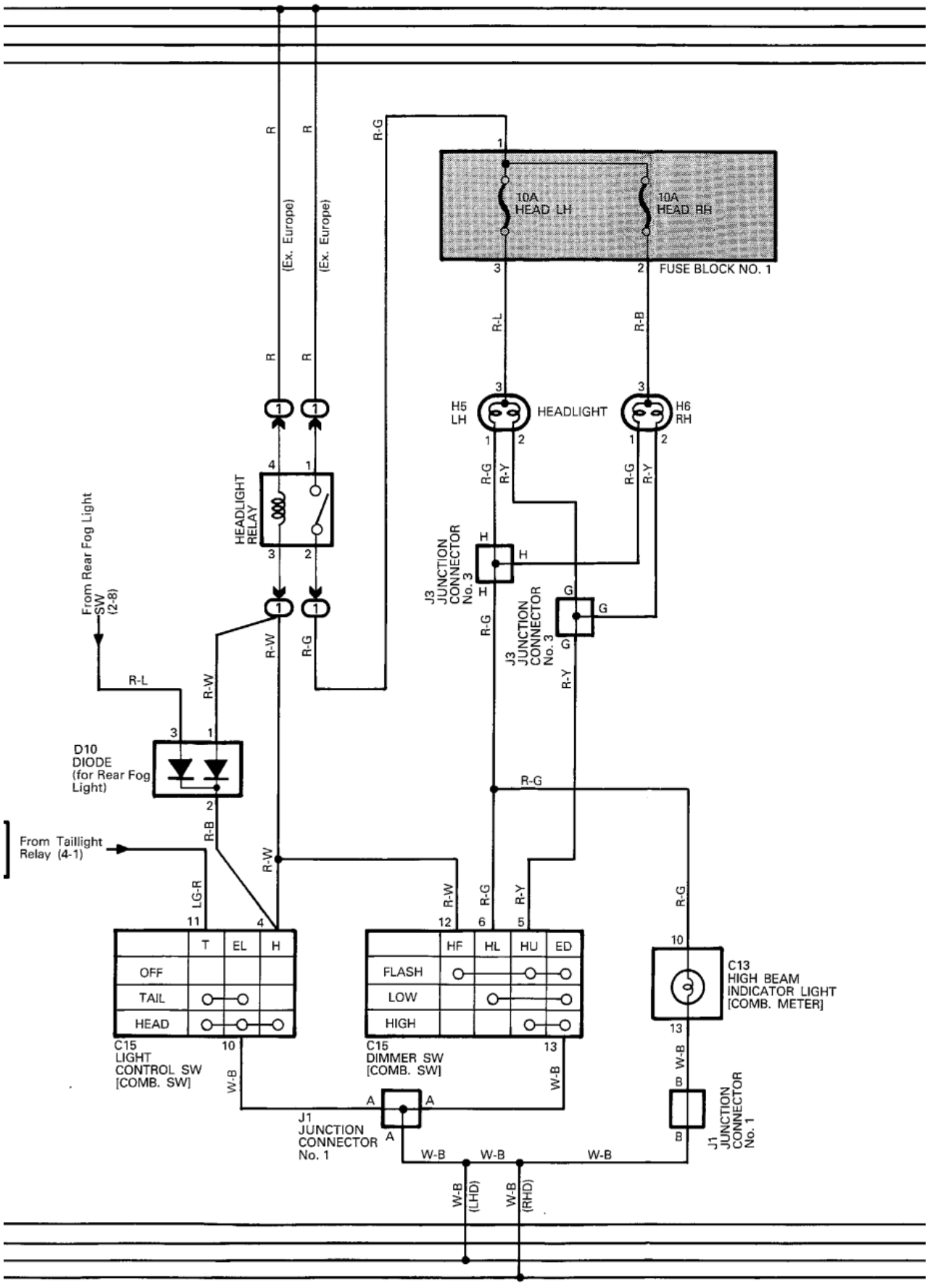

: panel
froite de tôle d'auvent
wand, rechts seitlich
ho del carenaje

BH = Located on lower back panel inner
= *Monté sur le panneau intérieur de la porte arrière*
= Angebracht an der Innenseite der Hekklappe
= *Situado en el panel interior de la puerta trasera*

BI = Located on cross member frame
= *Monté sur la traverse*
= Angebracht am Querträgerrahmen
= *Situado en el marco del travesaño*

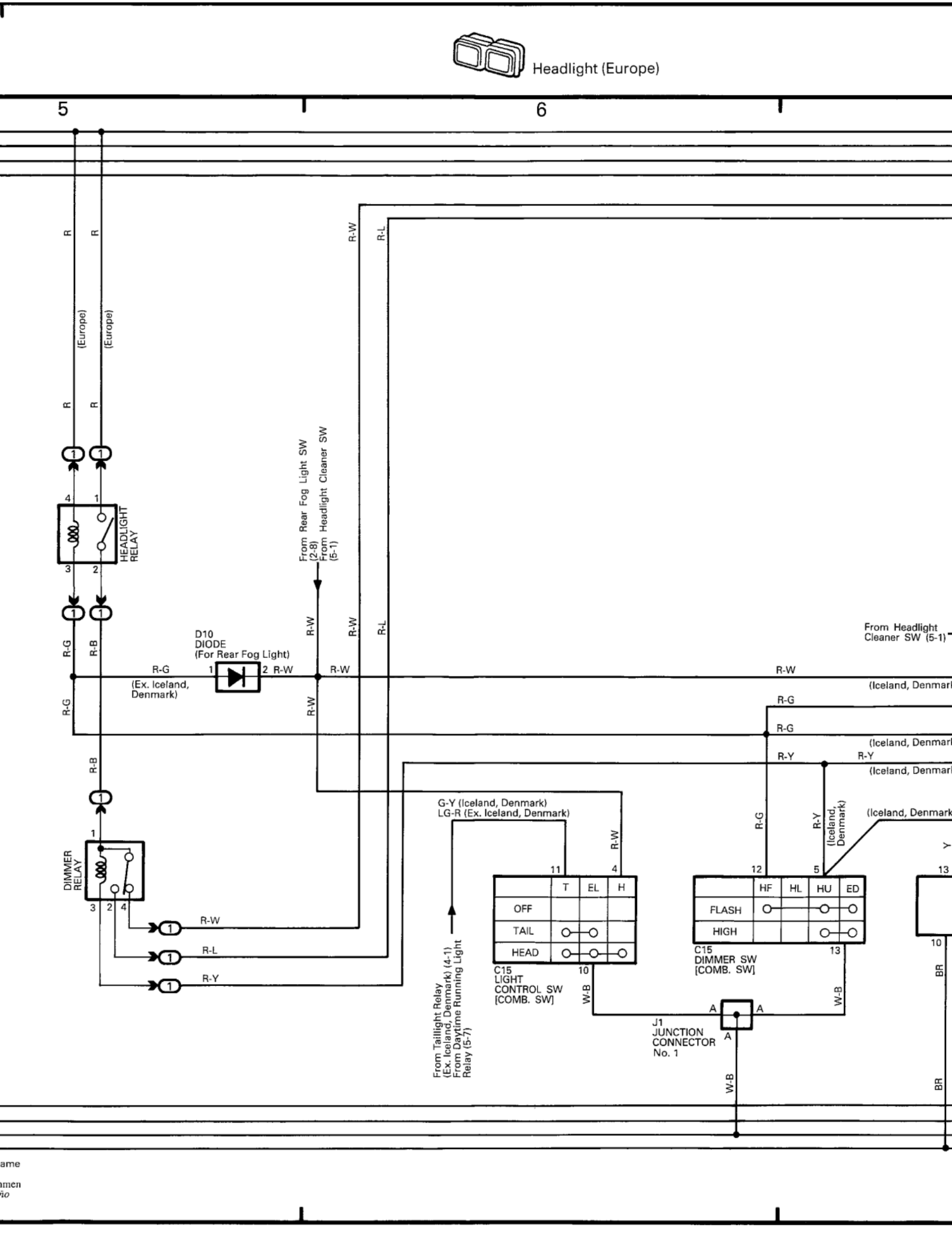

Headlight (Europe)
5
6
R
(Europe)
HEADLIGHT RELAY
R-G
R-B
D10
DIODE
(For Rear Fog Light)
(Ex. Iceland, Denmark)
R-W
R-L
From Rear Fog Light SW (2-8)
From Headlight Cleaner SW (5-1)
From Headlight Cleaner SW (5-1)
(Iceland, Denmark)
R-Y
DIMMER RELAY
G-Y (Iceland, Denmark)
LG-R (Ex. Iceland, Denmark)
From Taillight Relay (Ex. Iceland, Denmark) (4-1)
From Daytime Running Light Relay (5-7)
C15
LIGHT CONTROL SW
[COMB. SW]
T
EL
H
OFF
TAIL
HEAD
C15
DIMMER SW
[COMB. SW]
HF
HL
HU
ED
FLASH
HIGH
J1
JUNCTION CONNECTOR No. 1
W-B
BR

e)

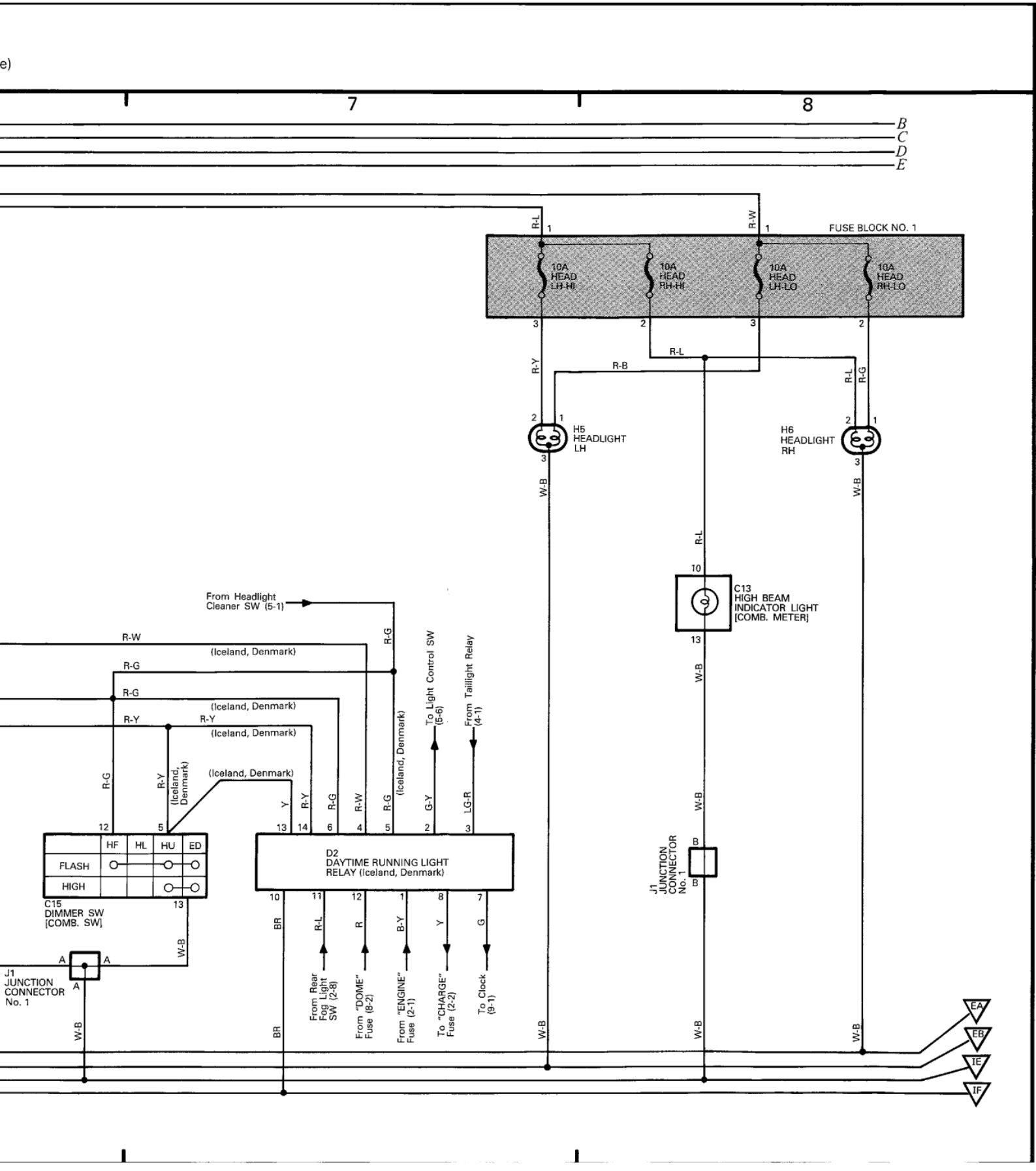
7
8
B
C
D
E
FUSE BLOCK NO. 1
10A HEAD LH-HI
10A HEAD RH-HI
10A HEAD LH-LO
10A HEAD RH-LO
R-L
R-W
R-Y
R-B
R-G
H5 HEADLIGHT LH
H6 HEADLIGHT RH
W-B
C13 HIGH BEAM INDICATOR LIGHT [COMB. METER]
J1 JUNCTION CONNECTOR No. 1
From Headlight Cleaner SW (5-1)
(Iceland, Denmark)
To Light Control SW (5-6)
From Taillight Relay (4-1)
G-Y
LG-R
Y
BR
B-Y
G
HF
HL
HU
ED
FLASH
HIGH
C15 DIMMER SW [COMB. SW]
D2 DAYTIME RUNNING LIGHT RELAY (Iceland, Denmark)
From Rear Fog Light SW (2-8)
From "DOME" Fuse (8-2)
From "ENGINE" Fuse (2-1)
To "CHARGE" Fuse (2-2)
To Clock (9-1)
EA
EB
IE
IF

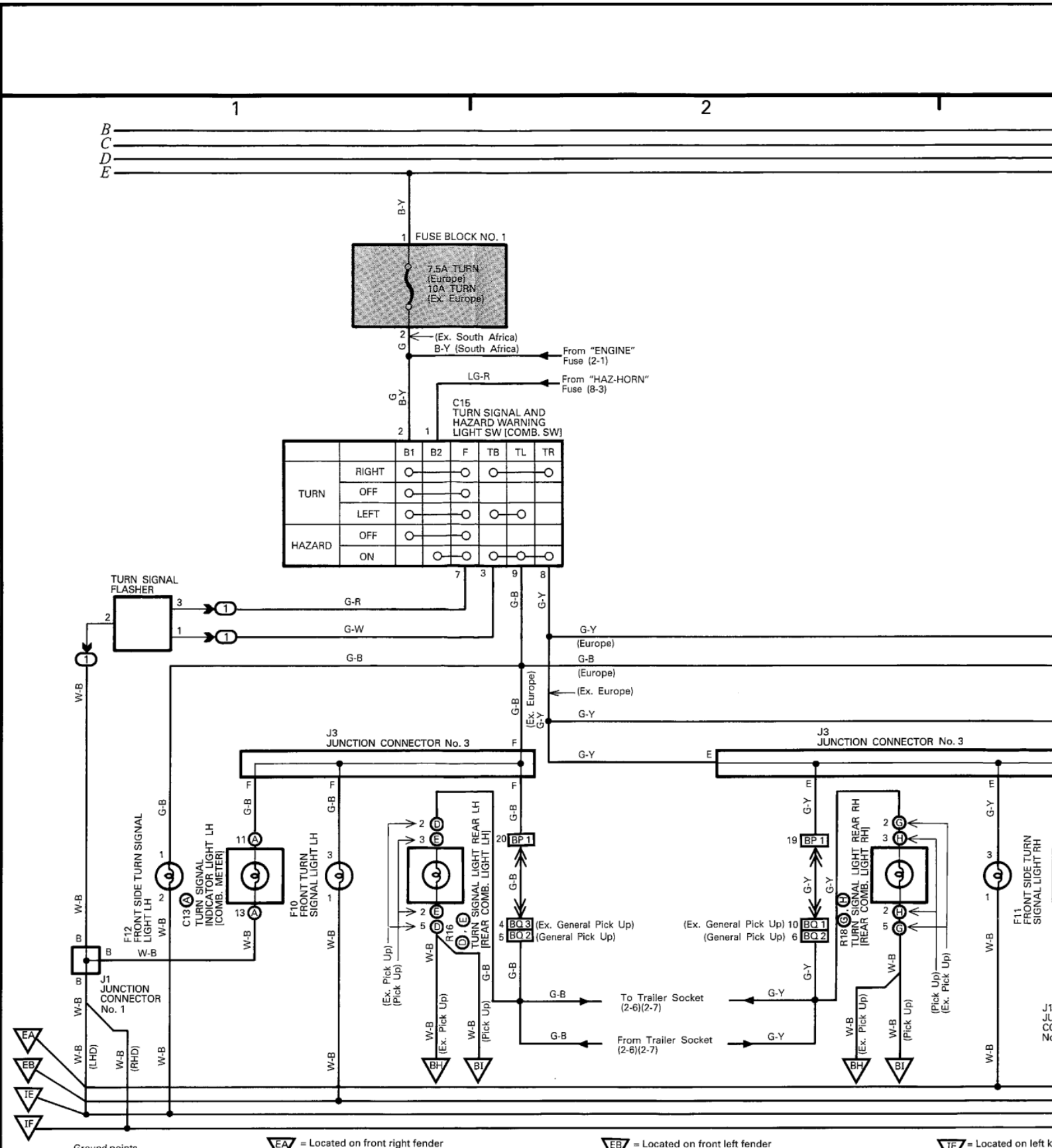
1
2
B
C
D
E
B-Y
1
FUSE BLOCK NO. 1
7.5A TURN
(Europe)
10A TURN
(Ex. Europe)
2
G
(Ex. South Africa)
B-Y (South Africa)
From "ENGINE"
Fuse (2-1)
LG-R
From "HAZ-HORN"
Fuse (8-3)
G
B-Y
C15
TURN SIGNAL AND
HAZARD WARNING
LIGHT SW [COMB. SW]
2
1
B1
B2
F
TB
TL
TR
TURN
RIGHT
OFF
LEFT
HAZARD
OFF
ON
7
3
9
8
TURN SIGNAL
FLASHER
3
2
1
G-R
G-W
G-B
G-Y
G-Y
(Europe)
G-B
(Europe)
(Ex. Europe)
G-Y
W-B
J3
JUNCTION CONNECTOR No. 3
F
G-Y
E
J3
JUNCTION CONNECTOR No. 3
F12
FRONT SIDE TURN SIGNAL
LIGHT LH
C13
TURN SIGNAL
INDICATOR LIGHT LH
[COMB. METER]
F10
FRONT TURN
SIGNAL LIGHT LH
R16
TURN SIGNAL LIGHT REAR LH
[REAR COMB. LIGHT LH]
BP 1
BQ 3
BQ 2
(Ex. General Pick Up)
(General Pick Up)
(Ex. General Pick Up)
(General Pick Up)
BQ 1
BQ 2
R18
TURN SIGNAL LIGHT REAR RH
[REAR COMB. LIGHT RH]
F11
FRONT SIDE TURN
SIGNAL LIGHT RH
(Ex. Pick Up)
(Pick Up)
To Trailer Socket
(2-6)(2-7)
From Trailer Socket
(2-6)(2-7)
J1
JUNCTION
CONNECTOR
No. 1
(LHD)
(RHD)
BH
BI
EA
EB
IE
IF
Ground points
Point à terre
Erdschlußpunkt
Punto de conexión con tierra
EA = Located on front right fender
= Monté sur l'aile avant-droit
= Angebracht an der Innenseite des rechten Vordersäule
= Situado en el parachoques delantero derecho
EB = Located on front left fender
= Monté sur l'aile avant-gauche
= Angebracht an der Innenseite des linken Vordersäule
= Situado en el parachoques delantero izquierdo
IE = Located on left k
= Monté sur la par
= Angebracht an der
= Situado en el lado

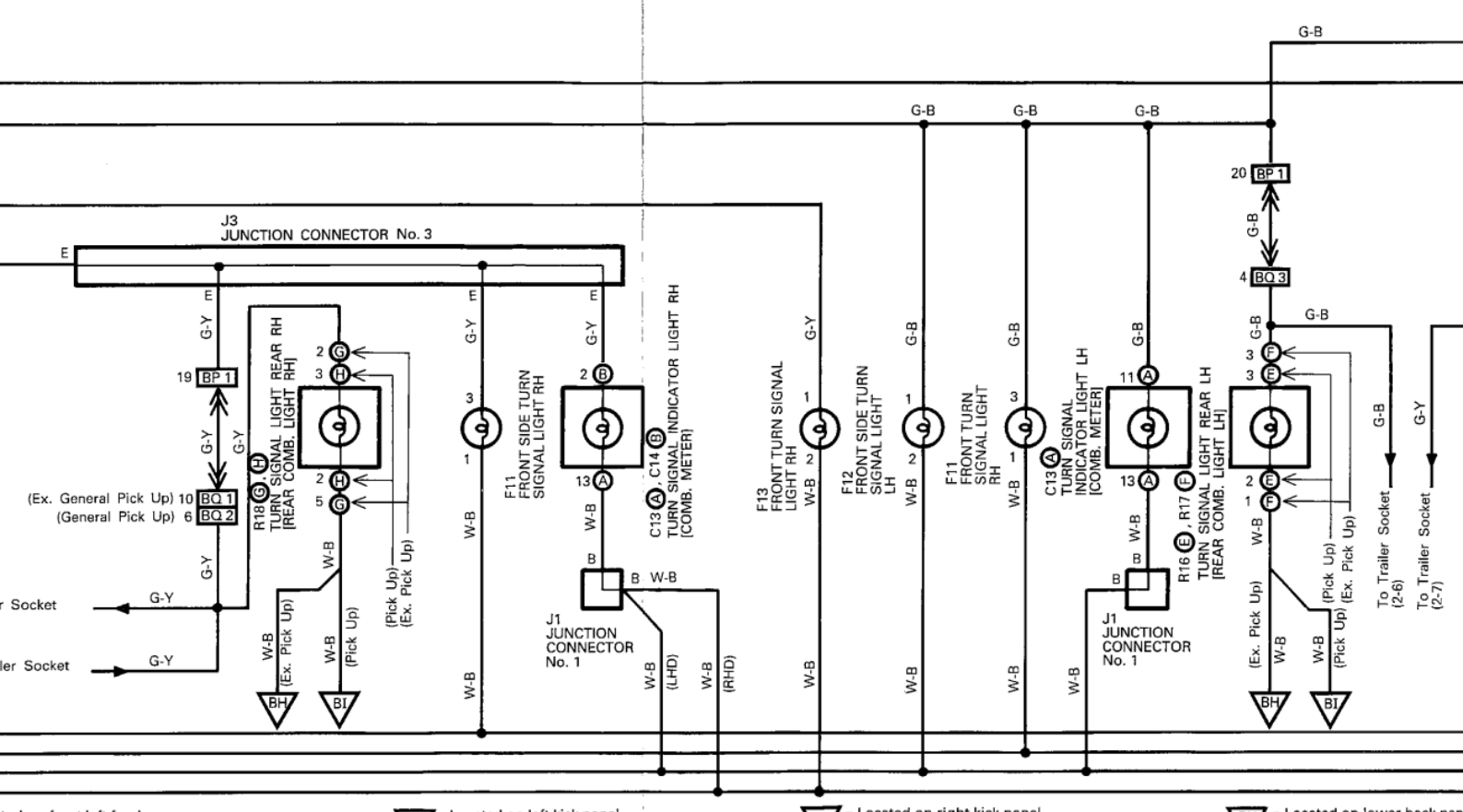

ted on front left fender
té sur l'aile avant-gauche
bracht an der Innenseite des linken Vordersäule
do en el parachoques delantero izquierdo

IE = Located on left kick panel
= Monté sur la partie gauche de tôle d'auvent
= Angebracht an der Stirnwand, links seitlich
= Situado en el lado izquierdo del carenaje

IF = Located on right kick panel
= Monté sur la partie droite de tôle d'auvent
= Angebracht an der Stirnwand, rechts seitlich
= Situado en el lado derecho del carenaje

BH = Located on lower back pan
= Monté sur le panneau intéi
= Angebracht an der Innenseite de
= Situado en el panel interior de

B
C
D
E

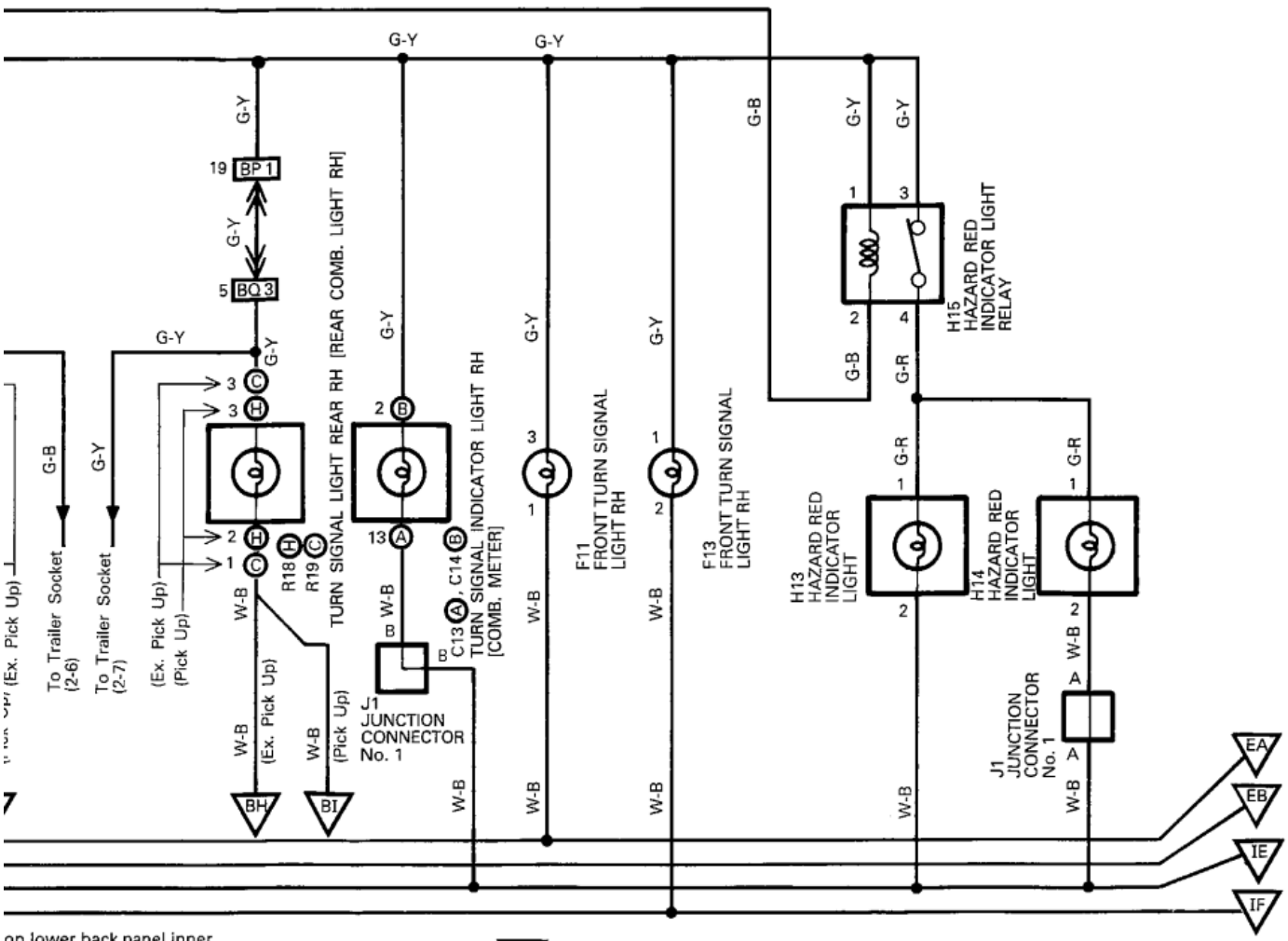

on lower back panel inner
ur le panneau intérieur de la porte arrière
nt an der Innenseite der Hekklappe
n el panel interior de la puerta trasera

BI = Located on cross member frame
= *Monté sur la traverse*
= Angebracht am Querträgerrahmen
= *Situado en el marco del travesaño*

Moon Roof

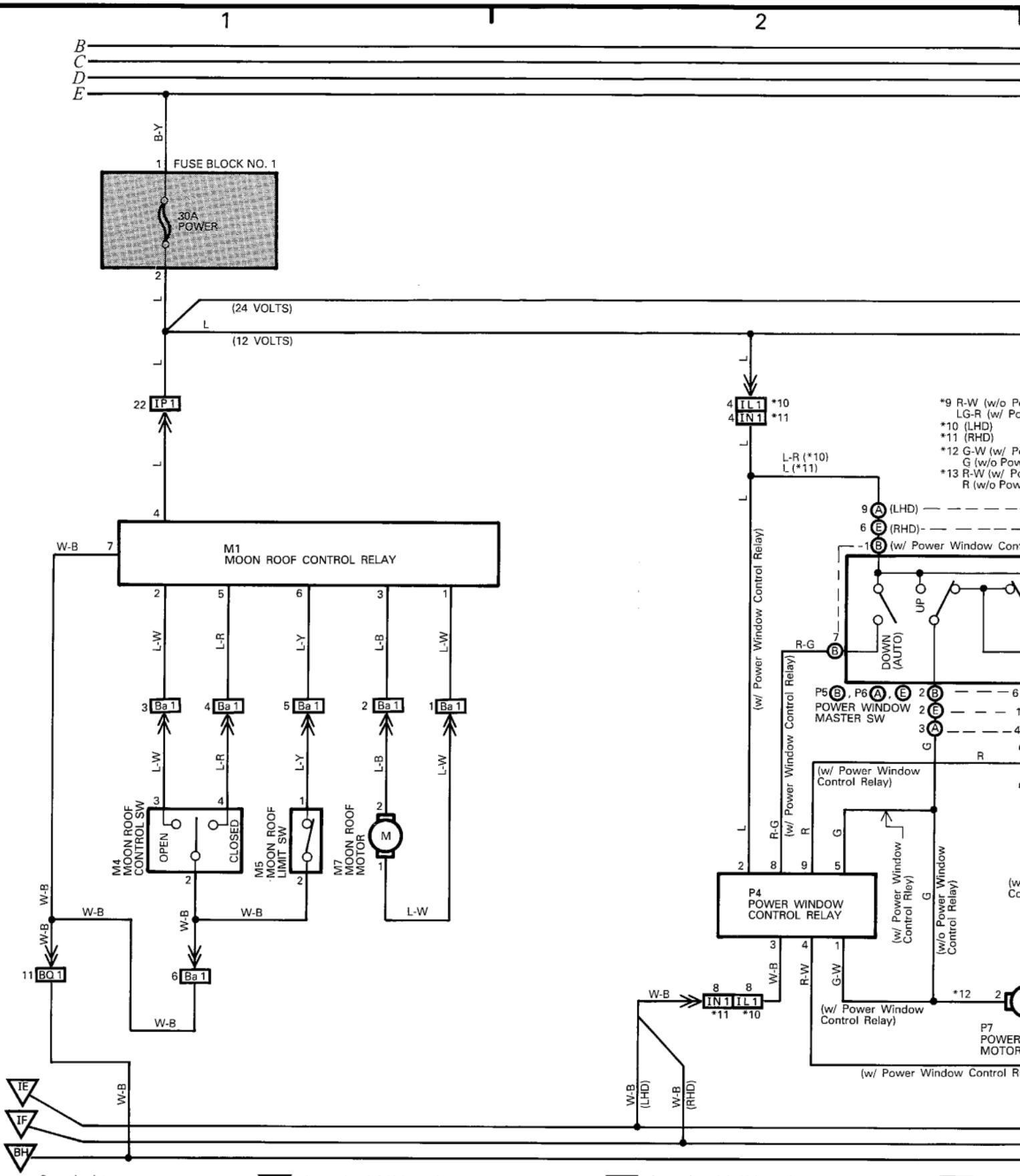

Ground points
Point à terre
Erdschlußpunkt
Punto de conexión con tierra

IE = Located on left kick panel
= Monté sur la partie gauche de tôle d'auvent
= Angebracht an der Stirnwand, links seitlich
= Situado en el lado izquierdo del carenaje

IF = Located on right kick panel
= Monté sur la partie droite de tôle d'auvent
= Angebracht an der Stirnwand, rechts seitlich
= Situado en el lado derecho del carenaje

BH = Locate
= Monté
= Angebr
= Situado

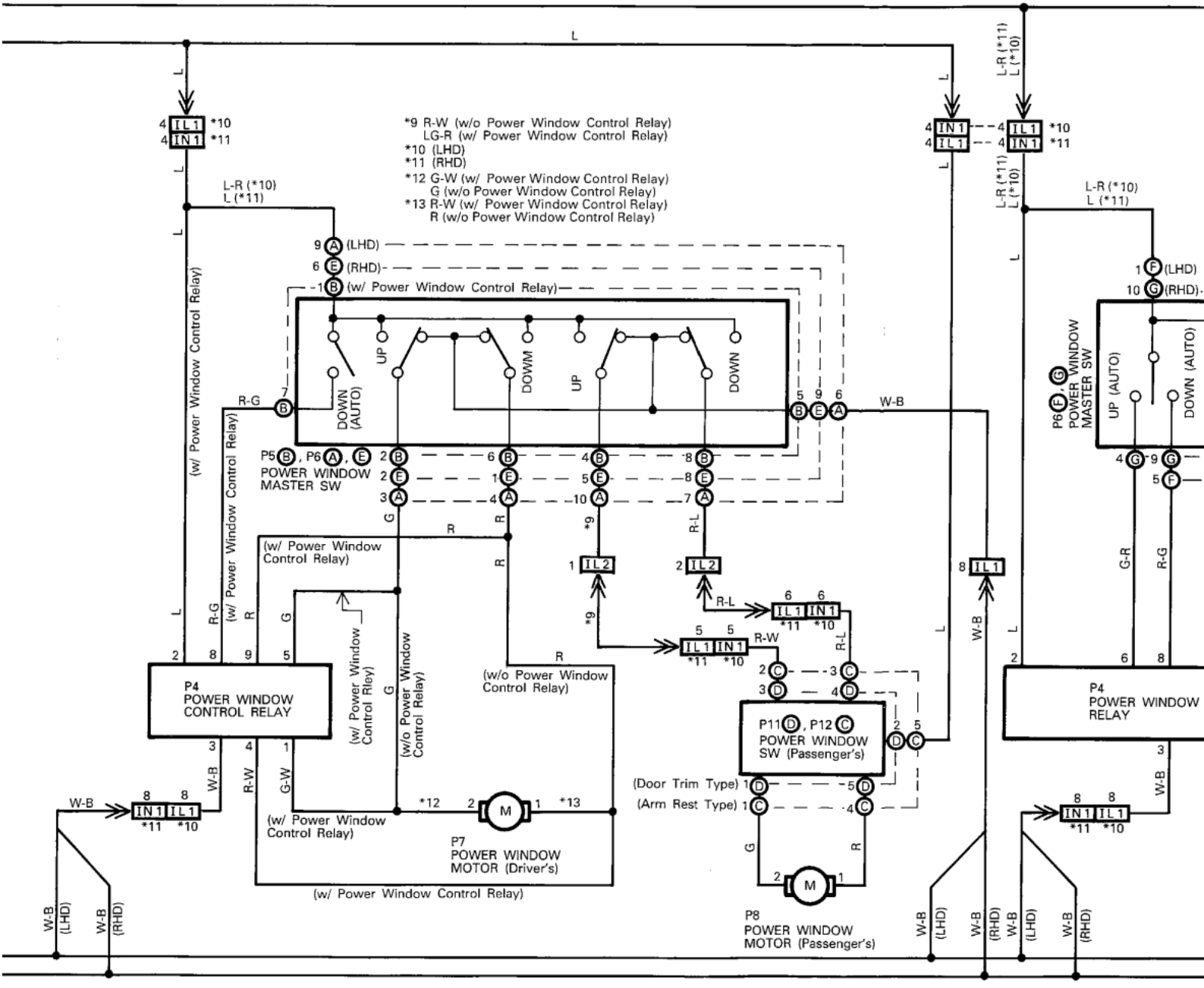

IF = Located on right kick panel
= Monté sur la partie droite de tôle d'auvent
= Angebracht an der Stirnwand, rechts seitlich
= Situado en el lado derecho del carenaje

BH = Located on lower back panel inner
= Monté sur le panneau intérieur de la porte arrière
= Angebracht an der Innenseite der Hekklappe
= Situado en el panel interior de la puerta trasera

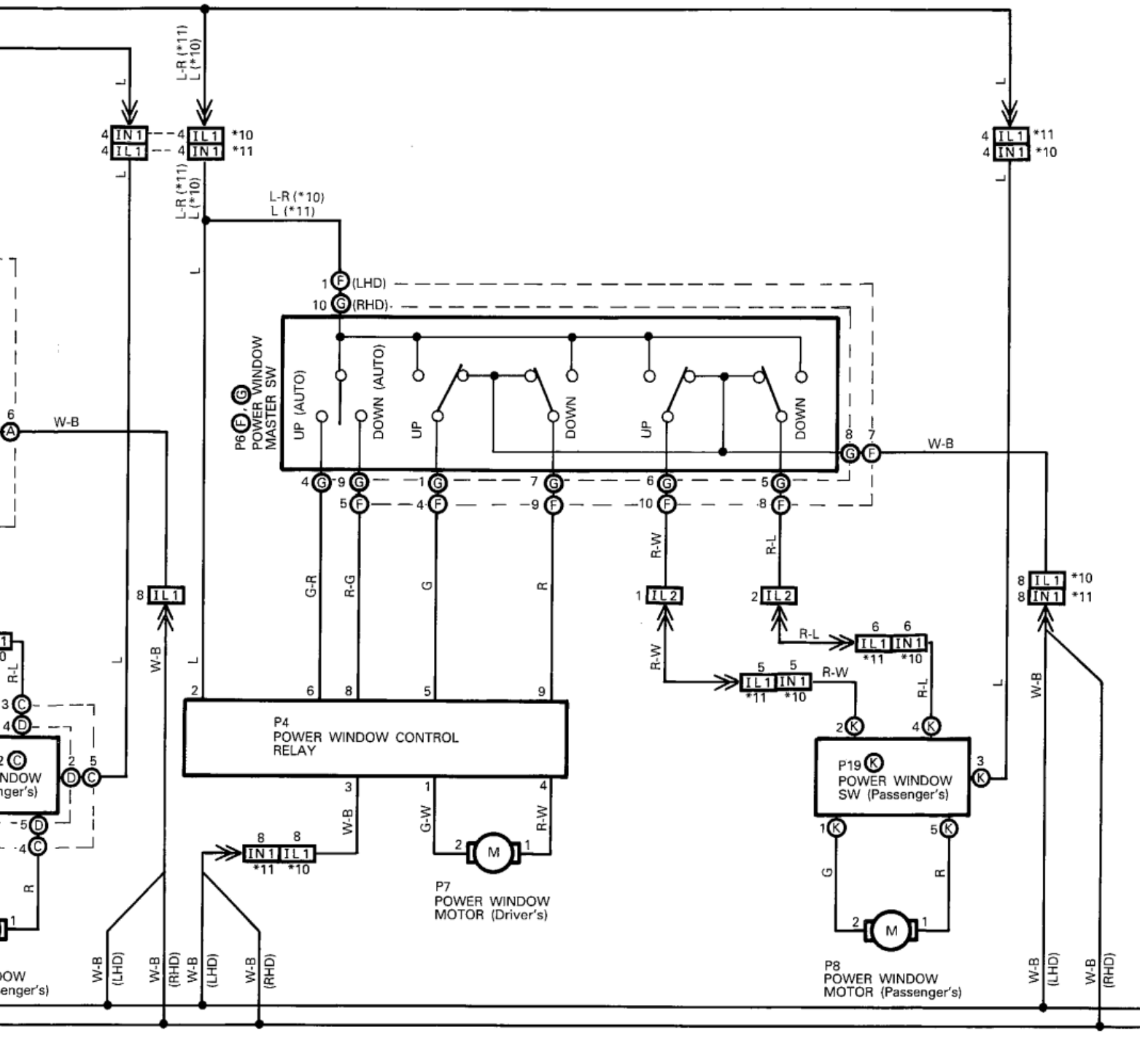
L-R (*11)
L (*10)
L-R (*10)
L (*11)
4 IN1
4 IL1
*10
*11
1 (LHD)
10 (RHD)
P6
POWER WINDOW
MASTER SW
UP (AUTO)
DOWN (AUTO)
UP
DOWN
UP
DOWN
W-B
G-R
R-G
G
R
R-W
R-L
8 IL1
1 IL2
2 IL2
P4
POWER WINDOW CONTROL
RELAY
IN1
IL1
*11
*10
G-W
R-W
P7
POWER WINDOW
MOTOR (Driver's)
P19
POWER WINDOW
SW (Passenger's)
G
R
P8
POWER WINDOW
MOTOR (Passenger's)
W-B
(LHD)
(RHD)

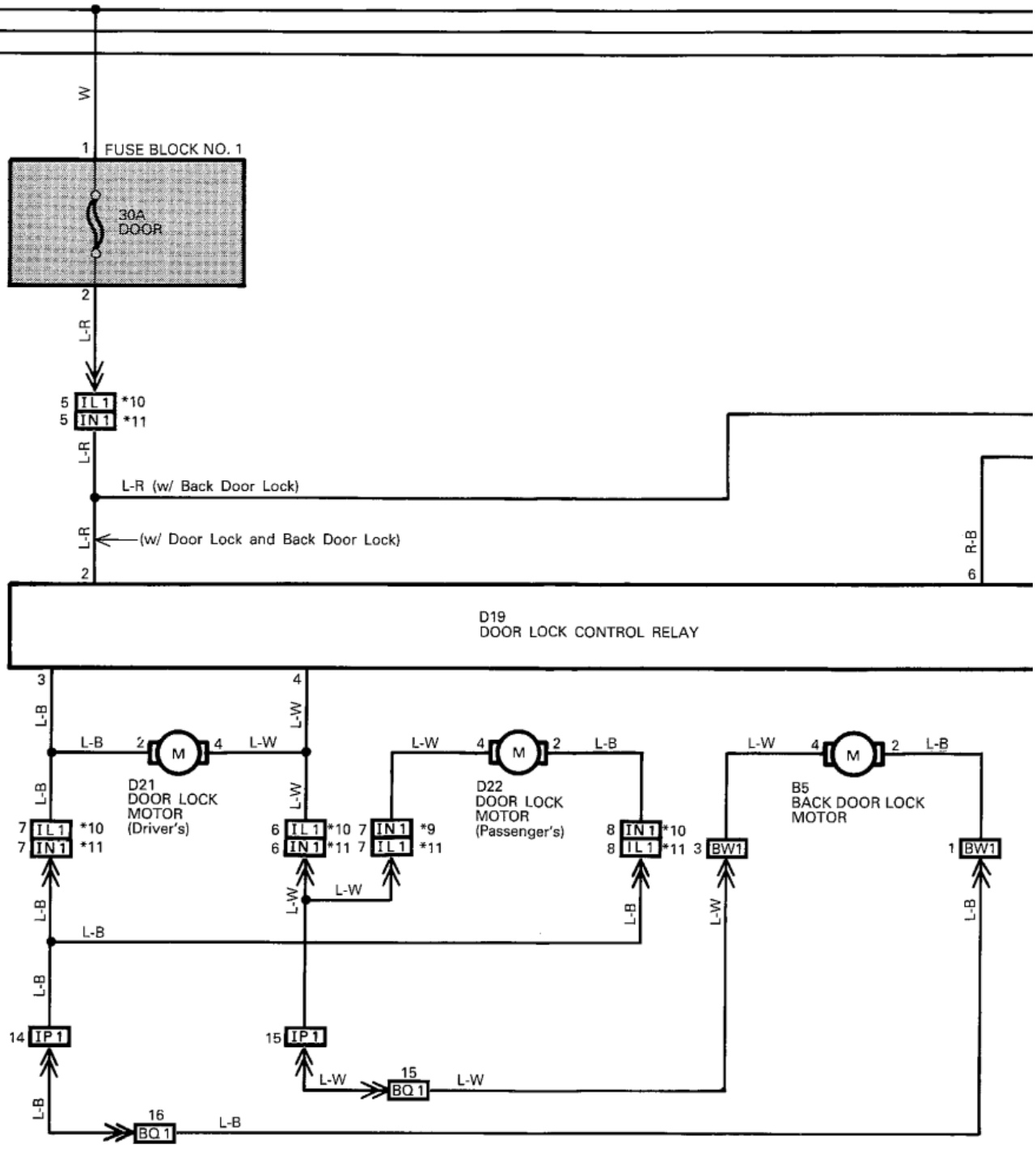
W
1
FUSE BLOCK NO. 1
30A
DOOR
2
L-R
5 IL1 *10
5 IN1 *11
L-R
L-R (w/ Back Door Lock)
L-R
(w/ Door Lock and Back Door Lock)
2
R-B
6
D19
DOOR LOCK CONTROL RELAY
3
4
L-B
L-W
M
D21
DOOR LOCK
MOTOR
(Driver's)
D22
DOOR LOCK
MOTOR
(Passenger's)
B5
BACK DOOR LOCK
MOTOR
7 IL1 *10
7 IN1 *11
6 IL1 *10
6 IN1 *11
7 IN1 *9
7 IL1 *11
8 IN1 *10
8 IL1 *11
3 BW1
1 BW1
14 IP1
15 IP1
15 BQ1
16 BQ1

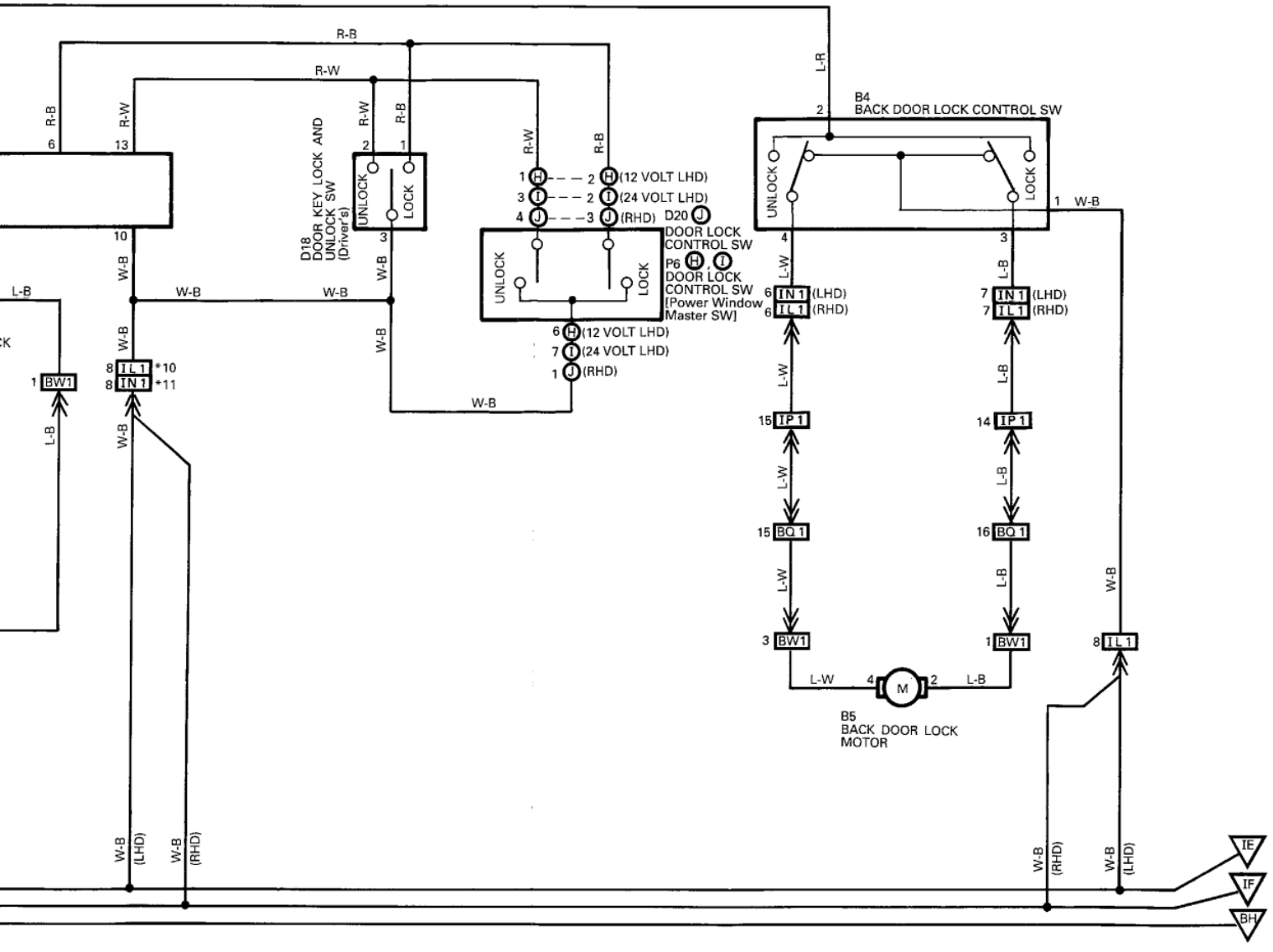
7
8
B
C
D
E
R-B
R-W
L-R
L-B
W-B
L-W
B4
BACK DOOR LOCK CONTROL SW
UNLOCK
LOCK
D18
DOOR KEY LOCK AND UNLOCK SW (Driver's)
D20
DOOR LOCK CONTROL SW
P6
DOOR LOCK CONTROL SW [Power Window Master SW]
(12 VOLT LHD)
(24 VOLT LHD)
(RHD)
(LHD)
IN 1
IL 1
IP 1
BQ 1
BW1
*10
*11
B5
BACK DOOR LOCK MOTOR
M
TE
TF
BH

Interior Light

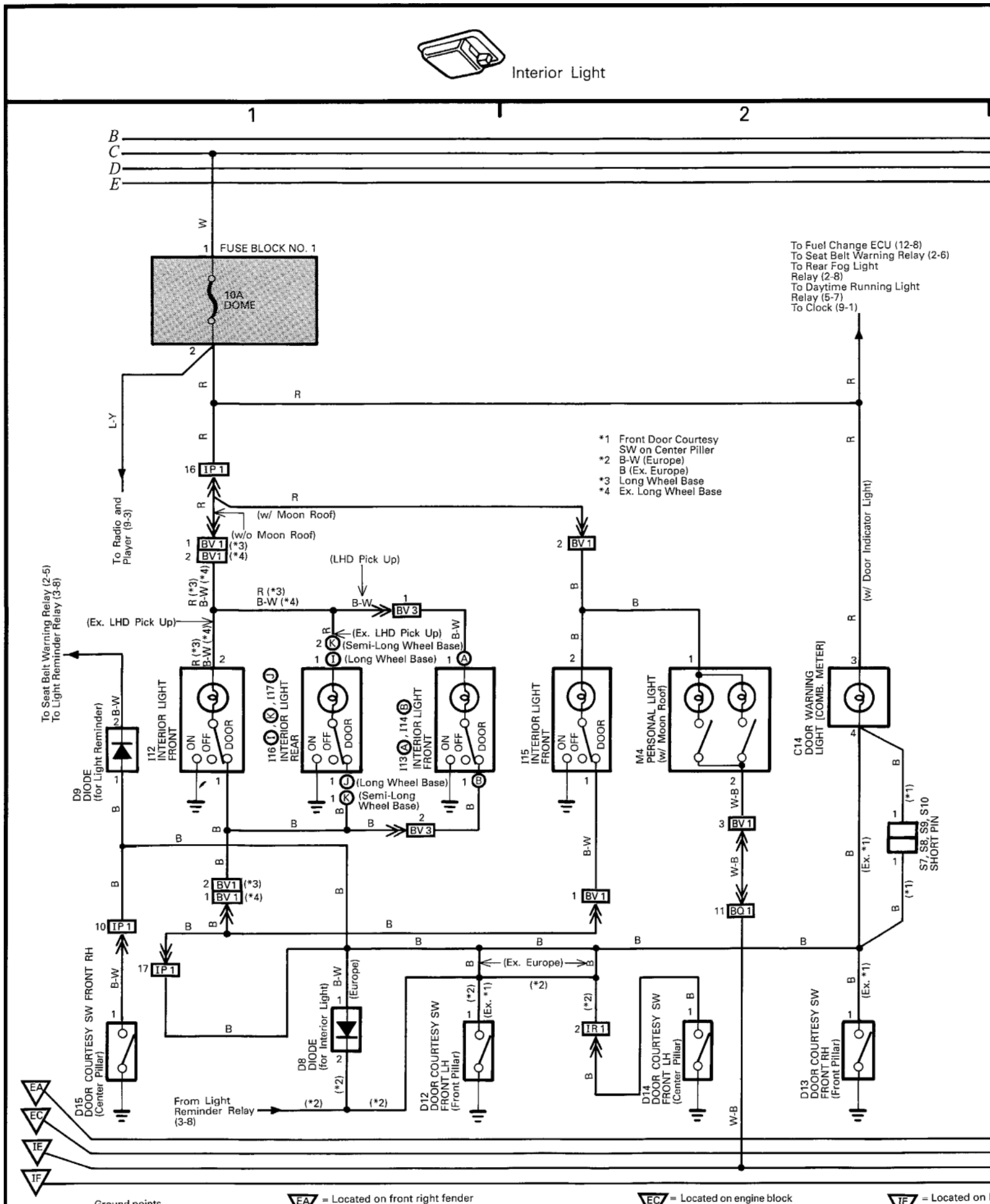

Ground points
Point à terre
Erdschlußpunkt
Punto de conexión con tierra

EA = Located on front right fender
= *Monté sur l'aile avant-droit*
= Angebracht an der Innenseite des rechten Vordersäule
= *Situado en el parachoques delantero derecho*

EC = Located on engine block
= *Monté sur le bloc-monteur*
= Angebracht am Motorblock
= *Situado en el bloque motor*

IE = Located on
= *Monté sur l*
= Angebracht ar
= *Situado en el*

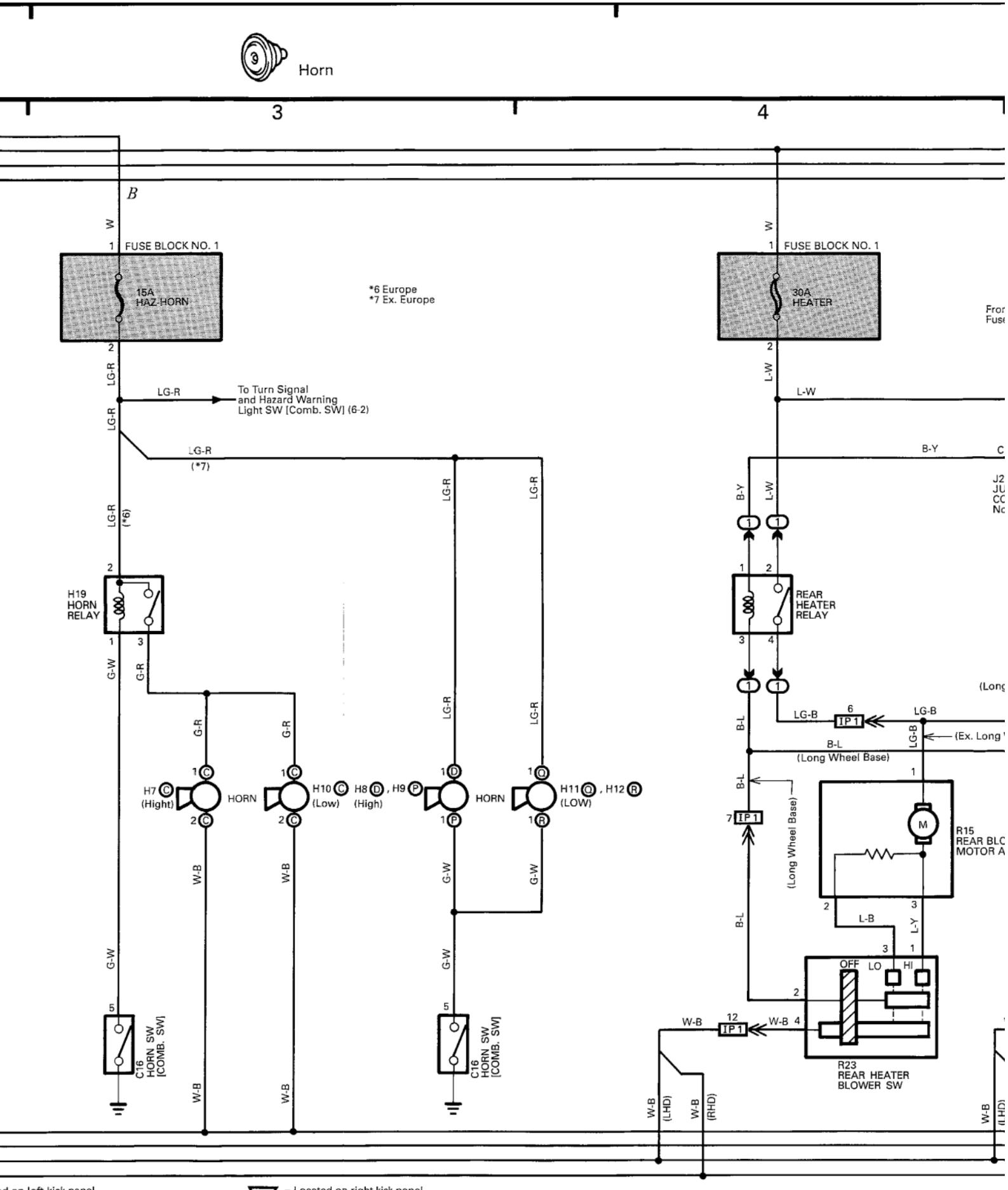

ed on left kick panel
é sur la partie gauche de tôle d'auvent
acht an der Stirnwand, links seitlich
o en el lado izquierdo del carenaje

IF = Located on right kick panel
= *Monté sur la partie droite de tôle d'auvent*
= Angebracht an der Stirnwand, rechts seitlich
= *Situado en el lado derecho del carenaje*

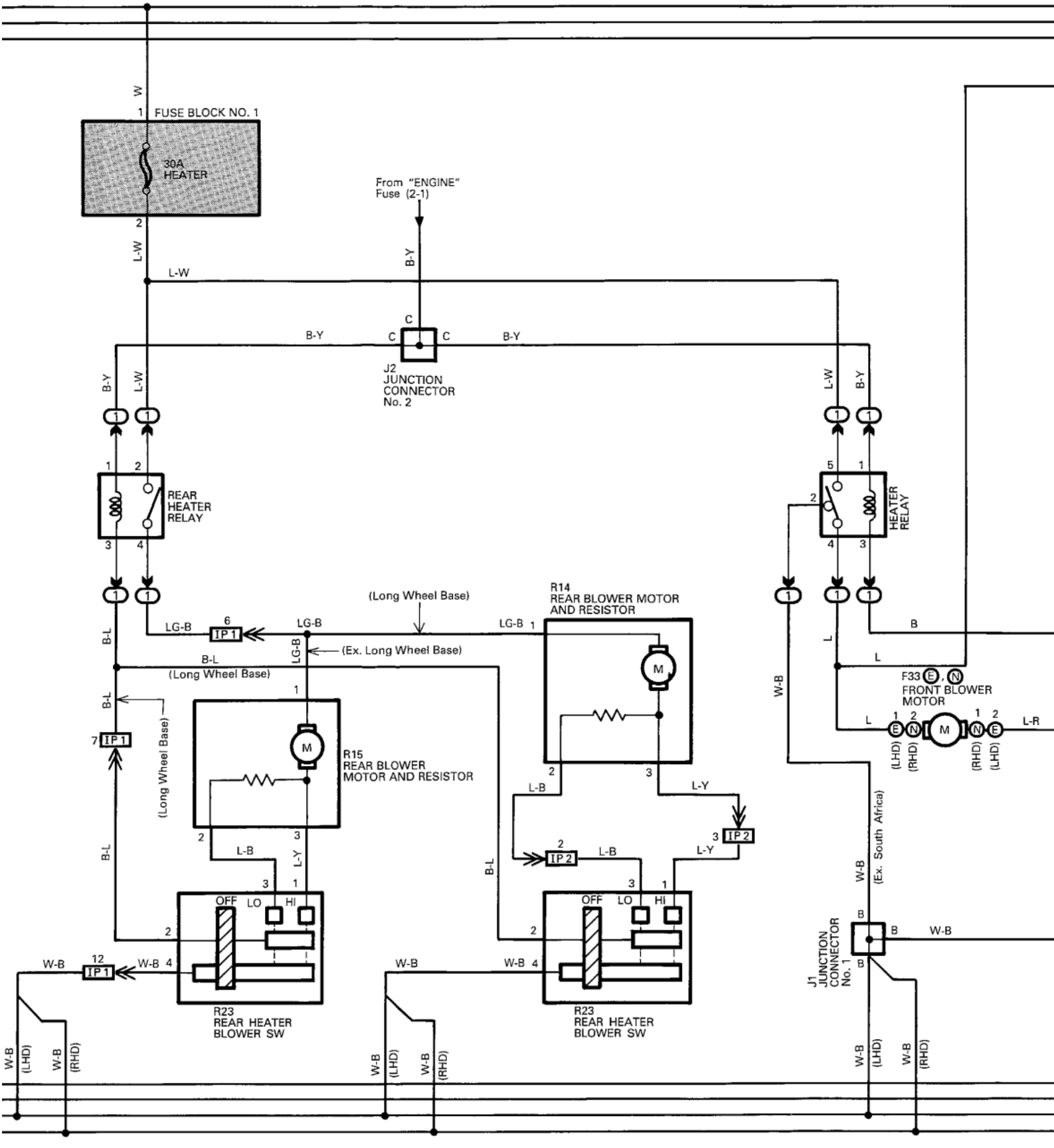
FUSE BLOCK NO. 1
30A HEATER
From "ENGINE" Fuse (2-1)
J2 JUNCTION CONNECTOR No. 2
REAR HEATER RELAY
HEATER RELAY
(Long Wheel Base)
(Ex. Long Wheel Base)
R14 REAR BLOWER MOTOR AND RESISTOR
R15 REAR BLOWER MOTOR AND RESISTOR
F33 E, N FRONT BLOWER MOTOR
(LHD)
(RHD)
R23 REAR HEATER BLOWER SW
OFF LO HI
(Ex. South Africa)
J1 JUNCTION CONNECTOR No. 1
IP 1
IP 2
W
L-W
B-Y
B-L
LG-B
L-B
L-Y
W-B
L
L-R
B

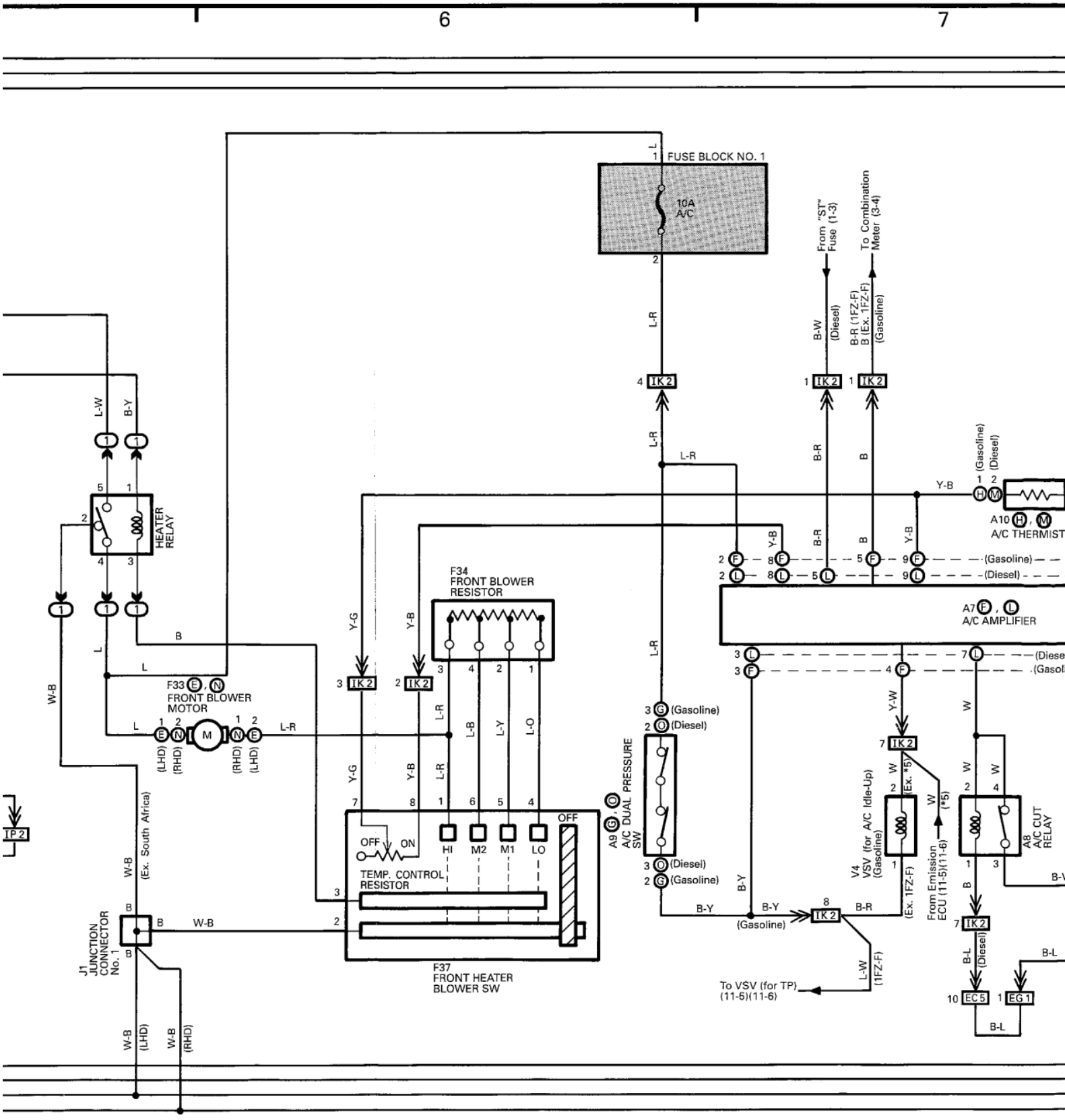
6
7
FUSE BLOCK NO. 1
10A A/C
From "ST" Fuse (1-3)
To Combination Meter (3-4)
B-W (Diesel)
B-R (1FZ-F) B (Ex. 1FZ-F) (Gasoline)
HEATER RELAY
F34 FRONT BLOWER RESISTOR
F33 E, N FRONT BLOWER MOTOR
(LHD) (RHD) (RHD) (LHD)
A10 H, M A/C THERMIST
A7 F, L A/C AMPLIFIER
A9 G, O A/C DUAL PRESSURE SW
TEMP. CONTROL RESISTOR
OFF ON
HI M2 M1 LO
F37 FRONT HEATER BLOWER SW
J1 JUNCTION CONNECTOR No. 1
(Ex. South Africa)
V4 VSV (for A/C Idle-Up) (Gasoline)
(Ex. 1FZ-F)
From Emission ECU (11-5)(11-6)
A8 A/C CUT RELAY
To VSV (for TP) (11-5)(11-6)
(Gasoline)
(Diesel)
IK2
EC5
EG1

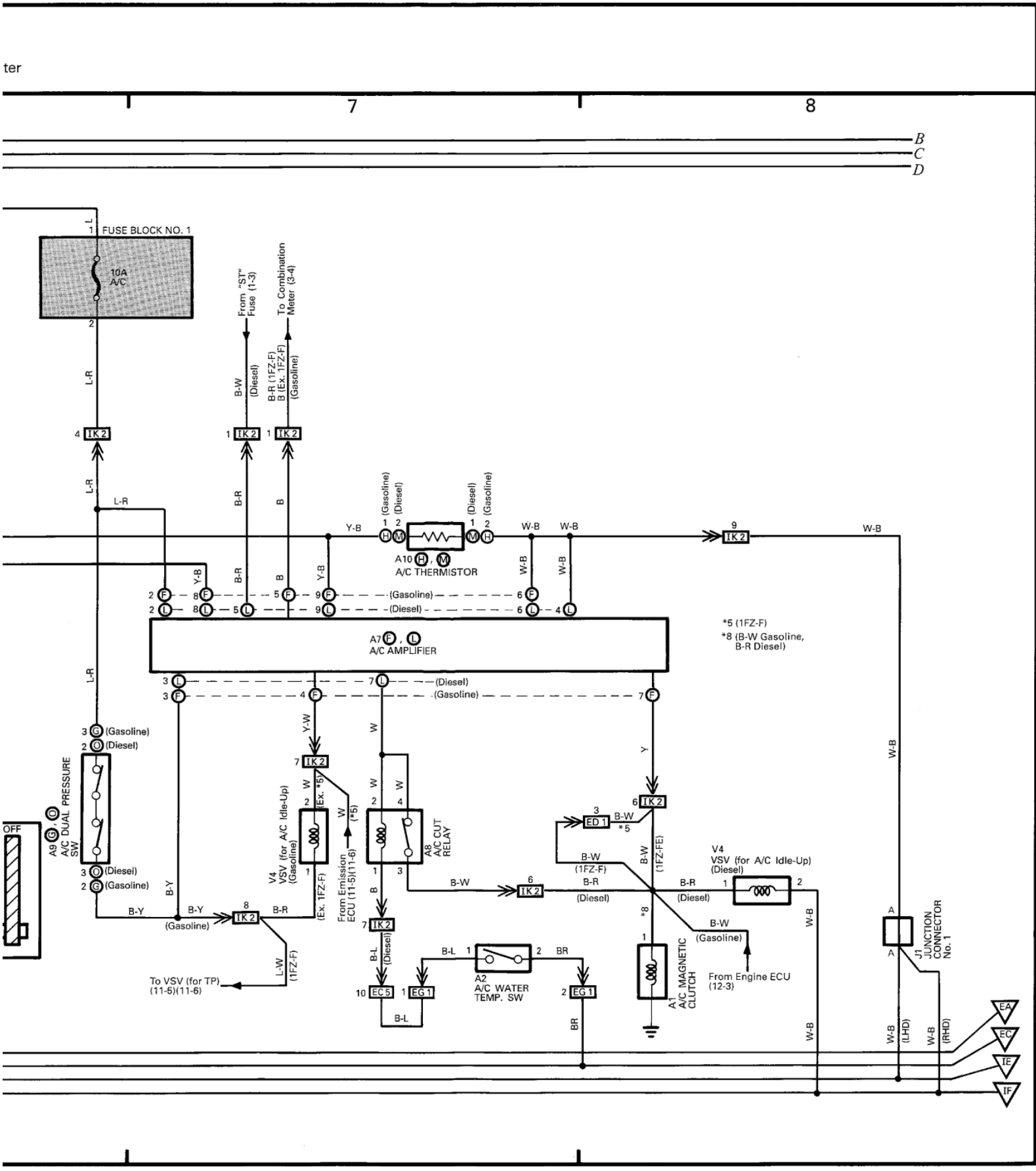

ter
7
8
B
C
D
FUSE BLOCK NO. 1
10A A/C
From "ST" Fuse (1-3)
To Combination Meter (3-4)
B-W (Diesel)
B-R (1FZ-F) B (Ex. 1FZ-F) (Gasoline)
IK2
A10 H, M A/C THERMISTOR
A7 F, L A/C AMPLIFIER
*5 (1FZ-F)
*8 (B-W Gasoline, B-R Diesel)
A9 G, O A/C DUAL PRESSURE SW
V4 VSV (for A/C Idle-Up) (Gasoline)
From Emission ECU (11-5)(11-6)
A8 A/C CUT RELAY
ED1
V4 VSV (for A/C Idle-Up) (Diesel)
A1 A/C MAGNETIC CLUTCH
From Engine ECU (12-3)
A2 A/C WATER TEMP. SW
EC5
EG1
To VSV (for TP) (11-5)(11-6)
J1 JUNCTION CONNECTOR No. 1
EA
EC
IE
IF

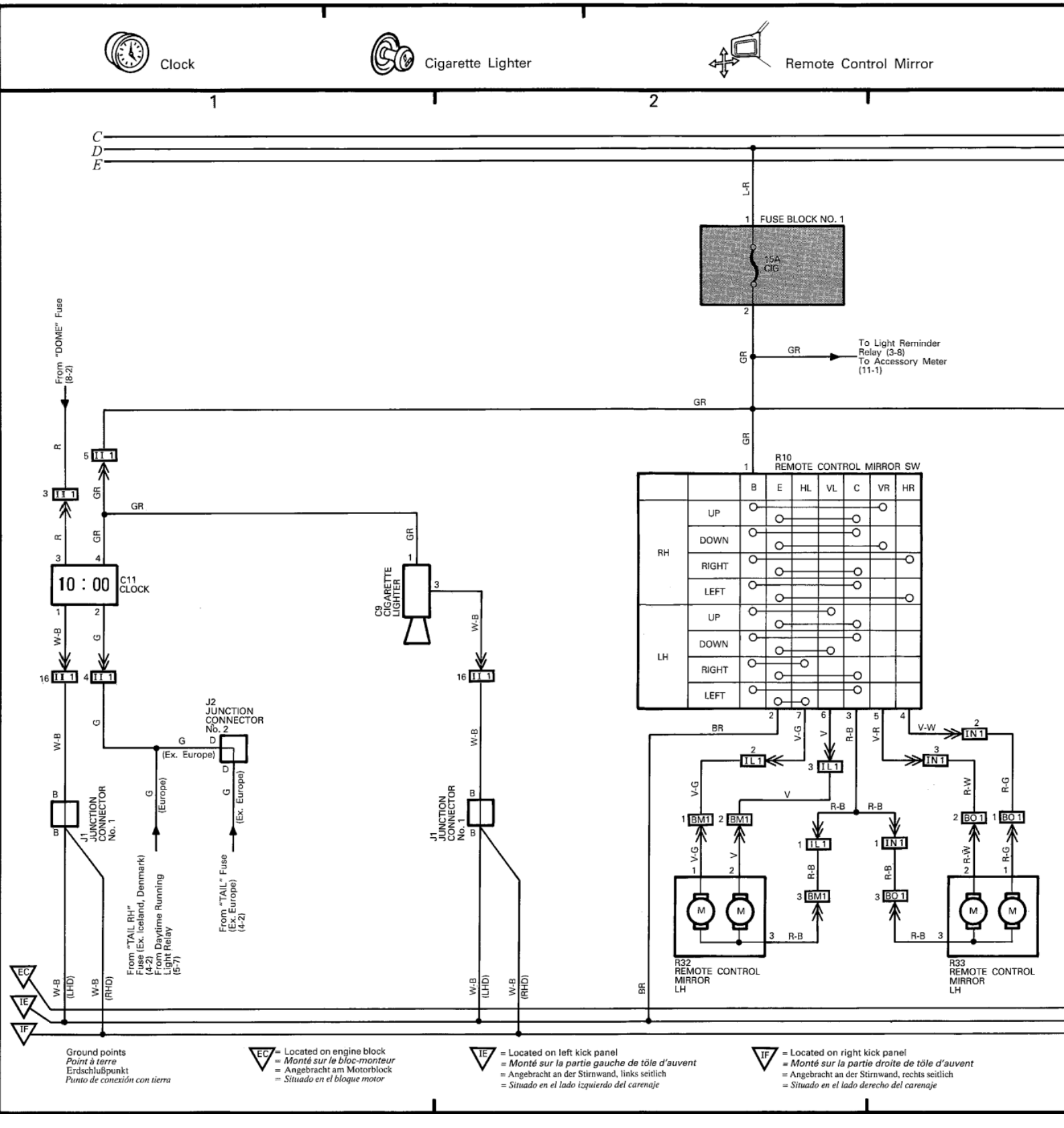
Clock
Cigarette Lighter
Remote Control Mirror
1
2
C
D
E
L-R
1
FUSE BLOCK NO. 1
15A
CIG
2
GR
GR
To Light Reminder Relay (3-8)
To Accessory Meter (11-1)
GR
GR
From "DOME" Fuse (8-2)
R
5
I I 1
3
I I 1
GR
GR
R
GR
3
4
10 : 00
C11
CLOCK
1
2
W-B
G
16
I I 1
4
I I 1
G
J2
JUNCTION
CONNECTOR
No. 2
G
D
(Ex. Europe)
D
G
(Ex. Europe)
W-B
B
B
J1
JUNCTION
CONNECTOR
No. 1
G
(Europe)
From "TAIL RH" Fuse (Ex. Iceland, Denmark) (4-2)
From Daytime Running Light Relay (5-7)
From "TAIL" Fuse (Ex. Europe) (4-2)
C9
CIGARETTE
LIGHTER
GR
1
3
W-B
16
I I 1
W-B
B
B
J1
JUNCTION
CONNECTOR
No. 1
W-B
(LHD)
W-B
(RHD)
W-B
(LHD)
W-B
(RHD)
R10
REMOTE CONTROL MIRROR SW
B
E
HL
VL
C
VR
HR
RH
UP
DOWN
RIGHT
LEFT
LH
UP
DOWN
RIGHT
LEFT
2
7
6
3
5
4
BR
V-G
V
R-B
V-R
V-W
2
I L 1
3
I L 1
3
I N 1
2
I N 1
V-G
V
R-B
R-B
R-W
R-G
1
BM1
2
BM1
1
I L 1
1
I N 1
2
BO 1
1
BO 1
V-G
V
R-B
R-B
R-W
R-G
1
2
3
M
M
3
BM1
3
BO 1
2
1
M
M
R-B
3
R-B
3
R32
REMOTE CONTROL
MIRROR
LH
R33
REMOTE CONTROL
MIRROR
LH
BR
EC
IE
IF
Ground points
Point à terre
Erdschlußpunkt
Punto de conexión con tierra
EC = Located on engine block
= Monté sur le bloc-monteur
= Angebracht am Motorblock
= Situado en el bloque motor
IE = Located on left kick panel
= Monté sur la partie gauche de tôle d'auvent
= Angebracht an der Stirnwand, links seitlich
= Situado en el lado izquierdo del carenaje
IF = Located on right kick panel
= Monté sur la partie droite de tôle d'auvent
= Angebracht an der Stirnwand, rechts seitlich
= Situado en el lado derecho del carenaje

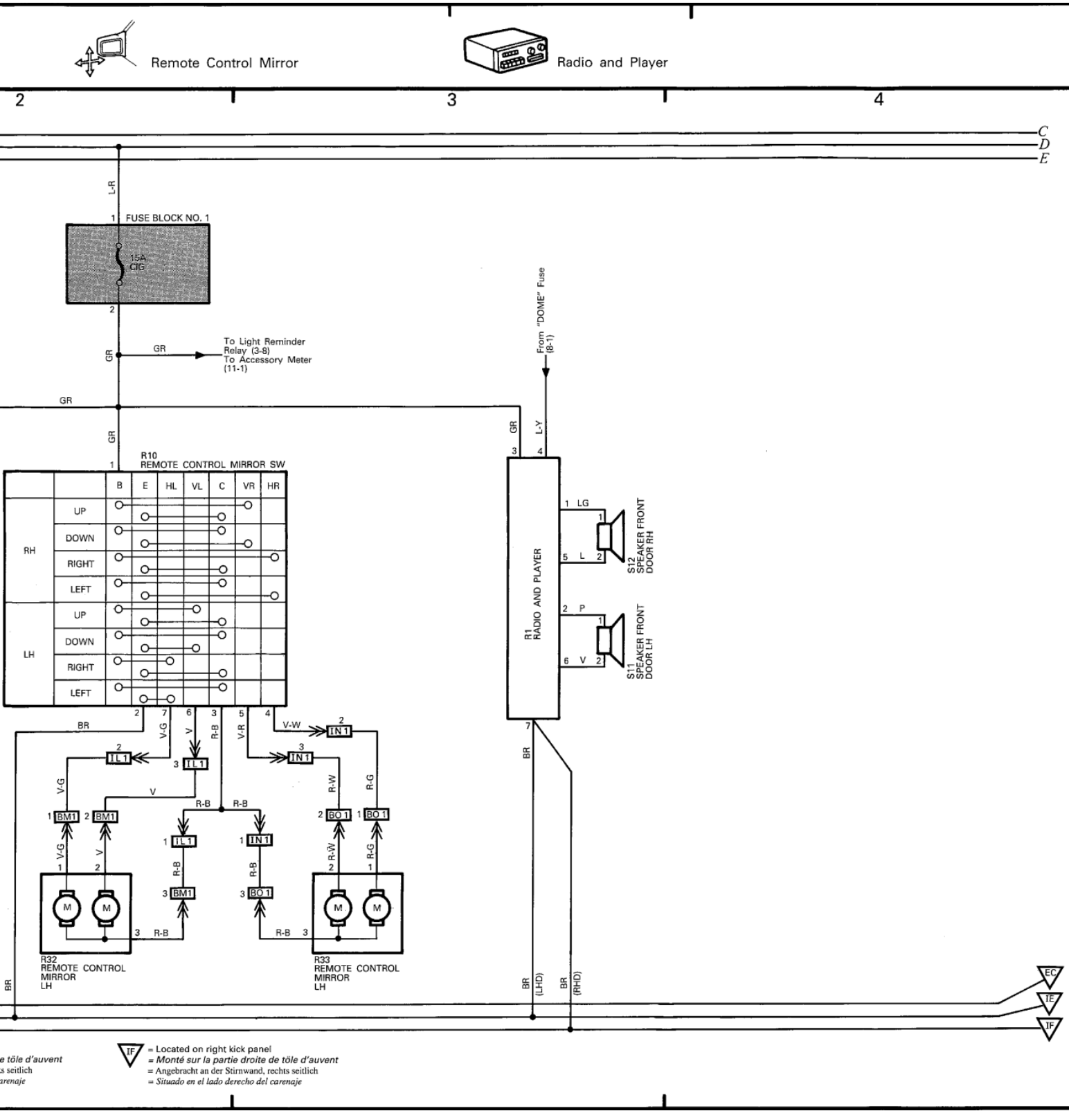
Remote Control Mirror
Radio and Player
2
3
4
C
D
E
L-R
1 FUSE BLOCK NO. 1
15A CIG
2
GR
GR
To Light Reminder Relay (3-8)
To Accessory Meter (11-1)
From "DOME" Fuse (8-1)
GR
L-Y
R10
REMOTE CONTROL MIRROR SW
B E HL VL C VR HR
RH
UP
DOWN
RIGHT
LEFT
LH
UP
DOWN
RIGHT
LEFT
R1
RADIO AND PLAYER
1 LG
5 L
S12
SPEAKER FRONT DOOR RH
2 P
6 V
S11
SPEAKER FRONT DOOR LH
BR
V-G
V
R-B
V-R
V-W
R-W
R-G
IL 1
IN 1
BM1
BO 1
M
R32
REMOTE CONTROL MIRROR LH
R33
REMOTE CONTROL MIRROR LH
BR (LHD)
BR (RHD)
EC
TE
TF
TF = Located on right kick panel
= Monté sur la partie droite de tôle d'auvent
= Angebracht an der Stirnwand, rechts seitlich
= Situado en el lado derecho del carenaje

C
D
E

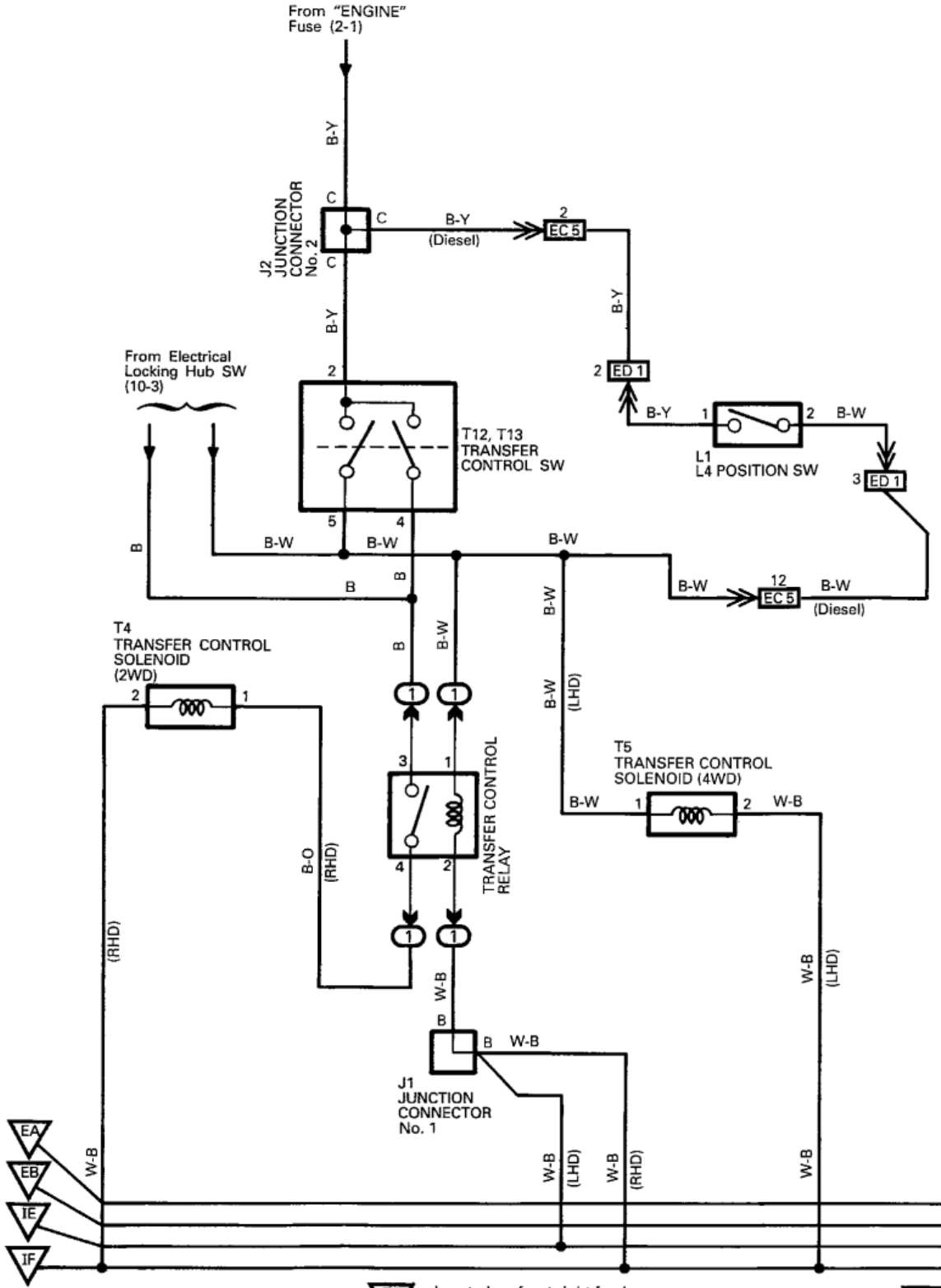

Ground points
Point à terre
Erdschlußpunkt
Punto de conexión con tierra

EA = Located on front right fender
= *Monté sur l'aile avant-droit*
= Angebracht an der Innenseite des rechten Vordersäule
= *Situado en el parachoques delantero derecho*

EB = Located on front left fender
= *Monté sur l'aile avant-gauche*
= Angebracht an der Innenseite des linken Vo
= *Situado en el parachoques delantero izquie*

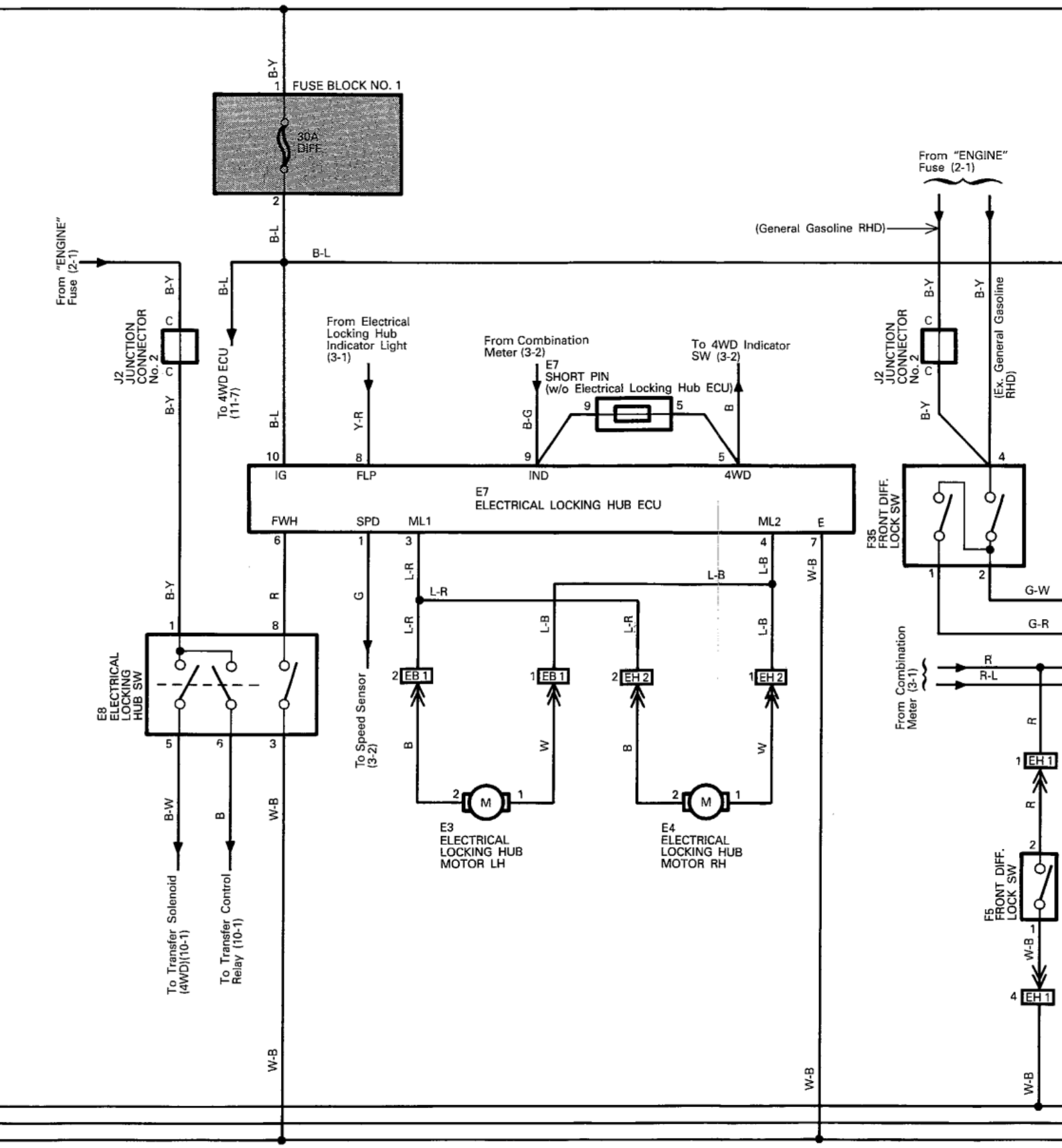

IE = Located on left kick panel
= *Monté sur la partie gauche de tôle d'auvent*
= Angebracht an der Stirnwand, links seitlich
= *Situado en el lado izquierdo del carenaje*

IF = Located on right kick panel
= *Monté sur la partie droite de tôle d'auvent*
= Angebracht an der Stirnwand, rechts seitlich
= *Situado en el lado derecho del carenaje*

BH = Located on lower back
= *Monté sur le panneau*
= Angebracht an der Innens
= *Situado en el panel interi*

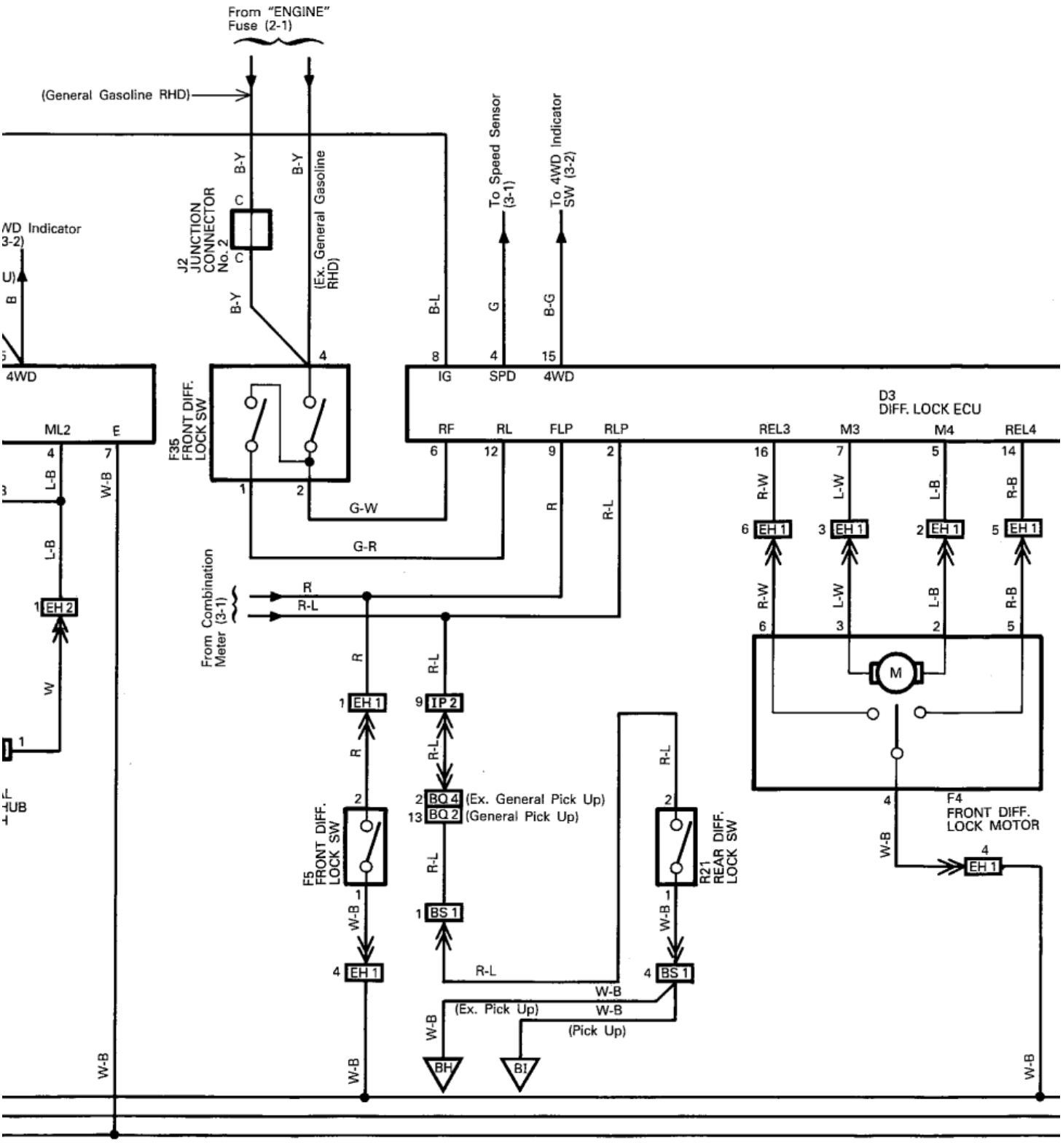

BH = Located on lower back panel inner
= *Monté sur le panneau intérieur de la porte arrière*
= Angebracht an der Innenseite der Hekklappe
= *Situado en el panel interior de la puerta trasera*

BI = Located on cross member frame
= *Monté sur la traverse*
= Angebracht am Querträgerrahmen
= *Situado en el marco del travesaño*

C
D
E

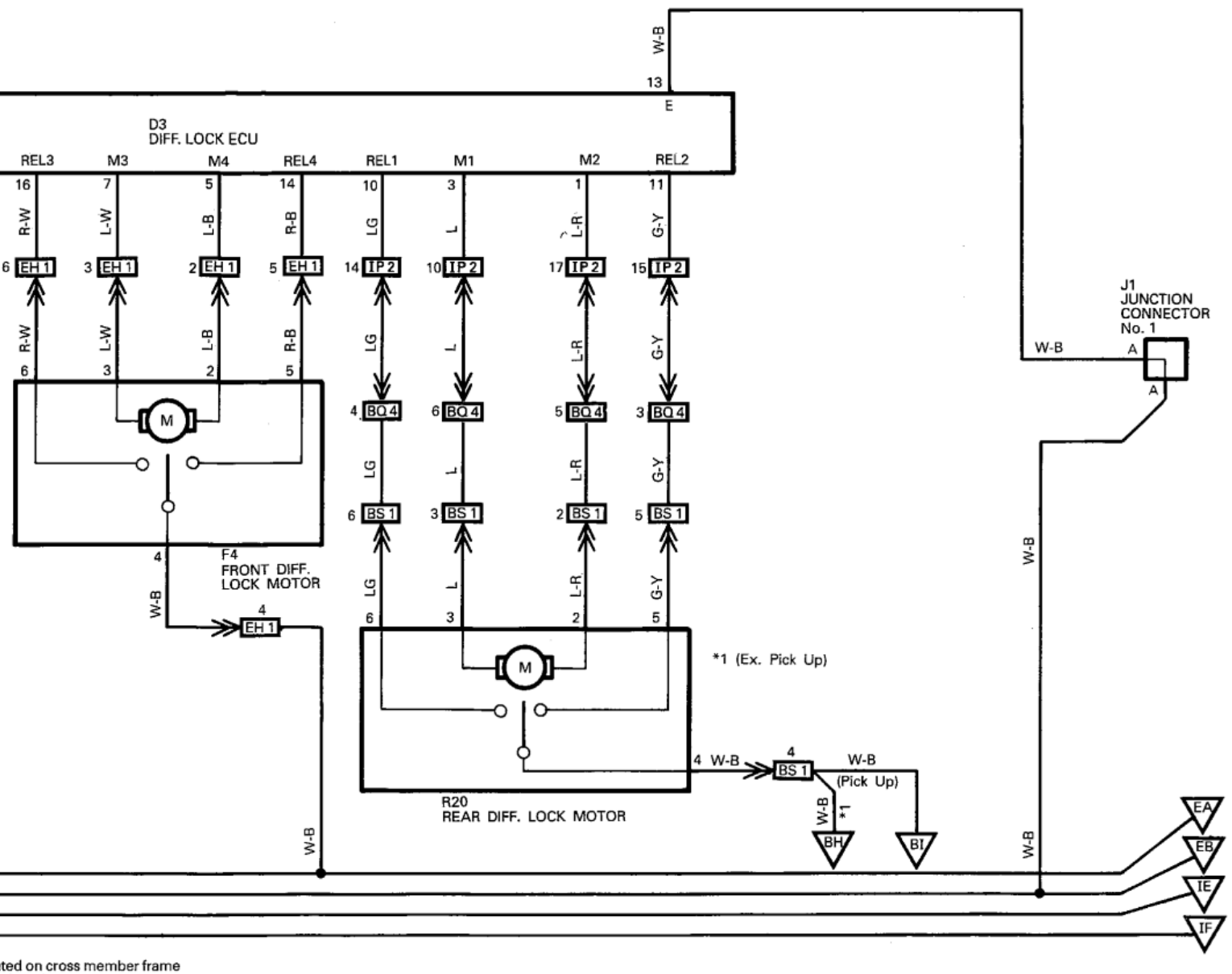

ted on cross member frame
té sur la traverse
ebracht am Querträgerrahmen
do en el marco del travesaño

C
D
E

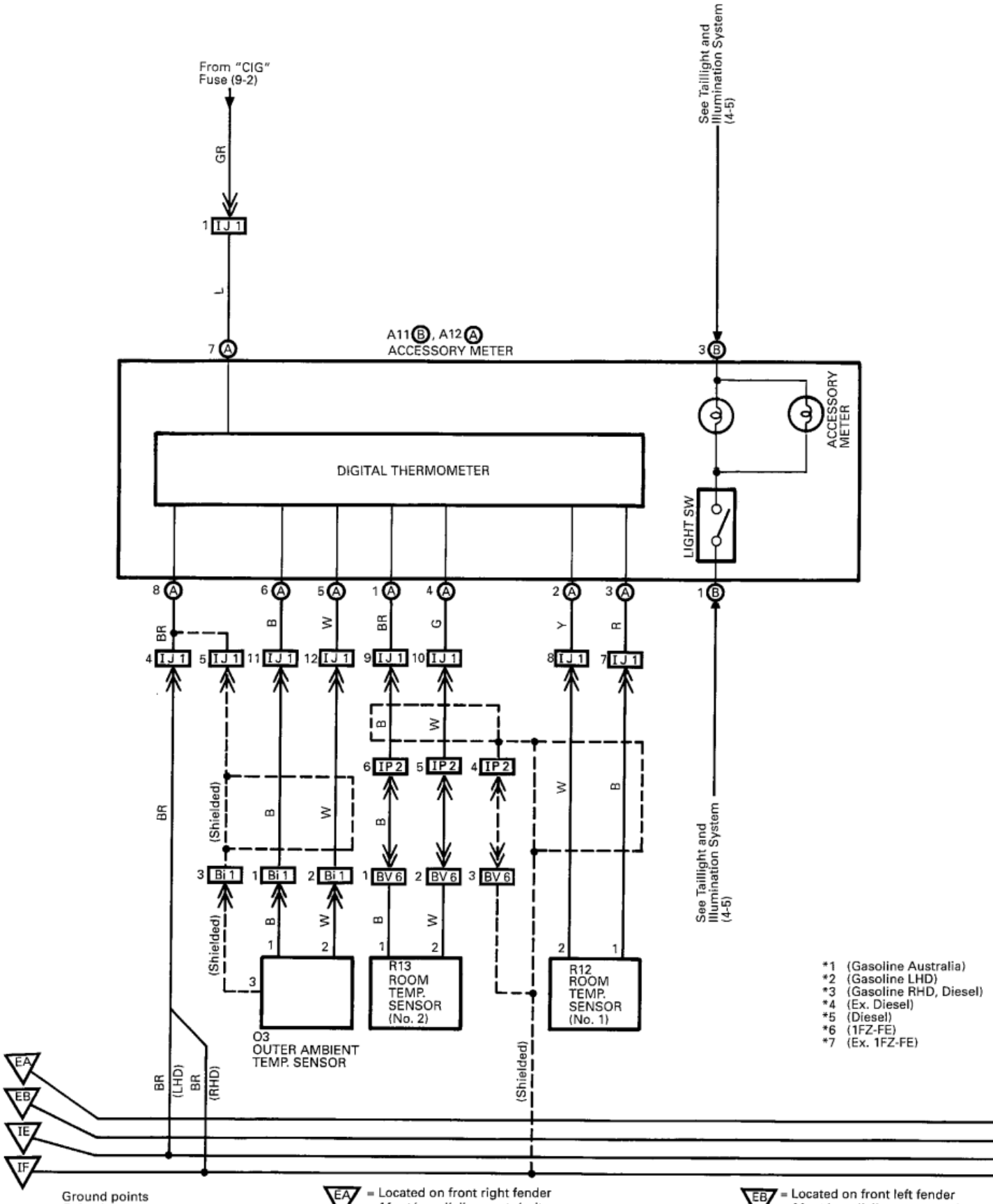

*1 (Gasoline Australia)
*2 (Gasoline LHD)
*3 (Gasoline RHD, Diesel)
*4 (Ex. Diesel)
*5 (Diesel)
*6 (1FZ-FE)
*7 (Ex. 1FZ-FE)

Ground points
Point à terre
Erdschlußpunkt
Punto de conexión con tierra

EA = Located on front right fender
= *Monté sur l'aile avant-droit*
= Angebracht an der Innenseite des rechten Vordersäule
= *Situado en el parachoques delantero derecho*

EB = Located on front left fender
= *Monté sur l'aile avant-gauche*
= Angebracht an der Innenseite des linken Vordersäule
= *Punto de conexión con tierra*

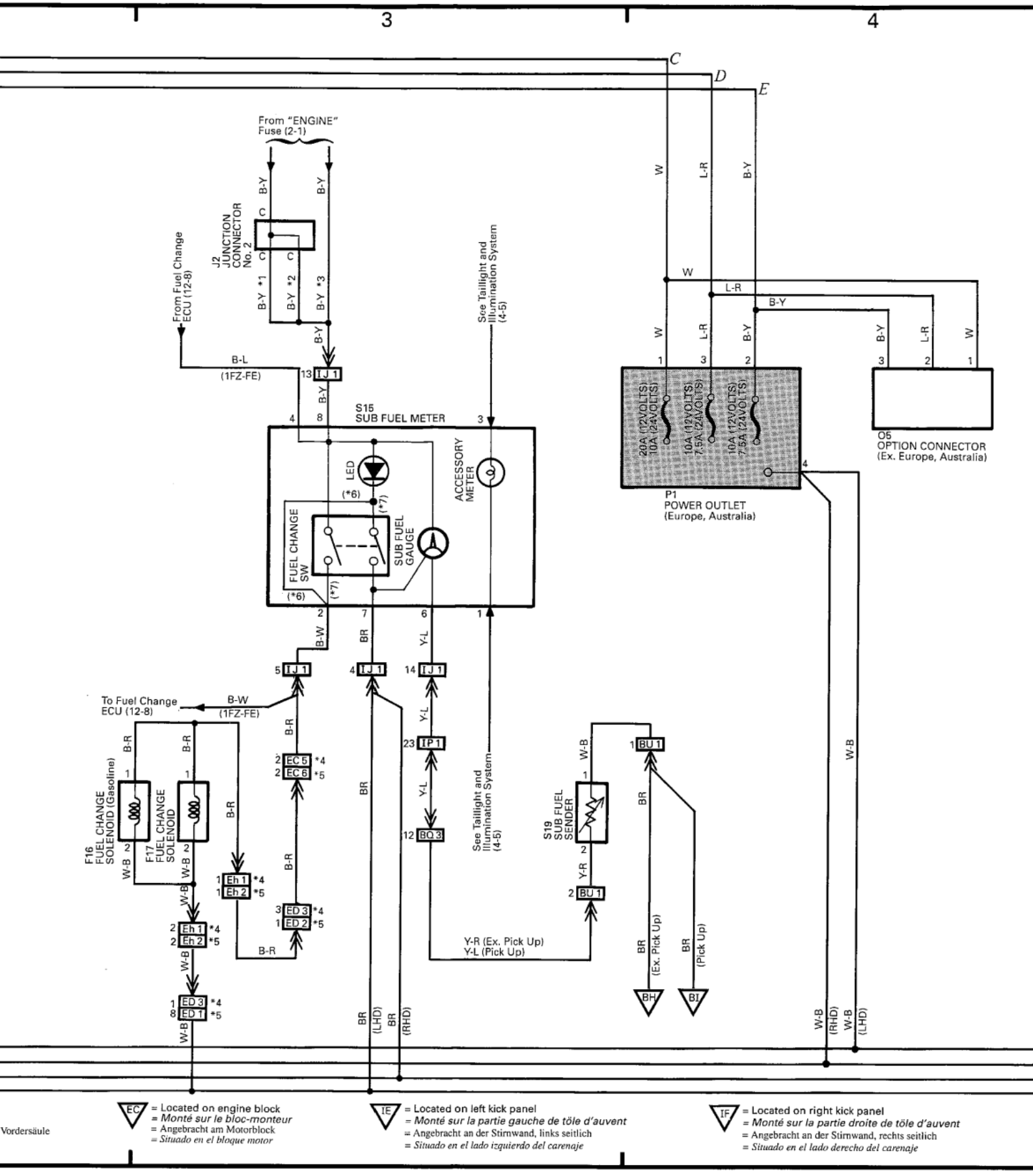

Vordersäule

5 6

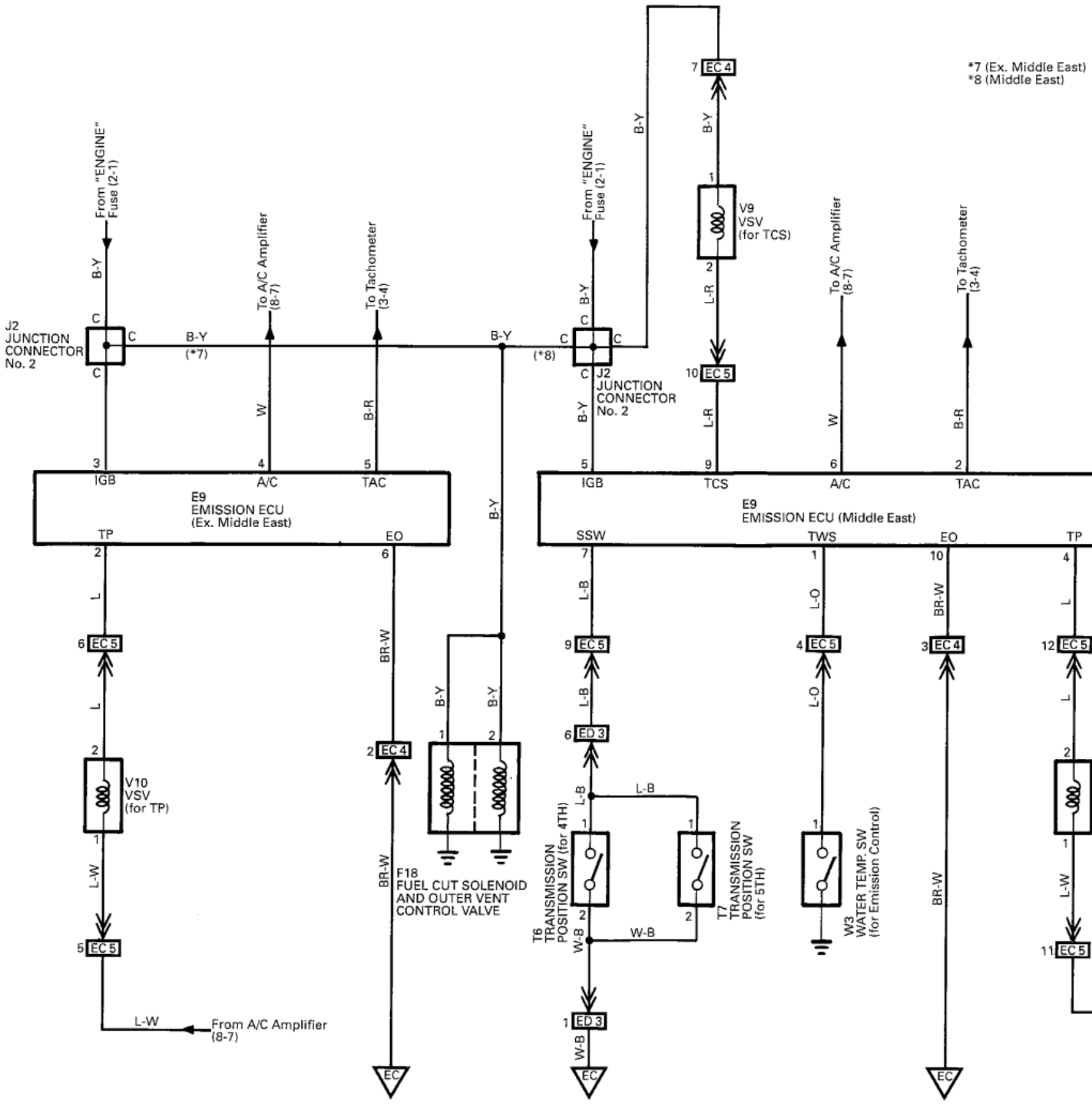

ated on lower back panel inner
nté sur le panneau intérieur de la porte arrière
ebracht an der Innenseite der Hekklappe
ado en el panel interior de la puerta trasera

BT = Located on cross member frame
= Monté sur la traverse
= Angebracht am Querträgerrahmen
= Situado en el marco del traversaño

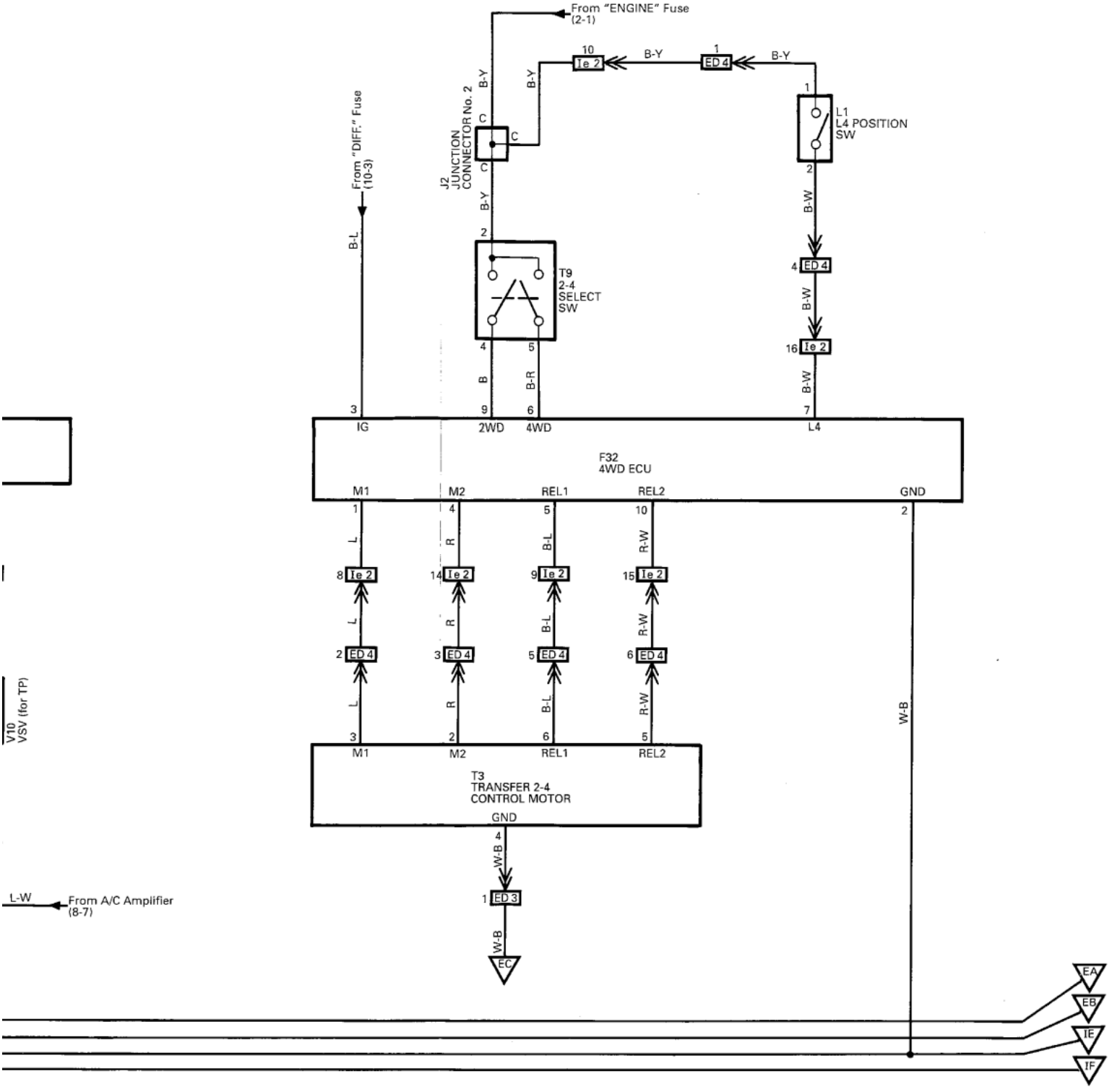
From "ENGINE" Fuse (2-1)
10 Ie 2
B-Y
1 ED 4
B-Y
1
L1
L4 POSITION SW
2
B-W
4 ED 4
B-W
16 Ie 2
B-W
7
L4
B-Y
B-Y
J2
JUNCTION CONNECTOR No. 2
C
C
C
From "DIFF." Fuse (10-3)
B-L
3
IG
B-Y
2
T9
2-4 SELECT SW
4
B
9
2WD
5
B-R
6
4WD
F32
4WD ECU
M1
M2
REL1
REL2
GND
1
L
8 Ie 2
L
2 ED 4
L
3
M1
4
R
14 Ie 2
R
3 ED 4
R
2
M2
5
B-L
9 Ie 2
B-L
5 ED 4
B-L
6
REL1
10
R-W
15 Ie 2
R-W
6 ED 4
R-W
5
REL2
2
W-B
T3
TRANSFER 2-4 CONTROL MOTOR
GND
4
W-B
1 ED 3
W-B
EC
V10
VSV (for TP)
L-W
From A/C Amplifier (8-7)
EA
EB
IE
IF

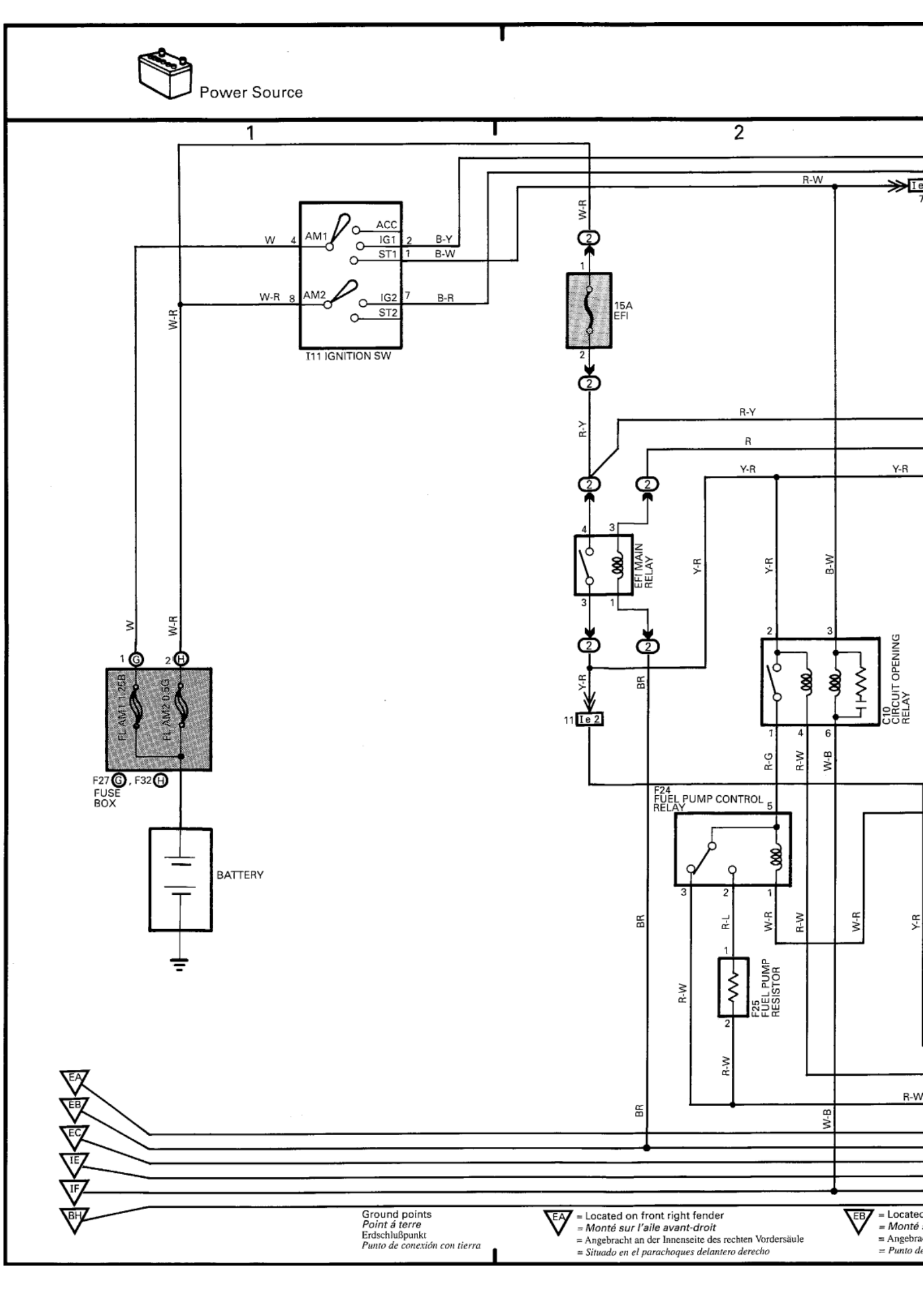

Ground points
Point á terre
Erdschlußpunkt
Punto de conexión con tierra

EA = Located on front right fender
= *Monté sur l'aile avant-droit*
= Angebracht an der Innenseite des rechten Vordersäule
= *Situado en el parachoques delantero derecho*

EB = Located
= *Monté*
= Angebra
= *Punto de*

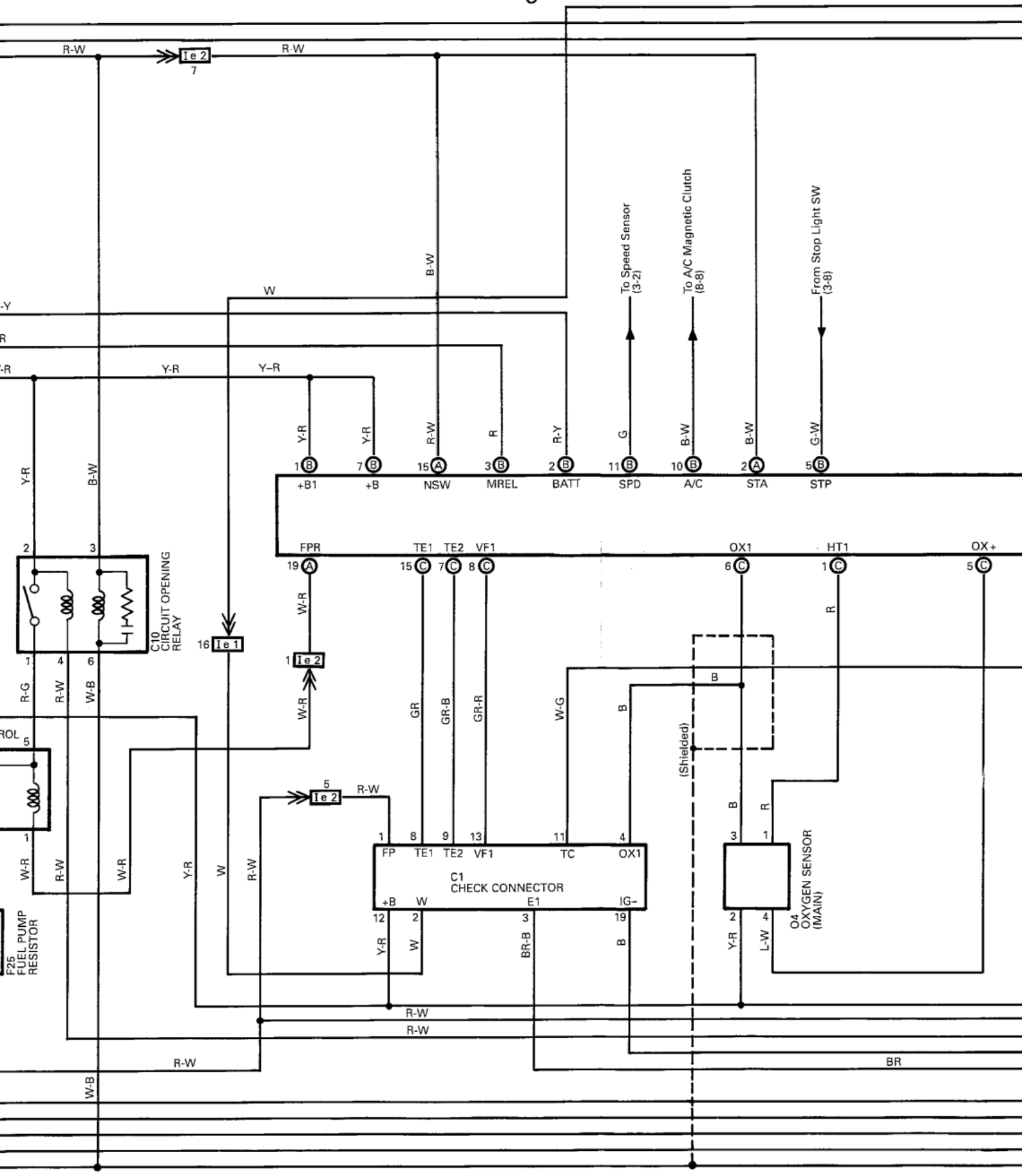

EB = Located on front left fender
= *Monté sur l'aile avant-gauche*
= Angebracht an der Innenseite des linken Vordersäule
= *Punto de conexión con tierra*

EC = Located on engine block
= *Monté sur le bloc-monteur*
= Angebracht am Motorblock
= *Situado en el bloque motor*

IE = Located on left kick panel
= *Monté sur la partie gauche de tôle d'auvent*
= Angebracht an der Stirnwand, links seilich
= *Situado en el lado izquierdo del carenaje*

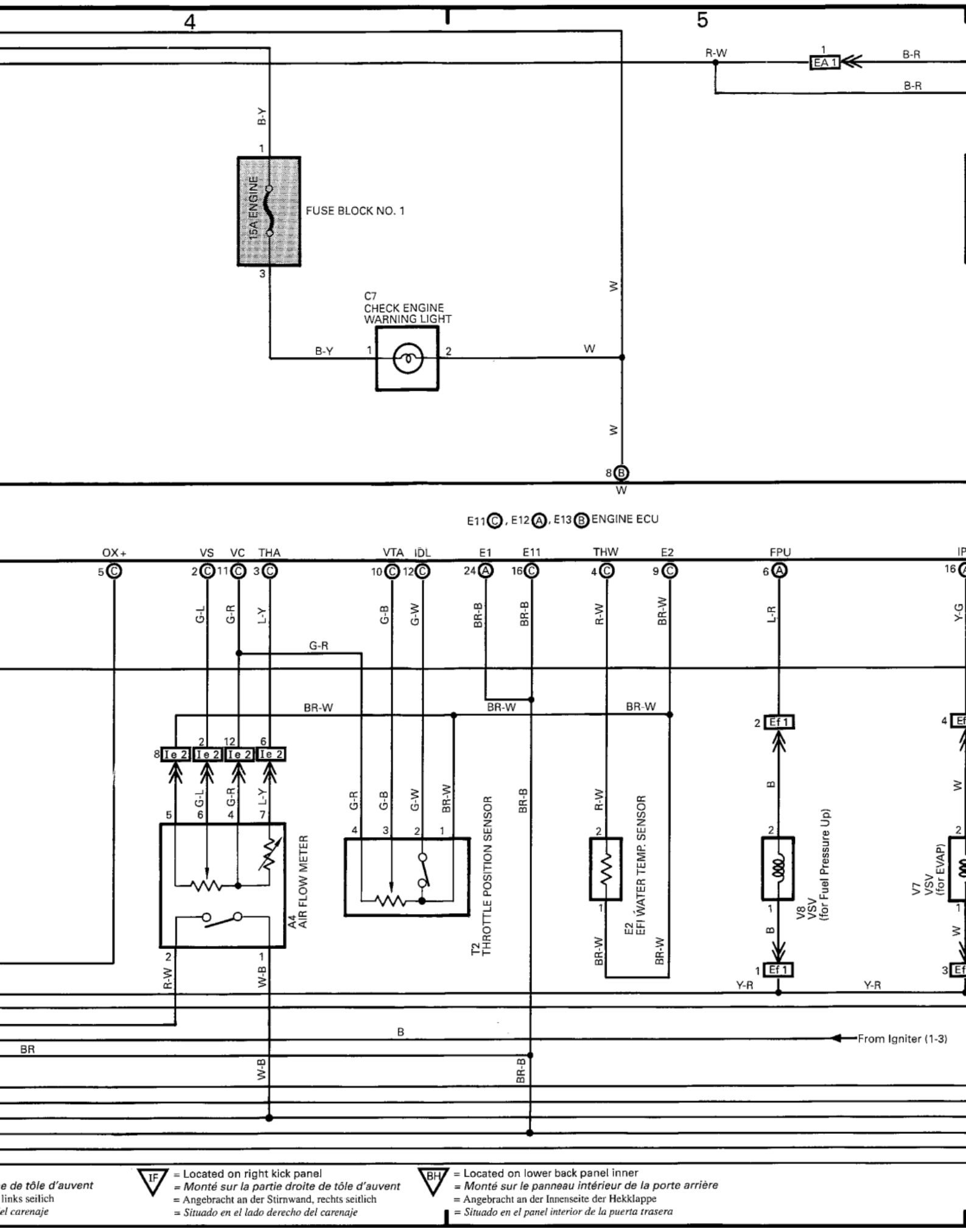

e de tôle d'auvent
links seitlich
el carenaje

IF = Located on right kick panel
= Monté sur la partie droite de tôle d'auvent
= Angebracht an der Stirnwand, rechts seitlich
= Situado en el lado derecho del carenaje

BH = Located on lower back panel inner
= Monté sur le panneau intérieur de la porte arrière
= Angebracht an der Innenseite der Hekklappe
= Situado en el panel interior de la puerta trasera

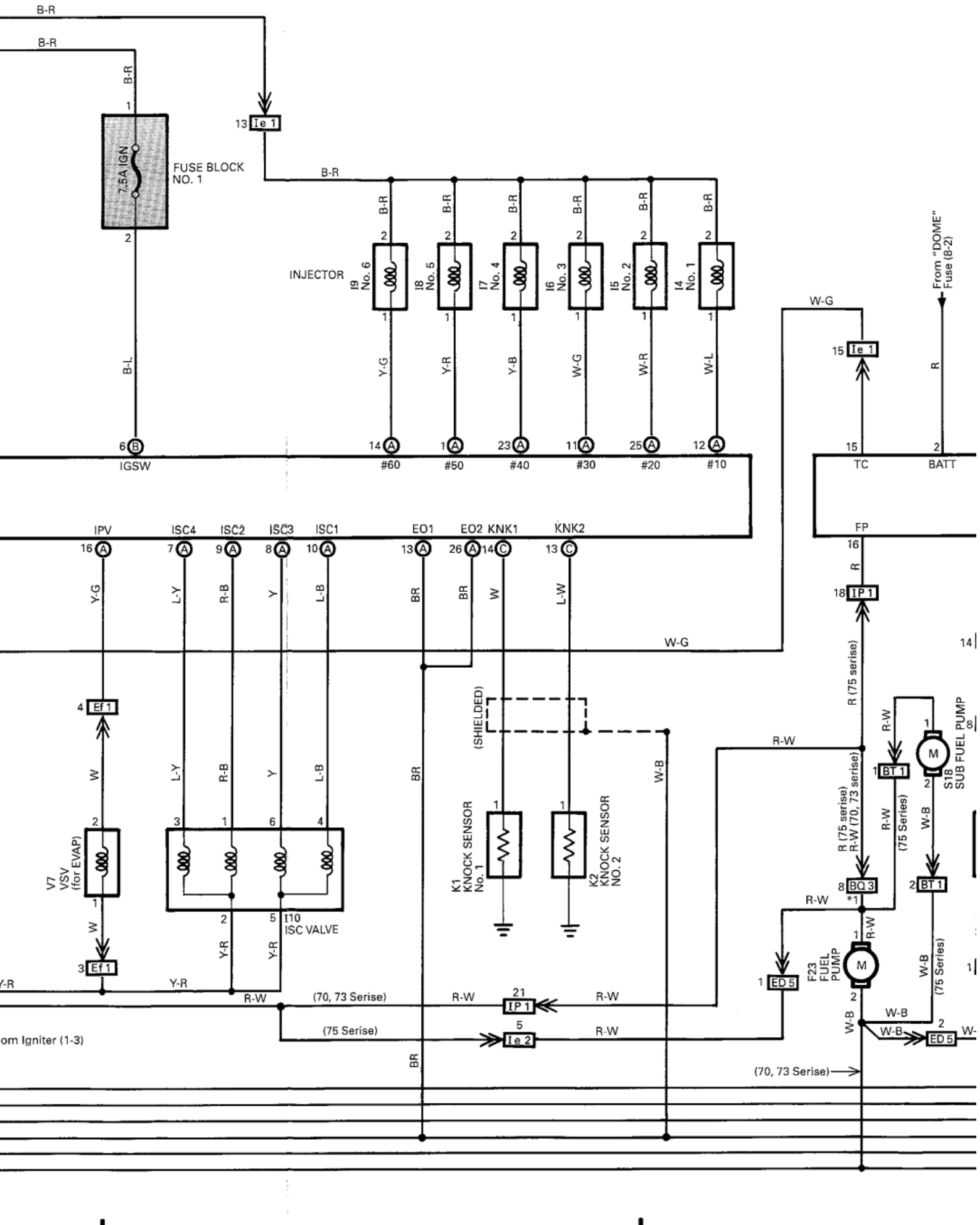
B-R
B-R
B-R
1
7.5A IGN
2
FUSE BLOCK NO. 1
13 Ie 1
B-R
B-L
6 B
IGSW
INJECTOR
I9 No. 6
I8 No. 5
I7 No. 4
I6 No. 3
I5 No. 2
I4 No. 1
Y-G
Y-R
Y-B
W-G
W-R
W-L
14 A
1 A
23 A
11 A
25 A
12 A
#60
#50
#40
#30
#20
#10
From "DOME" Fuse (8-2)
W-G
15 Ie 1
R
15
2
TC
BATT
FP
16
R
18 IP 1
IPV
ISC4
ISC2
ISC3
ISC1
EO1
EO2
KNK1
KNK2
16 A
7 A
9 A
8 A
10 A
13 A
26 A
14 C
13 C
Y-G
L-Y
R-B
Y
L-B
BR
BR
W
L-W
W-G
R (75 serise)
4 Ef 1
W
2
V7 VSV (for EVAP)
1
W
3 Ef 1
3
1
6
4
2
5
I10 ISC VALVE
Y-R
Y-R
(SHIELDED)
BR
W-B
1
K1 KNOCK SENSOR No. 1
1
K2 KNOCK SENSOR NO. 2
R-W
R-W
1 BT 1
M
1
2
S18 SUB FUEL PUMP
R (75 serise)
R-W (70, 73 serise)
R-W
(75 Series)
W-B
8 BQ 3
*1
2 BT 1
R-W
1
R-W
1 ED 5
F23 FUEL PUMP
M
2
W-B
(75 Series)
W-B
W-B
W-B
2
ED 5
(70, 73 Serise)
Y-R
Y-R
R-W
(70, 73 Serise)
R-W
21 IP 1
R-W
(75 Serise)
5 Ie 2
R-W
BR
om Igniter (1-3)

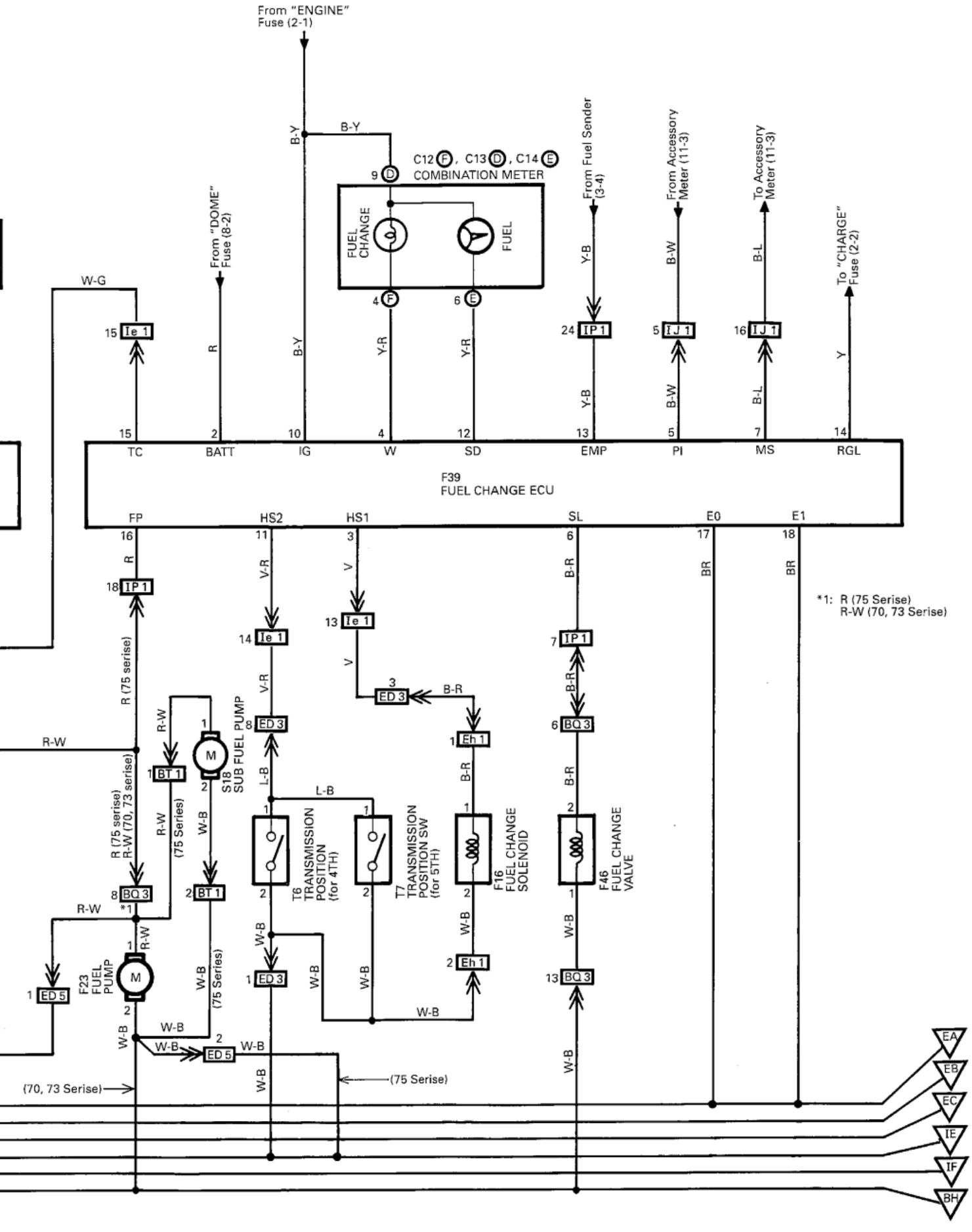
From "ENGINE" Fuse (2-1)
B-Y
C12 (F), C13 (D), C14 (E)
COMBINATION METER
FUEL CHANGE
FUEL
From "DOME" Fuse (8-2)
From Fuel Sender (3-4)
From Accessory Meter (11-3)
To Accessory Meter (11-3)
To "CHARGE" Fuse (2-2)
W-G
Te 1
IP 1
IJ 1
F39
FUEL CHANGE ECU
TC
BATT
IG
W
SD
EMP
PI
MS
RGL
FP
HS2
HS1
SL
E0
E1
*1: R (75 Serise)
R-W (70, 73 Serise)
R (75 serise)
R-W (70, 73 serise)
R-W (75 Series)
W-B (75 Series)
S18 SUB FUEL PUMP
BT 1
ED 3
ED 5
BQ 3
Eh 1
F23 FUEL PUMP
T6 TRANSMISSION POSITION (for 4TH)
T7 TRANSMISSION POSITION SW (for 5TH)
F16 FUEL CHANGE SOLENOID
F46 FUEL CHANGE VALVE
(70, 73 Serise)
(75 Serise)
EA
EB
EC
IE
IF
BH